# THE DATASHEET OF

# IPN65R1K5CEATMA1

www.win-source.net 0086-755-83957316

# MOSFET

## 650V CoolMOS™ CE Power Transistor

CoolMOS™ is a revolutionary technology for high voltage power MOSFETs, designed according to the superjunction (SJ) principle and pioneered by Infineon Technologies. CoolMOS™ CE is a price-performance optimized platform enabling to target cost sensitive applications in Consumer and Lighting markets by still meeting highest efficiency standards. The new series provides all benefits of a fast switching Superjunction MOSFET while not sacrificing ease of use and offering the best cost down performance ratio available on the market.

PG-SOT223

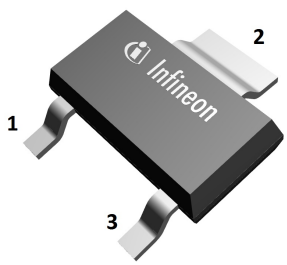


## Features

- Extremely low losses due to very low FOM Rdson*Qg and Eoss
- Very high commutation ruggedness
- Easy to use/drive
- Pb-free plating, Halogen free mold compound
- Qualified for standard grade applications

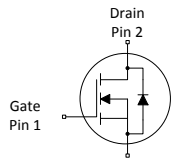


## Applications

Adapter, Charger and Lighting

*Please note: For MOSFET paralleling the use of ferrite beads on the gate or seperate totem poles is generally recommended.*

## Table 1 Key Performance Parameters

| Parameter | Value | Unit |
|---|---|---|
| $V_{DS}$ @ $T_{j,max}$ | 700 | V |
| $R_{DS(on),max}$ | 1.5 | Ω |
| $Q_{g,typ}$ | 10.5 | nC |
| $I_{D,pulse}$ | 9.2 | A |
| $E_{oss}$@400V | 1.2 | µJ |
| Body diode di/dt | 500 | A/µs |

| Type / Ordering Code | Package | Marking | Related Links |
|---|---|---|---|
| IPN65R1K5CE | PG-SOT223 | 65S1K5 | see Appendix A |

## Table of Contents

Description . . . . . 1
Maximum ratings . . . . . 3
Thermal characteristics . . . . . 3
Electrical characteristics . . . . . 4
Electrical characteristics diagrams . . . . . 6
Test Circuits . . . . . 10
Package Outlines . . . . . 11
Appendix A . . . . . 12
Revision History . . . . . 13
Trademarks . . . . . 13
Disclaimer . . . . . 13

# 1 Maximum ratings

at $T_j$ = 25°C, unless otherwise specified

## Table 2 Maximum ratings

| Parameter | Symbol | Values | | | Unit | Note / Test Condition |
|---|---|---|---|---|---|---|
| | | Min. | Typ. | Max. | | |
| Continuous drain current[1] | $I_D$ | -<br>- | -<br>- | 5.2<br>3.3 | A | $T_C$ = 25°C<br>$T_C$ = 100°C |
| Pulsed drain current[2] | $I_{D,pulse}$ | - | - | 9.2 | A | $T_C$ = 25°C |
| Avalanche energy, single pulse | $E_{AS}$ | - | - | 26 | mJ | $I_D$ = 0.6A; $V_{DD}$ = 50V |
| Avalanche energy, repetitive | $E_{AR}$ | - | - | 0.10 | mJ | $I_D$ = 0.6A; $V_{DD}$ = 50V |
| Avalanche current, repetitive | $I_{AR}$ | - | - | 0.6 | A | - |
| MOSFET dv/dt ruggedness | dv/dt | - | - | 50 | V/ns | $V_{DS}$ = 0...480V |
| Gate source voltage | $V_{GS}$ | -20<br>-30 | -<br>- | 20<br>30 | V | static;<br>AC (f>1 Hz) |
| Power dissipation | $P_{tot}$ | - | - | 5.0 | W | $T_C$ = 25°C |
| Operating and storage temperature | $T_j$, $T_{stg}$ | -40 | - | 150 | °C | - |
| Continuous diode forward current | $I_S$ | - | - | 1.2 | A | $T_C$ = 25°C |
| Diode pulse current[2] | $I_{S,pulse}$ | - | - | 9.2 | A | $T_C$ = 25°C |
| Reverse diode dv/dt[3] | dv/dt | - | - | 15 | V/ns | $V_{DS}$ = 0...400V, $I_{SD}$<=$I_S$, $T_j$=25°C |
| Maximum diode commutation speed[3] | $di_f/dt$ | - | - | 500 | A/µs | $V_{DS}$ = 0...400V, $I_{SD}$<=$I_S$, $T_j$=25°C |

# 2 Thermal characteristics

## Table 3 Thermal characteristics

| Parameter | Symbol | Values | | | Unit | Note / Test Condition |
|---|---|---|---|---|---|---|
| | | Min. | Typ. | Max. | | |
| Thermal resistance, junction - solder point | $R_{thJS}$ | - | - | 23.8 | °C/W | - |
| Thermal resistance, junction - ambient for minimal footprint | $R_{thJA}$ | - | - | 160 | °C/W | minimal footprint |
| Thermal resistance, junction - ambient soldered on copper area | $R_{thJA}$ | - | - | 75 | °C/W | Device on 40mm*40mm*1.5 epoxy PCB FR4 with 6cm$^2$ (one layer 70µm thick) copper area for drain connection and cooling. PCB is vertical without blown air. |
| Soldering temperature, wavesoldering only allowed at leads | $T_{sold}$ | - | - | 260 | °C | reflow MSL3 |

[1] DPAK equivalent. Limited by $T_{j\,max}$. Maximum duty cycle D=0.5
[2] Pulse width $t_p$ limited by $T_{j,max}$
[3] $V_{DClink}$=400V; $V_{DS,peak}$<$V_{(BR)DSS}$; identical low side and high side switch with identical $R_G$

# 3 Electrical characteristics

## Table 4 Static characteristics

| Parameter | Symbol | Values | | | Unit | Note / Test Condition |
|---|---|---|---|---|---|---|
| | | Min. | Typ. | Max. | | |
| Drain-source breakdown voltage | $V_{(BR)DSS}$ | 650 | - | - | V | $V_{GS}$=0V, $I_D$=1mA |
| Gate threshold voltage | $V_{GS(th)}$ | 2.50 | 3 | 3.50 | V | $V_{DS}$=$V_{GS}$, $I_D$=0.1mA |
| Zero gate voltage drain current | $I_{DSS}$ | -<br>- | -<br>10 | 1<br>- | µA | $V_{DS}$=650V, $V_{GS}$=0V, $T_j$=25°C<br>$V_{DS}$=650V, $V_{GS}$=0V, $T_j$=150°C |
| Gate-source leakage curent | $I_{GSS}$ | - | - | 100 | nA | $V_{GS}$=20V, $V_{DS}$=0V |
| Drain-source on-state resistance | $R_{DS(on)}$ | -<br>- | 1.35<br>3.51 | 1.50<br>- | Ω | $V_{GS}$=10V, $I_D$=1A, $T_j$=25°C<br>$V_{GS}$=10V, $I_D$=1A, $T_j$=150°C |
| Gate resistance | $R_G$ | - | 6.5 | - | Ω | $f$=1 MHz, open drain |

## Table 5 Dynamic characteristics

| Parameter | Symbol | Values | | | Unit | Note / Test Condition |
|---|---|---|---|---|---|---|
| | | Min. | Typ. | Max. | | |
| Input capacitance | $C_{iss}$ | - | 225 | - | pF | $V_{GS}$=0V, $V_{DS}$=100V, $f$=1MHz |
| Output capacitance | $C_{oss}$ | - | 15 | - | pF | $V_{GS}$=0V, $V_{DS}$=100V, $f$=1MHz |
| Effective output capacitance, energy related[1)] | $C_{o(er)}$ | - | 10 | - | pF | $V_{GS}$=0V, $V_{DS}$=0...480V |
| Effective output capacitance, time related[2)] | $C_{o(tr)}$ | - | 42 | - | pF | $I_D$=constant, $V_{GS}$=0V, $V_{DS}$=0...480V |
| Turn-on delay time | $t_{d(on)}$ | - | 7.7 | - | ns | $V_{DD}$=400V, $V_{GS}$=13V, $I_D$=1.5A, $R_G$=10.2Ω |
| Rise time | $t_r$ | - | 5.9 | - | ns | $V_{DD}$=400V, $V_{GS}$=13V, $I_D$=1.5A, $R_G$=10.2Ω |
| Turn-off delay time | $t_{d(off)}$ | - | 33 | - | ns | $V_{DD}$=400V, $V_{GS}$=13V, $I_D$=1.5A, $R_G$=10.2Ω |
| Fall time | $t_f$ | - | 18.2 | - | ns | $V_{DD}$=400V, $V_{GS}$=13V, $I_D$=1.5A, $R_G$=10.2Ω |

## Table 6 Gate charge characteristics

| Parameter | Symbol | Values | | | Unit | Note / Test Condition |
|---|---|---|---|---|---|---|
| | | Min. | Typ. | Max. | | |
| Gate to source charge | $Q_{gs}$ | - | 1.3 | - | nC | $V_{DD}$=480V, $I_D$=1.5A, $V_{GS}$=0 to 10V |
| Gate to drain charge | $Q_{gd}$ | - | 5.8 | - | nC | $V_{DD}$=480V, $I_D$=1.5A, $V_{GS}$=0 to 10V |
| Gate charge total | $Q_g$ | - | 10.5 | - | nC | $V_{DD}$=480V, $I_D$=1.5A, $V_{GS}$=0 to 10V |
| Gate plateau voltage | $V_{plateau}$ | - | 5.4 | - | V | $V_{DD}$=480V, $I_D$=1.5A, $V_{GS}$=0 to 10V |

[1)] $C_{o(er)}$ is a fixed capacitance that gives the same stored energy as $C_{oss}$ while $V_{DS}$ is rising from 0 to 480V
[2)] $C_{o(tr)}$ is a fixed capacitance that gives the same charging time as $C_{oss}$ while $V_{DS}$ is rising from 0 to 480V

## Table 7 Reverse diode characteristics

| Parameter | Symbol | Values | | | Unit | Note / Test Condition |
|---|---|---|---|---|---|---|
| | | Min. | Typ. | Max. | | |
| Diode forward voltage | $V_{SD}$ | - | 0.9 | - | V | $V_{GS}$=0V, $I_F$=1.5A, $T_f$=25°C |
| Reverse recovery time | $t_{rr}$ | - | 200 | - | ns | $V_R$=400V, $I_F$=1.5A, d$i_F$/d$t$=100A/µs |
| Reverse recovery charge | $Q_{rr}$ | - | 0.9 | - | µC | $V_R$=400V, $I_F$=1.5A, d$i_F$/d$t$=100A/µs |
| Peak reverse recovery current | $I_{rrm}$ | - | 8 | - | A | $V_R$=400V, $I_F$=1.5A, d$i_F$/d$t$=100A/µs |

# 4 Electrical characteristics diagrams

**Diagram 1: Power dissipation**

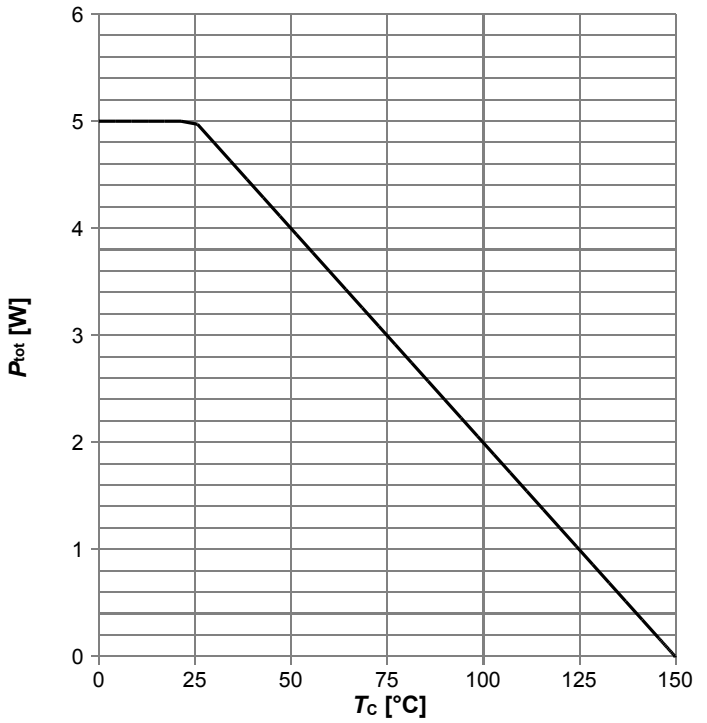


$P_{tot}$=f($T_C$)

**Diagram 2: Safe operating area**

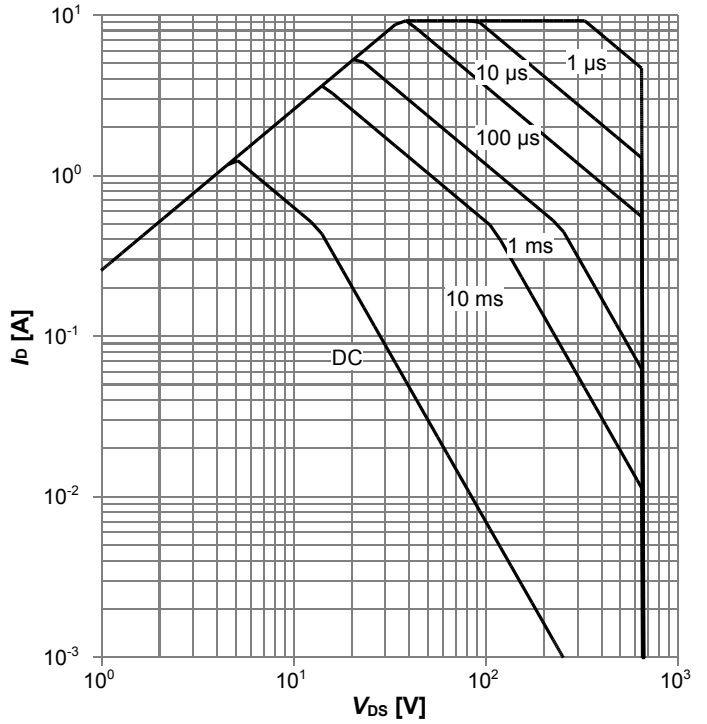


$I_D$=f($V_{DS}$); $T_C$=25 °C; $D$=0; parameter: $t_p$

**Diagram 3: Safe operating area**

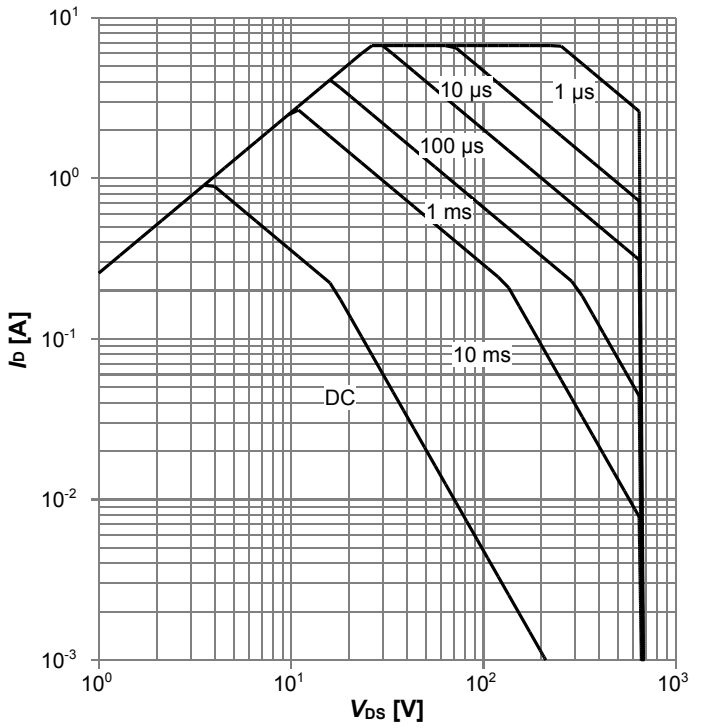


$I_D$=f($V_{DS}$); $T_C$=80 °C; $D$=0; parameter: $t_p$

**Diagram 4: Max. transient thermal impedance**

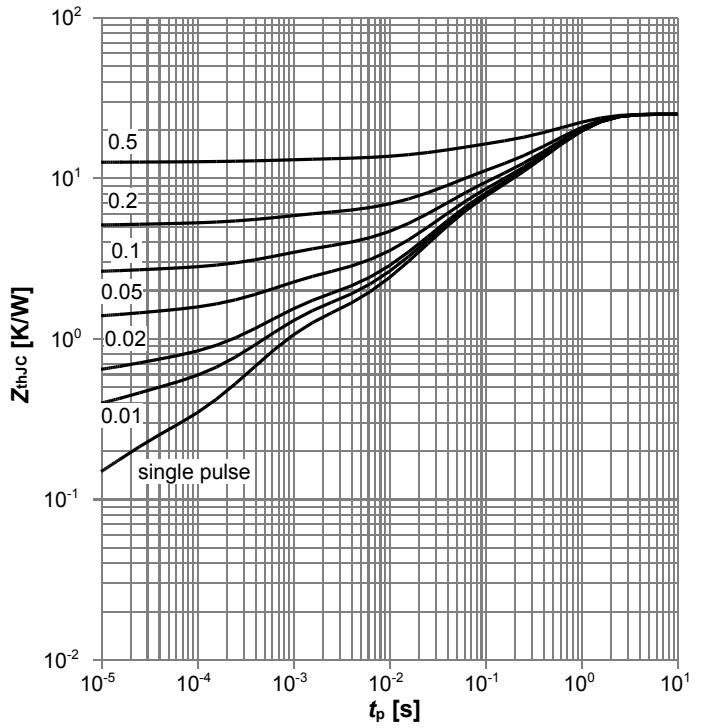


$Z_{thJC}$ =f($t_P$); parameter: $D$=$t_p$/$T$

**Diagram 5: Typ. output characteristics**

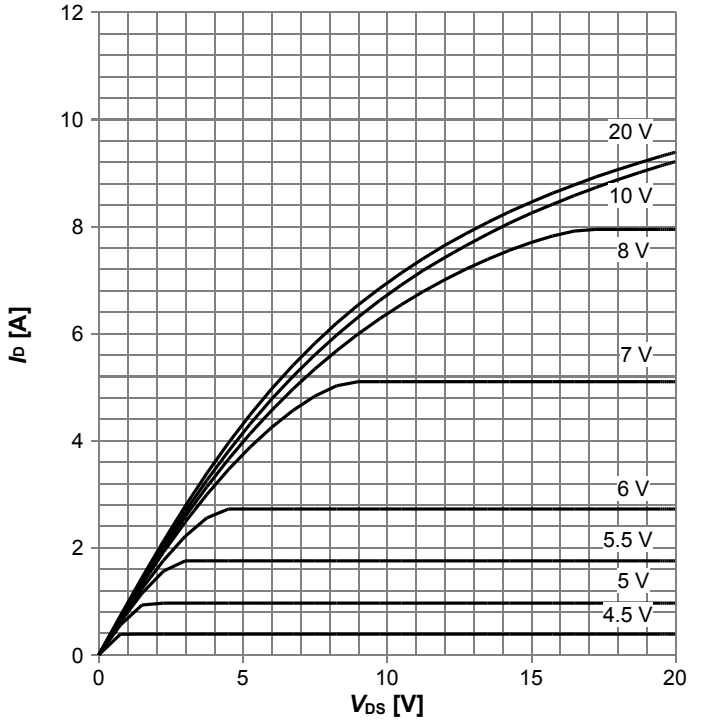


$I_D$=f($V_{DS}$); $T_j$=25 °C; parameter: $V_{GS}$

**Diagram 6: Typ. output characteristics**

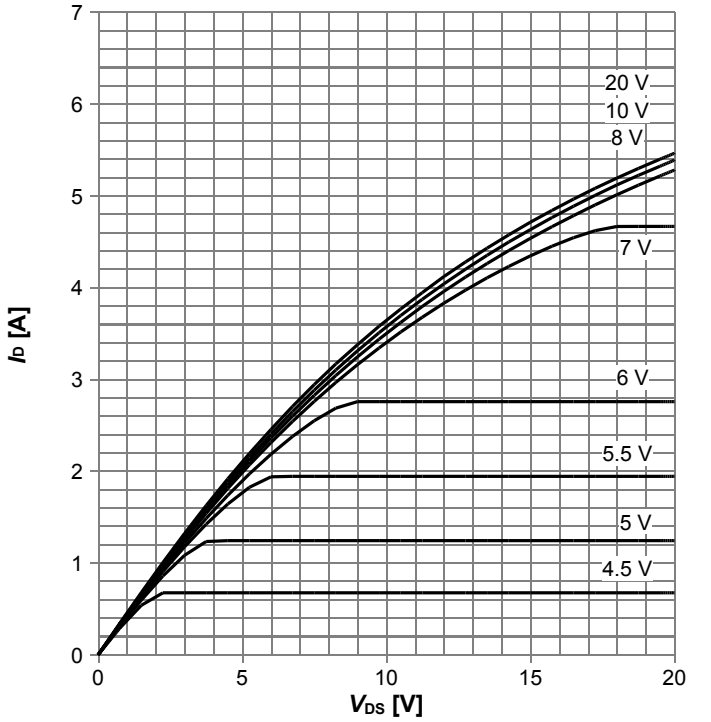


$I_D$=f($V_{DS}$); $T_j$=125 °C; parameter: $V_{GS}$

**Diagram 7: Typ. drain-source on-state resistance**

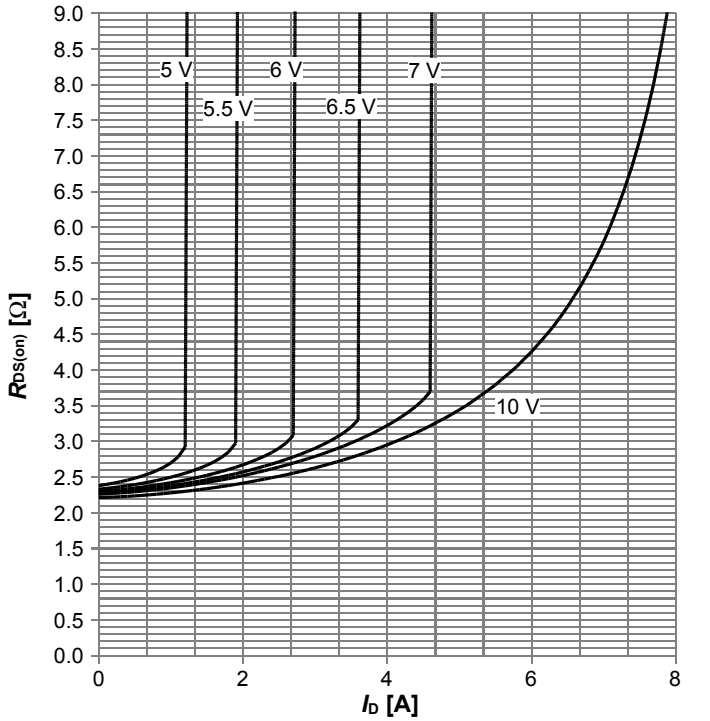


$R_{DS(on)}$=f($I_D$); $T_j$=125 °C; parameter: $V_{GS}$

**Diagram 8: Drain-source on-state resistance**

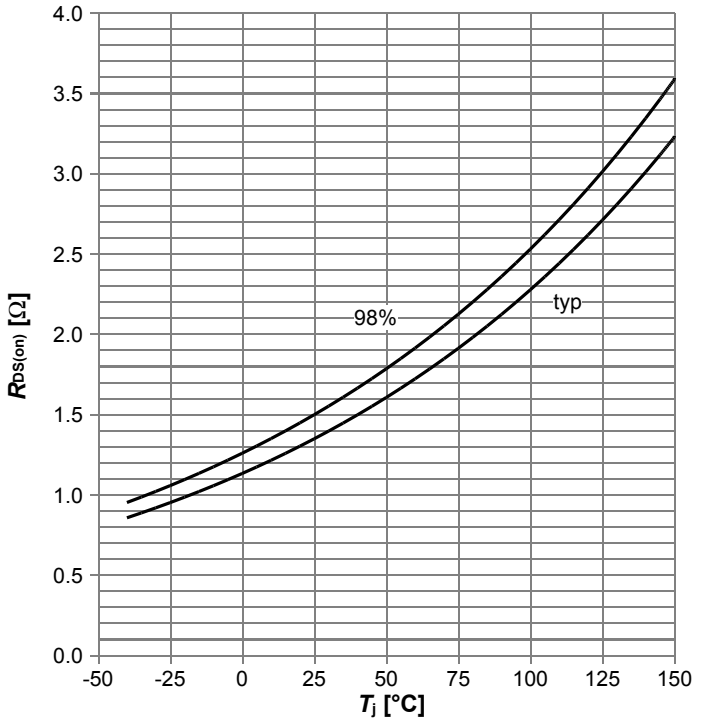


$R_{DS(on)}$=f($T_j$); $I_D$=1.0 A; $V_{GS}$=10 V

**Diagram 9: Typ. transfer characteristics**

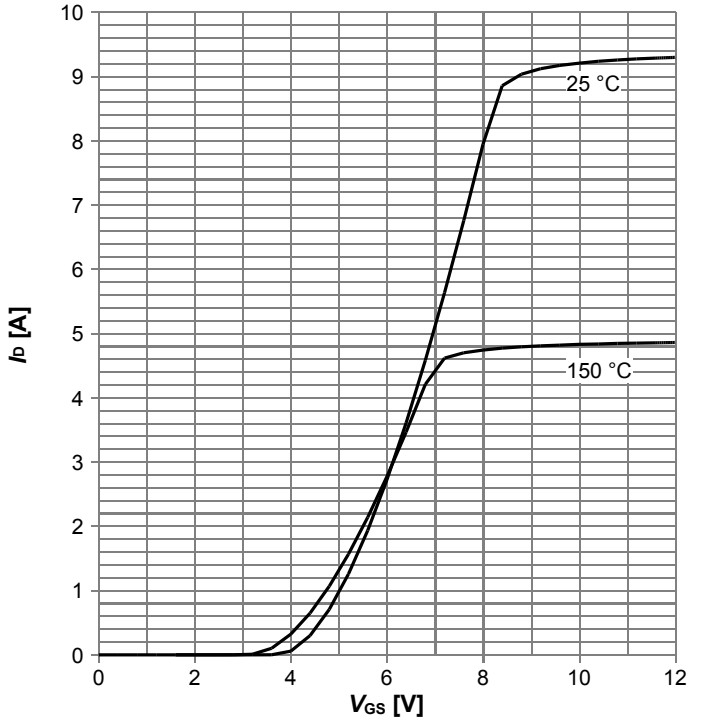


$I_D$=f($V_{GS}$); $V_{DS}$=20V; parameter: $T_j$

**Diagram 10: Typ. gate charge**

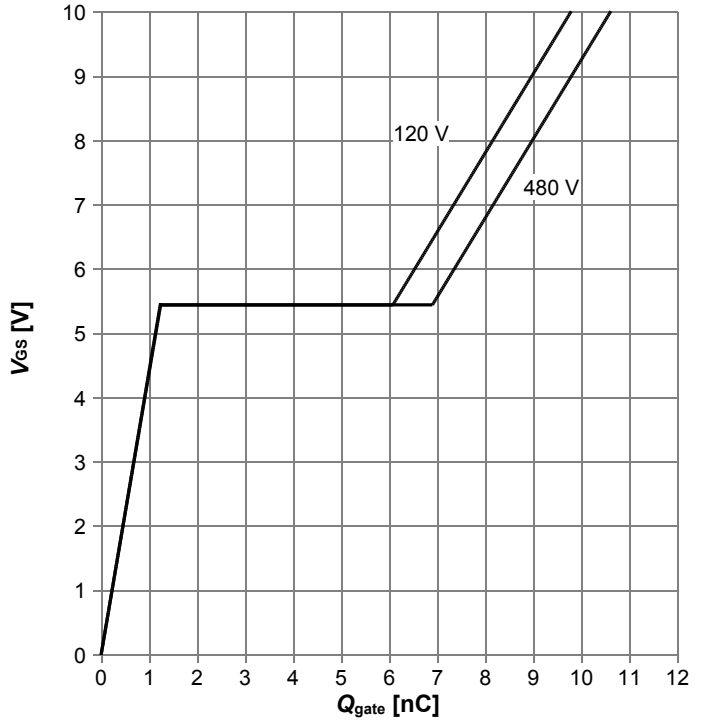


$V_{GS}$=f($Q_{gate}$); $I_D$=1.5 A pulsed; parameter: $V_{DD}$

**Diagram 11: Forward characteristics of reverse diode**

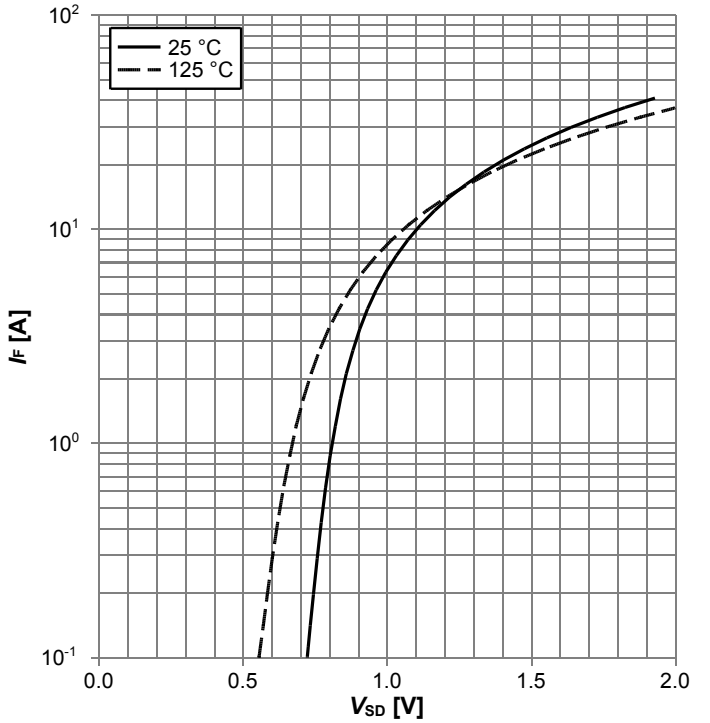


$I_F$=f($V_{SD}$); parameter: $T_j$

**Diagram 12: Avalanche energy**

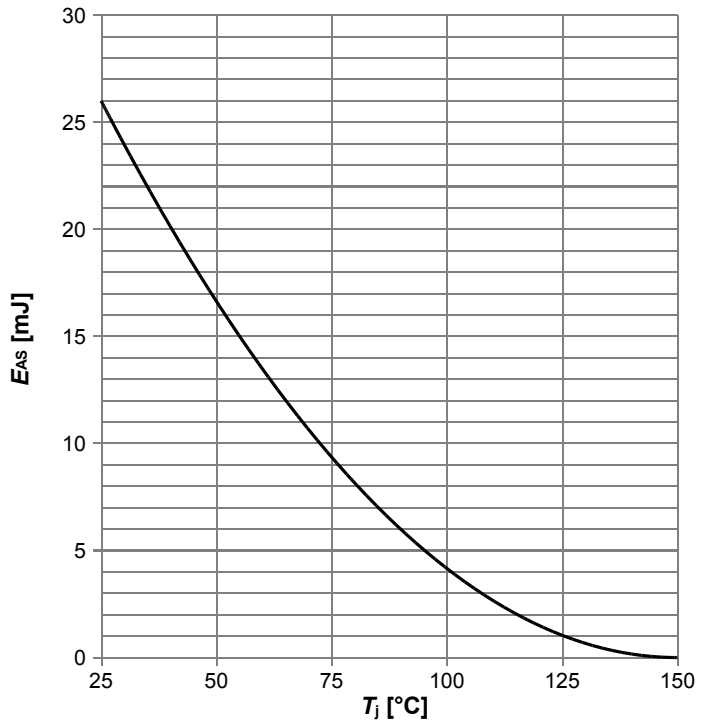


$E_{AS}$=f($T_j$); $I_D$=0.6 A; $V_{DD}$=50 V

**Diagram 13: Drain-source breakdown voltage**

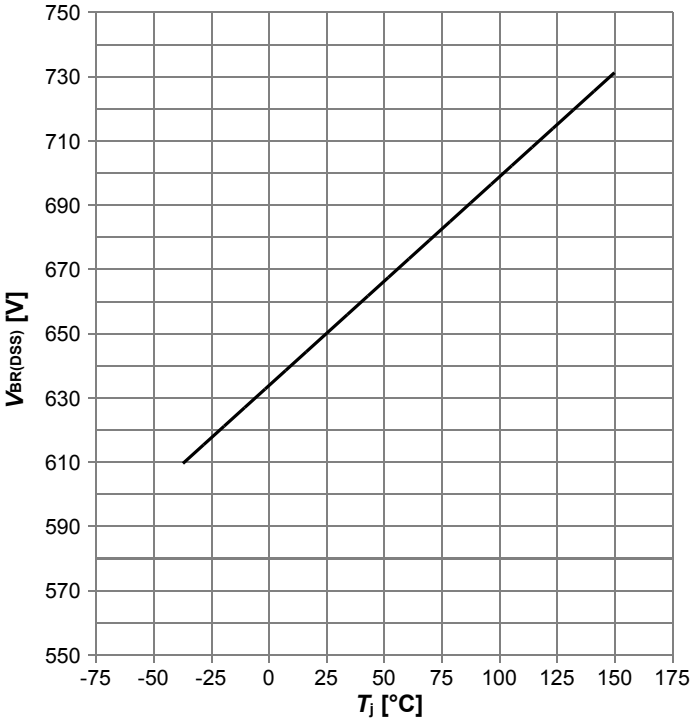


$V_{BR(DSS)}$=f($T_j$); $I_D$=1 mA

**Diagram 14: Typ. capacitances**

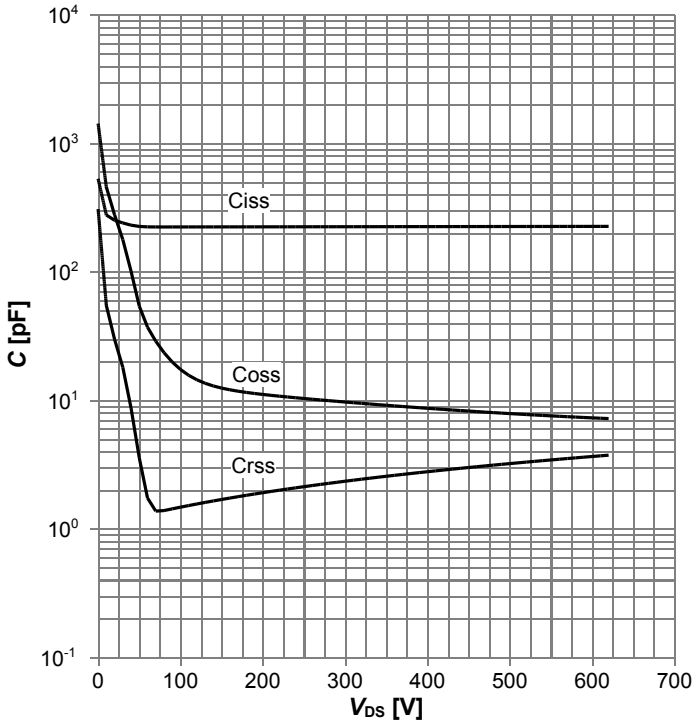


$C$=f($V_{DS}$); $V_{GS}$=0 V; $f$=1 MHz

**Diagram 15: Typ. Coss stored energy**

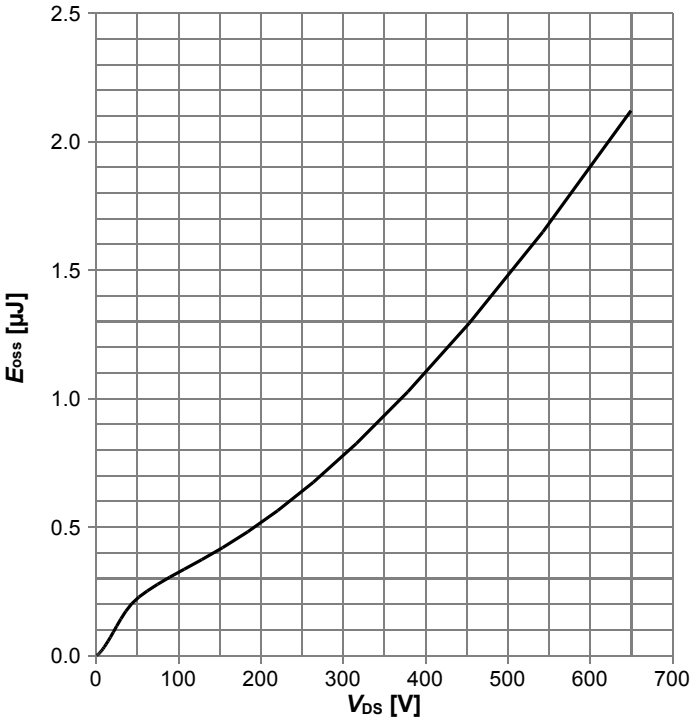


$E_{oss}$=f($V_{DS}$)

# 5 Test Circuits

## Table 8 Diode characteristics

| Test circuit for diode characteristics | Diode recovery waveform |
|---|---|
| 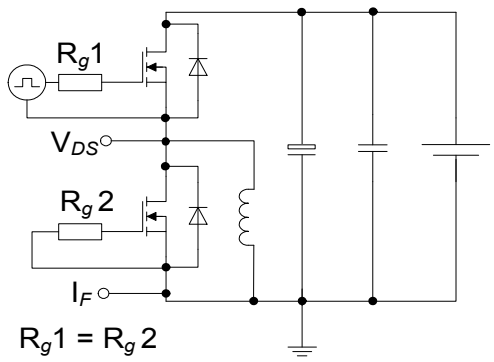  | 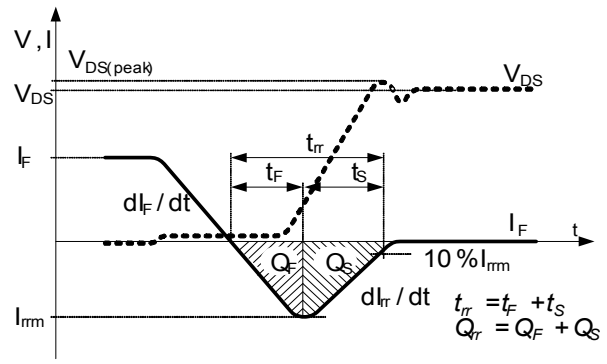  |

## Table 9 Switching times

| Switching times test circuit for inductive load | Switching times waveform |
|---|---|
| 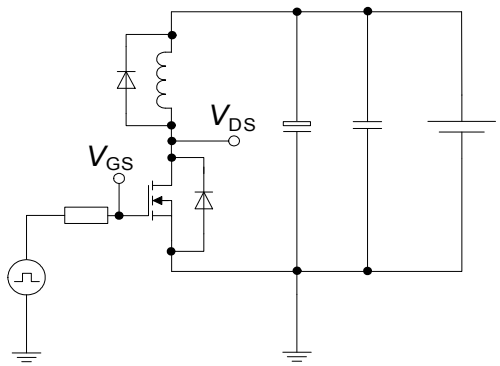  | 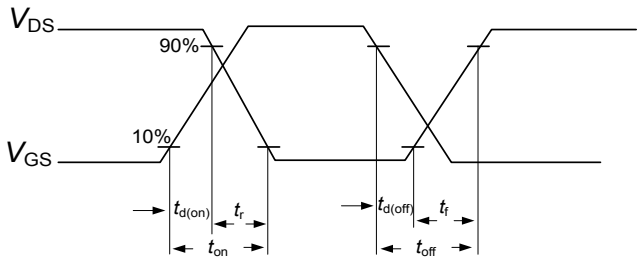  |

## Table 10 Unclamped inductive load

| Unclamped inductive load test circuit | Unclamped inductive waveform |
|---|---|
| 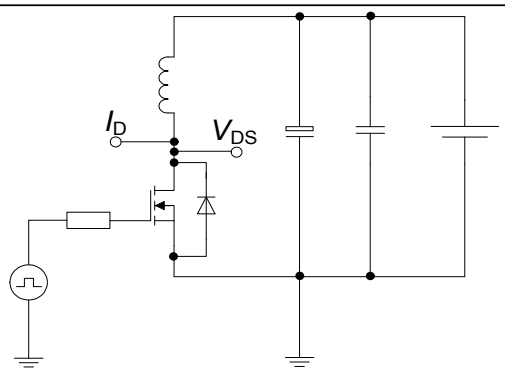  | 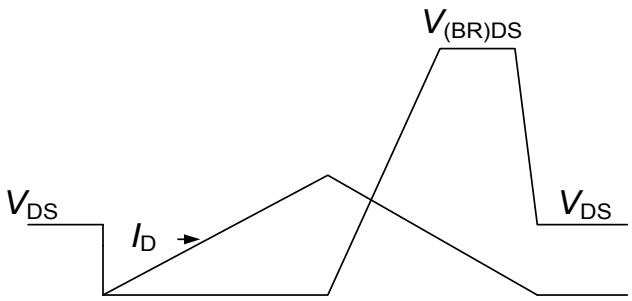  |

# 6 Package Outlines

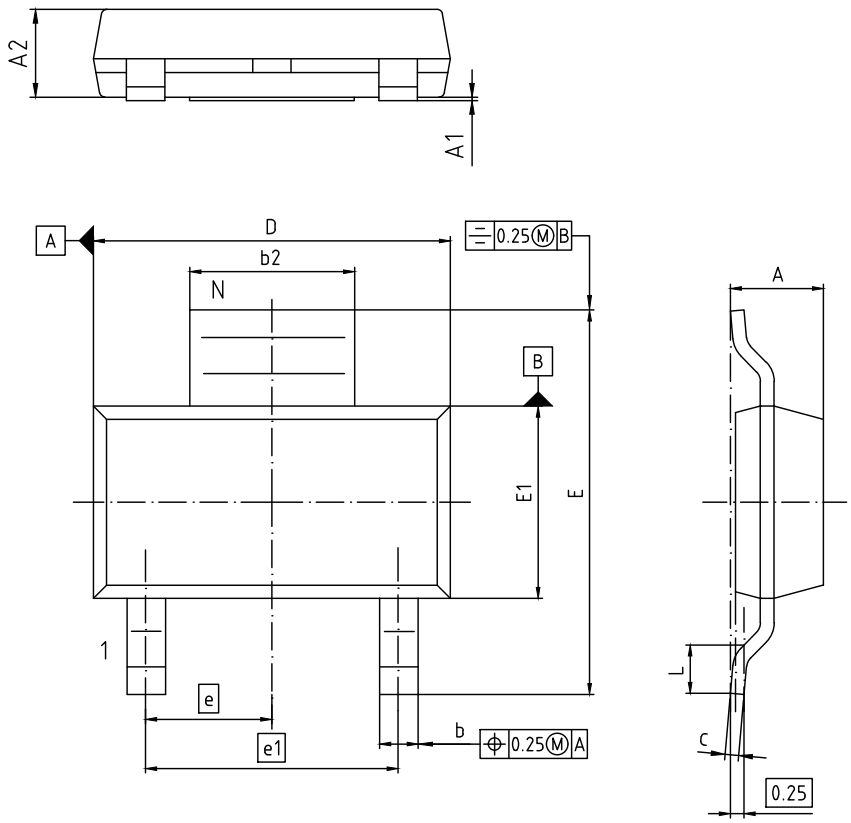


NOTES:

1. ALL DIMENSIONS REFER TO JEDEC STANDARD TO-261

| DIM | MILLIMETERS | | INCHES | |
|---|---|---|---|---|
| | MIN | MAX | MIN | MAX |
| A | 1.52 | 1.80 | 0.060 | 0.071 |
| A1 | - | 0.10 | - | 0.004 |
| A2 | 1,50 | 1.70 | 0.059 | 0.067 |
| b | 0.60 | 0.80 | 0.024 | 0.031 |
| b2 | 2.95 | 3.10 | 0.116 | 0.122 |
| c | 0.24 | 0.32 | 0.009 | 0.013 |
| D | 6.30 | 6.70 | 0.248 | 0.264 |
| E | 6.70 | 7.30 | 0.264 | 0.287 |
| E1 | 3.30 | 3.70 | 0.130 | 0.146 |
| e | 2.3 BASIC | | 0.091 BASIC | |
| e1 | 4.6 BASIC | | 0.181 BASIC | |
| L | 0.75 | 1.10 | 0.030 | 0.043 |
| N | 3 | | 3 | |
| O | 0° | 10° | 0° | 10° |
| | | | | |

DOCUMENT NO.
Z8B00180553

SCALE 0 2.5 0 2.5 5mm

EUROPEAN PROJECTION

ISSUE DATE
24-02-2016

REVISION
01

**Figure 1 Outline PG-SOT223, dimensions in mm/inches**

# 7 Appendix A

## Table 11 Related Links

- **IFX CoolMOS Webpage:** www.infineon.com
- **IFX Design tools:** www.infineon.com

## Revision History

IPN65R1K5CE

**Revision: 2016-04-29, Rev. 2.0**

Previous Revision

| Revision | Date | Subjects (major changes since last revision) |
|---|---|---|
| 2.0 | 2016-04-29 | Release of final version |

**Trademarks of Infineon Technologies AG**

AURIX™, C166™, CanPAK™, CIPOS™, CoolGaN™, CoolMOS™, CoolSET™, CoolSiC™, CORECONTROL™, CROSSAVE™, DAVE™, DI-POL™, DrBlade™, EasyPIM™, EconoBRIDGE™, EconoDUAL™, EconoPACK™, EconoPIM™, EiceDRIVER™, eupec™, FCOS™, HITFET™, HybridPACK™, Infineon™, ISOFACE™, IsoPACK™, i-Wafer™, MIPAQ™, ModSTACK™, my-d™, NovalithIC™, OmniTune™, OPTIGA™, OptiMOS™, ORIGA™, POWERCODE™, PRIMARION™, PrimePACK™, PrimeSTACK™, PROFET™, PRO-SIL™, RASIC™, REAL3™, ReverSave™, SatRIC™, SIEGET™, SIPMOS™, SmartLEWIS™, SOLID FLASH™, SPOC™, TEMPFET™, thinQ!™, TRENCHSTOP™, TriCore™.

Trademarks updated August 2015

**Other Trademarks**

All referenced product or service names and trademarks are the property of their respective owners.

**We Listen to Your Comments**
Any information within this document that you feel is wrong, unclear or missing at all? Your feedback will help us to continuously improve the quality of this document. Please send your proposal (including a reference to this document) to:
**erratum@infineon.com**

**Published by**
**Infineon Technologies AG**
**81726 München, Germany**
**© 2016 Infineon Technologies AG**
**All Rights Reserved.**

**Legal Disclaimer**
The information given in this document shall in no event be regarded as a guarantee of conditions or characteristics. With respect to any examples or hints given herein, any typical values stated herein and/or any information regarding the application of the device, Infineon Technologies hereby disclaims any and all warranties and liabilities of any kind, including without limitation, warranties of non-infringement of intellectual property rights of any third party.

**Information**
For further information on technology, delivery terms and conditions and prices please contact your nearest Infineon Technologies Office (**www.infineon.com**).

**Warnings**
Due to technical requirements, components may contain dangerous substances. For information on the types in question, please contact the nearest Infineon Technologies Office.
The Infineon Technologies component described in this Data Sheet may be used in life-support devices or systems and/or automotive, aviation and aerospace applications or systems only with the express written approval of Infineon Technologies, if a failure of such components can reasonably be expected to cause the failure of that life-support, automotive, aviation and aerospace device or system or to affect the safety or effectiveness of that device or system. Life support devices or systems are intended to be implanted in the human body or to support and/or maintain and sustain and/or protect human life. If they fail, it is reasonable to assume that the health of the user or other persons may be endangered.

## Looking for pricing, stock, or lifecycle information?

Click below to explore more details on WIN SOURCE:

- View IPN65R1K5CEATMA1 on WIN SOURCE
- Infineon Technologies Information

## Optimize Your Supply Chain with WIN SOURCE Solutions

- Global Sourcing Solution
- Obsolete Management
- Cost Control Management
- Shortage Management
- Alternative Solution
- Excess Inventory Management