THE DATASHEET OF

AN8016SHAE1V

www.win-source.net 0086-755-83957316

Product Standards

Part No.	AN8016SH-A
Package Code No.	SSOP010-P-0225A

Analogue LSI Business Unit
Semiconductor Company
Matsushita Electric Industrial Co., Ltd.

Established by	Applied by	Checked by	Prepared by
K.Komichi	M.Hiramatsu	M.Yamanaka	M.Motomori

Contents

■ Overview 3
■ Features 3
■ Applications 3
■ Package 3
■ Type 3
■ Application Circuit Example 4
■ Block Diagram 5
■ Pin Descriptions 6
■ Absolute Maximum Ratings 7
■ Operating Supply Voltage Range 7
■ Recommended Operating Conditions 7
■ Electrical Characteristics 8
■ Electrical Characteristics (Reference values for design) 9
■ Test Circuit Diagram 10
■ Electrical Characteristics Test Procedures 12
■ Technical Data 15

AN8016SH-A

Single-channel 1.8-volt step-up DC-DC converter control IC

■ Overview

AN8016SH-A is a single-channel PWM DC-DC converter control IC that supports low-voltage operation.

This IC allows a stepped-up voltage output to be provided with a minimal number of external components. It features a low minimum operating voltage of 1.8 V, and due to being provided in a 10 pin surface mount package with a 0.5 mm lead pitch, is optimal for use in miniature high-efficiency power supplies for portable equipment.

■ Features

- Wide operating supply voltage range : 1.8 V to 14 V
- High-precision reference voltage circuit : 1.27 V (allowance : ±3%)
- Supports control over a wide output frequency range : 20 kHz to 1 MHz
- Provides a fixed output current with minimal supply voltage fluctuations by using an external resistor to set the output current with a totem pole structure in the output block.
- Large maximum output current of ±50 mA
- Timer latch short-circuit protection circuit (charge current : 1.3 μA typical)
- Low input voltage malfunction prevention circuit (U.V.L.O.) (circuit operation start voltage : 1.6 V typical)
- On/off control function (active-high, standby current : 5 μA maximum)
- Fixed maximum duty ratio with small sample-to sample variations (80% ±5%)
- Adjustable soft start time provided by using separate DTC and S.C.P. pins.

■ Applications

- LCD displays, digital still cameras, PDAs

■ Package

- 10 pin Plastic Shrink Small Outline Package (SSOP Type)

■ Type

- Silicon monolithic bipolar IC

■ Application Circuit Example

Chopper Type Step-up Circuit

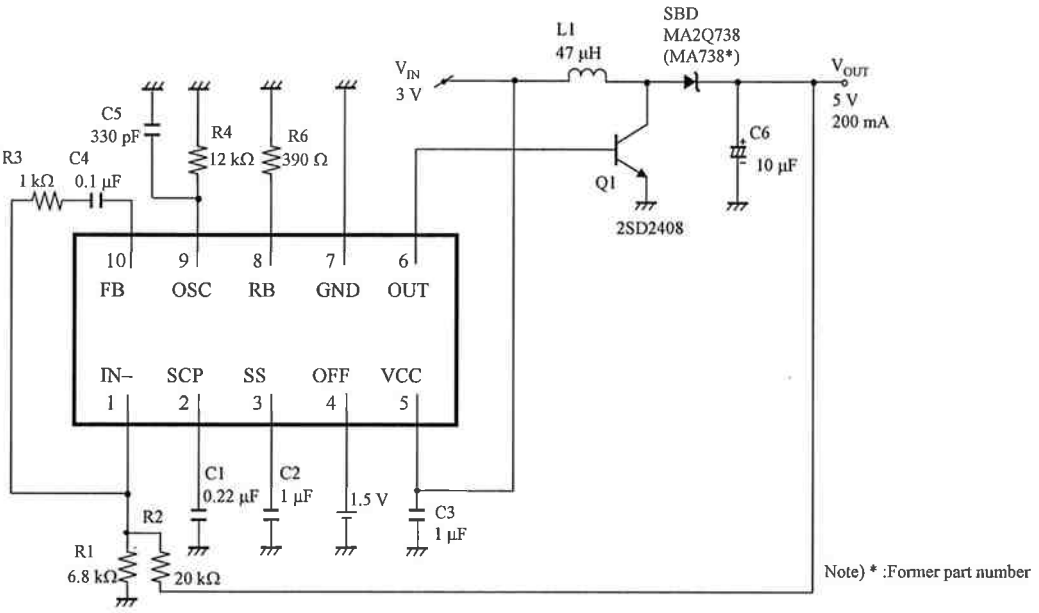

Notes) When you design printed circuit board pattern layout, consider the following in order to achieve low noise and high efficiency.

1. Use extremely wide lines for the ground lines, and isolate the IC ground from the power system ground.
2. Position the input filter capacitor C3 as close as possible to the V_{CC} pin and the GND pin so that the internal circuit of the IC will not be affected by the switching noise.
3. The wiring length between the OUT pin and the switching elements (i.e., transistor and MOSFET) must be as short as possible in order to obtain fine switching waveforms.
4. The lead wire on the low impedance side of the output voltage detecting resistor R2 must be longer than the other side.

■ Block Diagram

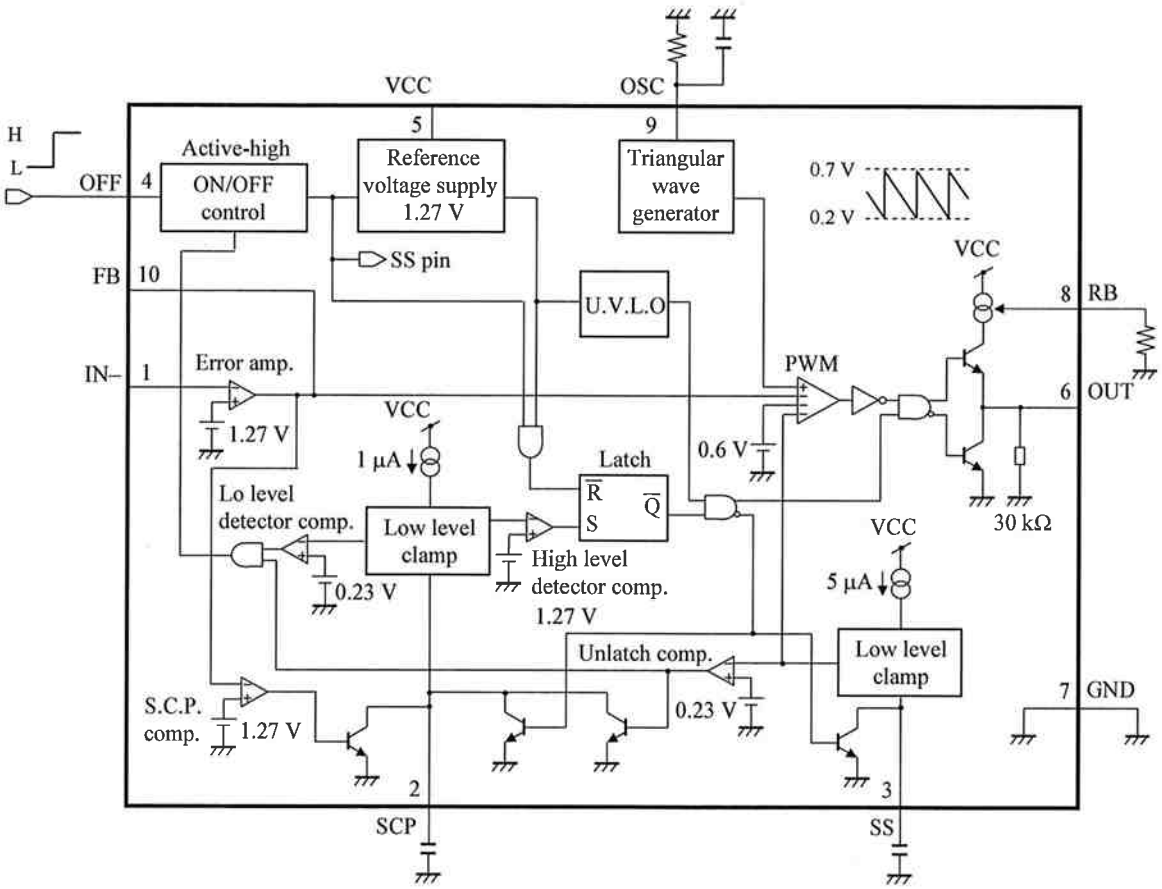

■ Pin Descriptions

Pin No.	Pin name	Type	Description
1	IN–	Input	Error amplifier inverting input
2	SCP	—	Time constant capacitor connection for short-circuit protection
3	SS	—	Soft-start time-constant capacitor connection
4	OFF	Input	ON/off control
5	VCC	Power supply	Supply voltage
6	OUT	Output	Push-pull output
7	GND	Ground	Ground
8	RB	Output	Output-current setting resistor connection pin
9	OSC	—	Oscillator circuit timing resistor/capacitor connection pin
10	FB	Output	Error amplifier output

■ Absolute Maximum Ratings

A No.	Parameter	Symbol	Rating	Unit	Notes
1	Supply voltage	V_{CC}	15	V	*1
2	Supply current	I_{CC}	—	mA	—
3	Power dissipation	P_D	186	mW	*2
4	Operating ambient temperature	T_{opr}	−30 to +85	°C	*3
5	Storage temperature	T_{stg}	−55 to +150	°C	*3
6	OFF pin allowable application voltage	V_{OFF}	15	V	—
7	IN− pin allowable application voltage	V_{IN-}	V_{CC}	V	—
8	OUT pin allowable application voltage	V_{OUT}	15	V	—
9	Output source current	$I_{SO(OUT)}$	−50	mA	—
10	Output sink current	$I_{SI(OUT)}$	+50	mA	—

Notes) *1: The values under the condition not exceeding the above absolute maximum ratings and the power dissipation.
*2: The power dissipation shown is the value at T_a = 85°C for the independent (unmounted) IC package.
When using this IC, refer to the P_D-T_a diagram of the package standard page 4 and use under the condition not exceeding the allowable value.
*3: Except for the power dissipation, operating ambient temperature, and storage temperature, all ratings are for T_a = 25°C.

■ Operating supply voltage range

Parameter	Symbol	Range	Unit	Notes
Supply voltage range	V_{CC}	1.8 to 14	V	*

Note) *: The values under the condition not exceeding the above absolute maximum ratings and the power dissipation.

■ Recommended Operating Conditions

Parameter	Symbol	min	max	Unit	Notes
OFF control pin voltage	V_{OFF}	0	14	V	*
Output source current	$I_{SO(OUT)}$	−40	—	mA	*
Output sink current	$I_{SI(OUT)}$	—	40	mA	*
Timing resistance	R_T	3	30	kΩ	*
Timing capacitance	C_T	100	10 000	pF	*
Oscillator frequency	f_{OUT}	20	1 000	kHz	*
Short-circuit protection time constant setting capacitance	C_{SCP}	1 000	—	pF	*
Output current setting resistance	R_B	180	1 100	Ω	*

Note) *: Do not apply current or voltage from external source to any pin not listed above.
In the circuit current, (+) means the current flowing into IC and (−) means the current flowing out of IC.

■ Electrical Characteristics at V_{CC} = 2.4 V

Note) T_a = 25°C±2°C unless otherwise specified.

B No.	Parameter	Symbol	Test circuits	Conditions	Limits			Unit	Notes
					Min	Typ	Max		
U.V.L.O Block									
1	Circuit operation start voltage	V_{UON}	1	—	1.45	1.6	1.75	V	—
Error Amplifier Block									
2	Input threshold voltage	V_{TH}	1	Voltage follower	1.23	1.27	1.31	V	—
3	Line regulation	V_{dV}	1	V_{CC} = 1.8 V to 14 V	—	1.0	10	mV	—
4	Input bias current	I_B	2	—	—	0.2	1.0	μA	—
5	High-level output voltage	V_{EH}	2	—	1.85	2.0	2.15	V	—
6	Low-level output voltage	V_{EL}	2	—	—	—	0.2	V	—
PWM Comparator Block									
7	Output source current	I_{SS}	5	V_{SS} = 0.5 V	–3.5	–5	–6.5	μA	—
Output Block									
8	Oscillator frequency	f_{OUT}	3	R_T = 12 kΩ, C_T = 330 pF	170	190	210	kHz	—
9	Maximum duty	D_{MAX}	3	—	75	80	85	%	—
10	High-level output voltage	V_{OH}	4	I_O = –15 mA, R_B = 390 Ω	1.4	—	—	V	—
11	Low-level output voltage	V_{OL}	4	I_O = 10 mA, R_B = 390 Ω	—	—	0.2	V	—
12	Output source current	$I_{SO(OUT)}$	4	V_O = 0.9 V, R_B = 390 Ω	–40	–30	–20	mA	—
13	Output sink current	$I_{SI(OUT)}$	4	V_O = 0.3 V, R_B = 390 Ω	20	—	—	mA	—
14	Pull-down resistor	R_O	4	—	20	30	40	kΩ	—
Unlatch Circuit Block									
15	Input threshold voltage	V_{THUL}	5	—	0.13	0.20	0.27	V	—
Short-circuit Protection Circuit Block									
16	Input threshold voltage	V_{THPC}	6	—	1.17	1.27	1.37	V	—
17	Input standby voltage	V_{STBY}	6	—	—	60	120	mV	—
18	Input latch voltage	V_{IN}	6	—	—	40	120	mV	—
19	Charge current	I_{CHG}	5	V_{SCP} = 0.5 V	–1.65	–1.3	– 0.95	μA	—
ON/OFF Control Block									
20	Input threshold voltage	$V_{ON(TH)}$	7	—	0.8	1.0	1.3	V	—
21	OFF mode SS pin voltage	$V_{OFF(SS)}$	7	—	0.13	—	0.27	V	—
22	OFF mode S.C.P. pin voltage	$V_{OFF(SCP)}$	7	—	0.13	—	0.27	V	—
Whole Device									
23	Average consumption current	$I_{CC(AV)}$	1	R_B = 390 Ω, Duty ratio = 50%	—	4.4	7.0	mA	—
24	Latch mode consumption current	$I_{CC(LA)}$	1	R_B = 390 Ω	—	1.5	2.4	mA	—
25	Standby mode current	$I_{CC(SB)}$	1	—	—	—	5	μA	—

■ Electrical Characteristics (Reference values for design) at V_{CC} = 2.4 V

Note) T_a = 25°C±2°C unless otherwise specified.

B No.	Parameter	Symbol	Test circuits	Conditions	Reference values			Unit	Notes
					Min	Typ	Max		
U.V.L.O Block									
26	Reset voltage	V_R	—	—	—	0.8	—	V	*1
Error Amplifier Block									
27	V_{TH} temperature characteristics	V_{THdT}	2	T_a = –40°C to 85°C	—	±0.5	—	%	*1
28	Output source current	$I_{SO(FB)}$	2	V_{FB} = 0.5 V	—	–40	—	μA	*1
29	Output sink current	$I_{SI(FB)}$	2	V_{FB} = 0.5 V	—	2	—	mA	*1
30	Open-loop gain	A_V	2	—	—	70	—	dB	*1
PWM Comparator Block									
31	SS pin voltage	V_{SS}	5	—	—	1.22	—	V	*1
Output Block									
32	RB pin voltage	V_{RB}	5	R_B = 390 Ω	—	0.32	—	V	*1
33	Oscillator frequency supply voltage characteristics	f_{dV}	3	V_{CC} = 1.8 V to 14 V	—	±1	—	%	*1
34	Oscillator frequency temperature characteristics	f_{dT}	3	T_a = –30°C to 85°C	—	±3	—	%	*1
Short-circuit Protection Circuit Block									
35	Comparator threshold voltage	V_{THL}	6	—	—	1.27	—	V	*1
ON/OFF Control Block									
36	ON/OFF pin current	I_{OFF}	1	V_{OFF} = 1.5 V	—	23	—	μA	*1

Note) *1: The above characteristics are reference values for design of the IC and are not guaranteed by inspection.
If a problem does occur related to these characteristics, Matsushita will respond in good faith to user concerns.

■ Test Circuit Diagram

1. Test Circuit 1

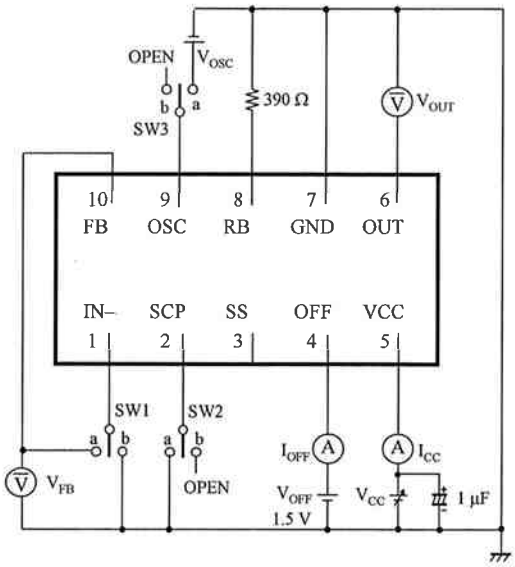

2. Test Circuit 2

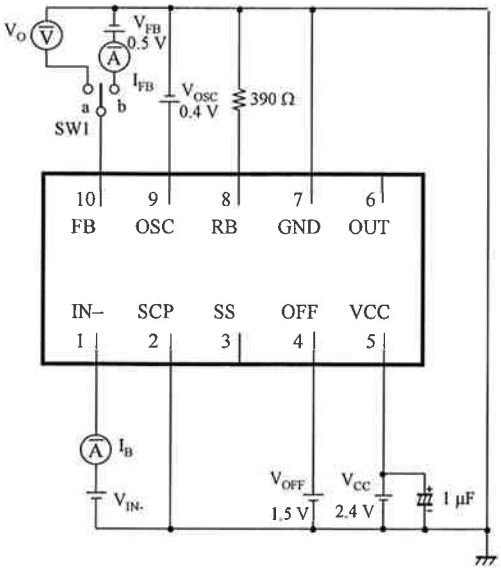

3. Test Circuit 3

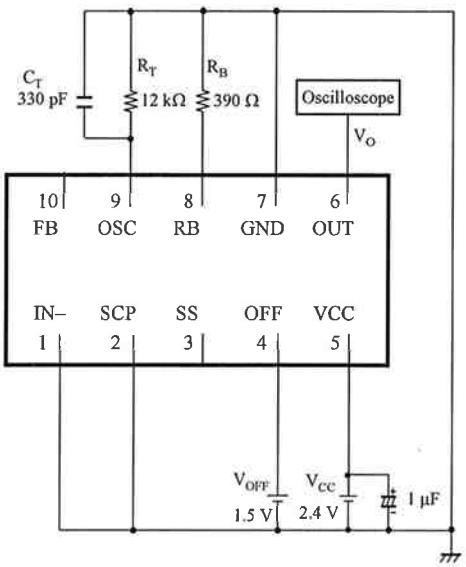

4. Test Circuit 4

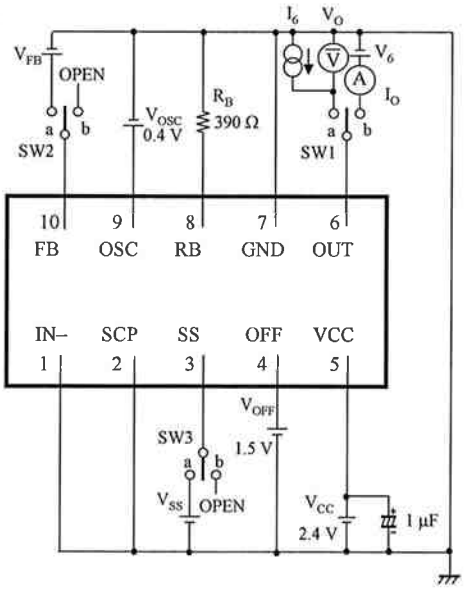

■ Test Circuit Diagram (continued)

5. Test Circuit 5

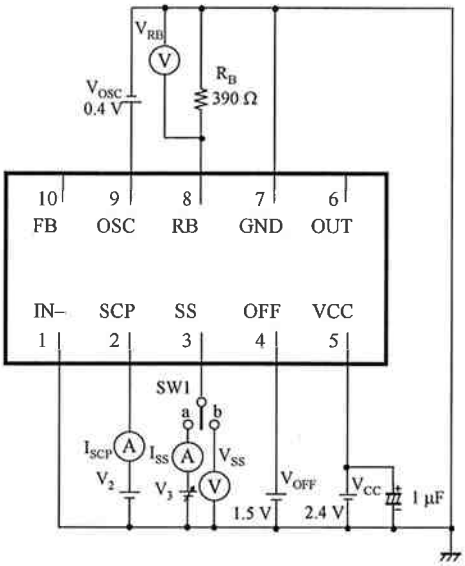

6. Test Circuit 6

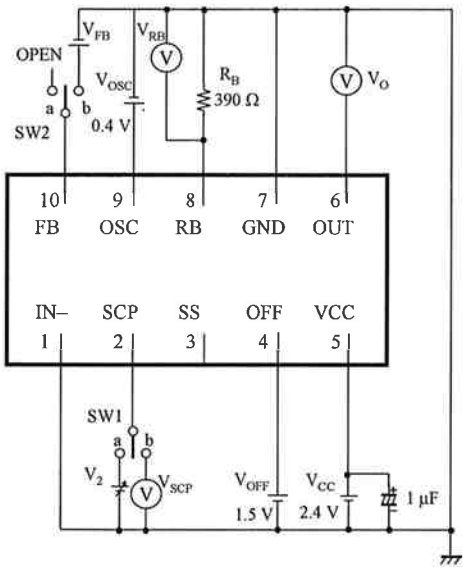

7. Test Circuit 7

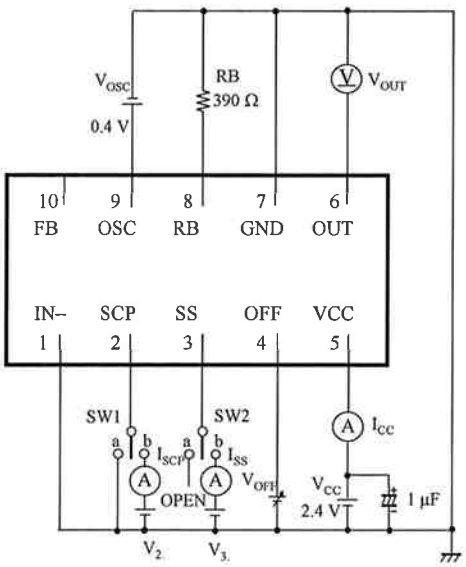

■ Electrical Characteristics Test Procedures

1. Test Circuit 1

C No.	Parameter	SW 1	SW 2	SW 3	Conditions	Measurement
1	Circuit operation start voltage	b	a	a	V_{CC} = variable, V_{OFF} = 1.5 V, V_{OSC} = 0.4 V	Measure the V_{CC} voltage when the V_{OUT} changes from Low to High level while increasing the V_{CC} voltage gradually.
2	Input threshold voltage	a	a	a	V_{CC} = 2.4 V, V_{OFF} = 1.5 V, V_{OSC} = 0.4 V	Measure the voltage of V_{FB}.
3	Line regulation	a	a	a	V_{CC} = variable, V_{OFF} = 1.5 V, V_{OSC} = 0.4 V	Measure V_{dv} which is the amount of change in V_{FB} when changing V_{CC} from 1.8 V to 14 V.
23	Average consumption current	b	a	a	V_{CC} = 2.4 V, V_{OFF} = 1.5 V, V_{OSC} = variable	Measure $I_{CC} = I_{CC}1$ at V_{OSC} = 0.8 V and $I_{CC} = I_{CC}2$ at V_{OSC} = 0.4 V. And then, calculate the equation ; $I_{CC}(AV) = (I_{CC}1 + I_{CC}2) / 2$.
36	ON/OFF pin current	b	a	a	V_{CC} = 2.4 V, V_{OFF} = 1.5 V, V_{OSC} = 0.4 V	Measure the current of I_{OFF} .
24	Latch mode consumption current	b	b	b	V_{CC} = 2.4 V, V_{OFF} = 1.5 V	Measure the current of I_{CC} .
25	Standby mode current	b	b	b	V_{CC} = 2.4 V, V_{OFF} = 0 V	Measure the current of I_{CC} .

2. Test Circuit 2

C No.	Parameter	SW 1	Conditions	Measurement
4	Input bias current	a	V_{CC} = 2.4 V, V_{OFF} = 1.5 V, V_{IN-} = 1.5 V, V_{OSC} = 0.4 V	Measure the current of I_B .
5	High-level output voltage	a	V_{CC} = 2.4 V, V_{OFF} = 1.5 V, V_{IN-} = 1.0 V, V_{OSC} = 0.4 V	Measure the voltage of V_O .
6	Low-level output voltage	a	V_{CC} = 2.4 V, V_{OFF} = 1.5 V, V_{IN-} = 1.5 V, V_{OSC} = 0.4 V	Measure the voltage of V_O .
28	Output source current	b	V_{CC} = 2.4 V, V_{OFF} = 1.5 V, V_{IN-} = 1.0 V, V_{OSC} = 0.4 V, V_{FB} = 0.5 V	Measure the current of I_{FB} .
29	Output sink current	b	V_{CC} = 2.4 V, V_{OFF} = 1.5 V, V_{IN-} = 1.5 V, V_{OSC} = 0.4 V, V_{FB} = 0.5 V	Measure the current of I_{FB} .
30	Open-loop gain	a	V_{CC} = 2.4 V, V_{OFF} = 1.5 V, V_{IN-} = variable, V_{OSC} = 0.4 V	$A_V = 20\log_{10} \frac{V_{EH} - V_{EL}}{\Delta V_{IN-}}$ [dB] 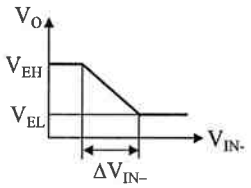

■ Electrical Characteristics Test Procedures (continued)

3. Test Circuit 3

C No.	Parameter	Conditions	Measurement
8	Oscillator frequency	$V_{CC} = 2.4$ V, $V_{OFF} = 1.5$ V	Oscilloscope waveform 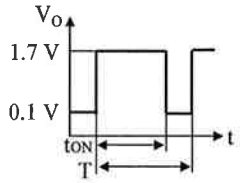 $f_{OUT} = \frac{1}{T}$ [Hz]
9	Maximum duty	$V_{CC} = 2.4$ V, $V_{OFF} = 1.5$ V	$D_{MAX} = \frac{t_{ON}}{T} \times 100$ [%]

4. Test Circuit 4

C No.	Parameter	SW			Conditions	Measurement
		1	2	3		
10	High-level output voltage	a	a	b	$V_{CC} = 2.4$ V, $V_{OFF} = 1.5$ V, $V_{OSC} = 0.4$ V, $V_{FB} = 0.5$ V, $I_6 = -15$ mA	Measure the voltage of V_O .
11	Low-level output voltage	a	a	b	$V_{CC} = 2.4$ V, $V_{OFF} = 1.5$ V, $V_{OSC} = 0.4$ V, $V_{FB} = 0.3$ V, $I_6 = 10$ mA	Measure the voltage of V_O .
12	Output source current	b	b	a	$V_{CC} = 2.4$ V, $V_{OFF} = 1.5$ V, $V_{OSC} = 0.4$ V, $V_{SS} = 0.5$ V, $V_6 = 0.9$ V	Measure the current of I_O .
13	Output sink current	b	b	a	$V_{CC} = 2.4$ V, $V_{OFF} = 1.5$ V, $V_{OSC} = 0.4$ V, $V_{SS} = 0.3$ V, $V_6 = 0.3$ V	Measure the current of I_O .
14	Pull-down resistor	b	—	—	$V_6 = 0.3$ V	$R_O = \frac{0.3}{I_O}$

■ Electrical Characteristics Test Procedures (continued)

5. Test Circuit 5

C No.	Parameter	SW 1	Conditions	Measurement
7	Output source current	a	V_{CC} = 2.4 V, V_{OFF} = 1.5 V, V_{OSC} = 0.4 V, V_2 = V_3 = 0.5 V	Measure the current of I_{SS} .
19	Charge current	a	V_{CC} = 2.4 V, V_{OFF} = 1.5 V, V_{OSC} = 0.4 V, V_2 = V_3 = 0.5 V	Measure the current of I_{SCP} .
15	Input threshold voltage	a	V_{CC} = 2.4 V, V_{OFF} = 1.5 V, V_{OSC} = 0.4 V, V_2 = 0.5 V, V_3 = variable	Measure the V_3 voltage when the I_{SCP} changes from sink current to source current while increasing the V_3 voltage gradually.
31	SS pin voltage	b	V_{CC} = 2.4 V, V_{OFF} = 1.5 V, V_{OSC} = 0.4 V, V_2 = 0 V	Measure the voltage of V_{SS} .
32	RB pin voltage	b	V_{CC} = 2.4 V, V_{OFF} = 1.5 V, V_{OSC} = 0.4 V, V_2 = 0 V	Measure the voltage of V_{RB} .

6. Test Circuit 6

C No.	Parameter	SW 1	SW 2	Conditions	Measurement
16	Input threshold voltage	a	a	V_{CC} = 2.4 V, V_{OFF} = 1.5 V, V_{OSC} = 0.4 V, V_2 = variable	Measure the V_2 voltage when the V_O changes from High to Low level while increasing the V_2 voltage gradually.
17	Input standby voltage	b	b	V_{CC} = 2.4 V, V_{OFF} = 1.5 V, V_{OSC} = 0.4 V, V_{FB} = 0.5 V	Confirm that V_{RB} is 0.2 V or more. Then measure V_{SCP}.
18	Input latch voltage	b	a	V_{CC} = 2.4 V, V_{OFF} = 1.5 V, V_{OSC} = 0.4 V	Confirm that V_{RB} is 0.2 V or less. Then measure V_{SCP}.
35	Comparator threshold voltage	b	b	V_{CC} = 2.4 V, V_{OFF} = 1.5 V, V_{OSC} = 0.4 V, V_{FB} = variable	Measure the V_{FB} voltage when the V_O changes from High to Low level while increasing the V_{FB} voltage gradually.

7. Test Circuit 7

C No.	Parameter	SW 1	SW 2	Conditions	Measurement
20	Input threshold voltage	a	a	V_{CC} = 2.4 V, V_{OSC} = 0.4 V, V_{OFF} = variable	Measure the V_{OFF} voltage when the V_{OUT} changes from Low to High level while increasing the V_{OFF} voltage gradually.
21	OFF mode SS pin voltage	b	b	V_{CC} = 2.4 V, V_{OSC} = 0.4 V, V_{OFF} = 1.5 V, V_2 = V_3 = 0.3 V	Confirm that sink current flows to I_{SCP} and I_{SS} when decreasing V_{OFF} from 1.5 V to 0 V. Then, set V_2 to 0 V, decreasing V_3 gradually, and measure V_3 = $V_{OFF(SS)}$ at I_{CC} = 0.
22	OFF mode S.C.P. pin voltage	b	b	V_{CC} = 2.4 V, V_{OSC} = 0.4 V, V_{OFF} = 1.5 V, V_2 = V_3 = 0.3 V	Confirm that sink current flows to I_{SCP} and I_{SS} when decreasing V_{OFF} from 1.5 V to 0 V. Then, set V_3 to 0 V, decreasing V_2 gradually, and measure V_3 = $V_{OFF(SS)}$ at I_{CC} = 0.

■ Technical Data

- Timing charts (internal waveforms)

1. PWM comparator operating waveforms

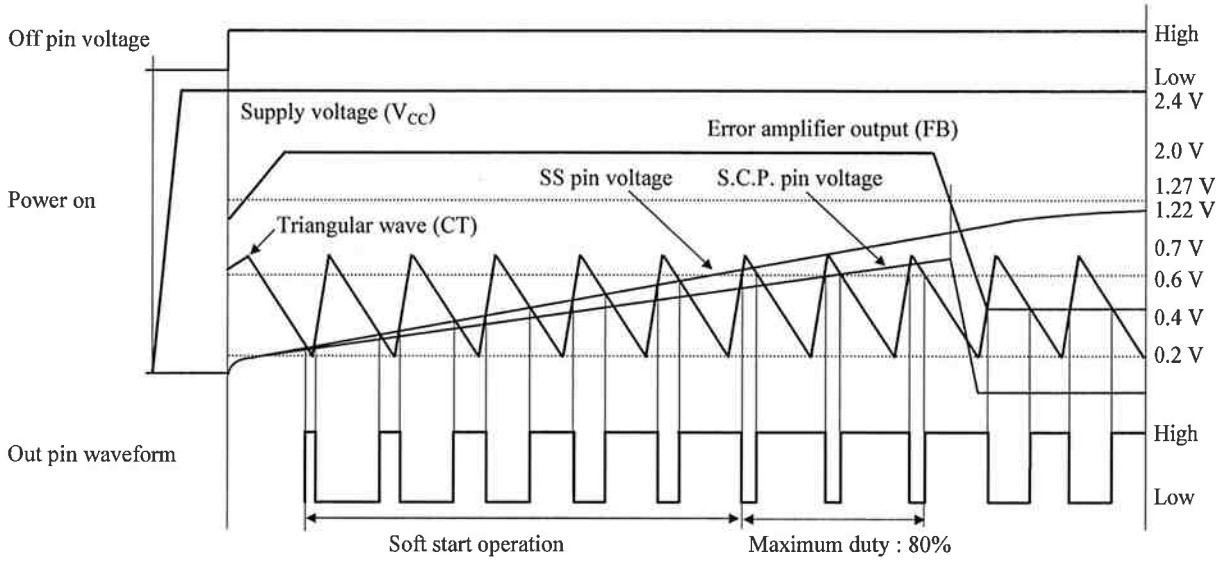

2. Short-circuit protection operating waveforms

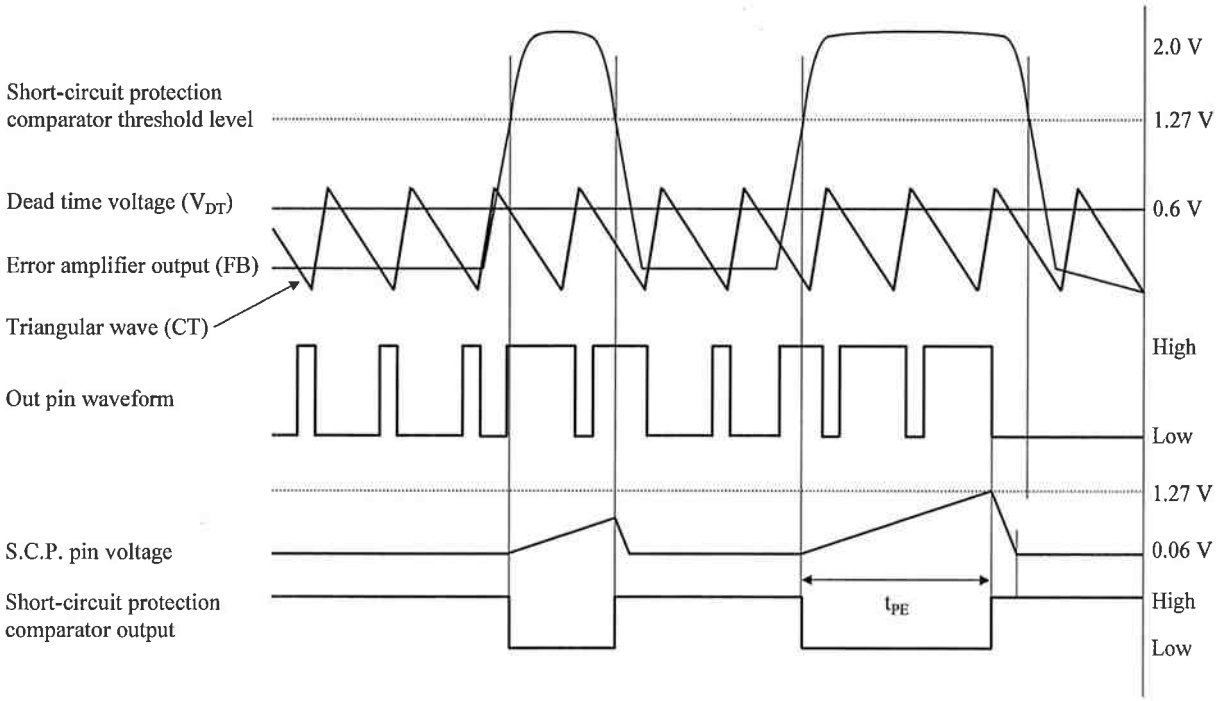

PACKAGE STANDARDS

Package Code	SSOP010-P-0225A

Semiconductor Company
Matsushita Electric Industrial Co., Ltd.

Established by	Applied by	Checked by	Prepared by
K.Komichi	H.Yoshida	M.Okajima	K.Kametaka

Exclusive use for AN8016SH-A

Established: 2006-07-05
Revised : -

	PACKAGE STANDARDS SSOP010-P-0225A	Total Pages	Page
		5	2

1. Outline Drawing

Unit:mm

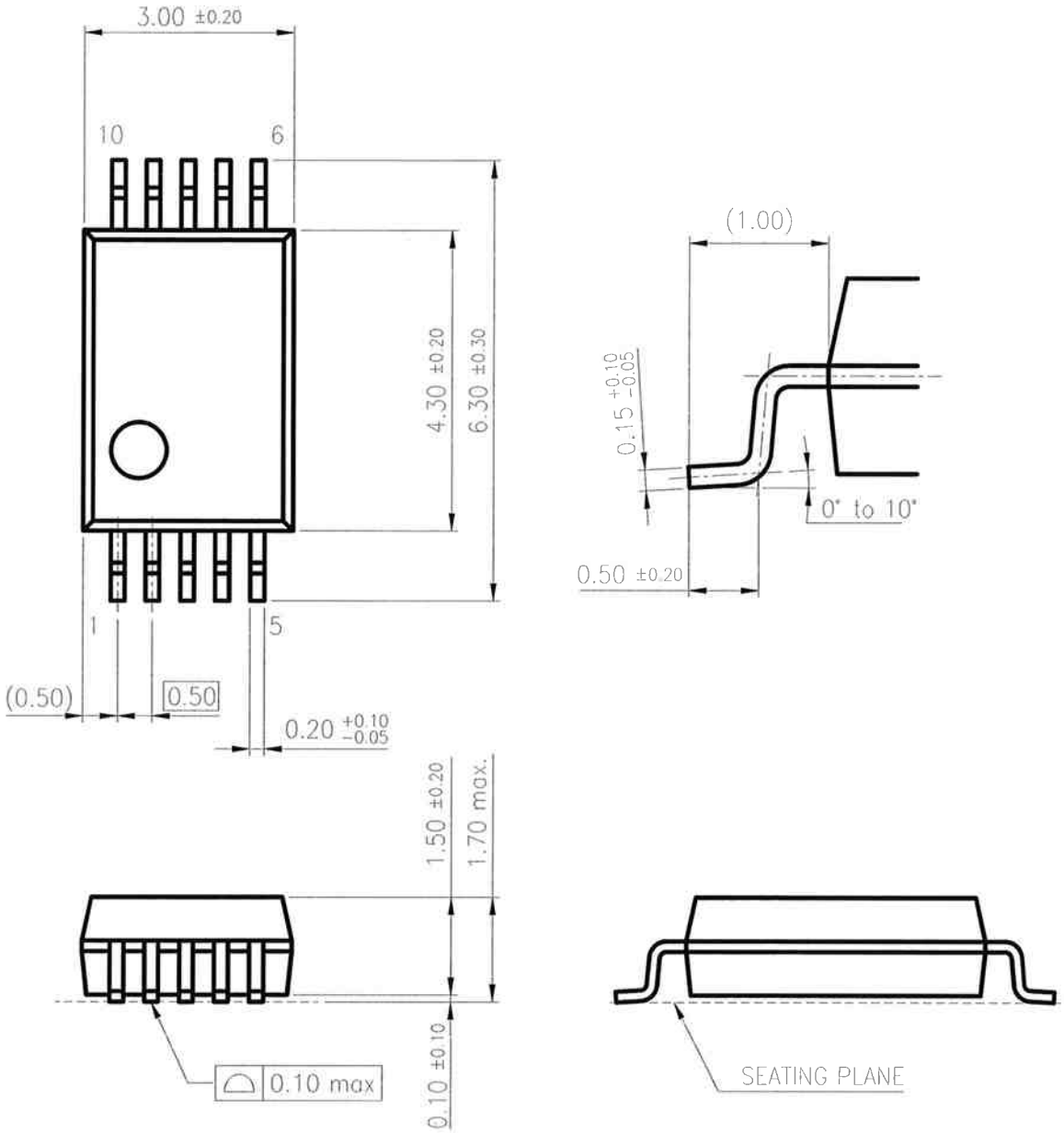

Body Material :	Epoxy resin
Lead Material :	Cu Alloy
Lead Finish Method :	SnBi Plating

Exclusive use for AN8016SH-A

Semiconductor Company, Matsushita Electric Industrial Co., Ltd.

Established: 2006-07-05
Revised : -

2. Mark Drawing

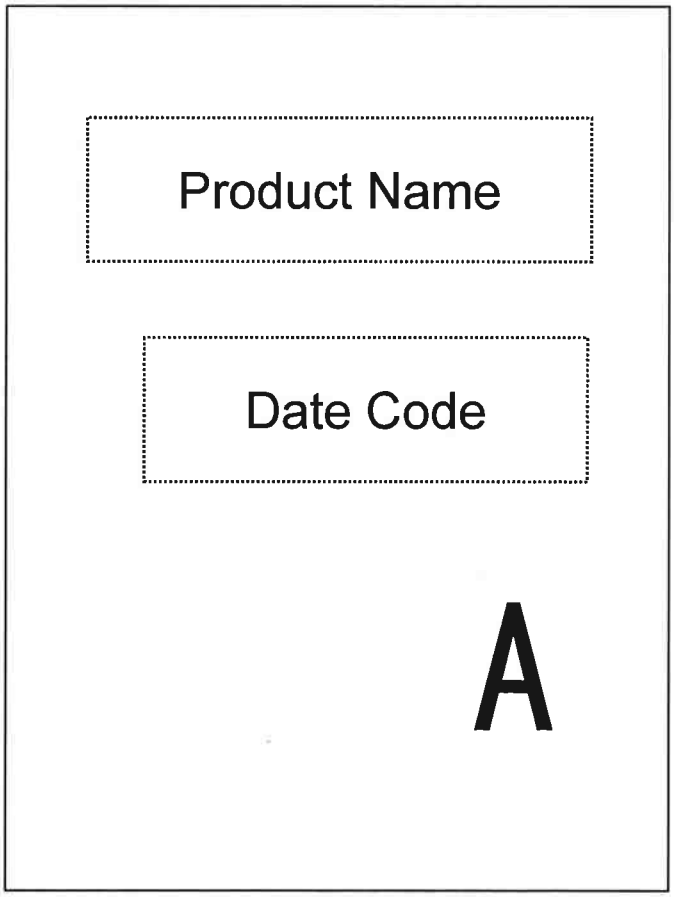

3. Power Dissipation (Technical Report)

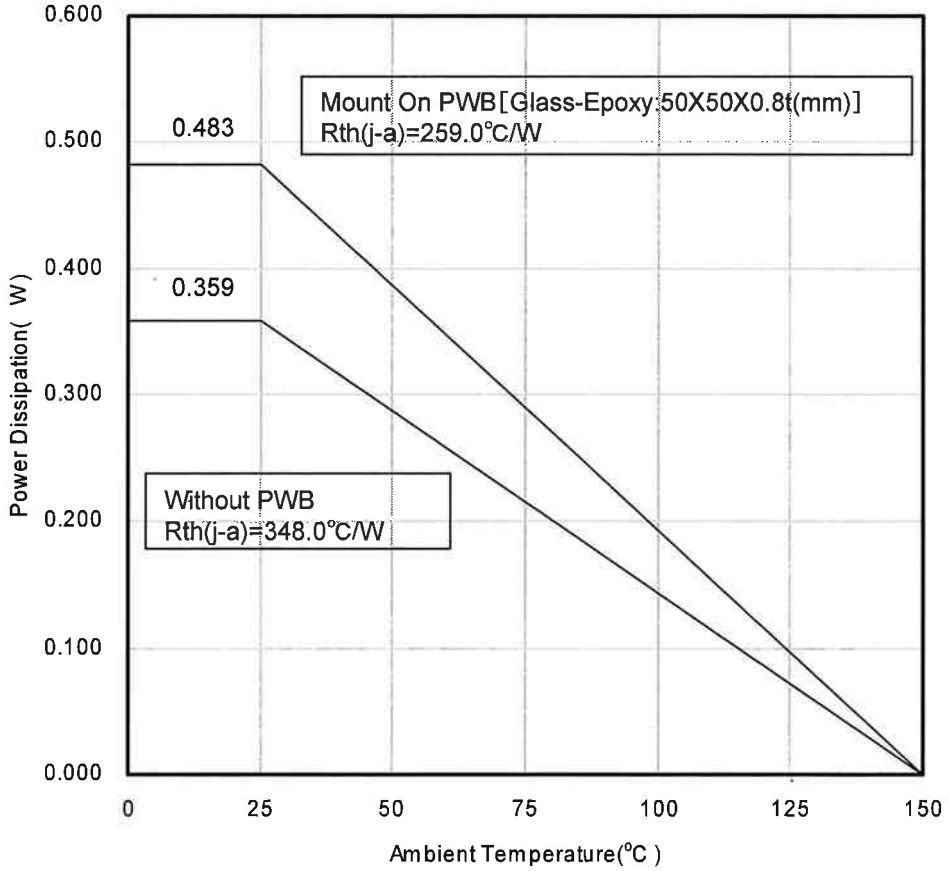

4. Power Dissipation (Supplementary Explanation)

[Experiment environment]

Power Dissipation (Technical Report) is a result in the experiment environment of SEMI standard conformity. (Ambient air temperature (Ta) is 25 degrees C)

[Supplementary information of PWB to be used for measurement]

The supplement of PWB information for Power Dissipation data (Technical Report) are shown below.

Indication	Total Layer	Resin Material
Glass-Epoxy	1-layer	FR-4
4-layer	4-layer	FR-4

[Notes about Power Dissipation (Thermal Resistance)]

Power Dissipation values (Thermal Resistance) depend on the conditions of the surroundings, such as specification of PWB and a mounting condition , and a ambient temperature. (Power Dissipation (Thermal Resistance) is not a fixed value.)

The Power Dissipation value (Technical Report) is the experiment result in specific conditions (evaluation environment of SEMI standard conformity) ,and keep in mind that Power Dissipation values (Thermal resistance) depend on circumference conditions and also change.

[Definition of each temperature and thermal resistance]

Ta : Ambient air temperature

※The temperature of the air is defined at the position where the convection, radiation, etc. don't affect the temperature value, and it's separated from the heating elements.

Tc : It's the temperature near the center of a package surface. The package surface is defined at the opposite side if the PWB.

Tj : Semiconductor element surface temperature (Junction temperature.)

Rth(j-c) : The thermal resistance (difference of temperature of per 1 Watts) between a semiconductor element junction part and the package surface

Rth(c-a) : The thermal resistance (difference of temperature of per 1 Watts) between the package surface and the ambient air

Rth(j-a) : The thermal resistance (difference of temperature of per 1 Watts) between a semiconductor element junction part and the ambient air

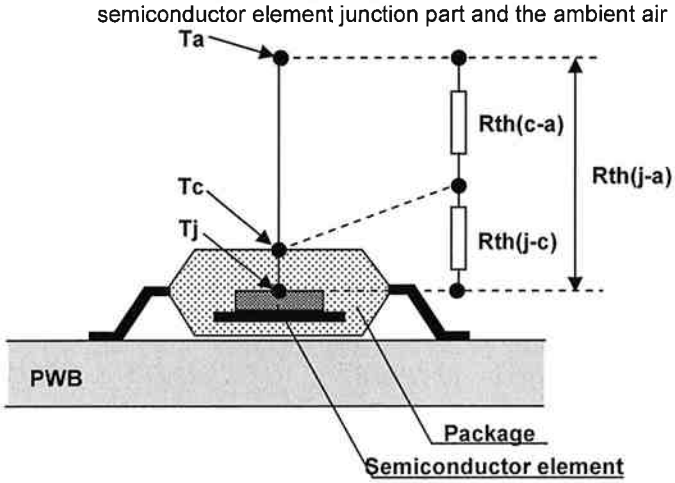

Fig1. Definition image

[Definition formula]

$$Tj=\{Rth(j\text{-}c)+Rth(c\text{-}a)\}\times P+Ta$$
$$=Rth(j\text{-}a)\times P+Ta$$

$$Rth(j\text{-}c) = \frac{Tj-Tc}{P} \quad (^{\circ}C/W)$$

$$Rth(c\text{-}a) = \frac{Tc-Ta}{P} \quad (^{\circ}C/W)$$

$$Rth(j\text{-}a) = \frac{Tj-Ta}{P} \quad (^{\circ}C/W)$$

$$= Rth(j\text{-}c)+Rth(c\text{-}a)$$

P:power(W)

Looking for pricing, stock, or lifecycle information?

Click below to explore more details on WIN SOURCE:

- View AN8016SHAE1V on WIN SOURCE
- Panasonic Information

Optimize Your Supply Chain with WIN SOURCE Solutions

- Global Sourcing Solution
- Obsolete Management
- Cost Control Management
- Shortage Management
- Alternative Solution
- Excess Inventory Management