THE DATASHEET OF

SDT5100D1-13

www.win-source.net 0086-755-83957316

NEW PRODUCT

SDT5100D1

5A TRENCH SCHOTTKY RECTIFIER

Product Summary

V_{RRM} (V)	I_O (A)	$V_{F\ (MAX)}$ (V) @ +25°C	$I_{R\ (MAX)}$ (µA) @ +25°C
100	5	0.65	50

Features and Benefits

- Low Forward Voltage Drop
- Excellent High Temperature Stability
- Soft, Fast Switching Capability
- **Lead-Free Finish; RoHS Compliant (Notes 1 & 2)**
- **Halogen and Antimony Free. "Green" Device (Note 3)**

Description and Applications

The SDT5100D1 provides very low V_F and extremely excellent reverse leakage stability at high temperatures. It is ideal for use as a rectifier, freewheel diode or blocking diode in:

- DC-DC Converters
- AC-DC Adaptors

Mechanical Data

- Case: TO252 (DPAK) (Type TH)
- Case Material: Molded Plastic, "Green" Molding Compound. UL Flammability Classification Rating 94V-0
- Moisture Sensitivity: Level 1 per J-STD-020
- Terminals: Finish - Matte Tin Annealed over Copper Leadframe. Solderable per MIL-STD-202, Method 208 e3
- Polarity: See Below
- Weight:0.317 grams (Approximate)

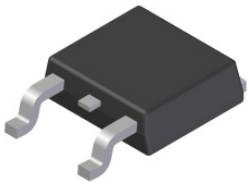

TO252 (DPAK) (Type TH)
Top View

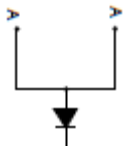

Package Pin Out
Configuration

Ordering Information (Note 4)

Part Number	Case	Packaging
SDT5100D1-13	TO252 (DPAK) (Type TH)	2,500 Pieces/Reel

Notes:
1. EU Directive 2002/95/EC (RoHS) & 2011/65/EU (RoHS 2) compliant. All applicable RoHS exemptions applied.
2. See http://www.diodes.com/quality/lead_free.html for more information about Diodes Incorporated's definitions of Halogen- and Antimony-free, "Green" and Lead-free.
3. Halogen- and Antimony-free "Green" products are defined as those which contain <900ppm bromine, <900ppm chlorine (<1500ppm total Br + Cl) and <1000ppm antimony compounds.
4. For packaging details, go to our website at https://www.diodes.com/design/support/packaging/diodes-packaging/.

Marking Information

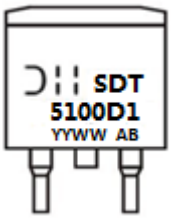

= Manufacturer's Marking
SDT5100D1 = Product Type Marking Code
AB = Foundry and Assembly Code
YYWW = Date Code Marking
YY = Last Two Digits of Year (ex: 17 = 2017)
WW = Week Code (01 to 53)

© Diodes Incorporated

NEW PRODUCT

Maximum Ratings (@T_A = +25°C, unless otherwise specified.)

Single phase, half wave, 60Hz, resistive or inductive load.
For capacitive load, derate current by 20%.

Characteristic	Symbol	Value	Unit
Peak Repetitive Reverse Voltage Working Peak Reverse Voltage DC Blocking Voltage	V_{RRM} V_{RWM} V_{RM}	100	V
Average Rectified Output Current	I_O	5	A
Non-Repetitive Peak Forward Surge Current 8.3ms Single Half Sine-Wave Superimposed on Rated Load	I_{FSM}	80	A

Thermal Characteristics

Characteristic	Symbol	Value	Unit
Typical Thermal Resistance, Junction to Case (Note 5)	$R_{\theta JC}$	2.5	°C/W
Operating and Storage Temperature Range	T_J, T_{STG}	-55 to +175	°C

Electrical Characteristics (@T_A = +25°C, unless otherwise specified.)

Characteristic	Symbol	Min	Typ	Max	Unit	Test Condition
Forward Voltage Drop	V_F	— — —	0.52 0.59 0.55	0.58 0.65 0.61	V	I_F = 3A, T_J = +25°C I_F = 5A, T_J = +25° I_F = 5A, T_J = +125°C
Leakage Current (Note 6)	I_R	— — —	1 3 2	10 50 15	μA μA mA	V_R = 70V, T_J = +25°C V_R = 100V, T_J = +25°C V_R = 100V, T_J = +125°C

Notes: 5. 2inch*2inch Al board.
6. Short duration pulse test used to minimize self-heating effect.

© Diodes Incorporated

NEW PRODUCT

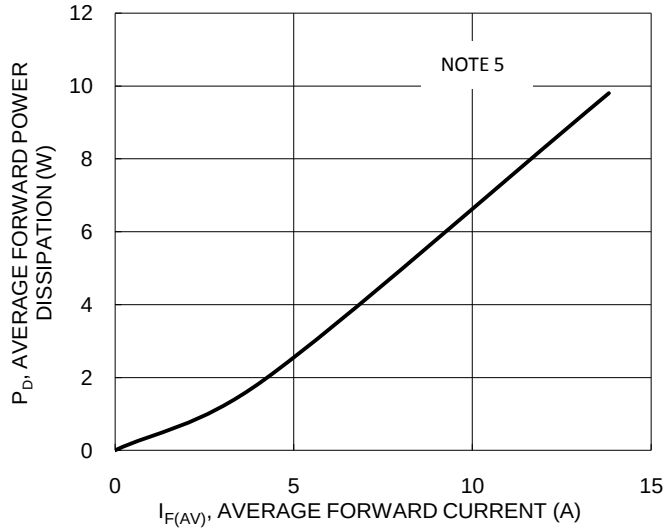

Figure 1. Forward Power Dissipation

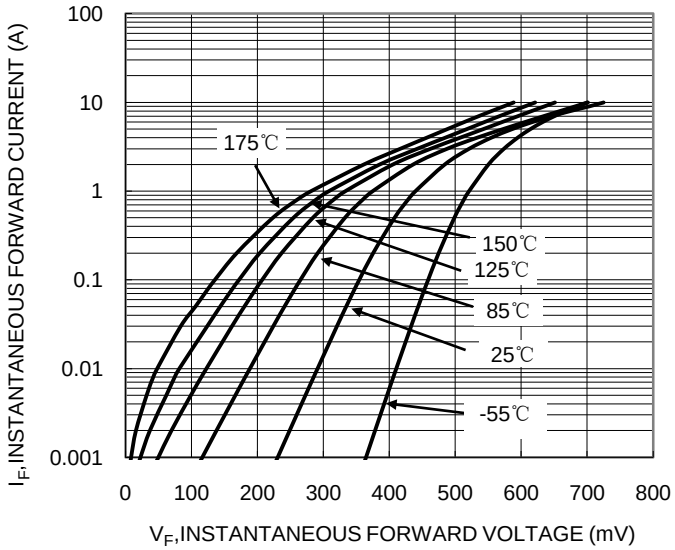

Figure 2. Typical Forward Characteristics

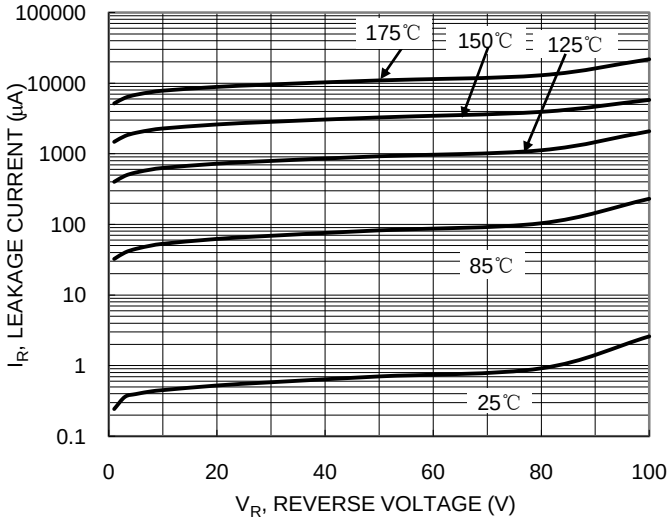

Figure 3 Typical Reverse Characteristics

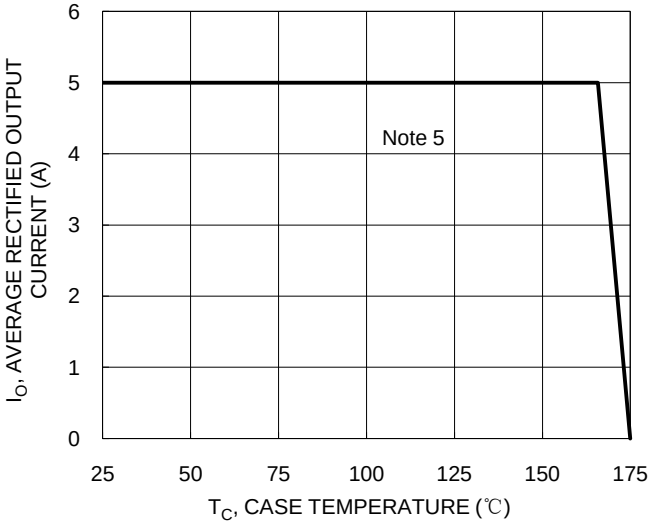

Figure 4. DC Forward Current Derating

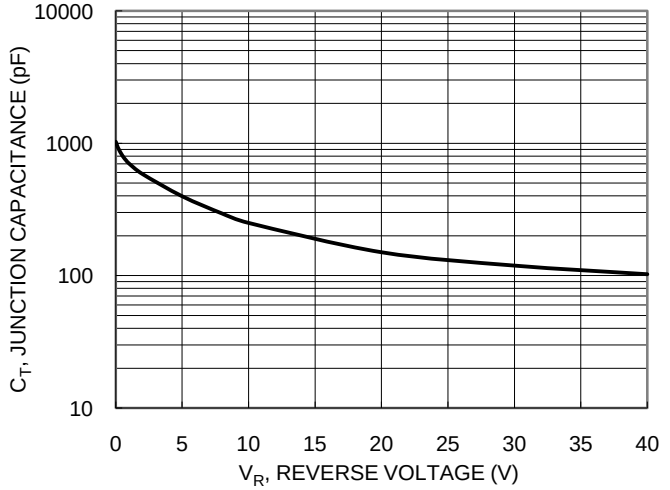

Figure 5. Typical Junction Capacitance

© Diodes Incorporated

NEW PRODUCT

Package Outline Dimensions

Please see http://www.diodes.com/package-outlines.html for the latest version.

TO252 (DPAK) (Type TH)

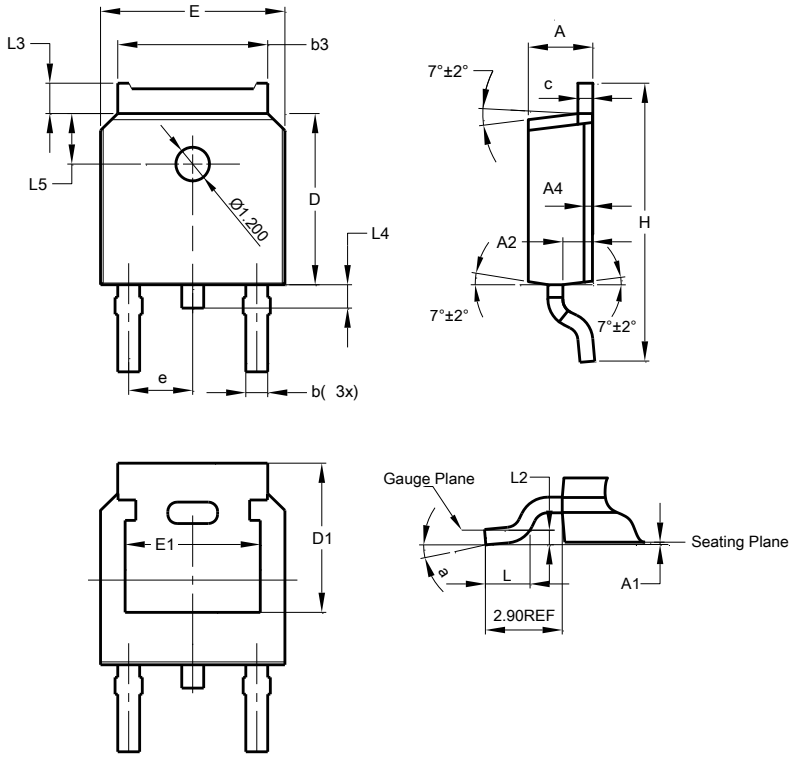

TO252 (DPAK) (Type TH)			
Dim	**Min**	**Max**	**Typ**
A	2.20	2.38	2.30
A1	0.00	0.10	-
A2	0.97	1.17	1.07
A4	0.10 REF		
b	0.72	0.85	0.78
b3	5.23	5.45	5.33
c	0.47	0.58	0.53
D	6.00	6.20	6.10
D1	5.30 REF		
e	2.286 BSC		
E	6.50	6.70	6.60
E1	4.70	4.92	4.83
H	9.90	10.10	10.30
L	1.40	1.70	1.60
L2	0.51 BSC		
L3	0.90	1.25	-
L4	0.60	1.00	0.80
L5	1.70	1.90	1.80
a	0°	8°	-
All Dimensions in mm			

Suggested Pad Layout

Please see http://www.diodes.com/package-outlines.html for the latest version.

TO252 (DPAK) (Type TH)

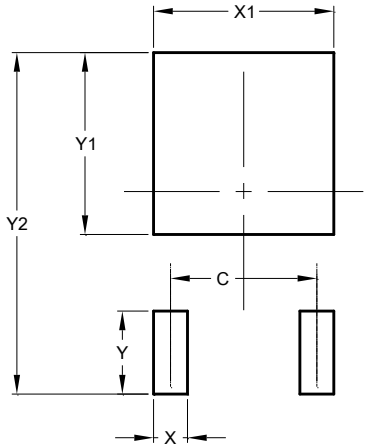

Dimensions	Value (in mm)
C	4.572
X	1.060
X1	5.632
Y	2.600
Y1	5.700
Y2	10.700

© Diodes Incorporated

NEW PRODUCT

IMPORTANT NOTICE

DIODES INCORPORATED MAKES NO WARRANTY OF ANY KIND, EXPRESS OR IMPLIED, WITH REGARDS TO THIS DOCUMENT, INCLUDING, BUT NOT LIMITED TO, THE IMPLIED WARRANTIES OF MERCHANTABILITY AND FITNESS FOR A PARTICULAR PURPOSE (AND THEIR EQUIVALENTS UNDER THE LAWS OF ANY JURISDICTION).

Diodes Incorporated and its subsidiaries reserve the right to make modifications, enhancements, improvements, corrections or other changes without further notice to this document and any product described herein. Diodes Incorporated does not assume any liability arising out of the application or use of this document or any product described herein; neither does Diodes Incorporated convey any license under its patent or trademark rights, nor the rights of others. Any Customer or user of this document or products described herein in such applications shall assume all risks of such use and will agree to hold Diodes Incorporated and all the companies whose products are represented on Diodes Incorporated website, harmless against all damages.

Diodes Incorporated does not warrant or accept any liability whatsoever in respect of any products purchased through unauthorized sales channel. Should Customers purchase or use Diodes Incorporated products for any unintended or unauthorized application, Customers shall indemnify and hold Diodes Incorporated and its representatives harmless against all claims, damages, expenses, and attorney fees arising out of, directly or indirectly, any claim of personal injury or death associated with such unintended or unauthorized application.

Products described herein may be covered by one or more United States, international or foreign patents pending. Product names and markings noted herein may also be covered by one or more United States, international or foreign trademarks.

This document is written in English but may be translated into multiple languages for reference. Only the English version of this document is the final and determinative format released by Diodes Incorporated.

LIFE SUPPORT

Diodes Incorporated products are specifically not authorized for use as critical components in life support devices or systems without the express written approval of the Chief Executive Officer of Diodes Incorporated. As used herein:

A. Life support devices or systems are devices or systems which:

1. are intended to implant into the body, or
2. support or sustain life and whose failure to perform when properly used in accordance with instructions for use provided in the labeling can be reasonably expected to result in significant injury to the user.

B. A critical component is any component in a life support device or system whose failure to perform can be reasonably expected to cause the failure of the life support device or to affect its safety or effectiveness.

Customers represent that they have all necessary expertise in the safety and regulatory ramifications of their life support devices or systems, and acknowledge and agree that they are solely responsible for all legal, regulatory and safety-related requirements concerning their products and any use of Diodes Incorporated products in such safety-critical, life support devices or systems, notwithstanding any devices- or systems-related information or support that may be provided by Diodes Incorporated. Further, Customers must fully indemnify Diodes Incorporated and its representatives against any damages arising out of the use of Diodes Incorporated products in such safety-critical, life support devices or systems.

Copyright © 2017, Diodes Incorporated

www.diodes.com

Looking for pricing, stock, or lifecycle information?

Click below to explore more details on WIN SOURCE:

- View SDT5100D1-13 on WIN SOURCE
- Diodes Incorporated Information

Optimize Your Supply Chain with WIN SOURCE Solutions

- Global Sourcing Solution
- Obsolete Management
- Cost Control Management
- Shortage Management
- Alternative Solution
- Excess Inventory Management