THE DATASHEET OF

SA305E474MAR

www.win-source.net 0086-755-83957316

AXIAL LEADS

SpinGuard®/SA Series

GENERAL INFORMATION

SA Series
Conformally Coated Axial Leaded MLC

Temperature Coefficients: C0G (NP0), X7R, X5R, Z5U
10, 50, 100, 200 Volts

Case Material: Epoxy (Flame Retardant to UL Bulletin 492, Par. 280)

Lead Material: Solderable

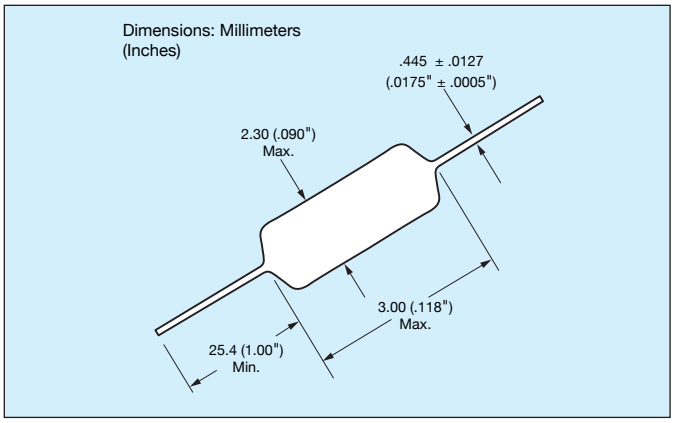

HOW TO ORDER

SA10 — **Conformal Axial Size**
SA05
SA10
SA11
SA20
SA30
SA40

5 — **Voltage**
Z = 10V
5 = 50V
1 = 100V
2 = 200V

E — **Dielectric**
A = C0G (NP0)
C = X7R
D = X5R
E = Z5U

104 — **Capacitance**
First two digits are the significant figures of capacitance. Third digit indicates the additional number of zeros. For example, order 100,000 pF as 104. (For values below 10pF use "R" in place of decimal point, e.g., 1R4 = 1.4pF.)

Z — **Capacitance Tolerance**
C0G (NP0):
C = ±.25pF
D = ±.5pF
F = ±1%
G = ±2%
J = ±5%
K = ±10%

X7R:
J = ±5%
K = ±10%
M = ±20%

X5R:
K = ±10%
M = ±20%

Z5U:
M = ±20%
Z = +80% -20%

A — **Failure Rate**
A = Not Applicable

R — **Leads**
Standard (Solderable)
R = RoHS Compliant
A = Standard Solderable (Also RoHS Compliant)

RoHS COMPLIANT

Please select correct termination style.

MARKING (EXAMPLE)

SpinGuard marking includes full date code/lot code identification. A first in the industry, this format provides complete traceability to all manufacturing processes involving the basic chip and final assembly. Total Shipment traceability is also provided.

SA05

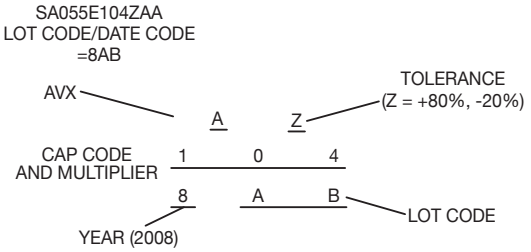

SA10, 11, 20, 30, 40

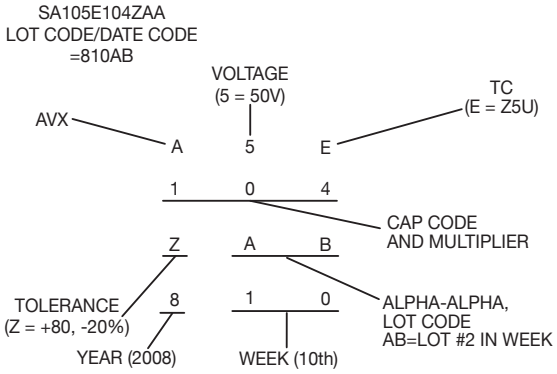

PACKAGING REQUIREMENTS

A = Standard Reels (see Page 49)
B = 1000 piece reels (distributors only, tight tolerance only)
C = Ammo Pack (see Page 49)
D thru J = See Special Lead Configurations (Page 41)
M = 26mm tape and reel
N = 26mm ammo pack
R = RoHS, Standard reels (See page 49)

The Important Information/Disclaimer is incorporated in the catalog where these specifications came from or available online at www.avx.com/disclaimer/ by reference and should be reviewed in full before placing any order.

SIZE AND CAPACITANCE SPECIFICATIONS

Dimensions: Millimeters (Inches)

Style		SA05		SA10			SA11		SA20		SA30		SA40	
Length (L)		3.00 (.118")		4.32 (.170")			4.32 (.170")		6.60 (.260")		7.37 (.290")		10.16 (.400")	
Diameter (D)		2.30 (.090")		2.54 (.100")			3.05 (.120")		2.54 (.100")		3.81 (.150")		3.81 (.150")	
Lead Diameter		.445 (.0175")		.445 (.0175")			.445 (.0175")		.445 (.0175")		.445 (.0175")		.445 (.0175")	
Lead Length		25.4 (1.00")		25.4 (1.00")			25.4 (1.00")		25.4 (1.00")		25.4 (1.00")		25.4 (1.00")	
Cap. in. pF	Typical Part Nos.	WVDC 100	50	WVDC 200	100	50	WVDC 100	50	WVDC 100	50	WVDC 100	50	WVDC 100	50
1.0*	SA102A1R0DAR													
⋮	⋮													
9.1*	SA102A9R1DAR													
10	SA102A100JAR													
12	SA102A120JAR													
15	SA102A150JAR													
18	SA102A180JAR													
22	SA102A220JAR													
27	SA102A270JAR													
33	SA102A330JAR													
39	SA102A390JAR													
47	SA102A470JAR													
56	SA102A560JAR													
68	SA102A680JAR													
82	SA102A820JAR													
100	**SA102A101JAR**													
120	SA102A121JAR													
150	SA101A151JAR													
180	SA101A181JAR													
220	SA101A221JAR													
270	SA101A271JAR													
330	SA101A331JAR													
390	SA101A391JAR													
470	SA101A471JAR													
560	SA101A561JAR													
680	SA101A681JAR													
820	SA101A821JAR													
1000	**SA105A102JAR**													
1200	SA201A122JAR													
1500	SA201A152JAR													
1800	SA205A182JAR													
2200	**SA301A222JAR**													
2700	SA301A272JAR													
3300	SA301A332JAR													
3900	SA301A392JAR													
4700	**SA305A472JAR**													
5600	SA401A562JAR													
6800	SA401A682JAR													
8200	**SA405A822JAR**													
10,000	**SA405A103JAR**													
12,000	SA405A123JAR													

For other tolerances see Part No. Codes
For other voltages see Part No. Codes
KYOCERA AVX Style

= Industry preferred values

*"C&D" Tolerance Only

The Important Information/Disclaimer is incorporated in the catalog where these specifications came from or available online at www.avx.com/disclaimer/ by reference and should be reviewed in full before placing any order.

SIZE AND CAPACITANCE SPECIFICATIONS

Dimensions: Millimeters (Inches)

Style	SA05	SA10	SA11	SA20	SA30	SA40
Length (L)	3.00 (.118")	4.32 (.170")	4.32 (.170")	6.60 (.260")	7.37 (.290")	10.16 (.400")
Diameter (D)	2.30 (.090")	2.54 (.100")	3.05 (.120")	2.54 (.100")	3.81 (.150")	3.81 (.150")
Lead Diameter	.445 (.0175")	.445 (.0175")	.445 (.0175")	.445 (.0175")	.445 (.0175")	.445 (.0175")
Lead Length	25.4 (1.00")	25.4 (1.00")	25.4 (1.00")	25.4 (1.00")	25.4 (1.00")	25.4 (1.00")

Cap. in. pF	Typical Part Nos.	SA05 WVDC 200	SA05 WVDC 100	SA05 WVDC 50	SA10 WVDC 200	SA10 WVDC 100	SA10 WVDC 50	SA11 WVDC 100	SA11 WVDC 50	SA20 WVDC 100	SA20 WVDC 50	SA30 WVDC 100	SA30 WVDC 50	SA40 WVDC 100	SA40 WVDC 50
220	SA102C221KAR														
270	SA102C271KAR														
330	SA102C331KAR														
390	SA102C391KAR														
470	SA102C471KAR														
560	SA101C561KAR														
680	SA101C681KAR														
820	SA101C821KAR														
1000	SA101C102KAR														
1200	SA101C122KAR														
1500	SA101C152KAR														
1800	SA101C182KAR														
2200	SA101C222KAR														
2700	SA101C272KAR														
3300	SA101C332KAR														
3900	SA101C392KAR														
4700	SA101C472KAR														
5600	SA101C562KAR														
6800	SA101C682KAR														
8200	SA105C822KAR														
10,000	**SA105C103KAR**														
12,000	SA105C123KAR														
15,000	SA105C153KAR														
18,000	SA105C183KAR														
22,000	SA105C223KAR														
27,000	SA105C273KAR														
33,000	SA105C333KAR														
39,000	SA105C393KAR														
47,000	**SA105C473KAR**														
56,000	SA115C563KAR														
68,000	SA115C683KAR														
82,000	SA115C823KAR														
100,000	**SA115C104KAR**														
120,000	SA305C124KAR														
150,000	SA305C154KAR														
180,000	SA305C184KAR														
220,000	**SA305C224KAR**														
270,000	SA305C274KAR														
330,000	SA305C334KAR														
470,000	SA405C474KAR														
1,000,000	SA305C105KAR														

For other tolerances see Part No. Codes
For other voltages see Part No. Codes
Style

= Industry preferred values

The Important Information/Disclaimer is incorporated in the catalog where these specifications came from or available online at www.avx.com/disclaimer/ by reference and should be reviewed in full before placing any order.

SIZE AND CAPACITANCE SPECIFICATIONS

Dimensions: Millimeters (Inches)

Style		SA05	SA10		SA11		SA20		SA30		SA40	
Length (L)		3.00 (.118")	4.32 (.170")		4.32 (.170")		6.60 (.260")		7.37 (.290")		10.16 (.400")	
Diameter (D)		2.30 (.090")	2.54 (.100")		3.05 (.120")		2.54 (.100")		3.81 (.150")		3.81 (.150")	
Lead Diameter		.445 (.0175")	.445 (.0175")		.445 (.0175")		.445 (.0175")		.445 (.0175")		.445 (.0175")	
Lead Length		25.4 (1.00")	25.4 (1.00")		25.4 (1.00")		25.4 (1.00")		25.4 (1.00")		25.4 (1.00")	
Cap. in. pF	Typical Part Nos.	WVDC 50	WVDC 100	50	WVDC 100	50	WVDC 100	50	WVDC 100	50	WVDC 100	50
10,000	**SA105E103ZAR**											
15,000	SA105E153ZAR											
22,000	SA105E223ZAR											
33,000	SA105E333ZAR											
47,000	SA105E473ZAR											
68,000	SA105E683ZAR											
***100,000**	**SA105E104ZAR**											
150,000	SA105E154ZAR											
220,000	**SA105E224ZAR**											
330,000	**SA115E334ZAR**											
470,000	**SA305E474ZAR**											
680,000	SA305E684ZAR											
820,000	SA305E824ZAR											
1,000,000	**SA305E105ZAR**											

For other tolerances see Part No. Codes
For other voltages see Part No. Codes
Style

= Industry preferred values

***Preferred Industry Decoupling Capacitor —** Insertable on .300" centers.
SA105E104ZAA

The Important Information/Disclaimer is incorporated in the catalog where these specifications came from or available online at www.avx.com/disclaimer/ by reference and should be reviewed in full before placing any order.

Looking for pricing, stock, or lifecycle information?

Click below to explore more details on WIN SOURCE:

- View SA305E474MAR on WIN SOURCE
- AVX Corp/Kyocera Corp Information

Optimize Your Supply Chain with WIN SOURCE Solutions

- Global Sourcing Solution
- Obsolete Management
- Cost Control Management
- Shortage Management
- Alternative Solution
- Excess Inventory Management