THE DATASHEET OF

R7FS7G27H2A01CLK#AC0

www.win-source.net 0086-755-83957316

Datasheet

S7G2 Microcontroller Group

Datasheet

Renesas Synergy™ Platform

Synergy Microcontrollers
S7 Series

All information contained in these materials, including products and product specifications, represents information on the product at the time of publication and is subject to change by Renesas Electronics Corp. without notice. Please review the latest information published by Renesas Electronics Corp. through various means, including the Renesas Electronics Corp. website (http://www.renesas.com).

Renesas Electronics
www.renesas.com

Rev.1.40 Aug 2018

Leading performance 240-MHz Arm® Cortex®-M4 core, up to 4-MB code flash memory, 640-KB SRAM, Graphics LCD Controller, 2D Drawing Engine, Capacitive Touch Sensing Unit, Ethernet MAC Controller with IEEE 1588 PTP, USB 2.0 High-Speed, USB 2.0 Full-Speed, SDHI, Quad SPI, security and safety features, and advanced analog.

Features

■ Arm Cortex-M4 Core with Floating Point Unit (FPU)
- Armv7E-M architecture with DSP instruction set
- Maximum operating frequency: 240 MHz
- Support for 4-GB address space
- On-chip debugging system: JTAG, SWD, and ETM
- Boundary scan and Arm® Memory Protection Unit (MPU)

■ Memory
- Up to 4-MB code flash memory (80 MHz zero wait states)
- 64-KB data flash memory (125,000 erase/write cycles)
- Up to 640-KB SRAM
- Flash Cache (FCACHE)
- Memory Protection Units (MPU)
- Memory Mirror Function (MMF)
- 128-bit unique ID

■ Connectivity
- Ethernet MAC Controller (ETHERC) × 2
- Ethernet DMA Controller (EDMAC)
- Ethernet PTP Controller (EPTPC)
- USB 2.0 High-Speed Module (USBHS)
  - On-chip transceiver
  - USB battery charge version 1.2 supported
- USB 2.0 Full-Speed Module (USBFS)
  - On-chip transceiver
- Serial Communications Interface (SCI) with FIFO × 10
- Serial Peripheral Interface (SPI) × 2
- I^2C Bus Interface (IIC) × 3
- CAN module (CAN) × 2
- Serial Sound Interface (SSI) × 2
- SD/MMC Host Interface (SDHI) × 2
- Quad Serial Peripheral Interface (QSPI)
- IrDA interface
- Sampling Rate Converter (SRC)
- External memory space
  - 8-bit or 16-bit bus space is selectable per area
  - SDRAM support

■ Analog
- 12-Bit A/D Converter (ADC12) with 3 sample-and-hold circuits each, x2
- 12-Bit D/A Converter (DAC12) × 2
- High-Speed Analog Comparator (ACMPHS) × 6
- Programmable Gain Amplifier (PGA) × 6
- Temperature Sensor (TSN)

■ Timers
- General PWM Timer 32-Bit Enhanced High Resolution (GPT32EH) × 4
- General PWM Timer 32-Bit Enhanced (GPT32E) × 4
- General PWM Timer 32-Bit (GPT32) × 6
- Asynchronous General-Purpose Timer (AGT) × 2
- Watchdog Timer (WDT)

■ Safety
- SRAM parity error check
- Flash area protection
- ADC self-diagnosis function
- Clock Frequency Accuracy Measurement Circuit (CAC)
- Cyclic Redundancy Check (CRC) calculator
- Data Operation Circuit (DOC)
- Port Output Enable for GPT (POEG)
- Independent Watchdog Timer (IWDT)
- GPIO readback level detection
- Register write protection
- Main oscillator stop detection
- Illegal memory access

■ System and Power Management
- Low power modes
- Switching regulator
- Realtime Clock (RTC) with calendar and VBATT support
- Event Link Controller (ELC)
- DMA Controller (DMAC) × 8
- Data Transfer Controller (DTC)
- Key Interrupt Function (KINT)
- Power-on reset
- Low Voltage Detection (LVD) with voltage settings

■ Security and Encryption
- AES128/192/256
- 3DES/ARC4
- SHA1/SHA224/SHA256/MD5
- GHASH
- RSA/DSA/ECC
- True Random Number Generator (TRNG)

■ Human Machine Interface (HMI)
- Graphics LCD Controller (GLCDC)
- JPEG Codec
- 2D Drawing Engine (DRW)
- Capacitive Touch Sensing Unit (CTSU)
- Parallel Data Capture Unit (PDC)

■ Multiple Clock Sources
- Main clock oscillator (MOSC) (8 to 24 MHz)
- Sub-clock oscillator (SOSC) (32.768 kHz)
- High-speed on-chip oscillator (HOCO) (16/18/20 MHz)
- Middle-speed on-chip oscillator (MOCO) (8 MHz)
- Low-speed on-chip oscillator (LOCO) (32.768 kHz)
- IWDT-dedicated on-chip oscillator (15 kHz)
- Clock trim function for HOCO/MOCO/LOCO
- Clock out support

■ General-Purpose I/O Ports
- Up to 172 input/output pins
  - Up to 9 CMOS input
  - Up to 163 CMOS input/output
    - Up to 22 input/output 5 V tolerant
    - Up to 24 high current (20 mA)

■ Operating Voltage
- VCC: 2.7 to 3.6 V

■ Operating Temperature and Packages
- Ta = –40°C to +85°C
  - 224-pin BGA (13 mm × 13 mm, 0.8 mm pitch)
  - 176-pin BGA (13 mm × 13 mm, 0.8 mm pitch)
  - 145-pin LGA (7 mm × 7 mm, 0.5 mm pitch)
- Ta = –40°C to +105°C
  - 176-pin LQFP (24 mm × 24 mm, 0.5 mm pitch)
  - 144-pin LQFP (20 mm × 20 mm, 0.5 mm pitch)
  - 100-pin LQFP (14 mm × 14 mm, 0.5 mm pitch)

1. Overview

The MCU integrates multiple series of software- and pin-compatible Arm®-based 32-bit cores that share a common set of Renesas peripherals to facilitate design scalability and efficient platform-based product development.

The MCU in this series incorporates a high-performance Arm Cortex®-M4 core running up to 240 MHz with the following features:

- Up to 4-MB code flash memory
- 640-KB SRAM
- Graphics LCD Controller (GLCDC)
- 2D Drawing Engine (DRW)
- Capacitive Touch Sensing Unit (CTSU)
- Ethernet MAC Controller (ETHERC) with IEEE 1588 PTP, USBFS, USBHS, SD/MMC Host Interface
- Quad Serial Peripheral Interface (QSPI)
- Security and safety features
- Analog peripherals.

1.1 Function Outline

Table 1.1 Arm core

Feature	Functional description
Arm Cortex-M4 core	• Maximum operating frequency: up to 240 MHz • Arm Cortex-M4 core: - Revision: r0p1-01rel0 - Armv7E-M architecture profile - Single precision floating-point unit compliant with the ANSI/IEEE Std 754-2008 • Arm Memory Protection Unit (Arm MPU): - Armv7 Protected Memory System Architecture - 8 protect regions • SysTick timer: - Driven by SYSTICCLK (LOCO) or ICLK.

Table 1.2 Memory

Feature	Functional description
Code flash memory	Maximum 4 MB of code flash memory. See section 55, Flash Memory in User's Manual.
Data flash memory	64 KB of data flash memory. See section 55, Flash Memory in User's Manual.
Option-setting memory	The option-setting memory determines the state of the MCU after a reset. See section 7, Option-Setting Memory in User's Manual.
Memory Mirror Function (MMF)	The Memory Mirror Function (MMF) can be configured to mirror the wanted application image load address in code flash memory to the application image link address in the 23-bit unused memory space (memory mirror space addresses). Your application code is developed and linked to run from this MMF destination address. The application code does not need to know the load location where it is stored in code flash memory. See section 5, Memory Mirror Function (MMF) in User's Manual.
SRAM	On-chip high-speed SRAM providing either parity-bit or Double-bit Error Detection (DED). The first 32 KB of SRAM0 is subject to DED. Parity check is performed for other areas. See section 53, SRAM in User's Manual.
Standby SRAM	On-chip SRAM that can retain data in Deep Software Standby mode. See section 54, Standby SRAM in User's Manual.

Table 1.3 System (1 of 2)

Feature	Functional description
Operating modes	Two operating modes: - Single-chip mode - SCI or USB boot mode. See section 3, Operating Modes in User's Manual.
Resets	14 resets: • RES pin reset • Power-on reset • Voltage monitor 0 reset • Voltage monitor 1 reset • Voltage monitor 2 reset • Independent watchdog timer reset • Watchdog timer reset • Deep Software Standby reset • SRAM parity error reset • SRAM DED error reset • Bus master MPU error reset • Bus slave MPU error reset • Stack pointer error reset • Software reset. See section 6, Resets in User's Manual.
Low Voltage Detection (LVD)	The Low Voltage Detection (LVD) function monitors the voltage level input to the VCC pin, and the detection level can be selected using a software program. See section 8, Low Voltage Detection (LVD) in User's Manual.
Clocks	• Main clock oscillator (MOSC) • Sub-clock oscillator (SOSC) • High-speed on-chip oscillator (HOCO) • Middle-speed on-chip oscillator (MOCO) • Low-speed on-chip oscillator (LOCO) • PLL frequency synthesizer • IDWT-dedicated on-chip oscillator • Clock out support. See section 9, Clock Generation Circuit in User's Manual.
Clock Frequency Accuracy Measurement Circuit (CAC)	The Clock Frequency Accuracy Measurement Circuit (CAC) counts pulses of the clock to be measured (measurement target clock) within the time generated by the clock to be used as a measurement reference (measurement reference clock), and determines the accuracy depending on whether the number of pulses is within the allowable range. When measurement is complete or the number of pulses within the time generated by the measurement reference clock is not within the allowable range, an interrupt request is generated. See section 10, Clock Frequency Accuracy Measurement Circuit (CAC) in User's Manual.
Interrupt Controller Unit (ICU)	The Interrupt Controller Unit (ICU) controls which event signals are linked to the NVIC/DTC module and DMAC module. The ICU also controls NMI interrupts. See section 14, Interrupt Controller Unit (ICU) in User's Manual.
Key interrupt function (KINT)	A key interrupt can be generated by setting the Key Return Mode register (KRM) and inputting a rising or falling edge to the key interrupt input pins. See section 21, Key Interrupt Function (KINT) in User's Manual.
Low power modes	Power consumption can be reduced in multiple ways, including by setting clock dividers, controlling EBCLK output, controlling SDCLK output, stopping modules, selecting power control mode in normal operation, and transitioning to low power modes. See section 11, Low Power Modes in User's Manual.
Battery backup function	A battery backup function is provided for partial powering by a battery. The battery-powered area includes the RTC, SOSC, backup memory, and switch between VCC and VBATT. See section 12, Battery Backup Function in User's Manual.
Register write protection	The register write protection function protects important registers from being overwritten because of software errors. See section 13, Register Write Protection in User's Manual.
Memory Protection Unit (MPU)	Three Memory Protection Units (MPUs) and a CPU stack pointer monitor function are provided for memory protection. See section 16, Memory Protection Unit (MPU) in User's Manual.

Table 1.3 System (2 of 2)

Feature	Functional description
Watchdog Timer (WDT)	The Watchdog Timer (WDT) is a 14-bit down-counter that can be used to reset the MCU when the counter underflows because the system has run out of control and is unable to refresh the WDT. In addition, a non-maskable interrupt or interrupt can be generated by an underflow. A refresh-permitted period can be set to refresh the counter and used as the condition for detecting when the system runs out of control. See section 27, Watchdog Timer (WDT) in User's Manual.
Independent Watchdog Timer (IWDT)	The Independent Watchdog Timer (IWDT) consists of a 14-bit down-counter that must be serviced periodically to prevent counter underflow. The IWDT provides functionality to reset the MCU or to generate a non-maskable interrupt or interrupt for a timer underflow. Because the timer operates with an independent, dedicated clock source, it is particularly useful in returning the MCU to a known state as a fail safe mechanism when the system runs out of control. The IWDT can be triggered automatically on a reset, underflow, or refresh error, or by a refresh of the count value in the registers. See section 28, Independent Watchdog Timer (IWDT) in User's Manual.

Table 1.4 Event link

Feature	Functional description
Event Link Controller (ELC)	The Event Link Controller (ELC) uses the interrupt requests generated by various peripheral modules as event signals to connect them to different modules, enabling direct interaction between the modules without CPU intervention. See section 19, Event Link Controller (ELC) in User's Manual.

Table 1.5 Direct memory access

Feature	Functional description
Data Transfer Controller (DTC)	A Data Transfer Controller (DTC) module is provided for transferring data when activated by an interrupt request. See section 18, Data Transfer Controller (DTC) in User's Manual.
DMA Controller (DMAC)	An 8-channel DMA Controller (DMAC) module is provided for transferring data without the CPU. When a DMA transfer request is generated, the DMAC transfers data stored at the transfer source address to the transfer destination address. See section 17, DMA Controller (DMAC) in User's Manual.

Table 1.6 External bus interface

Feature	Functional description
External buses	• CS area (EXBIU): Connected to the external devices (external memory interface) • SDRAM area (EXBIU): Connected to the SDRAM (external memory interface) • QSPI area (EXBIUT2): Connected to the QSPI (external device interface).

Table 1.7 Timers (1 of 2)

Feature	Functional description
General PWM Timer (GPT)	The General PWM Timer (GPT) is a 32-bit timer with 14 channels. PWM waveforms can be generated by controlling the up-counter, down-counter, or up- and down-counter. In addition, PWM waveforms can be generated for controlling brushless DC motors. The GPT can also be used as a general-purpose timer. See section 23, General PWM Timer (GPT) in User's Manual.
Port Output Enable for GPT (POEG)	Use the Port Output Enable for GPT (POEG) function to place the General PWM Timer (GPT) output pins in the output disable state. See section 22, Port Output Enable for GPT (POEG) in User's Manual.
Asynchronous General-Purpose Timer (AGT)	The Asynchronous General Purpose Timer (AGT) is a 16-bit timer that can be used for pulse output, external pulse width or period measurement, and counting of external events. This 16-bit timer consists of a reload register and a down-counter. The reload register and the down-counter are allocated to the same address, and can be accessed with the AGT register. See section 25, Asynchronous General-Purpose Timer (AGT) in User's Manual.

Table 1.7 Timers (2 of 2)

Feature	Functional description
Realtime Clock (RTC)	The Realtime Clock (RTC) has two counting modes, calendar count mode and binary count mode, that are controlled by the register settings. For calendar count mode, the RTC has a 100-year calendar from 2000 to 2099 and automatically adjusts dates for leap years. For binary count mode, the RTC counts seconds and retains the information as a serial value. Binary count mode can be used for calendars other than the Gregorian (Western) calendar. See section 26, Realtime Clock (RTC) in User's Manual.

Table 1.8 Communication interfaces (1 of 2)

Feature	Functional description
Serial Communications Interface (SCI)	The Serial Communications Interface (SCI) is configurable to five asynchronous and synchronous serial interfaces: • Asynchronous interfaces (UART and Asynchronous Communications Interface Adapter (ACIA)) • 8-bit clock synchronous interface • Simple IIC (master-only) • Simple SPI • Smart card interface. The smart card interface complies with the ISO/IEC 7816-3 standard for electronic signals and transmission protocol. Each SCI has FIFO buffers to enable continuous and full-duplex communication, and the data transfer speed can be configured independently using an on-chip baud rate generator. See section 34, Serial Communications Interface (SCI) in User's Manual.
IrDA Interface (IrDA)	The IrDA interface sends and receives IrDA data communication waveforms in cooperation with the SCI1 based on the IrDA (Infrared Data Association) standard 1.0. See section 35, IrDA Interface in User's Manual.
I^2C bus Interface (IIC)	The 3-channel I^2C bus interface (IIC) conforms with and provides a subset of the NXP I^2C (Inter-Integrated Circuit) bus interface functions. See section 36, I2C Bus Interface (IIC) in User's Manual.
Serial Peripheral Interface (SPI)	Two independent Serial Peripheral Interface (SPI) channels are capable of high-speed, full-duplex synchronous serial communications with multiple processors and peripheral devices. See section 38, Serial Peripheral Interface (SPI) in User's Manual.
Serial Sound Interface (SSI)	The Serial Sound Interface Enhanced (SSIE) peripheral provides functionality to interface with digital audio devices for transmitting PCM audio data over a serial bus with the MCU. The SSI supports an audio clock frequency of up to 50 MHz, and can be operated as a slave or master receiver, transmitter, or transceiver to suit various applications. The SSI includes 8-stage FIFO buffers in the receiver and transmitter, and supports interrupts and DMA-driven data reception and transmission. See section 41, Serial Sound Interface (SSI) in User's Manual.
Quad Serial Peripheral Interface (QSPI)	The Quad Serial Peripheral Interface (QSPI) is a memory controller for connecting a serial ROM (nonvolatile memory such as a serial flash memory, serial EEPROM, or serial FeRAM) that has an SPI-compatible interface. See section 39, Quad Serial Peripheral Interface (QSPI) in User's Manual.
Controller Area Network (CAN) module	The Controller Area Network (CAN) module provides functionality to receive and transmit data using a message-based protocol between multiple slaves and masters in electromagnetically-noisy applications. The CAN module complies with the ISO 11898-1 (CAN 2.0A/CAN 2.0B) standard and supports up to 32 mailboxes, which can be configured for transmission or reception in normal mailbox and FIFO modes. Both standard (11-bit) and extended (29-bit) messaging formats are supported. See section 37, Controller Area Network (CAN) Module in User's Manual.
USB 2.0 Full-Speed (USBFS) module	The USB 2.0 Full-Speed (USBFS) module can operate as a host controller or device controller. The module supports full-speed and low-speed (host controller only) transfer as defined in Universal Serial Bus Specification 2.0. The module has an internal USB transceiver and supports all of the transfer types defined in Universal Serial Bus Specification 2.0. The USB has buffer memory for data transfer, providing a maximum of 10 pipes. Pipes 1 to 9 can be assigned any endpoint number based on the peripheral devices used for communication or based on your system. See section 32, USB 2.0 Full-Speed Module (USBFS) in User's Manual.

Table 1.8 Communication interfaces (2 of 2)

Feature	Functional description
USB 2.0 High-Speed (USBHS) module	The USB 2.0 High-Speed (USBHS) module can operate as a host controller or a device controller. As a host controller, the USBHS supports high-speed transfer, full-speed transfer, and low-speed transfer as defined in Universal Serial Bus Specification 2.0. As a device controller, the USBHS supports high-speed transfer and full-speed transfer as defined in Universal Serial Bus Specification 2.0. The USBHS has an internal USB transceiver and supports all of the transfer types defined in Universal Serial Bus Specification 2.0. The USBHS has FIFO buffers for data transfer, providing a maximum of 10 pipes. Any endpoint number can be assigned to pipes 1 to 9, based on the peripheral devices or your system for communication. See section 33, USB 2.0 High-Speed Module (USBHS) in User's Manual.
Ethernet MAC with IEEE 1588 PTP (ETHERC)	Two-channel Ethernet MAC Controller (ETHERC) compliant with the Ethernet/IEEE802.3 Media Access Control (MAC) layer protocol. Each ETHERC channel provides one channel of the MAC layer interface, connecting the MCU to the physical layer LSI (PHY-LSI) that allows transmission and reception of frames compliant with the Ethernet and IEEE802.3 standards. The ETHERC is connected to the Ethernet DMA Controller (EDMAC) so data can be transferred without using the CPU. To handle timing and synchronization between devices, an on-chip Precision Time Protocol (PTP) module for the Ethernet PTP Controller (EPTPC) applies the PTP defined in the IEEE 1588-2008 version 2.0 standard. The EPTPC is composed of: • Synchronization Frame Processing units (SYNFP0 and SYNFP1) • A Packet Relation Controller unit (PRC-TC) • A Statistical Time Correction Algorithm unit (STCA). Use the EPTPC in combination with the on-chip Ethernet MAC Controller (ETHERC) and the DMA Controller for the PTP Ethernet Controller (PTPEDMAC). See section 29, Ethernet MAC Controller (ETHERC) in User's Manual.
SD/MMC Host Interface (SDHI)	The SDHI and MultiMediaCard (MMC) interface module provides the functionality required to connect a variety of external memory cards to the MCU. The SDHI supports both 1-bit and 4-bit buses for connecting memory cards that support SD, SDHC, and SDXC formats. When developing host devices that are compliant with the SD Specifications, you must comply with the SD Host/Ancillary Product License Agreement (SD HALA). The MMC interface supports 1-bit, 4-bit, and 8-bit MMC buses that provide eMMC 4.51 (JEDEC Standard JESD 84-B451) device access. This interface also provides backward compatibility and supports high-speed SDR transfer modes. See section 43, SD/MMC Host Interface (SDHI) in User's Manual.

Table 1.9 Analog

Feature	Functional description
12-bit A/D Converter (ADC12)	Up to two successive approximation 12-bit A/D Converters (ADC12) are provided. In unit 0, up to 13 analog input channels are selectable. In unit 1, up to 12 analog input channels, the temperature sensor output, and an internal reference voltage are selectable for conversion. The A/D conversion accuracy is selectable from 12-bit, 10-bit, and 8-bit conversion, making it possible to optimize the tradeoff between speed and resolution in generating a digital value. See section 47, 12-Bit A/D Converter (ADC12) in User's Manual.
12-bit D/A Converter (DAC12)	A 12-bit D/A Converter (DAC12) converts data and includes an output amplifier. See section 48, 12-Bit D/A Converter (DAC12) in User's Manual.
Temperature sensor (TSN)	The on-chip Temperature Sensor (TSN) can determine and monitor the die temperature for reliable operation of the device. The sensor outputs a voltage directly proportional to the die temperature, and the relationship between the die temperature and the output voltage is linear. The output voltage is provided to the ADC12 for conversion and can also be used by the end application. See section 49, Temperature Sensor (TSN) in User's Manual.
High-Speed Analog Comparator (ACMPHS)	The High-Speed Analog Comparator (ACMPHS) compares a test voltage with a reference voltage and provides a digital output based on the conversion result. Both the test and reference voltages can be provided to the comparator from internal sources such as the DAC12 output and internal reference voltage, and an external source with or without an internal PGA. Such flexibility is useful in applications that require go/no-go comparisons to be performed between analog signals without necessarily requiring A/D conversion. See section 50, High-Speed Analog Comparator (ACMPHS) in User's Manual.

Table 1.10 Human machine interfaces

Feature	Functional description
Capacitive Touch Sensing Unit (CTSU)	The Capacitive Touch Sensing Unit (CTSU) measures the electrostatic capacitance of the touch sensor. Changes in the electrostatic capacitance are determined by the software, which enables the CTSU to detect whether a finger is in contact with the touch sensor. The electrode surface of the touch sensor is usually enclosed with an electrical insulator so that fingers do not come into direct contact with the electrodes. See section 51, Capacitive Touch Sensing Unit (CTSU) in User's Manual.

Table 1.11 Graphics

Feature	Functional description
Graphics LCD Controller (GLCDC)	The Graphics LCD Controller (GLCDC) provides multiple functions and supports various data formats and panels. Key GLCDC features include: • GPX bus master function for accessing graphics data • Superimposition of three planes (single color background plane, graphic 1 plane, and graphic 2 plane) • Support for many types of 32-bit or 16-bit per pixel graphics data and 8-bit, 4-bit, or 1-bit LUT data format • Digital interface signal output supporting a video image size of WVGA or greater. See section 58, Graphics LCD Controller (GLCDC) in User's Manual.
2D Drawing Engine (DRW)	The 2D Drawing Engine (DRW) provides flexible functions that can support almost any object geometry rather than being bound to only a few specific geometries such as lines, triangles, or circles. The edges of every object can be independently blurred or antialiased. Rasterization is executed at one pixel per clock on the bounding box of the object from left to right and top to bottom. The DRW can also raster from bottom to top to optimize the performance in certain cases. In addition, optimization methods are available to avoid rasterization of many empty pixels of the bounding box. The distances to the edges of the object are calculated by a set of edge equations for every pixel of the bounding box. These edge equations can be combined to describe the entire object. If a pixel is inside the object, it is selected for rendering. If it is outside, it is discarded. If it is on the edge, an alpha value can be chosen proportional to the distance of the pixel to the nearest edge for antialiasing. Every pixel that is selected for rendering can be textured. The resulting aRGB quadruple can be modified by a general raster operation approach independently for each of the four channels. The aRGB quadruples can then be blended with one of the multiple blend modes of the DRW. The DRW provides two inputs (texture read and framebuffer read), and one output (framebuffer write). The internal color format is always aRGB (8888). The color formats from the inputs are converted to the internal format on read and a conversion back is made on write. See section 56, 2D Drawing Engine (DRW) in User's Manual.
JPEG Codec (JPEG)	The JPEG Codec (JPEG) incorporates a JPEG codec that conforms to the JPEG baseline compression and decompression standard. This provides high-speed compression of image data and high-speed decoding of JPEG data. See section 57, JPEG Codec in User's Manual.
Parallel Data Capture (PDC) unit	One Parallel Data Capture (PDC) unit is provided for communicating with external I/O devices, including image sensors, and transferring parallel data such as an image output from the external I/O device through the DTC or DMAC to the on-chip SRAM and external address spaces (the CS and SDRAM areas). See section 44, Parallel Data Capture Unit (PDC) in User's Manual.

Table 1.12 Data processing (1 of 2)

Feature	Functional description
Cyclic Redundancy Check (CRC) calculator	The Cyclic Redundancy Check (CRC) calculator generates CRC codes to detect errors in the data. The bit order of CRC calculation results can be switched for LSB-first or MSB-first communication. Additionally, various CRC-generating polynomials are available. The snoop function allows monitoring reads from and writes to specific addresses. This function is useful in applications that require CRC code to be generated automatically in certain events, such as monitoring writes to the serial transmit buffer and reads from the serial receive buffer. See section 40, Cyclic Redundancy Check (CRC) Calculator in User's Manual.

Table 1.12 Data processing (2 of 2)

Feature	Functional description
Data Operation Circuit (DOC)	The Data Operation Circuit (DOC) compares, adds, and subtracts 16-bit data. See section 52, Data Operation Circuit (DOC) in User's Manual.
Sampling Rate Converter (SRC)	The Sampling Rate Converter (SRC) converts the sampling rate of data produced by various audio decoders, such as the WMA, MP3, and AAC. Both 16-bit stereo and monaural data are supported. See section 42, Sampling Rate Converter (SRC) in User's Manual.

Table 1.13 Security

Feature	Functional description
Secure Crypto Engine 7 (SCE7)	• Security algorithms: - Symmetric algorithms: AES, 3DES, and ARC4 - Asymmetric algorithms: RSA, DSA, and ECC. • Other support features: - TRNG (True Random Number Generator) - Hash-value generation: SHA1, SHA224, SHA256, GHASH, and MD5 - 128-bit unique ID.

1.2 Block Diagram

Figure 1.1 shows the block diagram of the MCU superset, some individual devices within the group have a subset of the features.

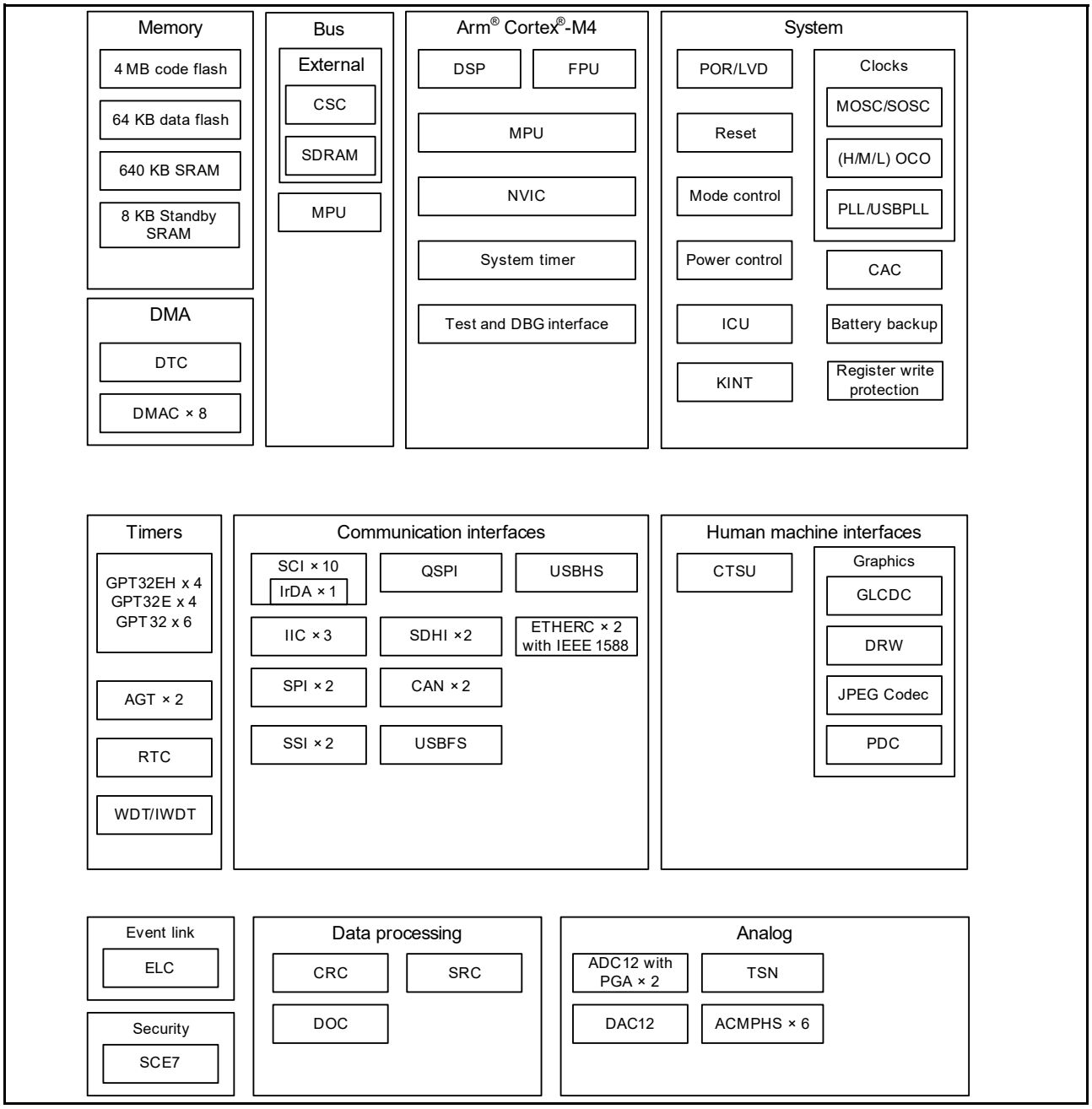

Figure 1.1 Block diagram

1.3 Part Numbering

Figure 1.2 shows product part number information, including memory capacity and package type. Table 1.14 shows a list of products.

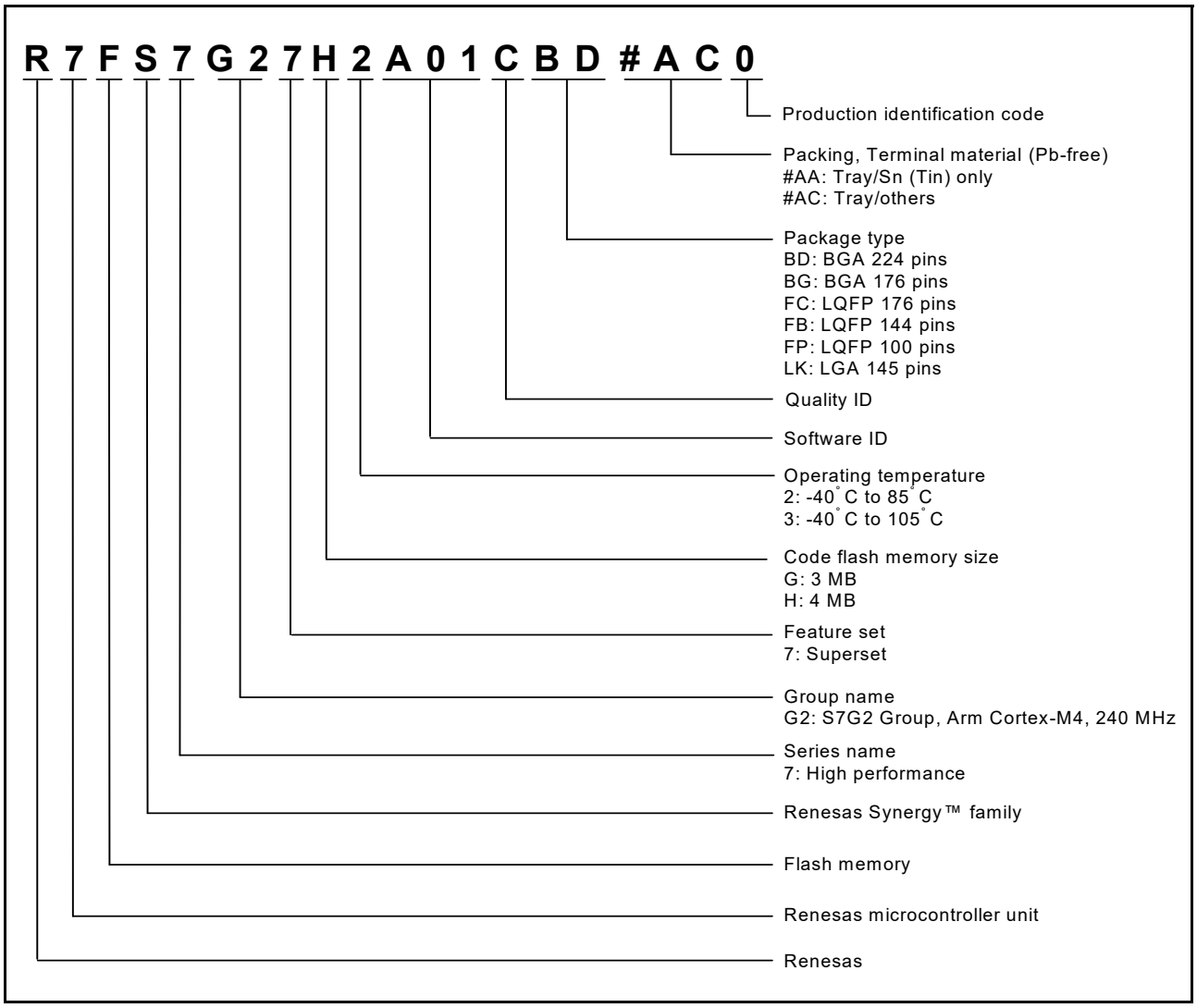

Figure 1.2 Part numbering scheme

Table 1.14 Product list

Part number	Orderable part number	Package	Code flash	Data flash	SRAM	Operating temperature
R7FS7G27H2A01CBD	R7FS7G27H2A01CBD#AC0	PLBG0224GA-A	4 MB	64 KB	640 KB	-40 to +85°C
R7FS7G27H2A01CBG	R7FS7G27H2A01CBG#AC0	PLBG0176GE-A				-40 to +85°C
R7FS7G27H3A01CFC	R7FS7G27H3A01CFC#AA0	PLQP0176KB-A				-40 to +105°C
R7FS7G27H2A01CLK	R7FS7G27H2A01CLK#AC0	PTLG0145KA-A				-40 to +85°C
R7FS7G27H3A01CFB	R7FS7G27H3A01CFB#AA0	PLQP0144KA-B				-40 to +105°C
R7FS7G27G2A01CBD	R7FS7G27G2A01CBD#AC0	PLBG0224GA-A	3 MB			-40 to +85°C
R7FS7G27G2A01CBG	R7FS7G27G2A01CBG#AC0	PLBG0176GE-A				-40 to +85°C
R7FS7G27G3A01CFC	R7FS7G27G3A01CFC#AA0	PLQP0176KB-A				-40 to +105°C
R7FS7G27G2A01CLK	R7FS7G27G2A01CLK#AC0	PTLG0145KA-A				-40 to +85°C
R7FS7G27G3A01CFB	R7FS7G27G3A01CFB#AA0	PLQP0144KA-B				-40 to +105°C
R7FS7G27G3A01CFP	R7FS7G27G3A01CFP#AA0	PLQP0100KB-B				-40 to +105°C

1.4 Function Comparison

Table 1.15 Functional comparison

Function			Part numbers					
			R7FS7G27H2A01CBD/ R7FS7G27G2A01CBD	R7FS7G27H2A01CBG/ R7FS7G27G2A01CBG	R7FS7G27H3A01CFC/ R7FS7G27G3A01CFC	R7FS7G27H2A01CLK/ R7FS7G27G2A01CLK	R7FS7G27H3A01CFB/ R7FS7G27G3A01CFB	R7FS7G27G3A01CFP
Pin count			224	176	176	145	144	100
Package			BGA	BGA	LQFP	LGA	LQFP	LQFP
Code flash memory			4/3 MB					3 MB
Data flash memory			64 KB					
SRAM			640 KB					
		Parity	608 KB					
		DED	32 KB					
Standby SRAM			8 KB					
System		CPU clock	240 MHz					
		Backup registers	512 bytes					
		ICU	Yes					
		KINT	8					
Event link		ELC	Yes					
DMA		DTC	Yes					
		DMAC	8					
BUS		External bus	16-bit bus					8-bit bus
		SDRAM	Yes					No
Timers		GPT32EH	4	4	4	4	4	4
		GPT32E	4	4	4	4	4	3
		GPT32	6	6	6	6	6	5
		AGT	2	2	2	2	2	2
		RTC	Yes					
		WDT/IWDT	Yes					
Communication		SCI	10					
		IIC	3					2
		SPI	2					
		SSI	2					1
		QSPI	1					Dual-SPI 1
		SDHI	2					
		CAN	2					
		USBFS	Yes					
		USBHS	Yes			No		
		ETHERC	2					1
Analog		ADC12	25	21	21	19	19	16
		DAC12	2					
		ACMPHS	6					
		TSN	Yes					
HMI		CTSU	18	12	12	18		12
		KINT	8					
	Graphics	GLCDC	RGB888					RGB565
		DRW	Yes					
		JPEG	Yes					
		PDC	Yes					No
Data processing		CRC	Yes					
		DOC	Yes					
		SRC	Yes					
Security			SCE7					

1.5 Pin Functions

Table 1.16 Pin functions (1 of 5)

Function	Signal	I/O	Description
Power supply	VCC	Input	Power supply pin. Connect this pin to the system power supply. Connect it to VSS through a 0.1-μF capacitor. Place the capacitor close to the pin.
	VCC_DCDC	Input	Switching regulator power supply pin.
	VLO	I/O	Switching regulator pin.
	VCL0 to VCL2	Input	Connect this pin to VSS through a smoothing capacitor used to stabilize the internal power supply. Place the capacitor close to the pin.
	VCL_F	Input	
	VSS	Input	Ground pin. Connect to the system power supply (0 V).
	VBATT	Input	Backup power pin
Clock	XTAL	Output	Pins for a crystal resonator. An external clock signal can be input through the EXTAL pin.
	EXTAL	Input	
	XCIN	Input	Input/output pins for the sub-clock oscillator. Connect a crystal resonator between XCOUT and XCIN.
	XCOUT	Output	
	EBCLK	Output	Outputs the external bus clock for external devices
	SDCLK	Output	Outputs the SDRAM-dedicated clock
	CLKOUT	Output	Clock output pin
Operating mode control	MD	Input	Pin for setting the operating mode. The signal level on this pin must not be changed during operation mode transition on release from the reset state.
System control	RES	Input	Reset signal input pin. The MCU enters the reset state when this signal goes low.
CAC	CACREF	Input	Measurement reference clock input pin
Interrupt	NMI	Input	Non-maskable interrupt request pin
	IRQ0 to IRQ15	Input	Maskable interrupt request pins
KINT	KR00 to KR07	Input	A key interrupt can be generated by inputting a falling edge to the key interrupt input pins
On-chip emulator	TMS	I/O	On-chip emulator or boundary scan pins
	TDI	Input	
	TCK	Input	
	TDO	Output	
	TCLK	Output	This pin outputs the clock for synchronization with the trace data
	TDATA0 to TDATA3	Output	Trace data output
	SWDIO	I/O	Serial wire debug data input/output pin
	SWCLK	Input	Serial wire clock pin
	SWO	Output	Serial wire trace output pin
External bus interface	RD	Output	Strobe signal indicating that reading from the external bus interface space is in progress, active-low
	WR	Output	Strobe signal indicating that writing to the external bus interface space is in progress, in 1-write strobe mode, active-low
	WR0, WR1	Output	Strobe signals indicating that either group of data bus pins (D07 to D00 or D15 to D08) is valid in writing to the external bus interface space, in byte strobe mode, active-low
	BC0, BC1	Output	Strobe signals indicating that either group of data bus pins (D07 to D00 or D15 to D08) is valid in access to the external bus interface space, in 1-write strobe mode, active-low
	WAIT	Input	Input pin for wait request signals in access to the external space, active-low
	CS0 to CS7	Output	Select signals for CS areas, active-low
	A00 to A23	Output	Address bus
	D00 to D15	I/O	Data bus

Table 1.16 Pin functions (2 of 5)

Function	Signal	I/O	Description
SDRAM interface	CKE	Output	SDRAM clock enable signal
	SDCS	Output	SDRAM chip select signal, active-low
	RAS	Output	SDRAM low address strobe signal, active-low
	CAS	Output	SDRAM column address strobe signal, active-low
	WE	Output	SDRAM write enable signal, active-low
	DQM0	Output	SDRAM I/O data mask enable signal for DQ07 to DQ00
	DQM1	Output	SDRAM I/O data mask enable signal for DQ15 to DQ08
	A00 to A15	Output	Address bus
	DQ00 to DQ15	I/O	Data bus
GPT	GTETRGA, GTETRGB, GTETRGC, GTETRGD	Input	External trigger input pins
	GTIOC0A to GTIOC13A, GTIOC0B to GTIOC13B	I/O	Input capture, output compare, or PWM output pins.
	GTIU	Input	Hall sensor input pin U
	GTIV	Input	Hall sensor input pin V
	GTIW	Input	Hall sensor input pin W
	GTOUUP	Output	3-phase PWM output for BLDC motor control (positive U phase)
	GTOULO	Output	3-phase PWM output for BLDC motor control (negative U phase)
	GTOVUP	Output	3-phase PWM output for BLDC motor control (positive V phase)
	GTOVLO	Output	3-phase PWM output for BLDC motor control (negative V phase)
	GTOWUP	Output	3-phase PWM output for BLDC motor control (positive W phase)
	GTOWLO	Output	3-phase PWM output for BLDC motor control (negative W phase)
AGT	AGTEE0, AGTEE1	Input	External event input enable signals
	AGTIO0, AGTIO1	I/O	External event input and pulse output pins
	AGTO0, AGTO1	Output	Pulse output pins
	AGTOA0, AGTOA1	Output	Output compare match A output pins
	AGTOB0, AGTOB1	Output	Output compare match B output pins
RTC	RTCOUT	Output	Output pin for 1-Hz or 64-Hz clock
	RTCIC0 to RTCIC2	Input	Time capture event input pins
SCI	SCK0 to SCK9	I/O	Input/output pins for the clock (clock synchronous mode)
	RXD0 to RXD9	Input	Input pins for received data (asynchronous mode/clock synchronous mode)
	TXD0 to TXD9	Output	Output pins for transmitted data (asynchronous mode/clock synchronous mode)
	CTS0_RTS0 to CTS9_RTS9	I/O	Input/output pins for controlling the start of transmission and reception (asynchronous mode/clock synchronous mode), active-low
	SCL0 to SCL9	I/O	Input/output pins for the clock (simple IIC mode)
	SDA0 to SDA9	I/O	Input/output pins for the data (simple IIC mode)
	SCK0 to SCK9	I/O	Input/output pins for the clock (simple SPI mode)
	MISO0 to MISO9	I/O	Input/output pins for slave transmission of data (simple SPI mode)
	MOSI0 to MOSI9	I/O	Input/output pins for master transmission of data (simple SPI mode)
	SS0 to SS9	Input	Chip-select input pins (simple SPI mode), active-low
IIC	SCL0 to SCL2	I/O	Input/output pins for the clock
	SDA0 to SDA2	I/O	Input/output pins for data
SSI	SSISCK0	I/O	SSI serial bit clock pin
	SSISCK1		
	SSIWS0	I/O	Word select pins
	SSIWS1		
	SSITXD0	Output	Serial data output pins
	SSIRXD0	Input	Serial data input pins
	SSIDATA1	I/O	Serial data input/output pins
	AUDIO_CLK	Input	External clock pin for audio (input oversampling clock)

Table 1.16 Pin functions (3 of 5)

Function	Signal	I/O	Description
SPI	RSPCKA, RSPCKB	I/O	Clock input/output pin
	MOSIA, MOSIB	I/O	Input or output pins for data output from the master
	MISOA, MISOB	I/O	Input or output pins for data output from the slave
	SSLA0, SSLB0	I/O	Input or output pin for slave selection
	SSLA1 to SSLA3, SSLB1 to SSLB3	Output	Output pins for slave selection
QSPI	QSPCLK	Output	QSPI clock output pin
	QSSL	Output	QSPI slave output pin
	QIO0 to QIO3	I/O	Data0 to Data3
CAN	CRX0, CRX1	Input	Receive data
	CTX0, CTX1	Output	Transmit data
USBFS	VCC_USB	Input	Power supply pins
	VSS_USB	Input	Ground pins
	USB_DP	I/O	D+ I/O pin of the USB on-chip transceiver. Connect this pin to the D+ pin of the USB bus
	USB_DM	I/O	D- I/O pin of the USB on-chip transceiver. Connect this pin to the D- pin of the USB bus
	USB_VBUS	Input	USB cable connection monitor pin. Connect this pin to VBUS of the USB bus. The VBUS pin status (connected or disconnected) can be detected when the USB module is operating as a function controller.
	USB_EXICEN	Output	Low-power control signal for external power supply (OTG) chip
	USB_VBUSEN	Output	VBUS (5 V) supply enable signal for external power supply chip
	USB_OVRCURA, USB_OVRCURB	Input	Connect the external overcurrent detection signals to these pins. Connect the VBUS comparator signals to these pins when the OTG power supply chip is connected.
	USB_ID	Input	Connect the MicroAB connector ID input signal to this pin during operation in OTG mode
USBHS	VCC_USBHS	Input	Power supply pin
	VSS1_USBHS	Input	Ground pin
	VSS2_USBHS	Input	Ground pin
	AVCC_USBHS	Input	Analog power supply pin for the USBHS
	AVSS_USBHS	Input	Analog ground pin for the USBHS. Must be shorted to the PVSS_USBHS pin.
USBHS	PVSS_USBHS	Input	PLL circuit ground pin for the USBHS. Must be shorted to the AVSS_USBHS pin.
	USBHS_RREF	I/O	USBHS reference current source pin. Connect this pin to the AVSS_USBHS pin through a 2.2-kΩ resistor (±1%).
	USBHS_DP	I/O	USB bus D+ data pin
	USBHS_DM	I/O	USB bus D- data pin
	USBHS_EXICEN	Output	Connect this pin to the OTG power supply IC
	USBHS_ID	Input	Connect this pin to the OTG power supply IC
	USBHS_VBUSEN	Output	VBUS power enable signal for USB
	USBHS_OVRCURA, USBHS_OVRCURB	Input	Overcurrent pin for USB
	USBHS_VBUS	Input	USB cable connection monitor input pin

Table 1.16 Pin functions (4 of 5)

Function	Signal	I/O	Description
ETHERC	REF50CK0, REF50CK1	Input	50-MHz reference clocks. These pins input reference signals for transmission/reception timing in RMII mode.
	RMII0_CRS_DV, RMII1_CRS_DV	Input	Indicate carrier detection signals and valid receive data on RMII_RXD1 and RMII_RXD0 in RMII mode
	RMII0_TXD0, RMII0_TXD1, RMII1_TXD0, RMII1_TXD1	Output	2-bit transmit data in RMII mode
	RMII0_RXD0, RMII0_RXD1, RMII1_RXD0, RMII1_RXD1	Input	2-bit receive data in RMII mode
	RMII0_TXD_EN, RMII1_TXD_EN	Output	Output pins for data transmit enable signals in RMII mode
	RMII0_RX_ER, RMII1_RX_ER	Input	Indicate an error occurred during reception of data in RMII mode
	ET0_CRS, ET1_CRS	Input	Carrier detection/data reception enable signals
	ET0_RX_DV, ET1_RX_DV	Input	Indicate valid receive data on ETn_ERXD3 to ETn_ERXD0 (n = 0, 1)
	ET0_EXOUT, ET1_EXOUT	Output	General-purpose external output pins
	ET0_LINKSTA, ET1_LINKSTA	Input	Input link status from the PHY-LSI
	ET0_ETXD0 to ET0_ETXD3, ET1_ETXD0 to ET1_ETXD3	Output	4 bits of MII transmit data
	ET0_ERXD0 to ET0_ERXD3, ET1_ERXD0 to ET1_ERXD3	Input	4 bits of MII receive data
	ET0_TX_EN, ET1_TX_EN	Output	Transmit enable signals. Function as signals indicating that transmit data is ready on ETn_ETXD3 to ETn_ETXD0 (n = 0, 1).
	ET0_TX_ER, ET1_TX_ER	Output	Transmit error pins. Function as signals notifying the PHY_LSI of an error during transmission.
	ET0_RX_ER, ET1_RX_ER	Input	Receive error pins. Function as signals to recognize an error during reception.
	ET0_TX_CLK, ET1_TX_CLK	Input	Transmit clock pins. These pins input reference signals for output timing from ETn_TX_EN, ETn_ETXD3 to ETn_ETXD0, and ETn_TX_ER (n = 0, 1).
	ET0_RX_CLK, ET1_RX_CLK	Input	Receive clock pins. These pins input reference signals for input timing to ETn_RX_DV, ETn_ERXD3 to ETn_ERXD0, and ETn_RX_ER (n = 0, 1).
	ET0_COL, ET1_COL	Input	Input collision detection signals
	ET0_WOL, ET1_WOL	Output	Receive Magic packets
	ET0_MDC, ET1_MDC	Output	Output reference clock signals for information transfer through ETn_MDIO (n = 0, 1)
ETHERC	ET0_MDIO, ET1_MDIO	I/O	Input or output bidirectional signals for exchange of management data with PHY-LSI
SDHI	SD0CLK, SD1CLK	Output	SD clock output pins
	SD0CMD, SD1CMD	I/O	Command output pin and response input signal pins
	SD0DAT0 to SD0DAT7, SD1DAT0 to SD1DAT7	I/O	SD and MMC data bus pins
	SD0CD, SD1CD	Input	SD card detection pins
	SD0WP, SD1WP	Input	SD write-protect signals

Table 1.16 Pin functions (5 of 5)

Function	Signal	I/O	Description
Analog power supply	AVCC0	Input	Analog voltage supply pin. Connect this pin to VCC.
	AVSS0	Input	Analog ground pin. Connect this pin to VSS.
	VREFH0	Input	Analog reference voltage supply pin for the ADC12. Connect this pin to VCC when not using the ADC12.
	VREFL0	Input	Analog reference ground pin for the ADC12. Connect this pin to VSS when not using the ADC12.
	VREFH	Input	Reference voltage input pin for the ADC12 (unit 1) and D/A converter. This is used as the analog power supply for the respective modules. Connect this pin to VCC if the ADC12 (unit 1) or DAC12 is not in use.
	VREFL	Input	Reference ground pin for the ADC12 and D/A converter. This is used as the analog ground for the respective modules. Set this pin to the same potential as the VSS pin.
ADC12	AN000 to AN006, AN016 to AN021	Input	Input pins for the analog signals to be processed by the ADC12
	AN100 to AN106, AN116 to AN120	Input	
	ADTRG0	Input	Input pins for the external trigger signals that start the A/D conversion, active-low
	ADTRG1	Input	
	PGAVSS000/PGAVSS100	Input	Differential input pins
DAC12	DA0, DA1	Output	Output pins for the analog signals processed by the D/A converter
ACMPHS	VCOUT	Output	Comparator output pin
	IVREF0 to IVREF3	Input	Reference voltage input pin for comparator
	IVCMP0 to IVCMP2	Input	Analog voltage input pins for comparator
CTSU	TS00 to TS17	Input	Capacitive touch detection pins (touch pins)
	TSCAP	-	Secondary power supply pin for the touch driver
I/O ports	P000 to P007	Input	General-purpose input pins
	P008 to P011, P014, P015	I/O	General-purpose input/output pins
	P100 to P115	I/O	General-purpose input/output pins
	P200	Input	General-purpose input pin
	P201 to P207, P212, P213	I/O	General-purpose input/output pins
	P300 to P315	I/O	General-purpose input/output pins
	P400 to P415	I/O	General-purpose input/output pins
	P500 to P515	I/O	General-purpose input/output pins
	P600 to P615	I/O	General-purpose input/output pins
	P700 to P713	I/O	General-purpose input/output pins
	P800 to P813	I/O	General-purpose input/output pins
	P900 to P915	I/O	General-purpose input/output pins
	PA00 to PA15	I/O	General-purpose input/output pins
	PB00 to PB07	I/O	General-purpose input/output pins
GLCDC	LCD_DATA00 to LCD_DATA23	Output	Data output pins for panel
	LCD_TCON0 to LCD_TCON3	Output	Output pins for panel timing adjustment
	LCD_CLK	Output	Panel clock output pin
	LCD_EXTCLK	Input	Panel clock source input pin
PDC	PIXCLK	Input	Image transfer clock pin
	VSYNC	Input	Vertical synchronization signal pin
	HSYNC	Input	Horizontal synchronization signal pin
	PIXD0 to PIXD7	Input	8-bit image data pins
	PCKO	Output	Output pin for dot clock

1.6 Pin Assignments

Figure 1.3 to Figure 1.8 show the pin assignments.

R7FS7G2xxxA01CBD

	A	B	C	D	E	F	G	H	J	K	L	M	N	P	R	
15	P407	P408	P410	P708	VSS	USBHS_DM	PVSS_USBHS	P212/EXTAL	XCIN	VCL0	P707	P701	P403	P401	P511	15
14	USB_DP	USB_DM	P409	P411	P415	USBHS_DP	AVSS_USBHS	P213/XTAL	XCOUT	VBATT	P706	P700	P402	P514	P512	14
13	VCC_USB	VSS_USB	P207	P412	P709	VCC_USBHS	USBHS_RREF	AVCC_USBHS	VSS	PB01	P705	P405	P400	P513	P805	13
12	P202	P203	P205	P413	P711	VSS1_USBHS	VSS2_USBHS	VCC	PB05	PB03	VCC	P806	P002	P807	P000	12
11	P902	P901	P315	P204	P414	P712	PB07	PB06	PB02	P702	VSS	P004	P008	P001	P005	11
10	VCL1	VSS	VSS	VCC	P313	P710	P713	PB04	P704	P404	P003	P010	P011	P006	P009	10
9	VLO	VLO	P904	P903	P900	P314	P206	PB00	P406	P515	P007	P014	AVSS0	VREFL0	VREFH0	9
8	VCC_DCDC	P200	P201/MD	P910	P909	RES	P615	P913	P703	P809	VSS	P015	VREFL	AVCC0	VREFH	8
7	P911	P912	P311	P308	P908	P907	PA08	PA13	PA00	P808	VCC	P508	P510	VCC	VSS	7
6	P905	P312	P310	P307	P915	P906	PA11	PA02	PA01	P606	P812	P506	P507	P509	VCL2	6
5	VSS	VCC	P309	P306	P914	P300/TCK/SWCLK	PA12	PA10	PA03	P607	P811	P505	P502	P503	P504	5
4	VSS	VCC	P304	P305	P114	P608	P609	PA09	PA04	P107	P106	P804	P501	P803	P500	4
3	P303	P301	P112	P113	P115	P613	PA14	VCC	PA05	P603	P600	P105	P104	P810	P802	3
2	P302	P108/TMS/SWDIO	P110/TDI	VSS	P611	P612	PA15	VSS	PA06	P604	P601	VCC	P103	P800	P801	2
1	NC	P109/TDO	P111	VCC	P610	P614	P813	VCL_F	PA07	P605	P602	VSS	P102	P101	P100	1
	A	B	C	D	E	F	G	H	J	K	L	M	N	P	R	

Figure 1.3 Pin assignment for 224-pin BGA (top view)

R7FS7G2xxxA01CBG

	A	B	C	D	E	F	G	H	J	K	L	M	N	P	R	
15	P407	P409	P411	P414	VSS	USBHS_DM	PVSS_USBHS	P212/EXTAL	XCIN	VCL0	P707	P703	P700	P405	P401	15
14	USB_DP	USB_DM	P410	P412	P415	USBHS_DP	AVSS_USBHS	P213/XTAL	XCOUT	VBATT	P706	P701	P406	P402	P512	14
13	P204	VCC_USB	VSS_USB	P408	P413	VCC_USBHS	USBHS_RREF	AVCC_USBHS	VSS	PB01	P704	P404	P400	P511	P805	13
12	P313	P202	P207	P206	P205	VSS1_USBHS	VSS2_USBHS	VCC	PB00	P705	P702	P403	P513	P806	P000	12
11	P900	P315	P314	P203								VCC	P001	P004	P002	11
10	VCL1	VSS	P901	VSS								VSS	P006	P008	P005	10
9	VLO	VLO	RES	VCC								P009	AVSS0	VREFL0	VREFH0	9
8	VCC_DCDC	P201/MD	P200	P908								P010	AVCC0	VREFL	VREFH	8
7	P906	P905	P312	P907								VCC	VSS	P015	P014	7
6	P310	P309	P307	P311								P007	P507	P505	VCL2	6
5	P308	P305	VSS	VCC								P003	P503	P504	P506	5
4	P306	P304	P300/TCK/SWCLK	P111	VSS	P613	PA09	PA00	P607	VCC	VSS	VSS	VCC	P501	P502	4
3	P303	P302	P108/TMS SWDIO	P110/TDI	VCC	P610	VCC	VSS	P604	P603	P105	P102	P800	P804	P500	3
2	P301	P112	P114	P608	P611	P614	PA10	PA01	P605	P601	P107	P104	P101	P802	P803	2
1	P109/TDO	P113	P115	P609	P612	P615	PA08	VCL_F	P606	P602	P600	P106	P103	P100	P801	1
	A	B	C	D	E	F	G	H	J	K	L	M	N	P	R	

Figure 1.4 Pin assignment for 176-pin BGA (top view)

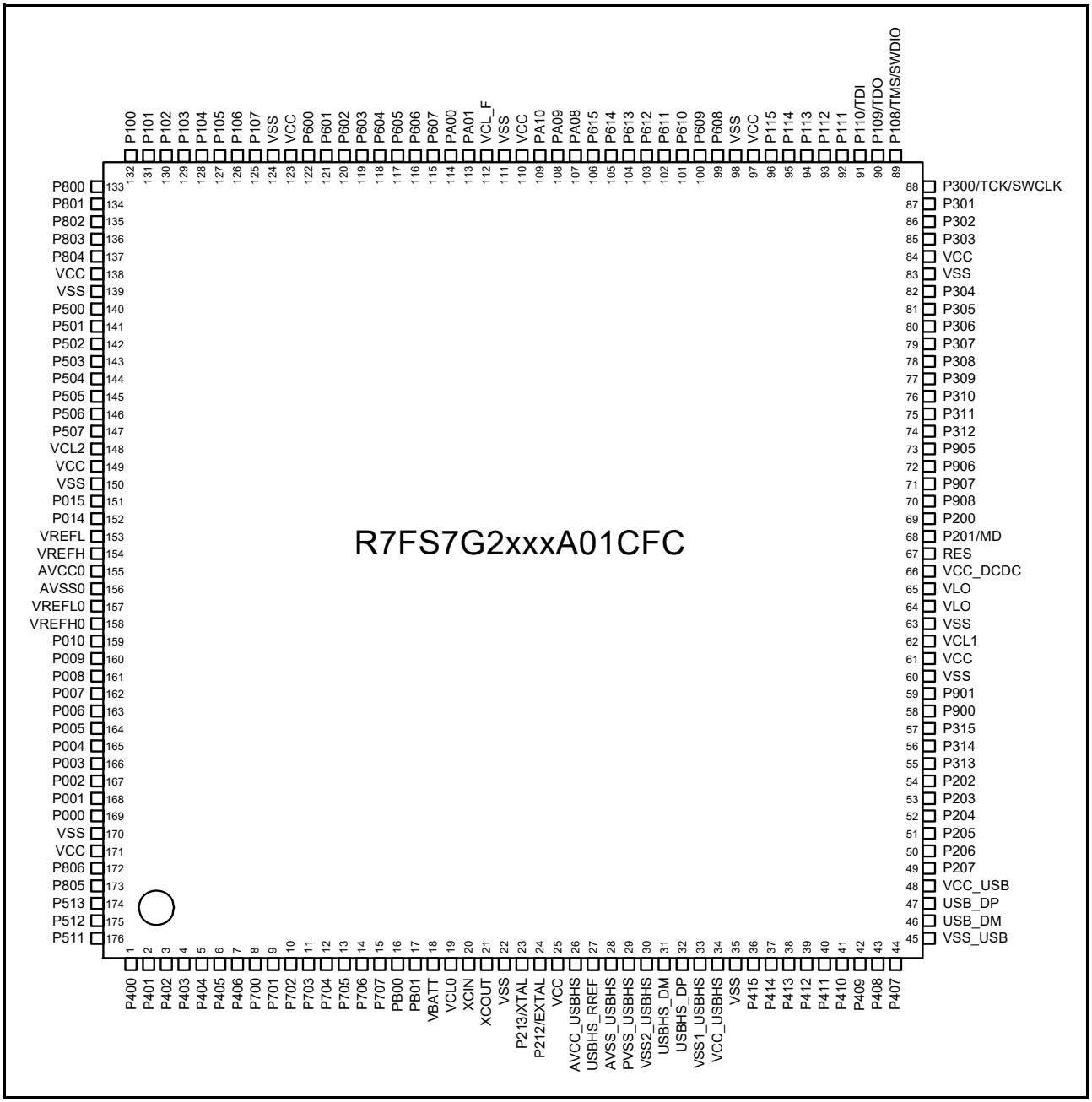

Figure 1.5 Pin assignment for 176-pin LQFP (top view)

R7FS7G2xxxA01CLK

	A	B	C	D	E	F	G	H	J	K	L	M	N	
13	P407	P409	P412	P708	P711	VCC	P212 /EXTAL	XCIN	VCL0	P702	P405	P402	P400	13
12	USB_DM	USB_DP	P410	P414	P710	VSS	P213 /XTAL	XCOUT	VBATT	P701	P404	P511	VCC	12
11	VCC_ USB	VSS_ USB	P207	P411	P415	P712	P705	P704	P703	P403	P401	P512	VSS	11
10	P205	P206	P204	P408	P413	P709	P713	P700	P406	P003	P000	P002	P001	10
9	P203	P313	P202	VSS						P004	P006	P009	P008	9
8	VCL1	VSS	P200	VCC						P005	AVSS0	VREFL0	VREFH0	8
7	VLO	VLO	RES	P310						P007	AVCC0	VREFL	VREFH	7
6	VCC_ DCDC	P201/MD	P312	P305						P505	P506	P015	P014	6
5	P309	P311	P308	P303	NC					P503	P504	VSS	VCC	5
4	P307	P306	P304	P109/TDO	P114	P608	P604	P600	P105	P500	P502	P501	VCL2	4
3	VSS	VCC	P301	P112	P115	P610	P614	P603	P107	P106	P104	VSS	VCC	3
2	P302	P300/TCK /SWCLK	P111	VCC	P609	P612	VSS	P605	P601	VCC	P800	P101	P801	2
1	P108/TMS /SWDIO	P110/TDI	P113	VSS	P611	P613	VCC	VCL_F	P602	VSS	P103	P102	P100	1
	A	B	C	D	E	F	G	H	J	K	L	M	N	

Figure 1.6 Pin assignment for 145-pin LGA (top view)

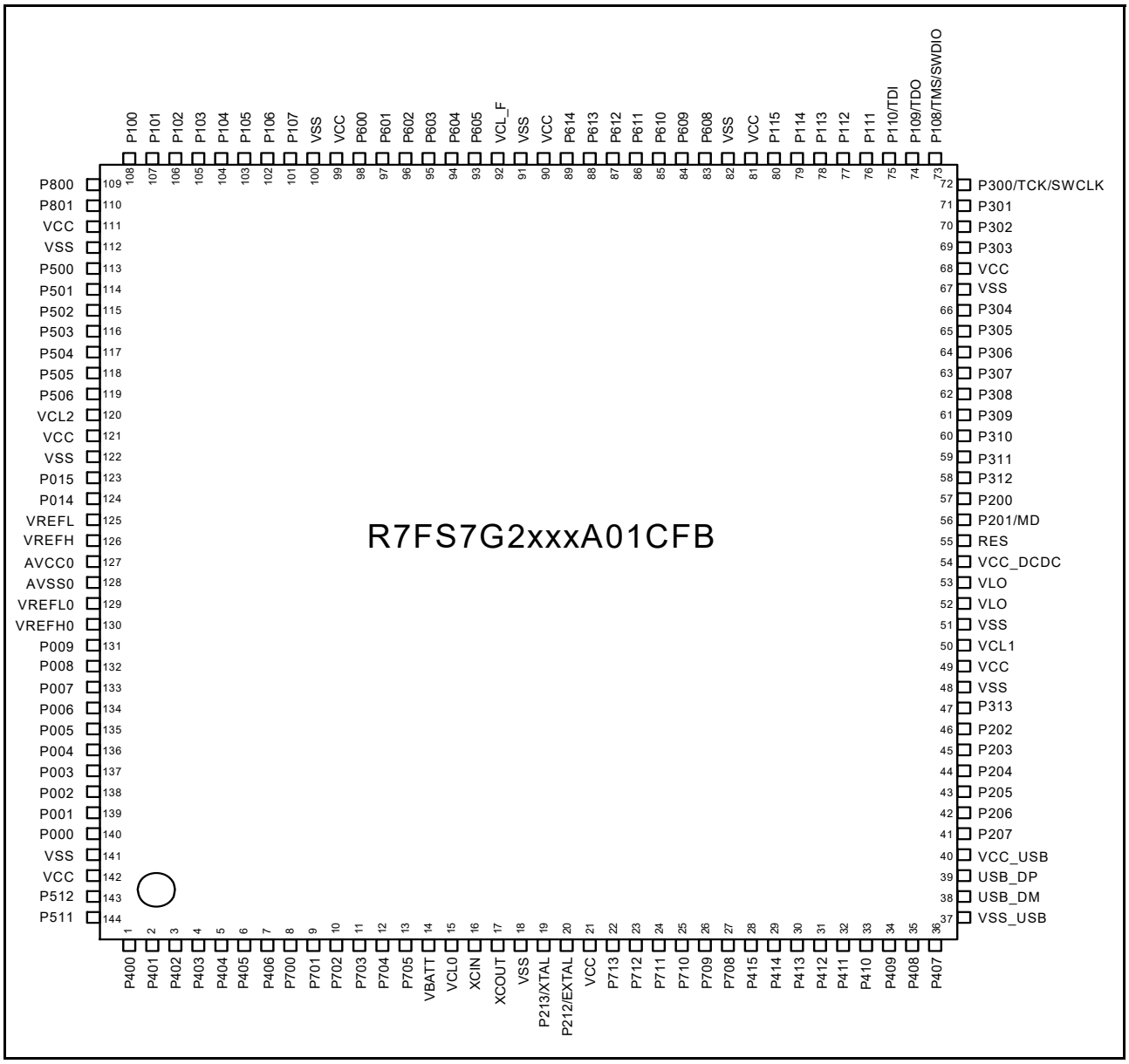

Figure 1.7 Pin assignment for 144-pin LQFP (top view)

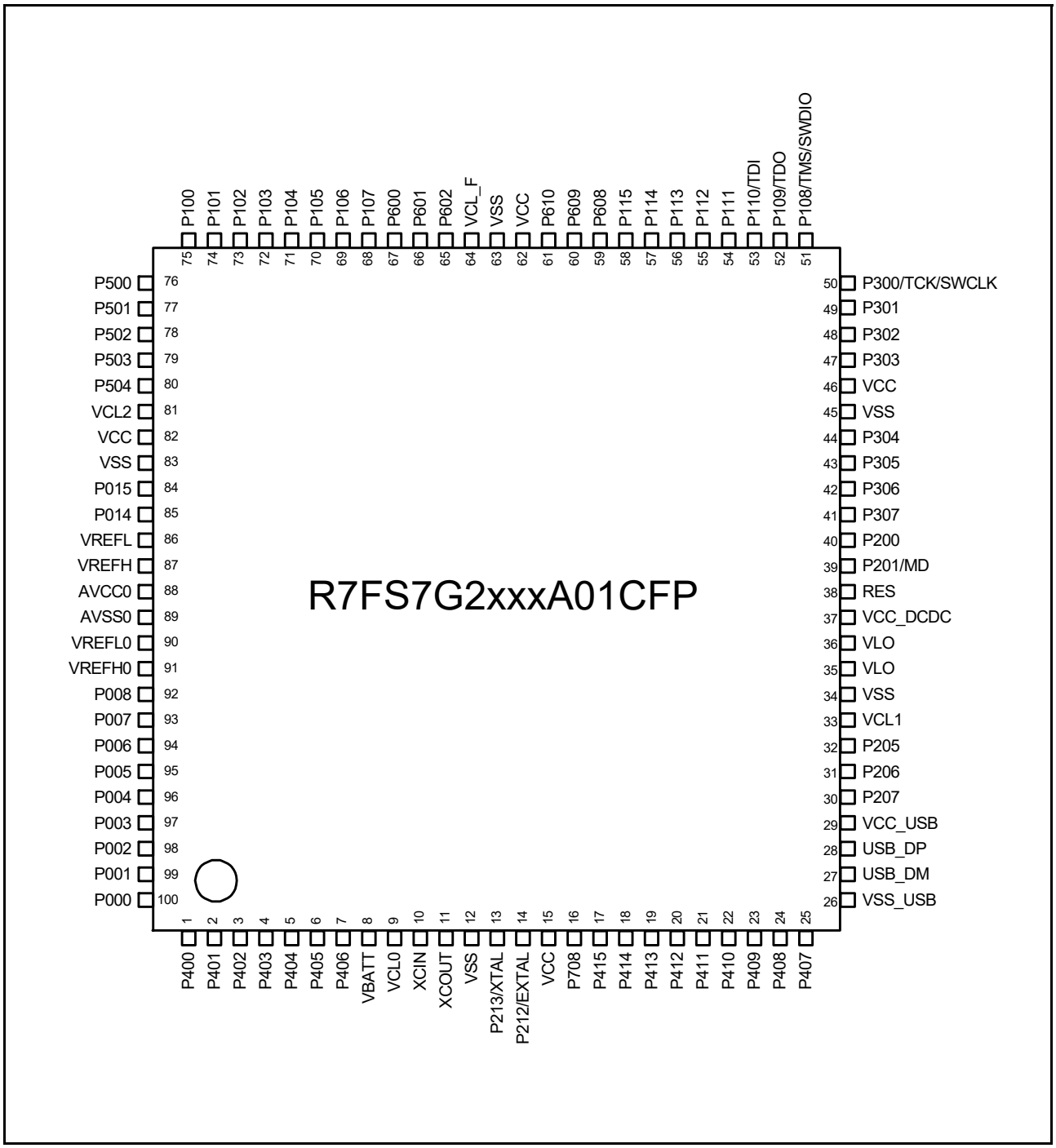

Figure 1.8 Pin assignment for 100-pin LQFP (top view)

1.7 Pin Lists

Table 1.17 Pin list (1 of 10)

Pin number						Power, System, CLK, Debug, CAC	Interrupt	I/O port	Extbus		Timers				Communication interfaces										Analog		HMI	
BGA224	BGA176	LQFP176	LGA145	LQFP144	LQFP100				External bus	SDRAM	AGT	GPT	GPT	RTC	USBFS, CAN	SCI0,2,4,6,8 (30 MHz)	SCI1,3,5,7,9 (30 MHz)	IIC	SPI, QSPI	SSI	MII (25 MHz)	RMII (50 MHz)	USBHS	SDHI	ADC12	DAC12, ACMPHS	CTSU	GLCDC, PDC
N13	N13	1	N13	1	1	-	IRQ0	P400	-	-	-	-	GTIOC6A_A	-	-	SCK4_B	SCK7_A	SCL0_A	-	AUDIO_CLK	ET1_TX_CLK	-	-	-	ADTRG1_B	-	-	-
P15	R15	2	L11	2	2	-	IRQ5-DS	P401	-	-	-	GTETRGA_B	GTIOC6B_A	-	CTX0_B	CTS4_RTS4_B/SS4_B	TXD7_A/MOSI7_A/SDA7_A	SDA0_A	-	-	ET0_MDC	ET0_MDC	-	-	-	-	-	-
N14	P14	3	M13	3	3	-	IRQ4-DS	P402	-	-	AGTIO0_B/AGTIO1_B	-	-	RTCIC0	CRX0_B	-	RXD7_A/MISO7_A/SCL7_A	-	-	-	ET0_MDIO	ET0_MDIO	-	-	-	-	-	-
N15	M12	4	K11	4	4	-	-	P403	-	-	AGTIO0_C/AGTIO1_C	-	GTIOC3A_B	RTCIC1	-	-	CTS7_RTS7_A/SS7_A	-	-	SSISCK0_A	ET1_MDC	ET1_MDC	-	-	-	-	-	PIXD7
K10	M13	5	L12	5	5	-	-	P404	-	-	-	-	GTIOC3B_B	RTCIC2	-	-	-	-	-	SSIWS0_A	ET1_MDIO	ET1_MDIO	-	-	-	-	-	PIXD6
M13	P15	6	L13	6	6	-	-	P405	-	-	-	-	GTIOC1A_B	-	-	-	-	-	-	SSITXD0_A	ET1_TX_EN	RMII1_TXD_EN	-	-	-	-	-	PIXD5
J9	N14	7	J10	7	7	-	-	P406	-	-	-	-	GTIOC1B_B	-	-	-	-	-	-	SSIRXD0_A	ET1_RX_ER	RMII1_TXD1	-	-	-	-	-	PIXD4
M14	N15	8	H10	8	-	-	-	P700	-	-	-	-	GTIOC5A_B	-	-	-	-	-	-	-	ET1_ETXD1	RMII1_TXD0	-	-	-	-	-	PIXD3
M15	M14	9	K12	9	-	-	-	P701	-	-	-	-	GTIOC5B_B	-	-	-	-	-	-	-	ET1_ETXD0	REF50CK1	-	-	-	-	-	PIXD2
K11	L12	10	K13	10	-	-	-	P702	-	-	-	-	GTIOC6A_B	-	-	-	-	-	-	-	ET1_ERXD1	RMII1_RXD0	-	-	-	-	-	PIXD1
J8	M15	11	J11	11	-	-	-	P703	-	-	-	-	GTIOC6B_B	-	-	-	-	-	-	-	ET1_ERXD0	RMII1_RXD1	-	-	-	-	-	PIXD0
J10	L13	12	H11	12	-	-	-	P704	-	-	-	-	-	-	-	-	-	-	-	-	ET1_RX_CLK	RMII1_RX_ER	-	-	-	-	-	HSYNC
L13	K12	13	G11	13	-	-	-	P705	-	-	-	-	-	-	-	-	-	-	-	-	ET1_CRS	RMII1_CRS_DV	-	-	-	-	-	PIXCLK
L14	L14	14	-	-	-	-	IRQ7	P706	-	-	-	-	-	-	-	-	RXD3_B/MISO3_B/SCL3_B	-	-	-	-	-	USBHS_OVRCURB	-	-	-	-	-
L15	L15	15	-	-	-	-	IRQ8	P707	-	-	-	-	-	-	-	-	TXD3_B/MOSI3_B/SDA3_B	-	-	-	-	-	USBHS_OVRCURA	-	-	-	-	-
H9	J12	16	-	-	-	-		PB00	-	-	-	-	-	-	-	-	SCK3_B	-	-	-	-	-	USBHS_VBUSEN	-	-	-	-	-
J11	-	-	-	-	-	-		PB02	-	-	-	-	-	-	-	CTS8_RTS8_B/SS8_B	-	-	-	-	ET1_RX_DV	-	-	-	-	-	-	-

Table 1.17 Pin list (2 of 10)

Pin number						Power, System, CLK, Debug, CAC	Interrupt	I/O port	Extbus		Timers				Communication interfaces										Analog		HMI	
BGA224	BGA176	LQFP176	LGA145	LQFP144	LQFP100				External bus	SDRAM	AGT	GPT	GPT	RTC	USBFS, CAN	SCI0,2,4,6,8 (30 MHz)	SCI1,3,5,7,9 (30 MHz)	IIC	SPI, QSPI	SSI	MII (25 MHz)	RMII (50 MHz)	USBHS	SDHI	ADC12	DAC12, ACMPHS	CTSU	GLCDC, PDC
K12	-	-	-	-	-	-		PB03	-	-	-	-	-	-	-	SCK8_B	-	-	-	-	ET1_COL	-	-	-	-	-	-	-
H10	-	-	-	-	-	-	IRQ12	PB04	-	-	-	-	-	-	-	TXD8_B/MOSI8_B/SDA8_B	-	-	-	-	ET1_ERXD2	-	-	-	-	-	-	-
K13	K13	17	-	-	-	-		PB01	-	-	-	-	-	-	-	-	CTS3_RTS3_B/SS3_B	-	-	-	-	-	USBHS_VBUS	-	-	-	-	-
J12	-	-	-	-	-	-	IRQ13	PB05	-	-	-	-	-	-	-	RXD8_B/MISO8_B/SCL8_B	-	-	-	-	ET1_ERXD3	-	-	-	-	-	-	-
H11	-	-	-	-	-	-	-	PB06	-	-	-	-	-	-	-		-	-	-	-	ET1_WOL	ET1_WOL	-	-	-	-	-	-
G11	-	-	-	-	-	-	-	PB07	-	-	-	-	-	-	-		-	-	-	-	ET1_LINKSTA	ET1_LINKSTA	-	-	-	-	-	-
K14	K14	18	J12	14	8	VBATT	-	-	-	-	-	-	-	-	-	-	-	-	-	-	-	-	-	-	-	-	-	-
K15	K15	19	J13	15	9	VCL0	-	-	-	-	-	-	-	-	-	-	-	-	-	-	-	-	-	-	-	-	-	-
J15	J15	20	H13	16	10	XCIN	-	-	-	-	-	-	-	-	-	-	-	-	-	-	-	-	-	-	-	-	-	-
J14	J14	21	H12	17	11	XCOUT	-	-	-	-	-	-	-	-	-	-	-	-	-	-	-	-	-	-	-	-	-	-
J13	J13	22	F12	18	12	VSS	-	-	-	-	-	-	-	-	-	-	-	-	-	-	-	-	-	-	-	-	-	-
H14	H14	23	G12	19	13	XTAL	IRQ2	P213	-	-	-	GTETRGC_A	-	-	-	-	TXD1_A/MOSI1_A/SDA1_A	-	-	-	-	-	-	-	ADTRG1_A	-	-	-
H15	H15	24	G13	20	14	EXTAL	IRQ3	P212	-	-	AGTEE1	GTETRGD_A	-	-	-	-	RXD1_A/MISO1_A/SCL1_A	-	-	-	-	-	-	-	-	-	-	-
H12	H12	25	F13	21	15	VCC	-	-	-	-	-	-	-	-	-	-	-	-	-	-	-	-	-	-	-	-	-	-
H13	H13	26	-	-	-	AVCC_USBHS	-	-	-	-	-	-	-	-	-	-	-	-	-	-	-	-	-	-	-	-	-	-
G13	G13	27	-	-	-	USBHS_RREF	-	-	-	-	-	-	-	-	-	-	-	-	-	-	-	-	-	-	-	-	-	-
G14	G14	28	-	-	-	AVSS_USBHS	-	-	-	-	-	-	-	-	-	-	-	-	-	-	-	-	-	-	-	-	-	-
G15	G15	29	-	-	-	PVSS_USBHS	-	-	-	-	-	-	-	-	-	-	-	-	-	-	-	-	-	-	-	-	-	-
G12	G12	30	-	-	-	VSS2_USBHS	-	-	-	-	-	-	-	-	-	-	-	-	-	-	-	-	-	-	-	-	-	-
F15	F15	31	-	-	-	-	-	-	-	-	-	-	-	-	-	-	-	-	-	-	-	-	USBHS_DM	-	-	-	-	-
F14	F14	32	-	-	-	-	-	-	-	-	-	-	-	-	-	-	-	-	-	-	-	-	USBHS_DP	-	-	-	-	-
F12	F12	33	-	-	-	VSS1_USBHS	-	-	-	-	-	-	-	-	-	-	-	-	-	-	-	-	-	-	-	-	-	-
F13	F13	34	-	-	-	VCC_USBHS	-	-	-	-	-	-	-	-	-	-	-	-	-	-	-	-	-	-	-	-	-	-
E15	E15	35	-	-	-	VSS	-	-	-	-	-	-	-	-	-	-	-	-	-	-	-	-	-	-	-	-		-

Table 1.17 Pin list (3 of 10)

Pin number						Power, System, CLK, Debug, CAC	Interrupt	I/O port	Extbus		Timers				Communication interfaces										Analog		HMI	
BGA224	BGA176	LQFP176	LGA145	LQFP144	LQFP100				External bus	SDRAM	AGT	GPT	GPT	RTC	USBFS, CAN	SCI0,2,4,6,8 (30 MHz)	SCI1,3,5,7,9 (30 MHz)	IIC	SPI, QSPI	SSI	MII (25 MHz)	RMII (50 MHz)	USBHS	SDHI	ADC12	DAC12, ACMPHS	CTSU	GLCDC, PDC
G10	-	-	G10	22	-	-	-	P713	-	-	-	-	GTIOC2A_B	-	-	-	-	-	-	-	ET1_EXOUT	ET1_EXOUT	-	-	-	-	TS17	-
F11	-	-	F11	23	-	-	-	P712	-	-	-	-	GTIOC2B_B	-	-	-	-	-	-	-	-	-	-	-	-	-	TS16	-
E12	-	-	E13	24	-	-	-	P711	-	-	-	-	-	-	-	-	CTS1_RTS1_B/SS1_B	-	-	-	ET0_TX_CLK	-	-	-	-	-	TS15	-
F10	-	-	E12	25	-	-	-	P710	-	-	-	-	-	-	-	-	SCK1_B	-	-	-	ET0_TX_ER	-	-	-	-	-	TS14	-
E13	-	-	F10	26	-	-	IRQ10	P709	-	-	-	-	-	-	-	-	TXD1_B/MOSI1_B/SDA1_B	-	-	-	ET0_ETXD2	-	-	-	-	-	TS13	-
D15	-	-	D13	27	16	CACREF_B	IRQ11	P708	-	-	-	-	-	-	-	-	RXD1_B/MISO1_B/SCL1_B	-	SSLA3_B	-	ET0_ETXD3	-	-	-	-	-	TS12	-
E14	E14	36	E11	28	17	-	-	P415	-	-	-	-	-	-	-	-	-	-	SSLA2_B	-	ET0_TX_EN	RMII0_TXD_EN	-	-	-	-	TS11	-
E11	D15	37	D12	29	18	-	-	P414	-	-	-	-	-	-	-	-	-	-	SSLA1_B	-	ET0_RX_ER	RMII0_TXD1	-	SD0WP	-	-	TS10	-
D12	E13	38	E10	30	19	-	-	P413	-	-	-	GTOUUP_B	-	-	-	CTS0_RTS0_B/SS0_B	-	-	SSLA0_B	-	ET0_ETXD1	RMII0_TXD0	-	SD0CLK	-	-	TS09	-
D13	D14	39	C13	31	20	-	-	P412	-	-	-	GTOULO_B	-	-	-	SCK0_B	-	-	RSPCKA_B	-	ET0_ETXD0	REF50CK0	-	SD0CMD	-	-	TS08	-
D14	C15	40	D11	32	21	-	IRQ4	P411	-	-	AGTOA1	GTOVUP_B	GTIOC9A_A	-	-	TXD0_B/MOSI0_B/SDA0_B	CTS3_RTS3_A/SS3_A	-	MOSIA_B	-	ET0_ERXD1	RMII0_RXD0	-	SD0DAT0	-	-	TS07	-
C15	C14	41	C12	33	22	-	IRQ5	P410	-	-	AGTOB1	GTOVLO_B	GTIOC9B_A	-	-	RXD0_B/MISO0_B/SCL0_B	SCK3_A	-	MISOA_B	-	ET0_ERXD0	RMII0_RXD1	-	SD0DAT1	-	-	TS06	-
C14	B15	42	B13	34	23	-	IRQ6	P409	-	-	-	GTOWUP_B	GTIOC10A_A	-	USB_EXICEN_A	-	TXD3_A/MOSI3_A/SDA3_A	-	-	-	ET0_RX_CLK	RMII0_RX_ER	USBHS_EXICEN	-	-	-	TS05	-
B15	D13	43	D10	35	24	-	IRQ7	P408	-	-	-	GTOWLO_B	GTIOC10B_A	-	USB_ID_A	-	RXD3_A/MISO3_A/SCL3_A	-	-	-	ET0_CRS	RMII0_CRS_DV	USBHS_ID	-	-	-	TS04	-
A15	A15	44	A13	36	25	-	-	P407	-	-	-	-	-	RTCOUT	USB_VBUS	CTS4_RTS4_A/SS4_A	-	SDA0_B	SSLB3_A	-	ET0_EXOUT	ET0_EXOUT	-	-	ADTRG0	-	TS03	-
B13	C13	45	B11	37	26	VSS_USB	-	-	-	-	-	-	-	-	-	-	-	-	-	-	-	-	-	-	-	-	-	-
B14	B14	46	A12	38	27		-	-	-	-	-	-	-	-	USB_DM	-	-	-	-	-	-	-	-	-	-	-	-	-
A14	A14	47	B12	39	28		-	-	-	-	-	-	-	-	USB_DP	-	-	-	-	-	-	-	-	-	-	-	-	-

Table 1.17 Pin list (4 of 10)

Pin number						Power, System, CLK, Debug, CAC	Interrupt	I/O port	Extbus		Timers				Communication interfaces										Analog		HMI	
BGA224	BGA176	LQFP176	LGA145	LQFP144	LQFP100				External bus	SDRAM	AGT	GPT	GPT	RTC	USBFS, CAN	SCI0,2,4,6,8 (30 MHz)	SCI1,3,5,7,9 (30 MHz)	IIC	SPI, QSPI	SSI	MII (25 MHz)	RMII (50 MHz)	USBHS	SDHI	ADC12	DAC12, ACMPHS	CTSU	GLCDC, PDC
A13	B13	48	A11	40	29	VCC_USB	-	-	-	-	-	-	-	-	-	-	-	-	-	-	-	-	-	-	-	-	-	-
C13	C12	49	C11	41	30	-	-	P207	A17	-	-	-	-	-	-	-	-	-	SSLB2_A	-	-	-	-	-	-	-	TS02	-
G9	D12	50	B10	42	31	-	IRQ0-DS	P206	WAIT	-	-	GTIU_A	-	-	USB_VBUSEN_A	RXD4_A/MISO4_A/SCL4_A	-	SDA1_A	SSLB1_A	SSIDATA1_A	ET0_LINKSTA	ET0_LINKSTA	-	SD0DAT2	-	-	TS01	-
C12	E12	51	A10	43	32	CLKOUT_A	IRQ1-DS	P205	A16	-	AGTO1	GTIV_A	GTIOC4A_B	-	USB_OVRCURA_A-DS	TXD4_A/MOSI4_A/SDA4_A	CTS9_RTS9_A/SS9_A	SCL1_A	SSLB0_A	SSIWS1_A	ET0_WOL	ET0_WOL	-	SD0DAT3	-	-	TSCAP_A	-
D11	A13	52	C10	44	-	CACREF_A	-	P204	A18	-	AGTIO1_A	GTIW_A	GTIOC4B_B	-	USB_OVRCURB_A-DS	SCK4_A	SCK9_A	SCL0_B	RSPCKB_A	SSISCK1_A	ET0_RX_DV	-	-	SD0DAT4	-	-	TS00	-
B12	D11	53	A9	45	-	-	IRQ2-DS	P203	A19	-	-	-	GTIOC5A_A	-	CTX0_A	CTS2_RTS2_A/SS2_A	TXD9_A/MOSI9_A/SDA9_A	-	MOSIB_A	-	ET0_COL	-	-	SD0DAT5	-	-	TSCAP_B	-
A12	B12	54	C9	46	-	-	IRQ3-DS	P202	WR1/BC1	-	-	-	GTIOC5B_A	-	CRX0_A	SCK2_A	RXD9_A/MISO9_A/SCL9_A	-	MISOB_A		ET0_ERXD2	-	-	SD0DAT6	-	-	-	LCD_TCON3_B
E10	A12	55	B9	47	-	-	-	P313	A20	-	-	-	-	-	-	-	-	-	-	-	ET0_ERXD3	-	-	SD0DAT7	-	-	-	LCD_TCON2_B
F9	C11	56	-	-	-	-	-	P314	A21	-	-	-	-	-	-	-	-	-	-	-	-	-	-	-	-	-	-	LCD_TCON1_B
C11	B11	57	-	-	-	-	-	P315	A22	-	-	-	-	-	-	-	-	-	-	-	-	-	-	-	-	-	-	LCD_TCON0_B
E9	A11	58	-	-	-	-	-	P900	A23	-	-	-	-	-	-	-	-	-	-	-	-	-	-	-	-	-	-	LCD_CLK_B
B11	C10	59	-	-	-	-	-	P901		-	-	-	-	-	-	-	-	-	-	-	-	-	-	-	-	-	-	LCD_DATA15_B
A11	-	-	-	-	-	-	-	P902	-	-	-	-	-	-	-	-	-	-	-	-	-	-	-	-	-	-	-	LCD_DATA23_B
C10	D10	60	D9	48	-	VSS	-	-	-	-	-	-	-	-	-	-	-	-	-	-	-	-	-	-	-	-	-	-
D10	D9	61	D8	49	-	VCC	-	-	-	-	-	-	-	-	-	-	-	-	-	-	-	-	-	-	-	-	-	-
D9	-	-	-	-	-	-	-	P903	-	-	-	-	GTIOC7A_B	-	-	-	-	-	-	-	-	-	-	SD0CD	-	-	-	-
C9	-	-	-	-	-	-	-	P904	-	-	-	-	GTIOC7B_B	-	-	-	-	-	-	-	-	-	-	-	-	-	-	-
A10	A10	62	A8	50	33	VCL1	-	-	-	-	-	-	-	-	-	-	-	-	-	-	-	-	-	-	-	-	-	-
B10	B10	63	B8	51	34	VSS	-	-	-	-	-	-	-	-	-	-	-	-	-	-	-	-	-	-	-	-	-	-
A9	A9	64	A7	52	35	VLO	-	-	-	-	-	-	-	-	-	-	-	-	-	-	-	-	-	-	-	-	-	-
B9	B9	65	B7	53	36	VLO	-	-	-	-	-	-	-	-	-	-	-	-	-	-	-	-	-	-	-	-	-	-
A8	A8	66	A6	54	37	VCC_DCDC	-	-	-	-	-	-	-	-	-	-	-	-	-	-	-	-	-	-	-	-	-	-
H8	-	-	-	-	-		-	P913	-	-	-	-	-	-	-	-	-	-	-	-	-	-	-	-	-	-	-	-
F8	C9	67	C7	55	38	RES	-		-	-	-	-	-	-	-	-	-	-	-	-	-	-	-	-	-	-	-	-
C8	B8	68	B6	56	39	MD	-	P201	-	-	-	-	-	-	-	-	-	-	-	-	-	-	-	-	-	-	-	-
B8	C8	69	C8	57	40	-	NMI	P200	-	-	-	-	-	-	-	-	-	-	-	-	-	-	-	-	-	-	-	-

Table 1.17 Pin list (5 of 10)

Pin number						Power, System, CLK, Debug, CAC	Interrupt	I/O port	Extbus		Timers				Communication interfaces										Analog		HMI	
BGA224	BGA176	LQFP176	LGA145	LQFP144	LQFP100				External bus	SDRAM	AGT	GPT	GPT	RTC	USBFS, CAN	SCI0,2,4,6,8 (30 MHz)	SCI1,3,5,7,9 (30 MHz)	IIC	SPI, QSPI	SSI	MII (25 MHz)	RMII (50 MHz)	USBHS	SDHI	ADC12	DAC12, ACMPHS	CTSU	GLCDC, PDC
B7	-	-	-	-	-	-	-	P912	-	-	-	-	GTIOC8A_B	-	-	-	-	-	-	-	-	-	-	-	-	-	-	-
A7	-	-	-	-	-	-	-	P911	-	-	-	-	GTIOC8B_B	-	-	-	-	-	-	-	-	-	-	-	-	-	-	-
D8	-	-	-	-	-	-	-	P910	-	-	-	-	-	-	-	-	-	-	-	-	-	-	-	-	-	-	-	LCD_DATA22_B
E8	-	-	-	-	-	-	-	P909	-	-	-	-	-	-	-	-	-	-	-	-	-	-	-	-	-	-	-	LCD_DATA21_B
E7	D8	70	-	-	-	-	-	P908	CS7	-	-	-	-	-	-	-	-	-	-	-	-	-	-	-	-	-	-	LCD_DATA14_B
F7	D7	71	-	-	-	-	-	P907	CS6	-	-	-	-	-	-	-	-	-	-	-	-	-	-	-	-	-	-	LCD_DATA13_B
F6	A7	72	-	-	-	-	-	P906	CS5	-	-	-	-	-	-	-	-	-	-	-	-	-	-	-	-	-	-	LCD_DATA12_B
A6	B7	73	-	-	-	-	-	P905	CS4	-	-	-	-	-	-	-	-	-	-	-	-	-	-	-	-	-	-	LCD_DATA11_B
B6	C7	74	C6	58	-	-	-	P312	CS3	CAS	-	-	-	-	-	-	-	-	-	-	-	-	-	-	-	-	-	-
C7	D6	75	B5	59	-	-	-	P311	CS2	RAS	-	-	-	-	-	-	-	-	-	-	-	-	-	-	-	-	-	LCD_DATA23_A
A4	-	-	-	-	-	VSS	-	-	-	-	-	-	-	-	-	-	-	-	-	-	-	-	-	-	-	-	-	-
B4	-	-	-	-	-	VCC	-	-	-	-	-	-	-	-	-	-	-	-	-	-	-	-	-	-	-	-	-	-
C6	A6	76	D7	60	-	-	-	P310	A15	A15	-	-	-	-	-	-	-	-	-	-	-	-	-	-	-	-	-	LCD_DATA22_A
C5	B6	77	A5	61	-	-	-	P309	A14	A14	-	-	-	-	-	-	-	-	-	-	-	-	-	-	-	-	-	LCD_DATA21_A
D7	A5	78	C5	62	-	-	-	P308	A13	A13	-	-	-	-	-	-	-	-	-	-	-	-	-	-	-	-	-	LCD_DATA20_A
D6	C6	79	A4	63	41	-	-	P307	A12	A12	-	-	-	-	-	CTS6_RTS6_A/SS6_A	-	-	-	-	-	-	-	-	-	-	-	LCD_DATA19_A
D5	A4	80	B4	64	42	-	-	P306	A11	A11	-	-	-	-	-	SCK6_A	-	-	-	-	-	-	-	-	-	-	-	LCD_DATA18_A
D4	B5	81	D6	65	43	-	IRQ8	P305	A10	A10	-	-	-	-	-	TXD6_A/MOSI6_A/SDA6_A	-	-	-	-	-	-	-	-	-	-	-	LCD_DATA17_A
C4	B4	82	C4	66	44	-	IRQ9	P304	A09	A09	-	-	GTIOC7A_A	-	-	RXD6_A/MISO6_A/SCL6_A	-	-	-	-	-	-	-	-	-	-	-	LCD_DATA16_A
A5	C5	83	A3	67	45	VSS	-	-	-	-	-	-	-	-	-	-	-	-	-	-	-	-	-	-	-	-	-	-
B5	D5	84	B3	68	46	VCC	-	-	-	-	-	-	-	-	-	-	-	-	-	-	-	-	-	-	-	-	-	-
E6	-	-	-	-	-	-	-	P915	-	-	-	-	-	-	-	-	-	-	-	-	-	-	-	-	-	-	-	LCD_DATA20_B
E5	-	-	-	-	-	-	-	P914	-	-	-	-	-	-	-	-	-	-	-	-	-	-	-	-	-	-	-	LCD_DATA19_B
A3	A3	85	D5	69	47	-	-	P303	A08	A08	-	-	GTIOC7B_A	-	-	-	-	-	-	-	-	-	-	-	-	-	-	LCD_DATA15_A

Table 1.17 Pin list (6 of 10)

Pin number						Power, System, CLK, Debug, CAC	Interrupt	I/O port	Extbus		Timers				Communication interfaces										Analog		HMI	
BGA224	BGA176	LQFP176	LGA145	LQFP144	LQFP100				External bus	SDRAM	AGT	GPT	GPT	RTC	USBFS, CAN	SCI0,2,4,6,8 (30 MHz)	SCI1,3,5,7,9 (30 MHz)	IIC	SPI, QSPI	SSI	MII (25 MHz)	RMII (50 MHz)	USBHS	SDHI	ADC12	DAC12, ACMPHS	CTSU	GLCDC, PDC
A2	B3	86	A2	70	48	-	IRQ5	P302	A07	A07	-	GTOUUP_A	GTIOC4A_A	-	-	TXD2_A/MOSI2_A/SDA2_A	-	-	SSLB3_B	-	-	-	-	-	-	-	-	LCD_DATA14_A
B3	A2	87	C3	71	49	-	IRQ6	P301	A06	A06	-	GTOULO_A	GTIOC4B_A	-	-	RXD2_A/MISO2_A/SCL2_A	-	-	SSLB2_B	-	-	-	-	-	-	-	-	LCD_DATA13_A
F5	C4	88	B2	72	50	TCK/SWCLK	-	P300	-	-	-	-	GTIOC0A_A	-	-	-	-	-	SSLB1_B	-	-	-	-	-	-	-	-	-
B2	C3	89	A1	73	51	TMS/SWDIO	-	P108	-	-	-	-	GTIOC0B_A	-	-	-	CTS9_RTS9_B/SS9_B	-	SSLB0_B	-	-	-	-	-	-	-	-	-
B1	A1	90	D4	74	52	CLKOUT_B/TDO/SWO	-	P109	-	-	-	GTOVUP_A	GTIOC1A_A	-	CTX1_A	-	TXD9_B/MISO9_B/SDA9_B	-	MOSIB_B	-	-	-	-	-	-	-	-	-
C2	D3	91	B1	75	53	TDI	IRQ3	P110	-	-	-	GTOVLO_A	GTIOC1B_A	-	CRX1_A	CTS2_RTS2_B/SS2_B	RXD9_B/MISO9_B/SCL9_B	-	MISOB_B	-	-	-	-	-	-	VCOUT	-	-
C1	D4	92	C2	76	54	-	IRQ4	P111	A05	A05	-	-	GTIOC3A_A	-	-	SCK2_B	SCK9_B	-	RSPCKB_B	-	-	-	-	-	-	-	-	LCD_DATA12_A
C3	B2	93	D3	77	55	-	-	P112	A04	A04	-	-	GTIOC3B_A	-	-	TXD2_B/MOSI2_B/SDA2_B	-	-	-	SSISCK0_B		-	-	-	-	-	-	LCD_DATA11_A
D3	B1	94	C1	78	56	-	-	P113	A03	A03	-	-	-	-	-	RXD2_B/MISO2_B/SCL2_B	-	-	-	SSIWS0_B		-	-	-	-	-	-	LCD_DATA10_A
E4	C2	95	E4	79	57	-	-	P114	A02	A02	-	-	-	-	-	-	-	-	-	SSIRXD0_B		-	-	-	-	-	-	LCD_DATA09_A
E3	C1	96	E3	80	58	-	-	P115	A01	A01	-	-	-	-	-	-	-	-	-	SSITXD0_B		-	-	-	-	-	-	LCD_DATA08_A
D1	E3	97	D2	81	-	VCC	-		-	-	-	-	-	-	-	-	-	-	-	-	-	-	-	-	-	-	-	-
D2	E4	98	D1	82	-	VSS	-		-	-	-	-	-	-	-	-	-	-	-	-	-	-	-	-	-	-	-	-
F4	D2	99	F4	83	59	-	-	P608	A00/BC0	A00/DQM1	-	-	-	-	-	-	-	-	-	-	-	-	-	-	-	-	-	LCD_DATA07_A
G4	D1	100	E2	84	60	-	-	P609	CS1	CKE	-	-	-	-	-	-	-	-	-	-	-	-	-	-	-	-	-	LCD_DATA06_A
E1	F3	101	F3	85	61	-	-	P610	CS0	WE	-	-	-	-	-	-	-	-	-	-	-	-	-	-	-	-	-	LCD_DATA05_A
E2	E2	102	E1	86	-	-	-	P611		SDCS	-	-	-	-	-	-	-	-	-	-	-	-	-	-	-	-	-	-
F2	E1	103	F2	87	-	-	-	P612	D08	DQ08	-	-	-	-	-	-	-	-	-	-	-	-	-	-	-	-	-	-
F3	F4	104	F1	88	-	-	-	P613	D09	DQ09	-	-	-	-	-	-	-	-	-	-	-	-	-	-	-	-	-	-
F1	F2	105	G3	89	-	-	-	P614	D10	DQ10	-	-	-	-	-	-	-	-	-	-	-	-	-	-	-	-	-	-
G8	F1	106	-	-	-	-	-	P615	-	-	-	-	-	-	-	-	-	-	-	-	-	-	-	-	-	-	-	LCD_DATA10_B

Table 1.17 Pin list (7 of 10)

Pin number						Power, System, CLK, Debug, CAC	Interrupt	I/O port	Extbus		Timers				Communication interfaces										Analog		HMI	
BGA224	BGA176	LQFP176	LGA145	LQFP144	LQFP100				External bus	SDRAM	AGT	GPT	GPT	RTC	USBFS, CAN	SCI0,2,4,6,8 (30 MHz)	SCI1,3,5,7,9 (30 MHz)	IIC	SPI, QSPI	SSI	MII (25 MHz)	RMII (50 MHz)	USBHS	SDHI	ADC12	DAC12, ACMPHS	CTSU	GLCDC, PDC
G7	G1	107	-	-	-	-	-	PA08	-	-	-	-	-	-	-	-	-	-	-	-	-	-	-	-	-	-	-	LCD_DATA09_B
G6	-	-	-	-	-	-	-	PA11	-	-	-	-	-	-	-	-	-	-	-	-	-	-	-	-	-	-	-	LCD_DATA18_B
G5	-	-	-	-	-	TCLK	-	PA12	-	-	-	-	-	-	-	-	-	-	-	-	-	-	-	-	-	-	-	
H4	G4	108	-	-	-	-	-	PA09	-	-	-	-	-	-	-	-	-	-	-	-	-	-	-	-	-	-	-	LCD_DATA08_B
H7	-	-	-	-	-	TDATA0	-	PA13	-	-	-	-	-	-	-	-	-	-	-	-	-	-	-	-	-	-	-	-
G3	-	-	-	-	-	TDATA1	-	PA14	-	-	-	-	-	-	-	-	-	-	-	-	-	-	-	-	-	-	-	-
H5	G2	109	-	-	-	-	-	PA10	-	-	-	-	-	-	-	-	-	-	-	-	-	-	-	-	-	-	-	LCD_DATA07_B
G2	-	-	-	-	-	TDATA2	-	PA15	-	-	-	-	GTIOC9A_B	-	-	-	-	-	-	-	-	-	-	-	-	-	-	-
G1	-	-	-	-	-	TDATA3	-	P813	-	-	-	-	GTIOC9B_B	-	-	-	-	-	-	-	-	-	-	-	-	-	-	-
H3	G3	110	G1	90	62	VCC	-	-	-	-	-	-	-	-	-	-	-	-	-	-	-	-	-	-	-	-	-	-
H2	H3	111	G2	91	63	VSS	-	-	-	-	-	-	-	-	-	-	-	-	-	-	-	-	-	-	-	-	-	-
H1	H1	112	H1	92	64	VCL_F	-	-	-	-	-	-	-	-	-	-	-	-	-	-	-	-	-	-	-	-	-	-
J1	-	-	-	-	-		-	PA07	-	-	-	-	GTIOC10A_B	-	-	-	-	-	-	-	-	-	-	-	-	-	-	-
J2	-	-	-	-	-		-	PA06	-	-	-	-	GTIOC10B_B	-	-	-	-	-	-	-	-	-	-	-	-	-	-	-
J3	-	-	-	-	-		-	PA05	-	-	-	-	GTIOC11A_B	-	-	-	CTS7_RTS7_B/SS7_B	-	-	-	-	-	-	-	-	-	-	-
J4	-	-	-	-	-		-	PA04	-	-	-	-	GTIOC11B_B	-	-	-	SCK7_B	-	-	-	-	-	-	-	-	-	-	-
J5	-	-	-	-	-		IRQ9	PA03	-	-	-	-	-	-	-	-	RXD7_B/MISO7_B/SCL7_B	-	-	-	-	-	-	-	-	-	-	-
H6	-	-	-	-	-		IRQ10	PA02	-	-	-	-	-	-	-	-	TXD7_B/MOSI7_B/SDA7_B	-	-	-	-	-	-	-	-	-	-	-
J6	H2	113	-	-	-		-	PA01	-	-	-	-	-	-	-	-	-	-	-	-	-	-	-	-	-	-	-	LCD_DATA06_B
J7	H4	114	-	-	-		-	PA00	-	-	-	-	-	-	-	-	-	-	-	-	-	-	-	-	-	-	-	LCD_DATA05_B
K5	J4	115	-	-	-		-	P607	-	-	-	-	-	-	-	-	-	-	-	-	-	-	-	-	-	-	-	LCD_DATA04_B
K6	J1	116	-	-	-		-	P606	-	-	-	-	-	-	-	-	-	-	-	-	-	-	-	-	-	-	-	LCD_DATA03_B
K1	J2	117	H2	93	-		-	P605	D11	DQ11	-	-	-	-	-	-	-	-	-	-	-	-	-	-	-	-	-	-
K2	J3	118	G4	94	-		-	P604	D12	DQ12	-	-	-	-	-	-	-	-	-	-	-	-	-	-	-	-	-	-
K3	K3	119	H3	95	-		-	P603	D13	DQ13	-	-	-	-	-	-	-	-	-	-	-	-	-	-	-	-	-	-

Table 1.17 Pin list (8 of 10)

Pin number						Power, System, CLK, Debug, CAC	Interrupt	I/O port	Extbus		Timers				Communication interfaces										Analog		HMI	
BGA224	BGA176	LQFP176	LGA145	LQFP144	LQFP100				External bus	SDRAM	AGT	GPT	GPT	RTC	USBFS, CAN	SCI0,2,4,6,8 (30 MHz)	SCI1,3,5,7,9 (30 MHz)	IIC	SPI, QSPI	SSI	MII (25 MHz)	RMII (50 MHz)	USBHS	SDHI	ADC12	DAC12, ACMPHS	CTSU	GLCDC, PDC
L1	K1	120	J1	96	65		-	P602	EBCLK	SDCLK	-	-	-	-	-	-	-	-	-	-	-	-	-	-	-	-	-	LCD_DATA04_A
L2	K2	121	J2	97	66	-	-	P601	WR/WR0	DQM0	-	-	-	-	-	-	-	-	-	-	-	-	-	-	-	-	-	LCD_DATA03_A
L3	L1	122	H4	98	67	-	-	P600	RD	-	-	-	-	-	-	-	-	-	-	-	-	-	-	-	-	-	-	LCD_DATA02_A
M2	K4	123	K2	99	-	VCC	-	-	-	-	-	-	-	-	-	-	-	-	-	-	-	-	-	-	-	-	-	-
M1	L4	124	K1	100	-	VSS	-	-	-	-	-	-	-	-	-	-	-	-	-	-	-	-	-	-	-	-	-	-
K4	L2	125	J3	101	68	-	KR07	P107	D07	DQ07	-	-	GTIOC8A_A	-	-	CTS8_RTS8_A/SS8_A	-	-	-	-	-	-	-	-	-	-	-	LCD_DATA01_A
L4	M1	126	K3	102	69	-	KR06	P106	D06	DQ06	-	-	GTIOC8B_A	-	-	SCK8_A	-	-	SSLA3_A	-	-	-	-	-	-	-	-	LCD_DATA00_A
M3	L3	127	J4	103	70	-	IRQ0/KR05	P105	D05	DQ05	-	GTETRGA_C	-	-	-	TXD8_A/MOSI8_A/SDA8_A	-	-	SSLA2_A	-	-	-	-	-	-	-	-	LCD_TCON3_A
N3	M2	128	L3	104	71	-	IRQ1/KR04	P104	D04	DQ04	-	GTETRGB_B	-	-	-	RXD8_A/MISO8_A/SCL8_A	-	-	SSLA1_A	-	-	-	-	-	-	-	-	LCD_TCON2_A
N2	N1	129	L1	105	72	-	KR03	P103	D03	DQ03	-	GTOWUP_A	GTIOC2A_A	-	-	CTS0_RTS0_A/SS0_A	-	-	SSLA0_A	-	-	-	-	-	-	-	-	LCD_TCON1_A
N1	M3	130	M1	106	73	-	KR02	P102	D02	DQ02	AGTO0	GTOWLO_A	GTIOC2B_A	-	-	SCK0_A	-	-	RSPCKA_A	-	-	-	-	-	ADTRG0_A	-	-	LCD_TCON0_A
P1	N2	131	M2	107	74	-	IRQ1/KR01	P101	D01	DQ01	AGTEE0	GTETRGB_A	-	-	-	TXD0_A/MOSI_A/SDA0_A	CTS1_RTS1_A/SS1_A	SDA1_B	MOSIA_A	-	-	-	-	-	-	-	-	LCD_CLK_A
R1	P1	132	N1	108	75	-	IRQ2/KR00	P100	D00	DQ00	AGTIO0_A	GTETRGA_A	-	-	-	RXD0_A/MISO0_A/SCL0_A	SCK1_A	SCL1_B	MISOA_A	-	-	-	-	-	-	-	-	LCD_EXTCLK_A
P2	N3	133	L2	109	-	-	-	P800	D14	DQ14	-	-	-	-	-	-	-	-	-	-	-	-	-	-	-	-	-	-
R2	R1	134	N2	110	-	-	-	P801	D15	DQ15	-	-	-	-	-	-	-	-	-	-	-	-	-	SD1DAT4	-	-	-	-
K7	-	-	-	-	-	-	-	P808	-	-	-	-	-	-	-	-	-	-	-	-	-	-	-	-	-	-	-	-
K8	-	-	-	-	-	-	-	P809	-	-	-	-	-	-	-	-	-	-	-	-	-	-	-	-	-	-	-	-
P3	-	-	-	-	-	-	-	P810	-	-	-	-	-	-	-	-	-	-	-	-	-	-	-	-	-	-	-	-
R3	P2	135	-	-	-	-	-	P802	-	-	-	-	-	-	-	-	-	-	-	-	-	-	-	SD1DAT5	-	-	-	LCD_DATA02_B
P4	R2	136	-	-	-	-	-	P803	-	-	-	-	-	-	-	-	-	-	-	-	-	-	-	SD1DAT6	-	-	-	LCD_DATA01_B
M4	P3	137	-	-	-		-	P804	-	-	-	-	-	-	-	-	-	-	-	-	-	-	-	SD1DAT7	-	-	-	LCD_DATA00_B
L5	-	-	-	-	-		-	P811	-	-	-	-	-	-	CTX0_C	-	-	-	-	-	-	-	-	-	-	-	-	-
L6	-	-	-	-	-		-	P812	-	-	-	-	-	-	CRX0_C	-	-	-	-	-	-	-	-	-	-	-	-	-
L7	N4	138	N3	111	-	VCC	-		-	-	-	-	-	-		-	-	-	-	-	-	-	-	-	-	-	-	-
L8	M4	139	M3	112	-	VSS	-		-	-	-	-	-	-		-	-	-	-	-	-	-	-	-	-	-	-	-

Table 1.17 Pin list (9 of 10)

Pin number						Power, System, CLK, Debug, CAC	Interrupt	I/O port	Extbus		Timers				Communication interfaces										Analog		HMI	
BGA224	BGA176	LQFP176	LGA145	LQFP144	LQFP100				External bus	SDRAM	AGT	GPT	GPT	RTC	USBFS, CAN	SCI0,2,4,6,8 (30 MHz)	SCI1,3,5,7,9 (30 MHz)	IIC	SPI, QSPI	SSI	MII (25 MHz)	RMII (50 MHz)	USBHS	SDHI	ADC12	DAC12, ACMPHS	CTSU	GLCDC, PDC
R4	R3	140	K4	113	76	-	-	P500	-	-	AGTOA0	GTIU_B	GTIOC11A_A	-	USB_VBUSEN_B	-	-	-	QSPCLK	-	-	-	-	SD1CLK	AN016	IVREF0	-	-
N4	P4	141	M4	114	77	-	IRQ11	P501	-	-	AGTOB0	GTIV_B	GTIOC11B_A	-	USB_OVRCURA_B	-	TXD5_A/MOSI5_A/SDA5_A	-	QSSL	-	-	-	-	SD1CMD	AN116	IVREF1	-	-
N5	R4	142	L4	115	78	-	IRQ12	P502	-	-	-	GTIW_B	GTIOC12A	-	USB_OVRCURB_B	-	RXD5_A/MISO5_A/SCL5_A	-	QIO0	-	-	-	-	SD1DAT0	AN017	IVCMP0	-	-
P5	N5	143	K5	116	79	-		P503	-	-	-	GTETRGC_B	GTIOC12B	-	USB_EXICEN_B	CTS6_RTS6_B/SS6_B	SCK5_A	-	QIO1	-	-	-	-	SD1DAT1	AN117	-	-	-
R5	P5	144	L5	117	80	-		P504	-	-	-	GTETRGD_B	GTIOC13A	-	USB_ID_B	SCK6_B	CTS5_RTS5_A/SS5_A		QIO2	-	-	-	-	SD1DAT2	AN018	-	-	-
M5	P6	145	K6	118	-	-	IRQ14	P505	-	-	-	-	GTIOC13B	-	-	RXD6_B/MISO6_B/SCL6_B	-	-	QIO3	-	-	-	-	SD1DAT3	AN118	-	-	-
M6	R5	146	L6	119	-	-	IRQ15	P506	-	-	-	-	-	-	-	TXD6_B/MOSI6_B/SDA6_B	-	-	-	-	-	-	-	SD1CD	AN019	-	-	-
N6	N6	147	-	-	-	-	-	P507	-	-	-	-	-	-	-		CTS5_RTS5_B/SS5_B	-	-	-	-	-	-	SD1WP	AN119	-	-	-
M7	-	-	-	-	-	-	-	P508	-	-	-	-	-	-	-		SCK5_B	-	-	-	-	-	-	-	AN020	-	-	-
P6	-	-	-	-	-	-	-	P509	-	-	-	-	-	-	-		TXD5_B/MOSI5_B/SDA5_B	-	-	-	-	-	-	-	AN120	-	-	-
N7	-	-	-	-	-	-	-	P510	-	-	-	-	-	-	-	-	RXD5_B/MISO5_B/SCL5_B	-	-	-	-	-	-	-	AN021	-	-	-
R6	R6	148	N4	120	81	VCL2	-	-	-	-	-	-	-	-	-	-	-	-	-	-	-	-	-	-	-	-	-	-
P7	M7	149	N5	121	82	VCC	-	-	-	-	-	-	-	-	-	-	-	-	-	-	-	-	-	-	-	-	-	-
R7	N7	150	M5	122	83	VSS	-	-	-	-	-	-	-	-	-	-	-	-	-	-	-	-	-	-	-	-	-	-
M8	P7	151	M6	123	84	-	IRQ13	P015	-	-	-	-	-	-	-	-	-	-	-	-	-	-	-	-	AN006/AN106	DA1/IVCMP1	-	-
M9	R7	152	N6	124	85	-	-	P014	-	-	-	-	-	-	-	-	-	-	-	-	-	-	-	-	AN005/AN105	DA0/IVREF3	-	-
N8	P8	153	M7	125	86	VREFL	-	-	-	-	-	-	-	-	-	-	-	-	-	-	-	-	-	-	-	-	-	-
R8	R8	154	N7	126	87	VREFH	-	-	-	-	-	-	-	-	-	-	-	-	-	-	-	-	-	-	-	-	-	-
P8	N8	155	L7	127	88	AVCC0	-	-	-	-	-	-	-	-	-	-	-	-	-	-	-	-	-	-	-	-	-	-
N9	N9	156	L8	128	89	AVSS0	-	-	-	-	-	-	-	-	-	-	-	-	-	-	-	-	-	-	-	-	-	-
P9	P9	157	M8	129	90	VREFL0	-	-	-	-	-	-	-	-	-	-	-	-	-	-	-	-	-	-	-	-	-	-
R9	R9	158	N8	130	91	VREFH0	-	-	-	-	-	-	-	-	-	-	-	-	-	-	-	-	-	-	-	-	-	-

Table 1.17 Pin list (10 of 10)

Pin number						Power, System, CLK, Debug, CAC	Interrupt	I/O port	Extbus		Timers				Communication interfaces										Analog		HMI	
BGA224	BGA176	LQFP176	LGA145	LQFP144	LQFP100				External bus	SDRAM	AGT	GPT	GPT	RTC	USBFS, CAN	SCI0,2,4,6,8 (30 MHz)	SCI1,3,5,7,9 (30 MHz)	IIC	SPI, QSPI	SSI	MII (25 MHz)	RMII (50 MHz)	USBHS	SDHI	ADC12	DAC12, ACMPHS	CTSU	GLCDC, PDC
N10	-	-	-	-	-	-	IRQ15-DS	P011	-	-	-	-	-	-	-	-	-	-	-	-	-	-	-	-	AN104	-	-	-
M10	M8	159	-	-	-	-	IRQ14-DS	P010	-	-	-	-	-	-	-	-	-	-	-	-	-	-	-	-	AN103	-	-	-
R10	M9	160	M9	131	-	-	IRQ13-DS	P009	-	-	-	-	-	-	-	-	-	-	-	-	-	-	-	-	AN004	-	-	-
N11	P10	161	N9	132	92	-	IRQ12-DS	P008	-	-	-	-	-	-	-	-	-	-	-	-	-	-	-	-	AN003	-	-	-
L9	M6	162	K7	133	93	-	-	P007	-	-	-	-	-	-	-	-	-	-	-	-	-	-	-	-	PGAVSS100	-	-	-
P10	N10	163	L9	134	94	-	IRQ11-DS	P006	-	-	-	-	-	-	-	-	-	-	-	-	-	-	-	-	AN102	IVCMP2	-	-
R11	R10	164	K8	135	95	-	IRQ10-DS	P005	-	-	-	-	-	-	-	-	-	-	-	-	-	-	-	-	AN101	IVCMP2	-	-
M11	P11	165	K9	136	96	-	IRQ9-DS	P004	-	-	-	-	-	-	-	-	-	-	-	-	-	-	-	-	AN100	IVCMP2	-	-
L10	M5	166	K10	137	97	-	-	P003	-	-	-	-	-	-	-	-	-	-	-	-	-	-	-	-	PGAVSS000	-	-	-
N12	R11	167	M10	138	98	-	IRQ8-DS	P002	-	-	-	-	-	-	-	-	-	-	-	-	-	-	-	-	AN002	IVCMP2	-	-
P11	N11	168	N10	139	99	-	IRQ7-DS	P001	-	-	-	-	-	-	-	-	-	-	-	-	-	-	-	-	AN001	IVCMP2	-	-
R12	R12	169	L10	140	100	-	IRQ6-DS	P000	-	-	-	-	-	-	-	-	-	-	-	-	-	-	-	-	AN000	IVCMP2	-	-
L11	M10	170	N11	141	-	VSS	-	-	-	-	-	-	-	-	-	-	-	-	-	-	-	-	-	-	-	-	-	-
L12	M11	171	N12	142	-	VCC	-	-	-	-	-	-	-	-	-	-	-	-	-	-	-	-	-	-	-	-	-	-
M12	P12	172	-	-	-	-	-	P806	-	-	-	-	-	-	-	-	-	-	-	-	-	-	-	-	-	-	-	LCD_EXTCLK_B
R13	R13	173	-	-	-	-	-	P805	-	-	-	-	-	-	-	-	-	-	-	-	-	-	-	-	-	-	-	LCD_DATA17_B
P12	-	-	-	-	-	-	-	P807	-	-	-	-	-	-	-	-	-	-	-	-	-	-	-	-	-	-	-	-
P13	N12	174	-	-	-	-	-	P513	-	-	-	-	-	-	-	-	-	-	-	-	ET1_ETXD3	-	-	-	-	-	-	LCD_DATA16_B
K9	-	-	-	-	-	-	-	P515	-	-	-	-	-	-	-	-	-	-	-	-	-	-	-	-	-	-	-	-
R14	R14	175	M11	143	-	-	IRQ14	P512	-	-	-	-	GTIOC0A_B	-	CTX1_B	TXD4_B/MOSI4_B/SDA4_B	-	SCL2	-	-	ET1_ETXD2	-	-	-	-	-	-	VSYNC
P14	-	-	-	-	-	-		P514	-	-	-	GTETRGB_C	-	-	-	-	-	-	-	-	-	-	-	-	-	-	-	-
R15	P13	176	M12	144	-	-	IRQ15	P511	-	-	-	-	GTIOC0B_B	-	CRX1_B	RXD4_B/MISO4_B/SCL4_B	-	SDA2	-	-	ET1_TX_ER	-	-	-	-	-	-	PCKO

Note: Some pin names have the added suffix of _A, _B, and _C. When assigning the IIC, SPI, and SSI functionality, select the functional pins with the same suffix. The other pins can be selected regardless of the suffix.

2. Electrical Characteristics

Unless otherwise specified, the electrical characteristics of the MCU are defined under the following conditions:

VCC = AVCC0 = VCC_USB = VBATT = 2.7 to 3.6 V, 2.7 ≤ VREFH0/VREFH ≤ AVCC0, VCC_USBHS = AVCC_USBHS = 3.0 to 3.6 V, VSS = AVSS0 = VREFL0/VREFL = VSS_USB = VSS1_USBHS = VSS2_USBHS = PVSS_USBHS = AVSS_USBHS = 0 V, Ta = Topr

Figure 2.1 shows the timing conditions.

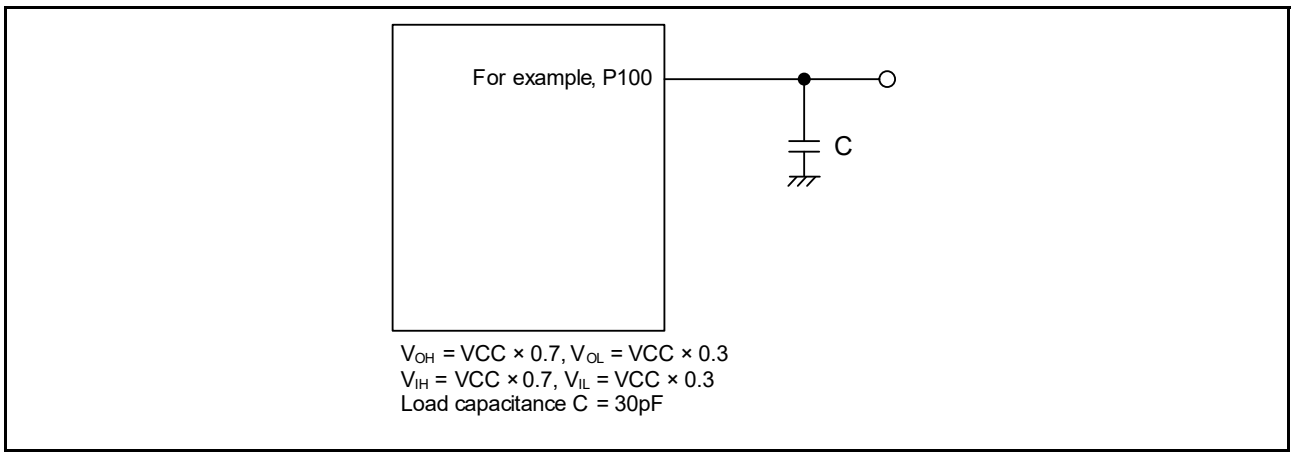

Figure 2.1 Input or output timing measurement conditions

The measurement conditions of timing specification for each peripheral are recommended for the best peripheral operation. However, make sure to adjust driving abilities for each pin to meet your conditions.

2.1 Absolute Maximum Ratings

Table 2.1 Absolute maximum ratings

Item	Symbol	Value	Unit
Power supply voltage	VCC, VCC_USB *2	-0.3 to +4.6	V
VBATT power supply voltage	VBATT	-0.3 to +4.6	V
Input voltage (except for 5V-tolerant ports*1)	V_{in}	-0.3 to VCC + 0.3	V
Input voltage (5V-tolerant ports*1)	V_{in}	-0.3 to VCC + 4.6 (max 5.8)	V
Reference power supply voltage	VREFH/VREFH0	-0.3 to AVCC0 + 0.3	V
Analog power supply voltage	AVCC0 *2	-0.3 to +4.6	V
USBHS power supply voltage	VCC_USBHS	-0.3 to +4.6	V
USBHS analog power supply voltage	AVCC_USBHS	-0.3 to +4.6	V
Switching regulator power supply voltage	VCC_DCDC	-0.3 to +4.6	V
Analog input voltage (except for P000 to P007)	V_{AN}	-0.3 to AVCC0 + 0.3	V
Analog input voltage (P000 to P007) when PGA differential input is disabled	V_{AN}	-0.3 to AVCC0 + 0.3	V
Analog input voltage (P000 to P002, P004 to P006) when PGA differential input is enabled	V_{AN}	-1.1 to AVCC0 + 0.3	V
Analog input voltage (P003, P007) when PGA differential input is enabled	V_{AN}	-0.6 to AVCC0 + 0.3	V
Operating temperature*3,*4	T_{opr}	-40 to +85 -40 to +105	°C
Storage temperature	T_{stg}	-55 to +125	°C

Note: See the Total Operating Time (TOT) Utility Calculator located under http://www.renesas.com. This utility calculator is provided for educational and evaluation purposes only and is subject to the accompanying disclaimer.

Note 1. Ports P205, P206, P400, P401, P407 to P415, P511, P512, P708 to P713, and PB01 are 5V-tolerant.
Note 2. Connect AVCC0 and VCC_USB to VCC.
Note 3. See section 2.2.1, Tj/Ta Definition.
Note 4. The upper limit of operating temperature is 85°C or 105°C, depending on the product. For details, see section 1.3, Part Numbering.

Caution: Permanent damage to the MCU might result if absolute maximum ratings are exceeded.

Table 2.2 Recommended operating conditions

Item	Symbol	Value	Min	Typ	Max	Unit
Power supply voltages	VCC	When USB/SDRAM is not used	2.7	-	3.6	V
		When USB/SDRAM is used	3.0	-	3.6	V
	VSS		-	0	-	V
USB power supply voltages	VCC_USB, VCC_USBHS		-	VCC	-	V
	VSS_USB, AVSS_USBHS, PVSS_USBHS, VSS1_USBHS, VSS2_USBHS		-	0	-	V
Switching regulator power supply voltage	VCC_DCDC	When switching regulator is used	-	VCC	-	V
		When switching regulator is not used	-	0	-	V
VBATT power supply voltage	VBATT		2.0		3.6	V
Analog power supply voltages	AVCC0		-	VCC	-	V
	AVSS0		-	0	-	V

2.2 DC Characteristics

2.2.1 Tj/Ta Definition

Table 2.3 DC characteristics
Conditions: Products with operating temperature (T_a) –40 to +105°C

Item	Symbol	Typ	Max	Unit	Test conditions
Permissible junction temperature	Tj	-	125	°C	High-speed mode Low-speed mode Subosc-speed mode
			105*1		

Note: Make sure that Tj = T_a + θja × total power consumption (W), where total power consumption = (VCC – V_{OH}) × ΣI_{OH} + V_{OL} × ΣI_{OL} + I_{CC}max × VCC.

Note 1. The upper limit of operating temperature is 85°C or 105°C depending on the product. For details, see section 1.3, Part Numbering. If the part number shows the operation temperature as 85°C, then the maximum value of Tj is 105°C, otherwise it is 125°C.

2.2.2 I/O V_{IH}, V_{IL}

Table 2.4 I/O V_{IH}, V_{IL}

Item					Symbol	Min	Typ	Max	Unit
Input voltage (except for Schmitt trigger input pins)	Peripheral function pin	EXTAL (external clock input), WAIT, SPI			V_{IH}	VCC × 0.8	-	-	V
					V_{IL}	-	-	VCC × 0.2	
		D00 to D15, DQ00 to DQ15			V_{IH}	VCC × 0.7	-	-	
					V_{IL}	-	-	VCC × 0.3	
		ETHERC			V_{IH}	2.3	-	-	
					V_{IL}	-	-	VCC × 0.2	
		IIC (SMBus)*1			V_{IH}	2.1	-	-	
					V_{IL}	-	-	0.8	
		IIC (SMBus)*2			V_{IH}	2.1	-	-	
					V_{IL}	-	-	0.8	
Schmitt trigger input voltage	Peripheral function pin	IIC (except for SMBus)*1			V_{IH}	VCC × 0.7	-	-	V
					V_{IL}	-	-	VCC × 0.3	
					ΔV_T	VCC × 0.05	-	-	
		IIC (except for SMBus)*2			V_{IH}	VCC × 0.7	-	VCC + 3.6 (max 5.8)	
					V_{IL}	-	-	VCC × 0.3	
					ΔV_T	VCC × 0.05	-	-	
		5V-tolerant ports*3*7			V_{IH}	VCC × 0.8	-	VCC + 3.6 (max 5.8)	
					V_{IL}	-	-	VCC × 0.2	
					ΔV_T	VCC × 0.05	-	-	
		RTCIC0, RTCIC1, RTCIC2	When using the Battery Backup Function	When VBATT power supply is selected	V_{IH}	V_{BATT} × 0.8	-	V_{BATT} + 0.3	
					V_{IL}	-	-	V_{BATT} × 0.2	
					ΔV_T	V_{BATT} × 0.05	-	-	
				When VCC power supply is selected	V_{IH}	VCC x 0.8	-	Higher voltage, either VCC + 0.3 or VBATT + 0.3	
					V_{IL}	-	-	VCC × 0.2	
					ΔV_T	VCC × 0.05	-	-	
			When not using the Battery Backup Function		V_{IH}	VCC × 0.8	-	VCC + 0.3	
					V_{IL}	-	-	VCC × 0.2	
					ΔV_T	VCC × 0.05	-	-	
		Other input pins*4			V_{IH}	VCC × 0.8	-	-	
					V_{IL}	-	-	VCC × 0.2	
					ΔV_T	VCC × 0.05	-	-	
	Ports	5V-tolerant ports*5*7			V_{IH}	VCC × 0.8	-	VCC + 3.6 (max 5.8)	
					V_{IL}	-	-	VCC × 0.2	
		Other input pins*6			V_{IH}	VCC × 0.8	-	-	
					V_{IL}	-	-	VCC × 0.2	

Note 1. SCL0_B, SCL1_B, SDA1_B (total 3 pins).
Note 2. SCL0_A, SDA0_A, SDA0_B, SCL1_A, SDA1_A, SCL2, SDA2 (total 7 pins).
Note 3. RES and peripheral function pins associated with P205, P206, P400, P401, P407 to P415, P511, P512, P708 to P713, PB01 (total 23 pins).
Note 4. All input pins except for the peripheral function pins already described in the table.
Note 5. P205, P206, P400, P401, P407 to P415, P511, P512, P708 to P713, PB01 (total 22pins).

Note 6. All input pins except for the ports already described in the table.

Note 7. When VCC is less than 2.7 V, the input voltage of 5V-tolerant ports should be less than 3.6 V, otherwise breakdown may occur because 5V-tolerant ports are electrically controlled so as not to violate the break down voltage.

2.2.3 I/O I_{OH}, I_{OL}

Table 2.5 I/O I_{OH}, I_{OL} (1 of 2)

Item			Symbol	Min	Typ	Max	Unit
Permissible output current (average value per pin)	Ports P008 to P011, P201,P212	-	I_{OH}	-	--	-2.0	mA
			I_{OL}	-	-	2.0	mA
	Ports P014, P015, P213, P400, P401, P511, P512	-	I_{OH}	-	-	-4.0	mA
			I_{OL}	-	-	4.0	mA
	Ports P402 to P404	Low drive*1	I_{OH}	-	-	-2.0	mA
			I_{OL}	-	-	2.0	mA
		Middle drive*2	I_{OH}	-	-	-4.0	mA
			I_{OL}	-	-	4.0	mA
	Ports P205, P206, P407 to P415, P602, P708 to P713, P813, PA12 to PA15, PB01 (total 24 pins)	Low drive*1	I_{OH}	-	-	-2.0	mA
			I_{OL}	-	-	2.0	mA
		Middle drive*2	I_{OH}	-	-	-4.0	mA
			I_{OL}	-	-	4.0	mA
		High drive*3	I_{OH}	-	-	-20	mA
			I_{OL}	-	-	20	mA
	Other output pins*4	Low drive*1	I_{OH}	-	-	-2.0	mA
			I_{OL}	-	-	2.0	mA
		Middle drive*2	I_{OH}	-	-	-4.0	mA
			I_{OL}	-	-	4.0	mA
		High drive*3	I_{OH}	-	-	-16	mA
			I_{OL}	-	-	16	mA
Permissible output current (max value per pin)	Ports P008 to P011, P201,P212	-	I_{OH}	-	-	-4.0	mA
			I_{OL}	-	-	4.0	mA
	Ports P014, P015, P213, P400, P401, P511, P512	-	I_{OH}	-	-	-8.0	mA
			I_{OL}	-	-	8.0	mA
	Ports P402 to P404	Low drive*1	I_{OH}	-	-	-4.0	mA
			I_{OL}	-	-	4.0	mA
		Middle drive*2	I_{OH}	-	-	-8.0	mA
			I_{OL}	-	-	8.0	mA
	Ports P205, P206, P407 to P415, P602, P708 to P713, P813, PA12 to PA15, PB01 (total 24 pins)	Low drive*1	I_{OH}	-	-	-4.0	mA
			I_{OL}	-	-	4.0	mA
		Middle drive*2	I_{OH}	-	-	-8.0	mA
			I_{OL}	-	-	8.0	mA
		High drive*3	I_{OH}	-	-	-40	mA
			I_{OL}	-	-	40	mA
	Other output pins*4	Low drive*1	I_{OH}	-	-	-4.0	mA
			I_{OL}	-	-	4.0	mA
		Middle drive*2	I_{OH}	-	-	-8.0	mA
			I_{OL}	-	-	8.0	mA
		High drive*3	I_{OH}	-	-	-32	mA
			I_{OL}	-	-	32	mA

Table 2.5 I/O I_{OH}, I_{OL} (2 of 2)

Item		Symbol	Min	Typ	Max	Unit
Permissible output current (max value total pins)	Maximum of all output pins	$\Sigma I_{OH\ (max)}$	-	-	-80	mA
		$\Sigma I_{OL\ (max)}$	-	-	80	mA

Note 1. This is the value when low driving ability is selected in the port drive capability bit in the PmnPFS register. The selected driving ability is retained in Deep Software Standby mode.

Note 2. This is the value when middle driving ability is selected in the port drive capability bit in the PmnPFS register. The selected driving ability is retained in Deep Software Standby mode.

Note 3. This is the value when high driving ability is selected in the port drive capability bit in the PmnPFS register. When the following ports are configured for high driving ability, they shift to middle driving ability during Deep Software Standby mode: P203 to P207, P407 to P415, P602, P708 to P713, P813, PA12 to PA15, PB01.

Note 4. Except for P000 to P007, P200, which are input ports.

Caution: To protect the reliability of the MCU, the output current values should not exceed the values in the preceding table. The average output current indicates the average value of current measured during 100 µs.

2.2.4 I/O V_{OH}, V_{OL}, and Other Characteristics

Table 2.6 I/O V_{OH}, V_{OL}, and other characteristics

Item		Symbol	Min	Typ	Max	Unit	Test conditions
Output voltage	IIC	V_{OL}	-	-	0.4	V	I_{OL} = 3.0 mA
		V_{OL}	-	-	0.6		I_{OL} = 6.0 mA
	IIC*1	V_{OL}	-	-	0.4		I_{OL} = 15.0 mA (ICFER.FMPE = 1)
		V_{OL}	-	0.4	-		I_{OL} = 20.0 mA (ICFER.FMPE = 1)
	ETHERC	V_{OH}	VCC - 0.5	-	-		I_{OH} = –1.0 mA
		V_{OL}	-	-	0.4		I_{OL} = 1.0 mA
	Ports P205, P206, P407 to P415, P602, P708 to P713, P813, PA12 to PA15, PB01 (total 24 pins)*2	V_{OH}	VCC - 1.0	-	-		I_{OH} = –20 mA VCC = 3.3 V
		V_{OL}	-	-	1.0		I_{OL} = 20 mA VCC = 3.3 V
	Other output pins	V_{OH}	VCC - 0.5	-	-		I_{OH} = –1.0 mA
		V_{OL}	-	-	0.5		I_{OL} = 1.0 mA
Input leakage current	RES	$\lvert I_{in} \rvert$	-	-	5.0	µA	V_{in} = 0 V V_{in} = 5.5 V
	Ports P000 to P007, P200		-	-	1.0		V_{in} = 0 V V_{in} = VCC
Three-state leakage current (off state)	5V-tolerant ports	$\lvert I_{TSI} \rvert$	-	-	5.0	µA	V_{in} = 0 V V_{in} = 5.5 V
	Other ports (except for ports P000 to P007, P200)		-	-	1.0		V_{in} = 0 V V_{in} = VCC
Input pull-up MOS current	Ports P0 to PB (except for ports P000 to P007)	I_p	-300	-	-10	µA	VCC = 2.7 to 3.6 V V_{in} = 0 V
Input capacitance	USB_DP, USB_DM, and ports P003, P007, P014, P015,P400, P415, P401, P511, P512	C_{in}	-	-	16	pF	Vbias = 0V Vamp = 20mV f = 1 MHz T_a = 25°C
	Other input pins		-	-	8		

Note 1. SCL0_A, SDA0_A (total 2 pins).

Note 2. This is the value when high driving ability is selected in the Port Drive Capability bit in the PmnPFS register. Even when high driving ability is selected, I_{OH} and I_{OL} shift to middle driving ability during Deep Software Standby mode.

2.2.5 Operating and Standby Current

Table 2.7 Operating and standby current (1 of 2)

Item				Symbol	LDO mode Min	LDO mode Typ	LDO mode Max	DCDC mode Min	DCDC mode Typ	DCDC mode Max	Unit	Test conditions
Supply current*1	High-speed mode	Maximum*2		I_{CC}*7	-	-	330	-	-	140	mA	ICLK = 240 MHz PCLKA = 120 MHz*6 PCLKB = 60 MHz PCLKC = 60 MHz PCLKD = 120 MHz FCLK = 60 MHz BCLK = 120 MHz
		CoreMark®*4			-	45	-	-	24	-		
		Normal mode*3	All peripheral clocks enabled, while (1) code executing from flash		-	75	-	-	38	-		
			All peripheral clocks disabled, while (1) code executing from flash*5		-	32	-	-	18	-		
		Sleep mode*4 *5			-	25	150	-	15	75		
		Increase during BGO operation	Data flash P/E		-	7	-	-	7	-		
			Code flash P/E		-	10	-	-	10	-		
	Low-speed mode*4				-	4.4	-	-	3	-		ICLK = 1 MHz
	Subosc-speed mode*4				-	3	-	-	2	-		ICLK = 32.768 kHz
	Software Standby mode				-	2.4	110	-	1.2	55		-
	Deep Software Standby mode	Power supplied to Standby SRAM and USB resume detecting unit			-	37	255	-	37	255	μA	VBAT ≠ VCC
					-	37	285	-	37	285		VBAT = VCC
		Power not supplied to SRAM or USB resume detecting unit	Power-on reset circuit low-power function disabled		-	25	50	-	25	50		VBAT ≠ VCC
					-	25	80	-	25	80		VBAT = VCC
			Power-on reset circuit low-power function enabled		-	16	35	-	16	35		VBAT ≠ VCC
					-	16	65	-	16	65		VBAT = VCC
		Increase when the RTC and AGT are operating	When the low-speed on-chip oscillator (LOCO) is in use		-	9	-	-	9	-		-
			When a crystal oscillator for low clock loads is in use		-	1.0	-	-	1.0	-		-
			When a crystal oscillator for standard clock loads is in use		-	3.0	-	-	3.0	-		-
	RTC operating while VCC is off (with the battery backup function, only the RTC and sub-clock oscillator operate)		When a crystal oscillator for low clock loads is in use		-	0.9	-	-	0.9	-		V_{BATT} = 2.0 V, VCC = 0 V
					-	1.6	-	-	1.6	-		V_{BATT} = 3.3 V, VCC = 0 V
			When a crystal oscillator for standard clock loads is in use		-	1.7	-	-	1.7	-		V_{BATT} = 2.0 V, VCC = 0 V
					-	3.3	-	-	3.3	-		V_{BATT} = 3.3 V, VCC = 0 V
Analog power supply current	During 12-bit A/D conversion			AI_{CC}	-	0.8	1.1	-	0.8	1.1	mA	-
	During 12-bit A/D conversion with S/H amp				-	2.3	3.3	-	2.3	3.3	mA	-
	PGA (1ch)				-	1	3	-	1	3	mA	-
	ACMPHS (1unit)					100	150		100	150	μA	-
	Temperature sensor				-	0.1	0.2	-	0.1	0.2	mA	-
	During D/A conversion (per unit)	Without AMP output			-	0.1	0.2	-	0.1	0.2	mA	-
		With AMP output			-	0.5	0.8	-	0.5	0.8	mA	-
	Waiting for A/D, D/A conversion (all units)				-	0.9	1.6	-	0.9	1.6	mA	-
	ADC12, DAC12 in standby modes (all units)*8				-	2	6	-	2	6	μA	-
Reference power supply current (VREFH0)	During 12-bit A/D conversion (unit 0)			AI_{REFH0}	-	70	120	-	70	120	μA	-
	Waiting for 12-bit A/D conversion (unit 0)				-	0.07	0.4	-	0.07	0.4	μA	-
	ADC12 in standby modes (unit 0)				-	0.07	0.2	-	0.07	0.2	μA	-

Table 2.7 Operating and standby current (2 of 2)

Item			Symbol	LDO mode Min	LDO mode Typ	LDO mode Max	DCDC mode Min	DCDC mode Typ	DCDC mode Max	Unit	Test conditions
Reference power supply current (VREFH)	During 12-bit A/D conversion (unit 1)		AI_{REFH}	-	70	120	-	70	120	μA	-
	During D/A conversion (per unit)	Without AMP output		-	0.24	0.4	-	0.24	0.4	mA	-
		With AMP ouput		-	0.1	0.2	-	0.1	0.2	mA	-
	Waiting for 12-bit A/D (unit 1), D/A (all units) conversion			-	0.07	0.4	-	0.07	0.4	μA	-
	ADC12 unit 1 in standby modes			-	0.07	0.2	-	0.07	0.2	μA	-
USB operating current	Low speed	USB	$I_{CCUSBLS}$	-	3.5	6.5	-	3.5	6.5	mA	VCC_USB
		USBHS		-	10.5	13.5	-	10.5	13.5	mA	VCC_USBHS = AVCC_USBHS (PHYSET.HSEB = 0)
		USBHS		-	2.8	3.6	-	2.8	3.6	mA	VCC_USBHS = AVCC_USBHS (PHYSET.HSEB = 1)
	Full speed	USB	$I_{CCUSBFS}$	-	4.0	10.0	-	4.0	10.0	mA	VCC_USB
		USBHS		-	14	22	-	14	22	mA	VCC_USBHS = AVCC_USBHS (PHYSET.HSEB = 0)
		USBHS		-	6.5	13.0	-	6.5	13.0	mA	VCC_USBHS = AVCC_USBHS (PHYSET.HSEB = 1)
	High speed	USBHS	$I_{CCUSBHS}$	-	50	65	-	50	65	mA	VCC_USBHS = AVCC_USBHS
	Standby mode (direct power down)	USBHS	$I_{CCUSBSBY}$	-	0.5	3.0	-	0.5	3.0	μA	VCC_USBHS = AVCC_USBHS

Note 1. Supply current values are with all output pins unloaded and all input pull-up MOS transistors in the off state.

Note 2. Measured with clocks supplied to the peripheral functions. This does not include the BGO operation.

Note 3. This does not include the BGO operation.

Note 4. Supply of the clock signal to peripherals is stopped in this state. This does not include the BGO operation.

Note 5. FCLK, BCLK, PCLKA, PCLKB, PCLKC, and PCLKD are set to be divided by 64 (3.75 MHz).

Note 6. When using ETHERC, PCLKA frequency is:
12.5MHz ≤ PCLKA ≤ 120MHz

Note 7. I_{CC} depends on $f_{(ICLK)}$ and is calculated as follows:
- High-speed mode (Maximum)
  - LDO mode: I_{CC} max = 0.90 [mA/MHz] x f [MHz] + 114 [mA]
  - DCDC mode: I_{CC} max = 0.35 [mA/MHz] x f [MHz] + 57 [mA]
- High-speed mode (Normal mode/all peripheral clocks disabled)
  - LDO mode: I_{CC} typ = 0.10 [mA/MHz] x f [MHz] + 6.9 [mA]
  - DCDC mode: I_{CC} typ = 0.06 [mA/MHz] x f [MHz] + 4.4 [mA]
- Low-speed mode (ICLK 1 MHz max)
  - LDO mode: I_{CC} typ = 0.10 [mA/MHz] x f [MHz] + 4.3 [mA]
  - DCDC mode: I_{CC} typ = 0.06 [mA/MHz] x f [MHz] + 3.0 [mA]
- Sleep mode
  - LDO mode: I_{CC} max = 0.15 [mA/MHz] x f [MHz] + 114 [mA]
  - DCDC mode: I_{CC} max = 0.07 [mA/MHz] x f [MHz] + 57 [mA]

Note 8. When the MSTPCRD.MSTPD16 (ADC120 Module Stop bit) and MSTPCRD. MSTPD15 (ADC121 Module Stop bit) are in the module-stop state.

2.2.6 VCC Rise and Fall Gradient and Ripple Frequency

Table 2.8 Rise and fall gradient characteristics

Item	Symbol	Min	Typ	Max	Unit	Test conditions
VCC rising gradient	SrVCC	0.0084	-	20	ms/V	-
VCC falling gradient*1	SfVCC	0.0084	-	-	ms/V	-

Note 1. This applies when VBATT is used.

Table 2.9 Rise and fall gradient and ripple frequency characteristics

The ripple voltage must meet the allowable ripple frequency $f_{r(VCC)}$ within the range between the VCC upper limit (3.6 V) and lower limit (2.7 V). When the VCC change exceeds VCC ±10%, the allowable voltage change rising and falling gradient dt/dVCC must be met.

Item	Symbol	Min	Typ	Max	Unit	Test conditions
Allowable ripple frequency	$f_{r\ (VCC)}$	-	-	10	kHz	Figure 2.2 $V_{r\ (VCC)} \leq VCC \times 0.2$
		-	-	1	MHz	Figure 2.2 $V_{r\ (VCC)} \leq VCC \times 0.08$
		-	-	10	MHz	Figure 2.2 $V_{r\ (VCC)} \leq VCC \times 0.06$
Allowable voltage change rising and falling gradient	dt/dVCC	1.0	-	-	ms/V	When VCC change exceeds VCC ±10%

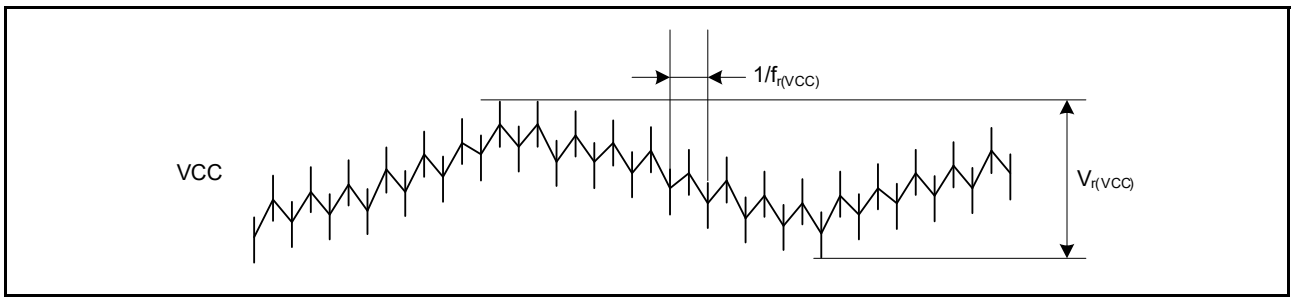

Figure 2.2 Ripple waveform

2.3 AC Characteristics

2.3.1 Frequency

Table 2.10 Operation frequency value in high-speed mode

Item			Symbol	Min	Typ	Max	Unit
Operation frequency	System clock (ICLK*2)		f	-	-	240	MHz
	Peripheral module clock (PCLKA)*2			-	-	120	
	Peripheral module clock (PCLKB)*2			-	-	60	
	Peripheral module clock (PCLKC)*2			-*3	-	60	
	Peripheral module clock (PCLKD)*2			-	-	120	
	Flash interface clock (FCLK)*2			-*1	-	60	
	External bus clock (BCLK)*2			-	-	120	
	EBCLK pin output			-	-	60	
	SDCLK pin output	VCC ≥ 3.0 V		-	-	120	

Note 1. FCLK must run at a frequency of at least 4 MHz when programming or erasing the flash memory.
Note 2. See section 9, Clock Generation Circuit in User's Manual for the relationship between the ICLK, PCLKA, PCLKB, PCLKC, PCLKD, FCLK, and BCLK frequencies.
Note 3. When the ADC12 is used, the PCLKC frequency must be at least 1 MHz.

Table 2.11 Operation frequency value in low-speed mode

Item		Symbol	Min	Typ	Max	Unit
Operation frequency	System clock (ICLK)*2	f	-	-	1	MHz
	Peripheral module clock (PCLKA)*2		-	-	1	
	Peripheral module clock (PCLKB)*2		-	-	1	
	Peripheral module clock (PCLKC)*2,*3		-*3	-	1	
	Peripheral module clock (PCLKD)*2		-	-	1	
	Flash interface clock (FCLK)*1, *2		-	-	1	
	External bus clock (BCLK)		-	-	1	
	EBCLK pin output		-	-	1	

Note 1. Programming or erasing the flash memory is disabled in low-speed mode.
Note 2. See section 9, Clock Generation Circuit in User's Manual for the relationship between the ICLK, PCLKA, PCLKB, PCLKC, PCLKD, FCLK, and BCLK frequencies.
Note 3. When the ADC12 is used, the PCLKC frequency must be set to at least 1 MHz.

Table 2.12 Operation frequency value in Subosc-speed mode

Item		Symbol	Min	Typ	Max	Unit
Operation frequency	System clock (ICLK)*2	f	29.4	-	36.1	kHz
	Peripheral module clock (PCLKA)*2		-	-	36.1	
	Peripheral module clock (PCLKB)*2		-	-	36.1	
	Peripheral module clock (PCLKC)*2,*3		-	-	36.1	
	Peripheral module clock (PCLKD)*2		-	-	36.1	
	Flash interface clock (FCLK)*1, *2		29.4	-	36.1	
	External bus clock (BCLK)*2		-	-	36.1	
	EBCLK pin output		-	-	36.1	

Note 1. Programming or erasing the flash memory is disable in Subosc-speed mode.
Note 2. See section 9, Clock Generation Circuit in User's Manual for the relationship between the ICLK, PCLKA, PCLKB, PCLKC, PCLKD, FCLK, and BCLK frequencies.
Note 3. The ADC12 cannot be used.

2.3.2 Clock Timing

Table 2.13 Clock timing except for sub-clock oscillator

Item		Symbol	Min	Typ	Max	Unit	Test conditions
EBCLK pin output cycle time		t_{Bcyc}	16.6	-	-	ns	Figure 2.3
EBCLK pin output high pulse width		t_{CH}	3.3	-	-	ns	
EBCLK pin output low pulse width		t_{CL}	3.3	-	-	ns	
EBCLK pin output rise time		t_{Cr}	-	-	5.0	ns	
EBCLK pin output fall time		t_{Cf}	-	-	5.0	ns	
SDCLK pin output cycle time		t_{SDcyc}	8.33	-	-	ns	
SDCLK pin output high pulse width		t_{CH}	1.0	-	-	ns	
SDCLK pin output low pulse width		t_{CL}	1.0	-	-	ns	
SDCLK pin output rise time		t_{Cr}	-	-	3.0	ns	
SDCLK pin output fall time		t_{Cf}	-	-	3.0	ns	
EXTAL external clock input cycle time		t_{EXcyc}	41.66	-	-	ns	Figure 2.4
EXTAL external clock input high pulse width		t_{EXH}	15.83	-	-	ns	
EXTAL external clock input low pulse width		t_{EXL}	15.83	-	-	ns	
EXTAL external clock rise time		t_{EXr}	-	-	5.0	ns	
EXTAL external clock fall time		t_{EXf}	-	-	5.0	ns	
Main clock oscillator frequency		f_{MAIN}	8	-	24	MHz	-
Main clock oscillation stabilization wait time (crystal) *1		$t_{MAINOSCWT}$	-	-	-*1	ms	Figure 2.5
LOCO clock oscillation frequency		f_{LOCO}	29.4912	32.768	36.0448	kHz	-
LOCO clock oscillation stabilization wait time		t_{LOCOWT}	-	-	60.4	μs	Figure 2.6
ILOCO clock oscillation frequency		f_{ILOCO}	13.5	15	16.5	kHz	-
MOCO clock oscillation frequency		F_{MOCO}	7.2	8	8.8	MHz	-
MOCO clock oscillation stabilization wait time		t_{MOCOWT}	-	-	15.0	μs	-
HOCO clock oscillator oscillation frequency	Without FLL	f_{HOCO16}	15.61	16	16.39	MHz	–20 ≤ Ta ≤ 105°C
		f_{HOCO18}	17.56	18	18.44		
		f_{HOCO20}	19.52	20	20.48		
		f_{HOCO16}	15.52	16	16.48		–40 ≤ Ta ≤ –20°C
		f_{HOCO18}	17.46	18	18.54		
		f_{HOCO20}	19.40	20	20.60		
	With FLL	f_{HOCO16}	15.91	16	16.09		SOSC frequency is 32.768kHz ± 50ppm
		f_{HOCO18}	17.90	18	18.10		
		f_{HOCO20}	19.89	20	20.11		
HOCO clock oscillation stabilization wait time *2		t_{HOCOWT}	-	-	64.7	μs	-
FLL stabilization wait time		t_{FLLWT}	-	-	3	ms	-
PLL clock frequency		f_{PLL}	120	-	240	MHz	-
PLL clock oscillation stabilization wait time		t_{PLLWT}	-	-	174.9	μs	Figure 2.7

Note 1. When setting up the main clock oscillator, ask the oscillator manufacturer for an oscillation evaluation and use the results as the recommended oscillation stabilization time. Set the MOSCWTCR register to a value equal to or greater than the recommended value.
After changing the setting in the MOSCCR.MOSTP bit to start main clock operation, read the OSCSF.MOSCSF flag to confirm that it is 1, and then start using the main clock oscillator.

Note 2. This is the time from release from reset state until the HOCO oscillation frequency (fHOCO) reaches the range for guaranteed operation.

Table 2.14 Clock timing for the sub-clock oscillator

Item	Symbol	Min	Typ	Max	Unit	Test conditions
Sub-clock frequency	f_{SUB}	-	32.768	-	kHz	-
Sub-clock oscillation stabilization wait time	$t_{SUBOSCWT}$	-	-	-*1	s	Figure 2.8

Note 1. When setting up the sub-clock oscillator, ask the oscillator manufacturer for an oscillation evaluation and use the results as the recommended oscillation stabilization time. After changing the setting in the SOSCCR.SOSTP bit to start sub-clock operation, only start using the sub-clock oscillator after the sub-clock oscillation stabilization time elapses with an adequate margin. Two times the oscillation wait time is recommended.

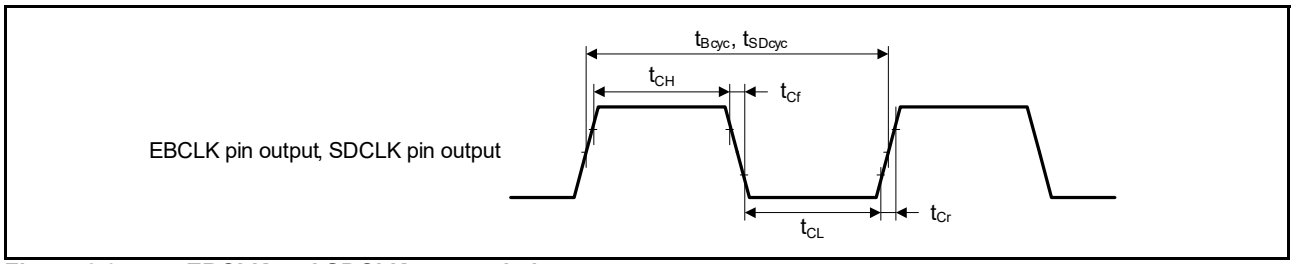

Figure 2.3 EBCLK and SDCLK output timing

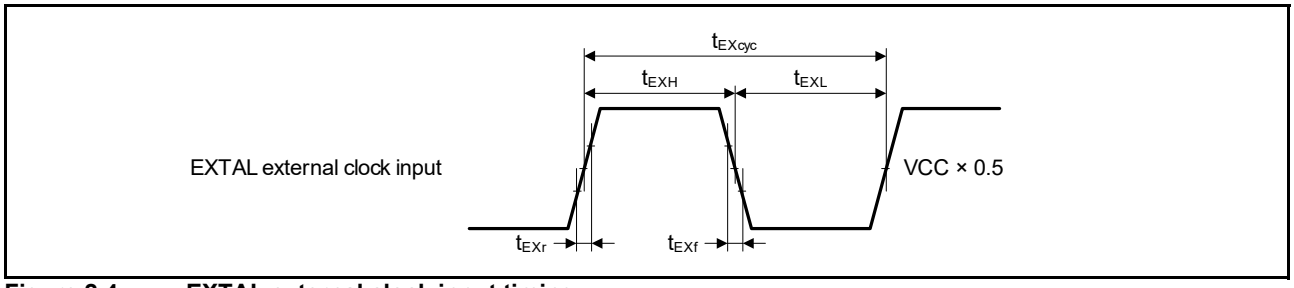

Figure 2.4 EXTAL external clock input timing

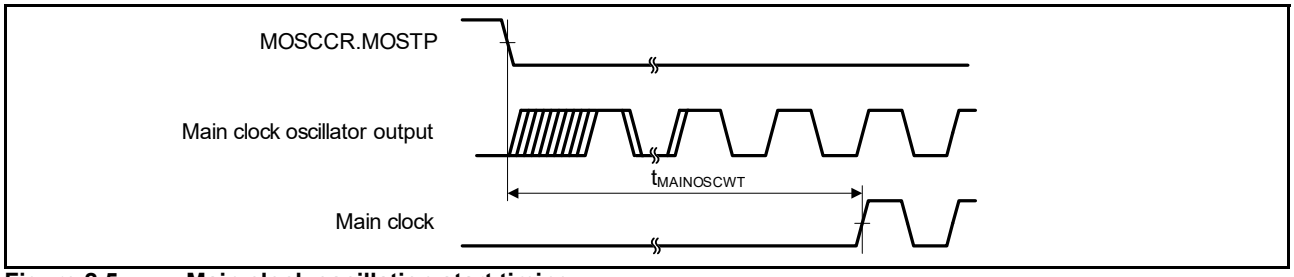

Figure 2.5 Main clock oscillation start timing

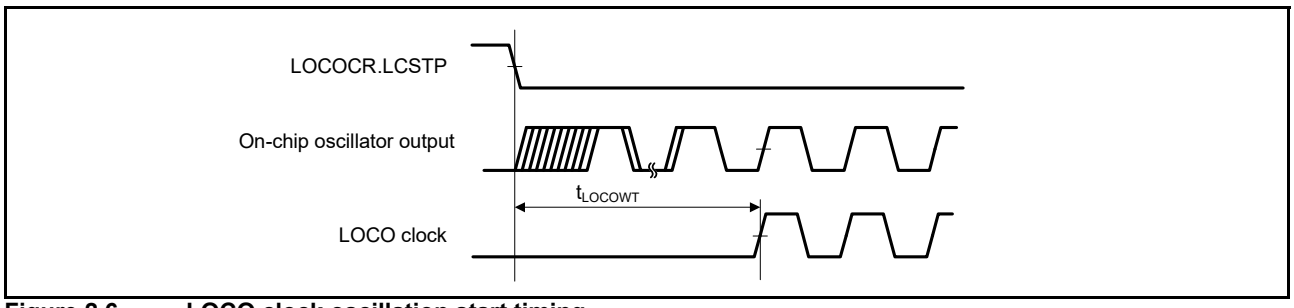

Figure 2.6 LOCO clock oscillation start timing

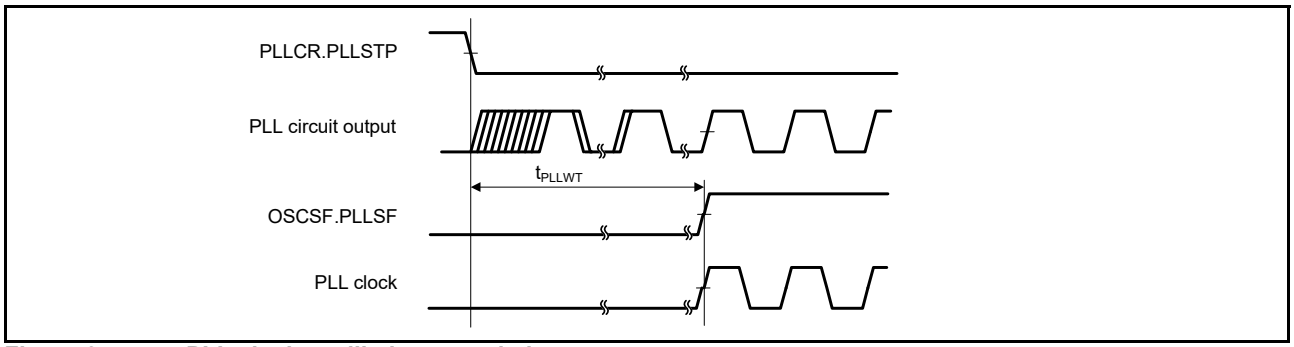

Figure 2.7 PLL clock oscillation start timing

Note: Only operate the PLL is operated after main clock oscillation has stabilized.

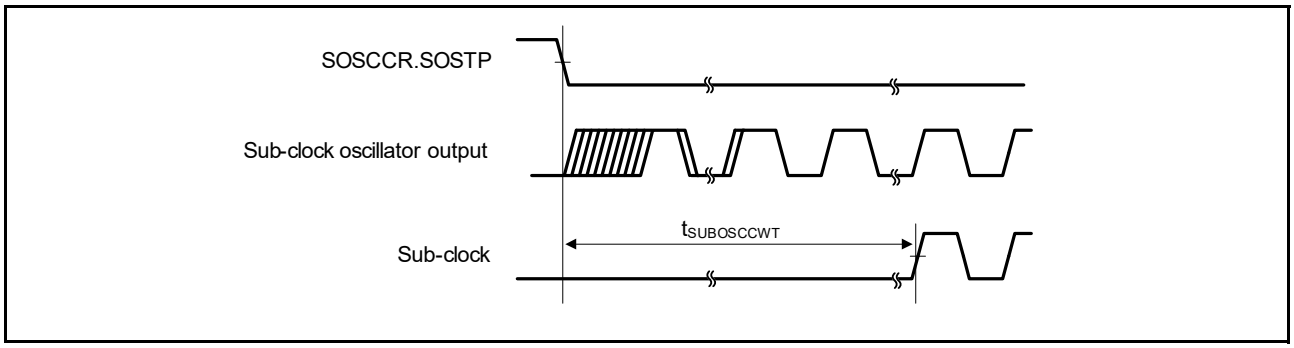

Figure 2.8 Sub-clock oscillation start timing

2.3.3 Reset Timing

Table 2.15 Reset timing

Item			Symbol	Min	Typ	Max	Unit	Test conditions
RES pulse width	Power-on	LDO mode	t_{RESWP}	1	-	-	ms	Figure 2.9
		DCDC mode		1.5	-	-	ms	
	Deep Software Standby mode		t_{RESWD}	0.6	-	-	ms	Figure 2.10
	Software Standby mode, Subosc-speed mode		t_{RESWS}	0.3	-	-	ms	
	All other		t_{RESW}	200	-	-	μs	
Wait time after RES cancellation			t_{RESWT}	-	-	33.4	μs	Figure 2.9
Wait time after internal reset cancellation (IWDT reset, WDT reset, software reset, SRAM parity error reset, SRAM DED error reset, bus master MPU error reset, bus slave MPU error reset, stack pointer error reset)			t_{RESW2}	-	-	390	μs	-

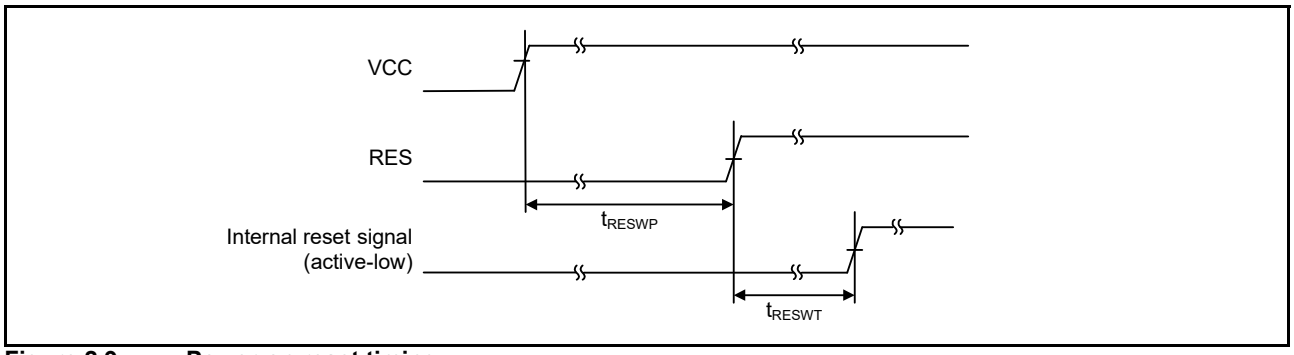

Figure 2.9 Power-on reset timing

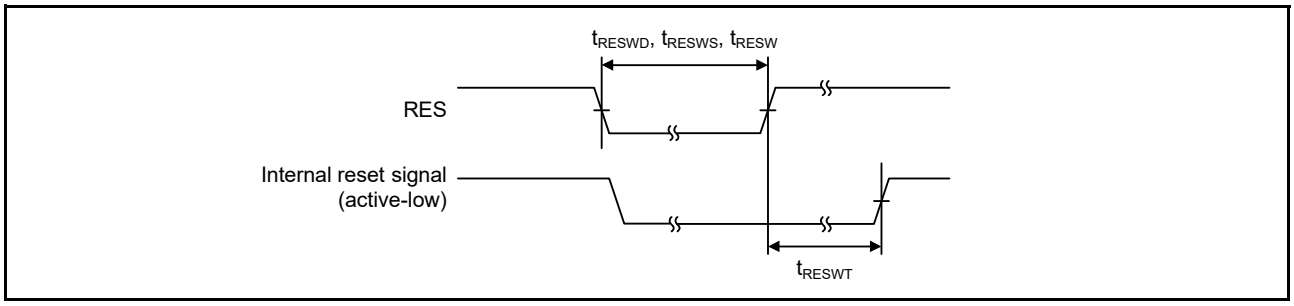

Figure 2.10 Reset input timing

2.3.4 Wakeup Timing and Duration

Table 2.16 Timing of recovery from low power modes and duration

Item			Symbol	Min	Typ	Max	Unit	Test conditions
Recovery time from Software Standby mode*1	Crystal resonator connected to main clock oscillator	System clock source is main clock oscillator*2	t_{SBYMC}	-	-	2.8	ms	Figure 2.11 The division ratio of all oscillators is 1.
		System clock source is PLL with main clock oscillator*3	t_{SBYPC}	-	-	3.2	ms	
	External clock input to main clock oscillator	System clock source is main clock oscillator*4	t_{SBYEX}	-	-	280	μs	
		System clock source is PLL with main clock oscillator*5	t_{SBYPE}	-	-	700	μs	
	System clock source is sub-clock oscillator*8		t_{SBYSC}	-	-	1.3	ms	
	System clock source is LOCO*8		t_{SBYLO}	-	-	1.4	ms	
	System clock source is HOCO clock oscillator*6		t_{SBYHO}	-	-	300	μs	
	System clock source is MOCO clock oscillator*7		t_{SBYMO}	-	-	300	μs	
Recovery time from Deep Software Standby mode			t_{DSBY}	-	-	1.0	ms	Figure 2.12
Wait time after cancellation of Deep Software Standby mode			t_{DSBYWT}	31	-	32	t_{cyc}	
Recovery time from Software Standby mode to Snooze mode	High-speed mode when system clock source is HOCO (20 MHz)		t_{SNZ}	-	-	68	μs	Figure 2.13
	High-speed mode when system clock source is MOCO (8 MHz)		t_{SNZ}	-	-	14*9	μs	
Normal mode duration*10	System clock source is main clock oscillator		t_{NML}	-*11	-	-	$t_{cycmosc}$	Figure 2.11
	System clock source is PLL with main clock oscillator							

Note 1. The recovery time is determined by the system clock source. When multiple oscillators are active, the recovery time can be determined with the following equation:
Total recovery time = recovery time for an oscillator as the system clock source + the longest oscillation stabilization time of any oscillators requiring longer stabilization times than the system clock source + 2 LOCO cycles (when LOCO is operating) + 3 SOSC cycles (when Subosc is oscillating and MSTPC0 = 0 (CAC module stop)).

Note 2. When the frequency of the crystal is 24 MHz (Main Clock Oscillator Wait Control Register (MOSCWTCR) is set to 05h). For other settings (MOSCWTCR is set to Xh), the recovery time can be determined with the following equation:
t_{SBYMC} (MOSCWTCR = Xh) = t_{SBYMC} (MOSCWTCR = 05h) + ($t_{MAINOSCWT}$ (MOSCWTCR = Xh) - $t_{MAINOSCWT}$ (MOSCWTCR = 05h))

Note 3. When the frequency of PLL is 240 MHz (Main Clock Oscillator Wait Control Register (MOSCWTCR) is set to 05h). For other settings (MOSCWTCR is set to Xh), the recovery time can be determined with the following

equation:
t_{SBYMC} (MOSCWTCR = Xh) = t_{SBYMC} (MOSCWTCR = 05h) + ($t_{MAINOSCWT}$ (MOSCWTCR = Xh) - $t_{MAINOSCWT}$ (MOSCWTCR = 05h))

Note 4. When the frequency of the external clock is 24 MHz (Main Clock Oscillator Wait Control Register (MOSCWTCR) is set to 00h). For other settings (MOSCWTCR is set to Xh), the recovery time can be determined with the following equation:
t_{SBYMC} (MOSCWTCR = Xh) = t_{SBYMC} (MOSCWTCR = 00h) + ($t_{MAINOSCWT}$ (MOSCWTCR = Xh) - $t_{MAINOSCWT}$ (MOSCWTCR = 00h))

Note 5. When the frequency of PLL is 240 MHz (Main Clock Oscillator Wait Control Register (MOSCWTCR) is set to 00h). For other settings (MOSCWTCR is set to Xh), the recovery time can be determined with the following equation:
t_{SBYMC} (MOSCWTCR = Xh) = t_{SBYMC} (MOSCWTCR = 00h) + ($t_{MAINOSCWT}$ (MOSCWTCR = Xh) - $t_{MAINOSCWT}$ (MOSCWTCR = 00h))

Note 6. The HOCO frequency is 20 MHz.

Note 7. The MOCO frequency is 8 MHz.

Note 8. In Subosc-speed mode, the sub-clock oscillator or LOCO continues oscillating in Software Standby mode.

Note 9. When the SNZCR.RXDREQEN bit is set to 0, 86 μs is added as the power supply recovery time.

Note 10. This defines the duration of Normal mode after a transition from Snooze to Normal mode.
The following cases are valid uses of the main clock oscillator:
- The crystal resonator is connected to main clock oscillator
- The external clock is input to main clock oscillator.

The following cases are excluded:
- The main clock resonator is not connected to the system clock source
- Transition is made from Software Standby to Normal mode.

Note 11. The same value as set in MOSCWTCR.MSTS[3:0]. Duration of Normal mode must be longer than the main clock oscillator wait time.
MOSCWTCR: Main Clock Oscillator Wait Control Register
$t_{cycmosc}$: Main clock oscillator frequency cycle.

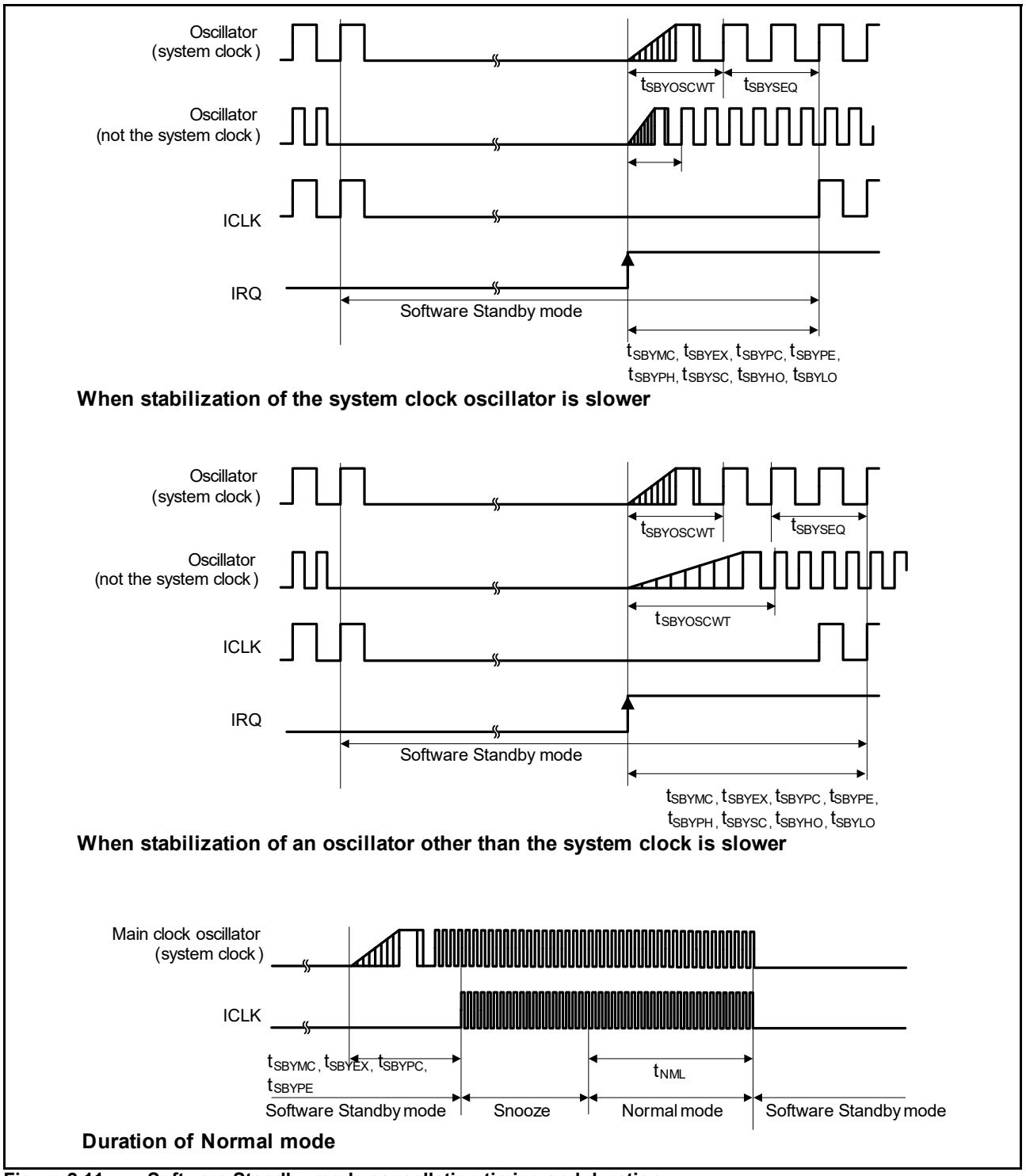

Figure 2.11 Software Standby mode cancellation timing and duration

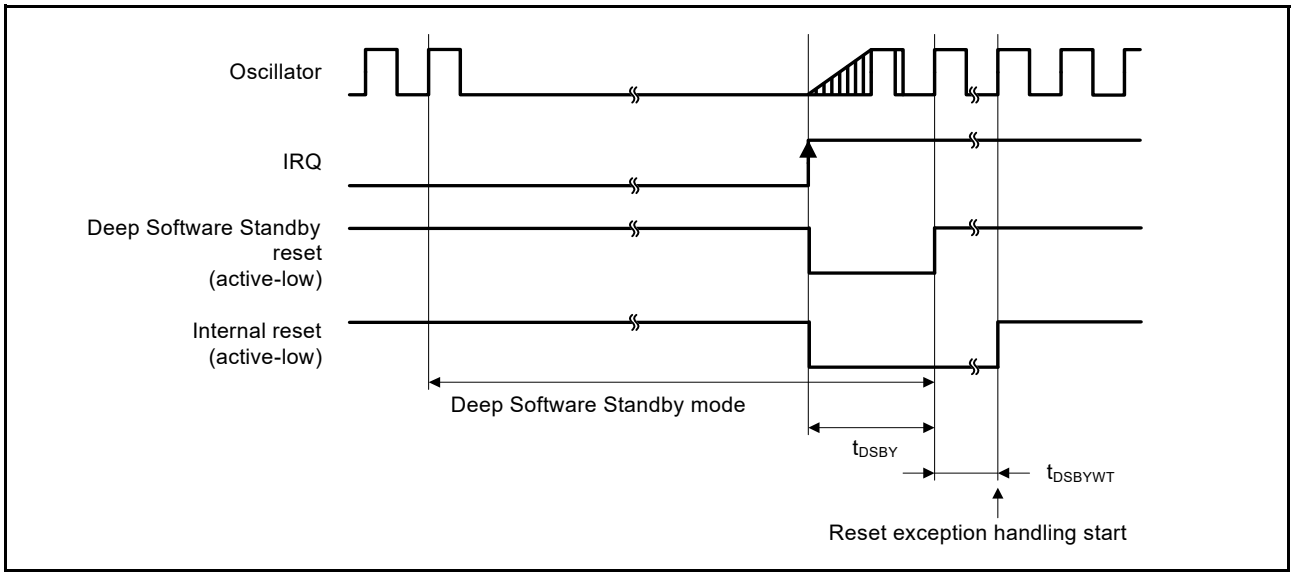

Figure 2.12 Deep Software Standby mode cancellation timing

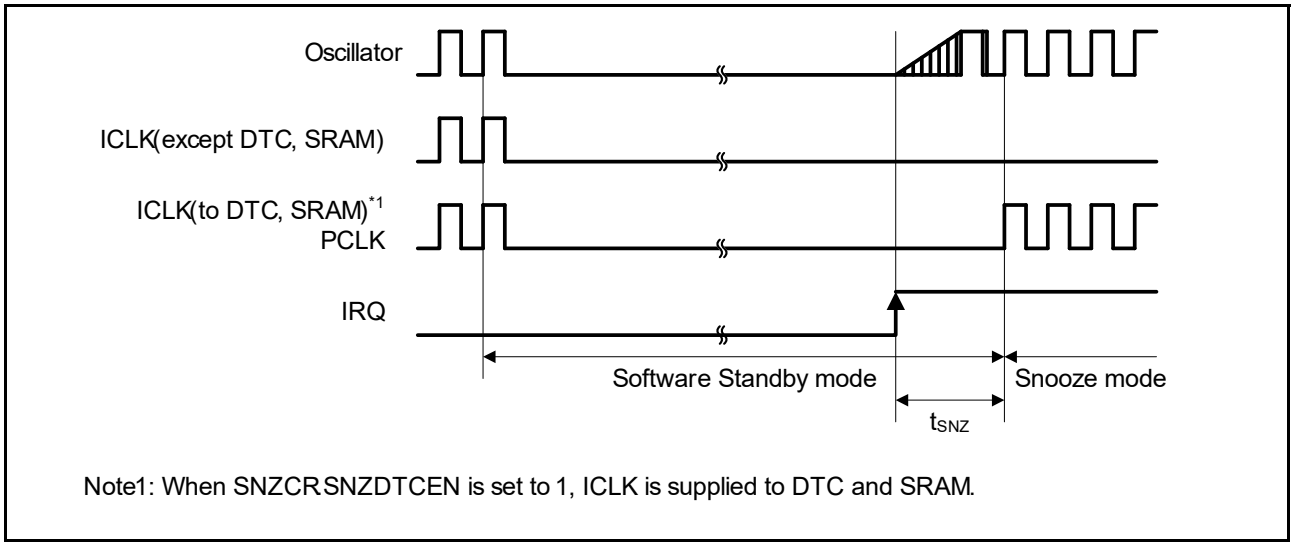

Figure 2.13 Recovery timing from Software Standby mode to Snooze mode

2.3.5 NMI and IRQ Noise Filter

Table 2.17 NMI and IRQ noise filter

Item	Symbol	Min	Typ	Max	Unit	Test conditions	
NMI pulse width	t_{NMIW}	200	-	-	ns	NMI digital filter disabled	$t_{Pcyc} \times 2 \leq 200$ ns
		$t_{Pcyc} \times 2$*1	-	-			$t_{Pcyc} \times 2 > 200$ ns
		200	-	-		NMI digital filter enabled	$t_{NMICK} \times 3 \leq 200$ ns
		$t_{NMICK} \times 3.5$*2	-	-			$t_{NMICK} \times 3 > 200$ ns
IRQ pulse width	t_{IRQW}	200	-	-	ns	IRQ digital filter disabled	$t_{Pcyc} \times 2 \leq 200$ ns
		$t_{Pcyc} \times 2$*1	-	-			$t_{Pcyc} \times 2 > 200$ ns
		200	-	-		IRQ digital filter enabled	$t_{IRQCK} \times 3 \leq 200$ ns
		$t_{IRQCK} \times 3.5$*3	-	-			$t_{IRQCK} \times 3 > 200$ ns

Note: 200 ns minimum in Software Standby mode.
Note 1. t_{Pcyc} indicates the PCLKB cycle.
Note 2. t_{NMICK} indicates the cycle of the NMI digital filter sampling clock.
Note 3. t_{IRQCK} indicates the cycle of the IRQi digital filter sampling clock.

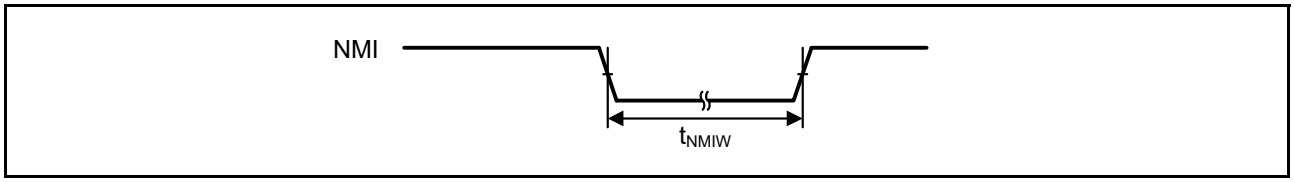

Figure 2.14 NMI interrupt input timing

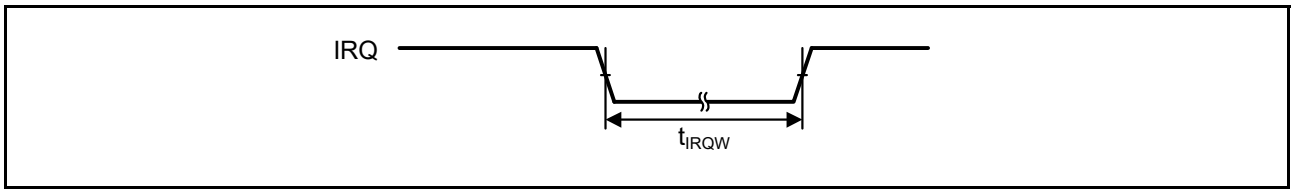

Figure 2.15 IRQ interrupt input timing

2.3.6 Bus Timing

Table 2.18 Bus timing

Condition 1: When using the CS area controller (CSC).
BCLK = 8 to 60 MHz
VCC = AVCC0 = VCC_USB = VBATT = 2.7 to 3.6 V, VREFH/VREFH0 = 2.7 V to AVCC0,
VCC_USBHS = AVCC_USBHS = 3.0 to 3.6 V
Output load conditions: VOH = VCC × 0.5, VOL = VCC × 0.5, C = 30 pF
EBCLK: High drive output is selected in the port drive capability bit in the PmnPFS register.
Others: Middle drive output is selected in the port drive capability bit in the PmnPFS register.

Condition 2: When using the SDRAM area controller (SDRAMC).
BCLK = SDCLK = 8 to 120 MHz
VCC = AVCC0 = VCC_USB = VBATT = 3.0 to 3.6 V, VREFH/VREFH0 = 3.0 V to AVCC0,
VCC_USBHS = AVCC_USBHS = 3.0 to 3.6 V
Output load conditions: VOH = VCC × 0.5, VOL = VCC × 0.5, C = 15 pF
High drive output is selected in the port drive capability bit in the PmnPFS register.

Condition 3: When using the SDRAM area controller (SDRAMC) and CS area controller (CSC) simultaneously.
BCLK = SDCLK = 8 to 60 MHz
VCC = AVCC0 = VCC_USB = VBATT = 3.0 to 3.6 V, VREFH/VREFH0 = 3.0 V to AVCC0,
VCC_USBHS = AVCC_USBHS = 3.0 to 3.6 V
Output load conditions: VOH = VCC × 0.5, VOL = VCC × 0.5, C = 15 pF
High drive output is selected in the port drive capability bit in the PmnPFS register.

Item	Symbol	Min	Max	Unit	Test conditions
Address delay	t_{AD}	-	12.5	ns	Figure 2.16 to Figure 2.19
Byte control delay	t_{BCD}	-	12.5	ns	
CS delay	t_{CSD}	-	12.5	ns	
RD delay	t_{RSD}	-	12.5	ns	
Read data setup time	t_{RDS}	12.5	-	ns	
Read data hold time	t_{RDH}	0	-	ns	
WR/WRn delay	t_{WRD}	-	12.5	ns	
Write data delay	t_{WDD}	-	12.5	ns	
Write data hold time	t_{WDH}	0	-	ns	
WAIT setup time	t_{WTS}	12.5	-	ns	Figure 2.20
WAIT hold time	t_{WTH}	0	-	ns	
Address delay 2 (SDRAM)	t_{AD2}	0.8	6.8	ns	Figure 2.21 to Figure 2.27
CS delay 2 (SDRAM)	t_{CSD2}	0.8	6.8	ns	
DQM delay (SDRAM)	t_{DQMD}	0.8	6.8	ns	
CKE delay (SDRAM)	t_{CKED}	0.8	6.8	ns	
Read data setup time 2 (SDRAM)	t_{RDS2}	2.9	-	ns	
Read data hold time 2 (SDRAM)	t_{RDH2}	1.5	-	ns	
Write data delay 2 (SDRAM)	t_{WDD2}	-	6.8	ns	
Write data hold time 2 (SDRAM)	t_{WDH2}	0.8	-	ns	
WE delay (SDRAM)	t_{WED}	0.8	6.8	ns	
RAS delay (SDRAM)	t_{RASD}	0.8	6.8	ns	
CAS delay (SDRAM)	t_{CASD}	0.8	6.8	ns	

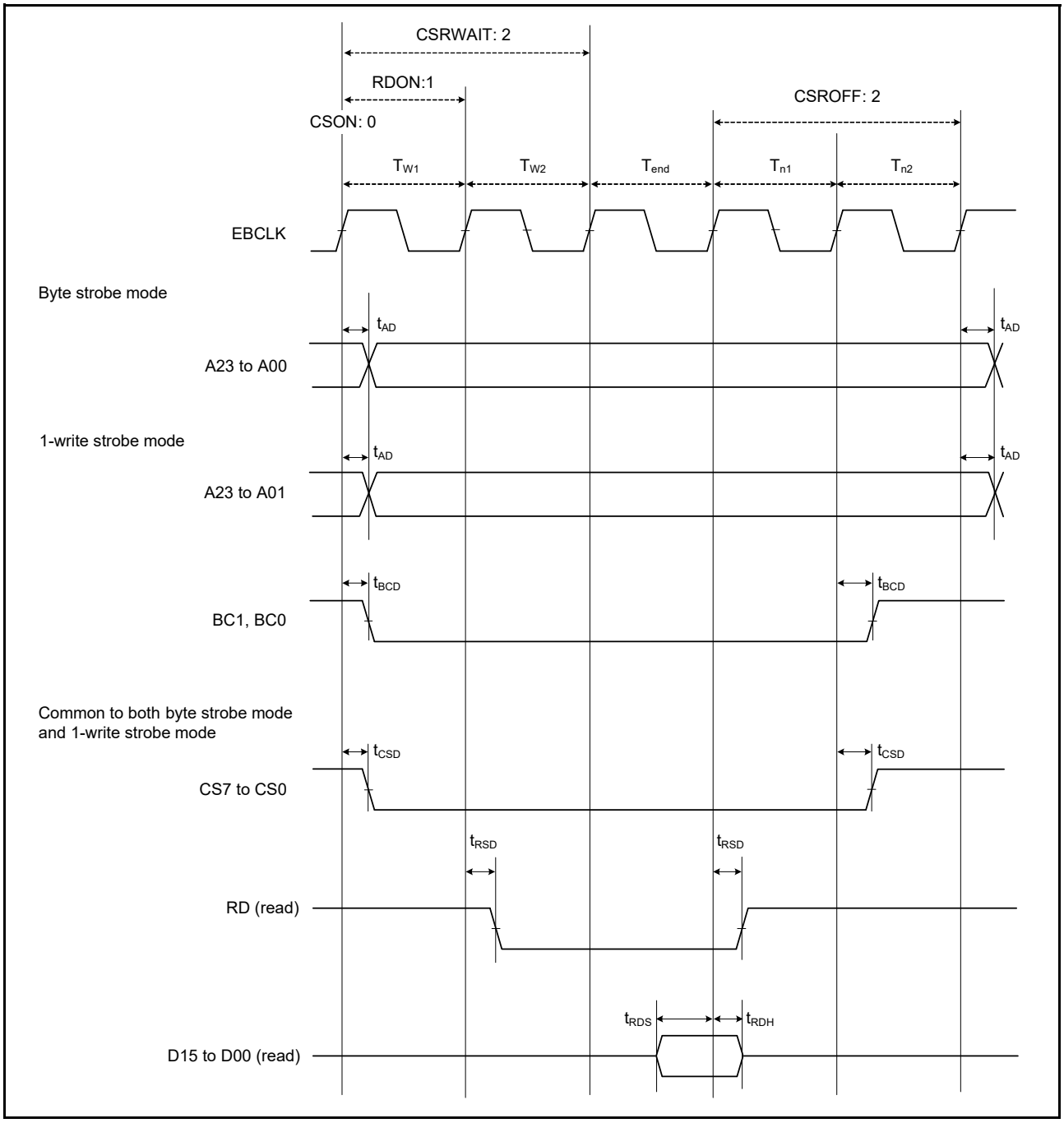

Figure 2.16 External bus timing for normal read cycle with bus clock synchronized

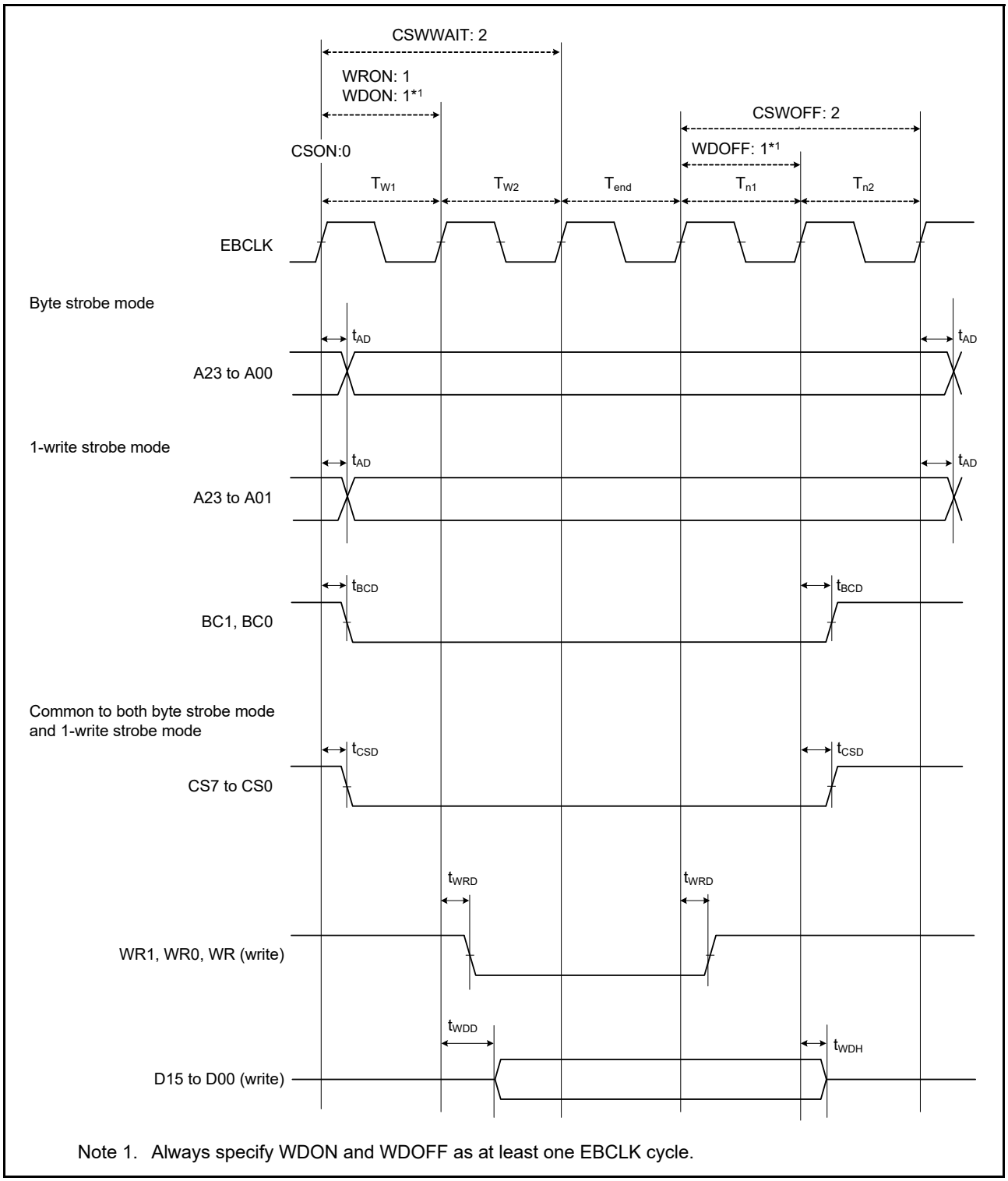

Note 1. Always specify WDON and WDOFF as at least one EBCLK cycle.

Figure 2.17 External bus timing for normal write cycle with bus clock synchronized

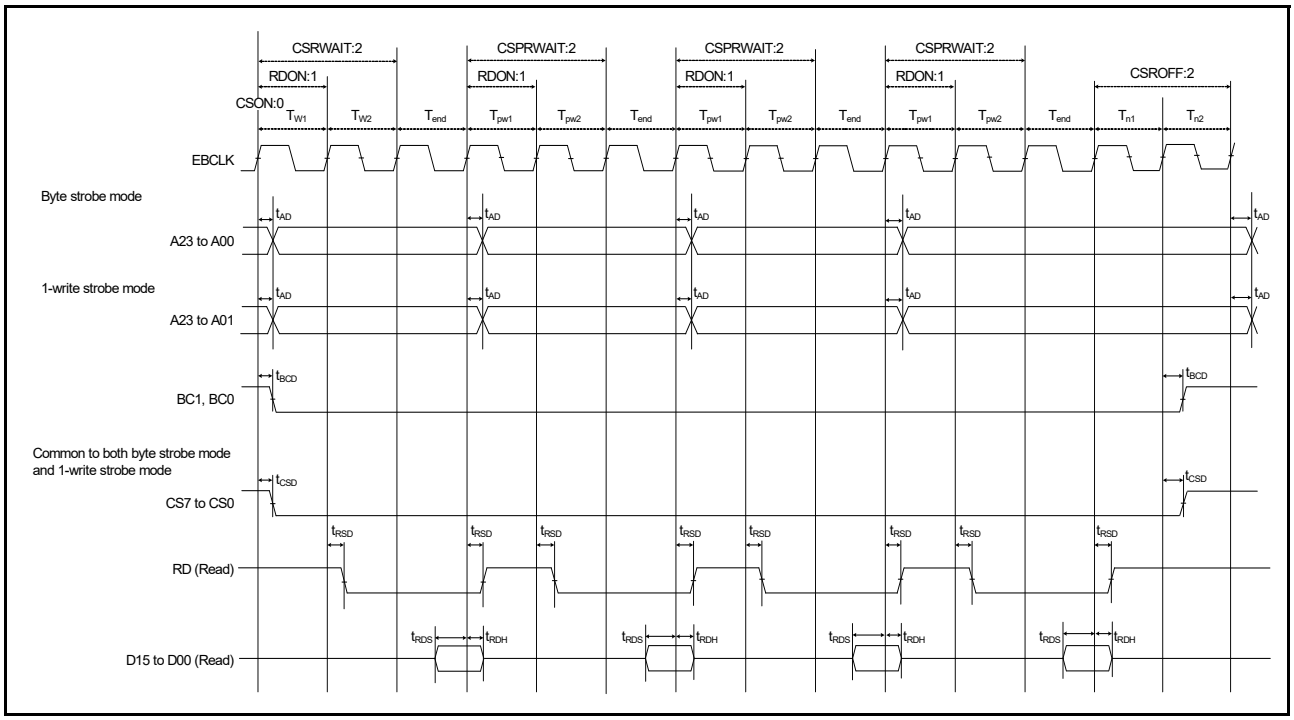

Figure 2.18 External bus timing for page read cycle with bus clock synchronized

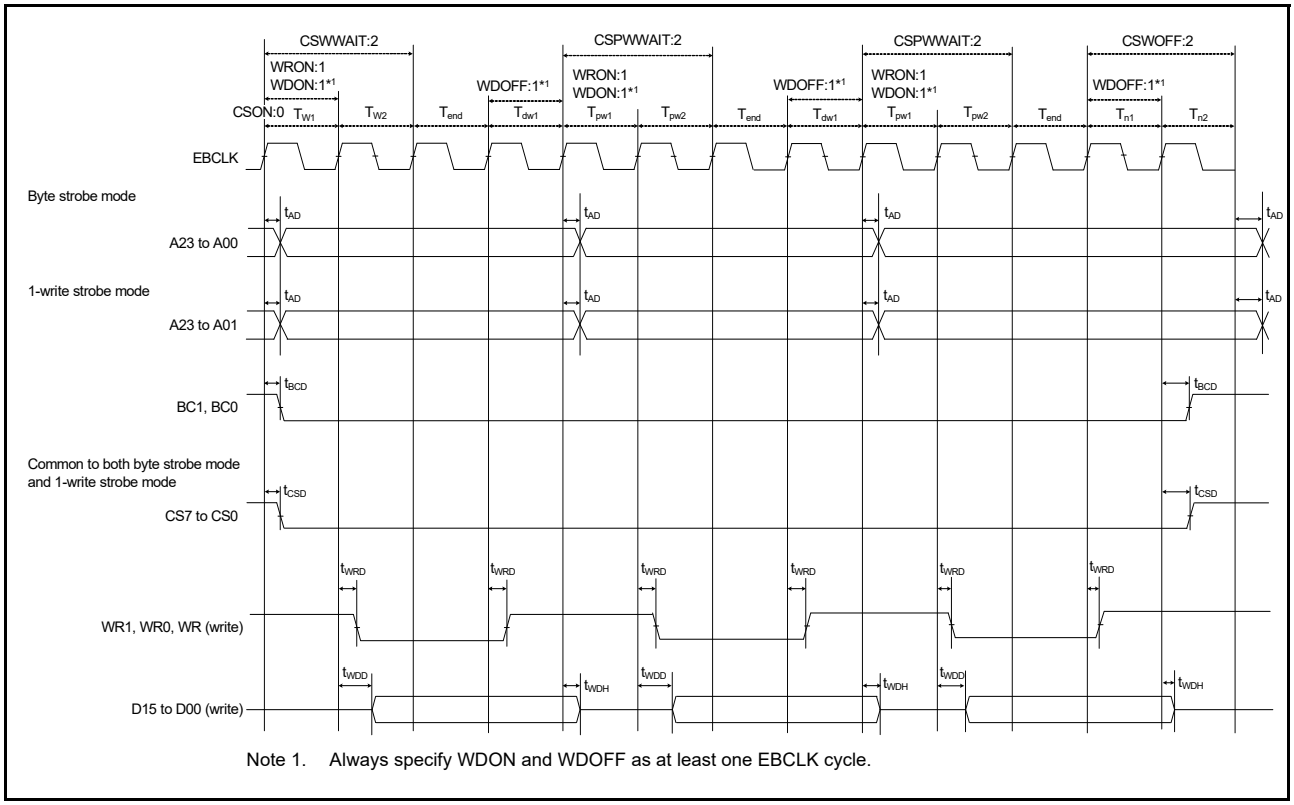

Note 1. Always specify WDON and WDOFF as at least one EBCLK cycle.

Figure 2.19 External bus timing for page write cycle with bus clock synchronized

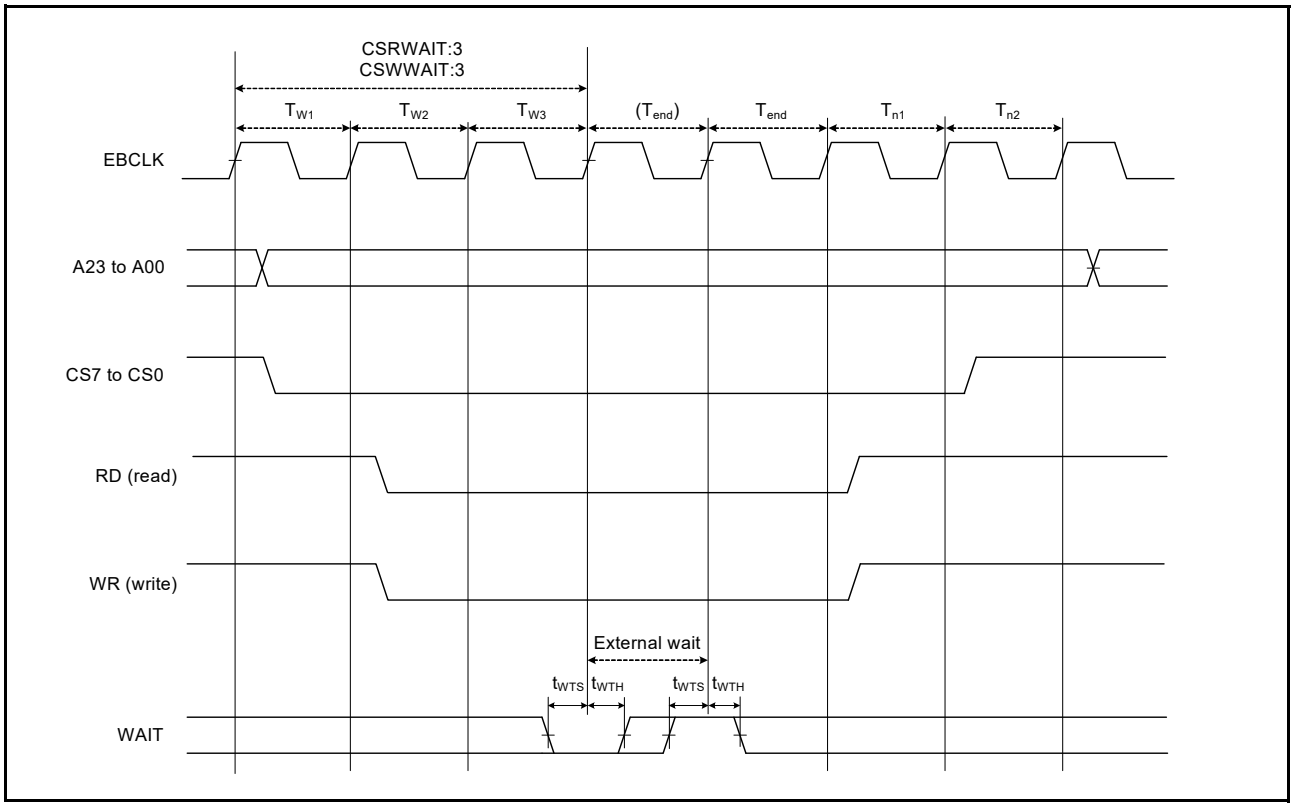

Figure 2.20 External bus timing for external wait control

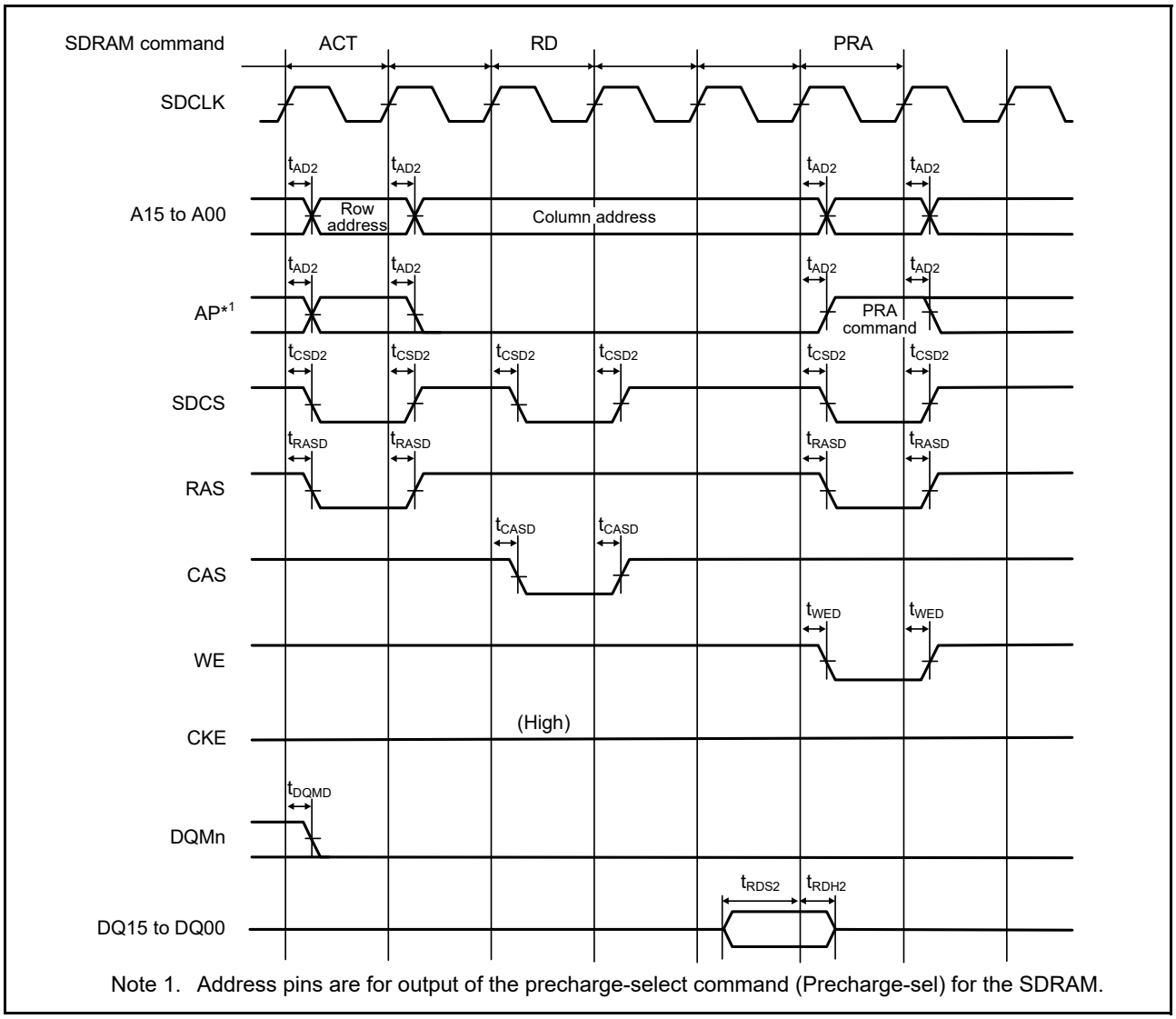

Figure 2.21 SDRAM single read timing

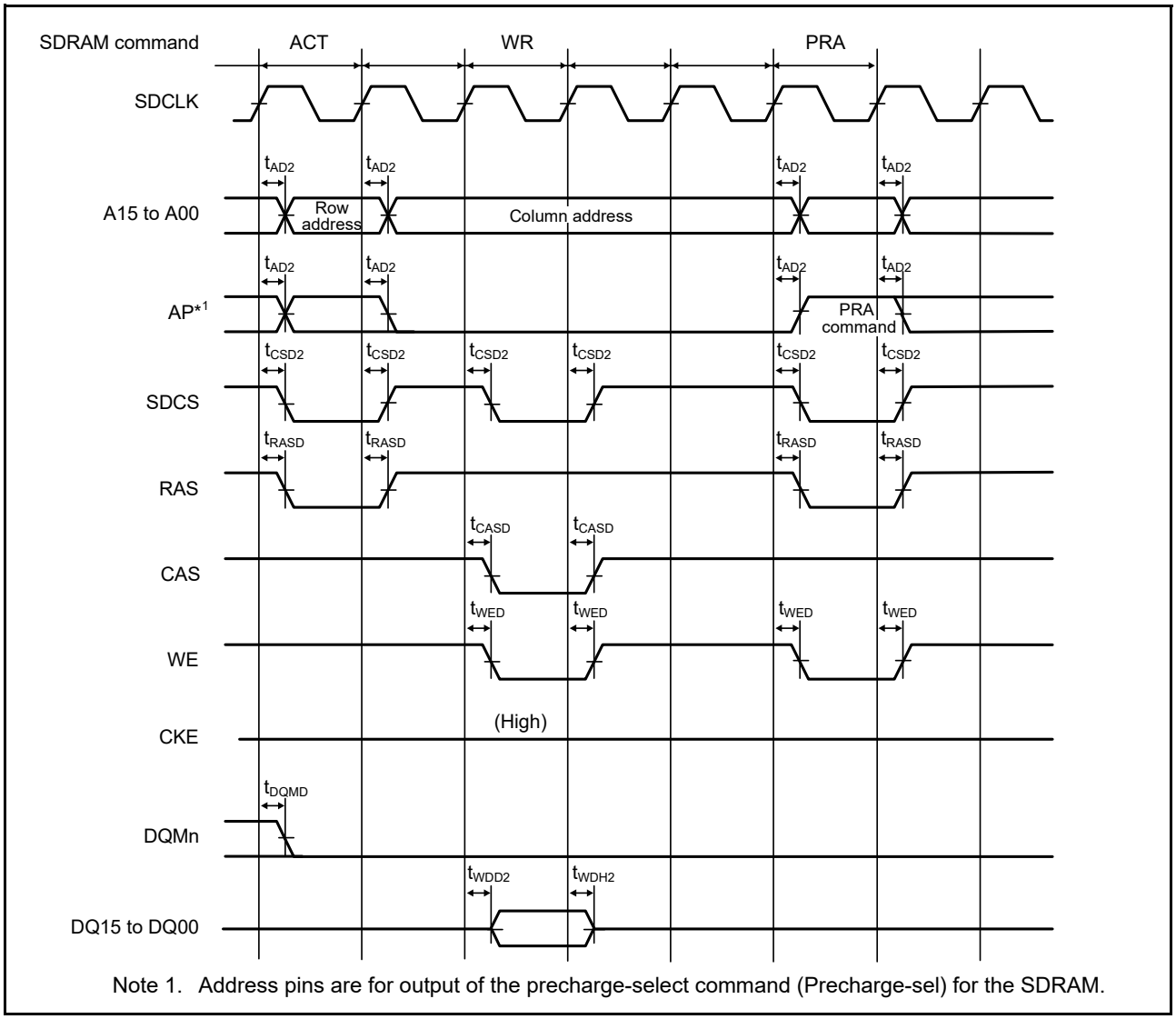

Figure 2.22 SDRAM single write timing

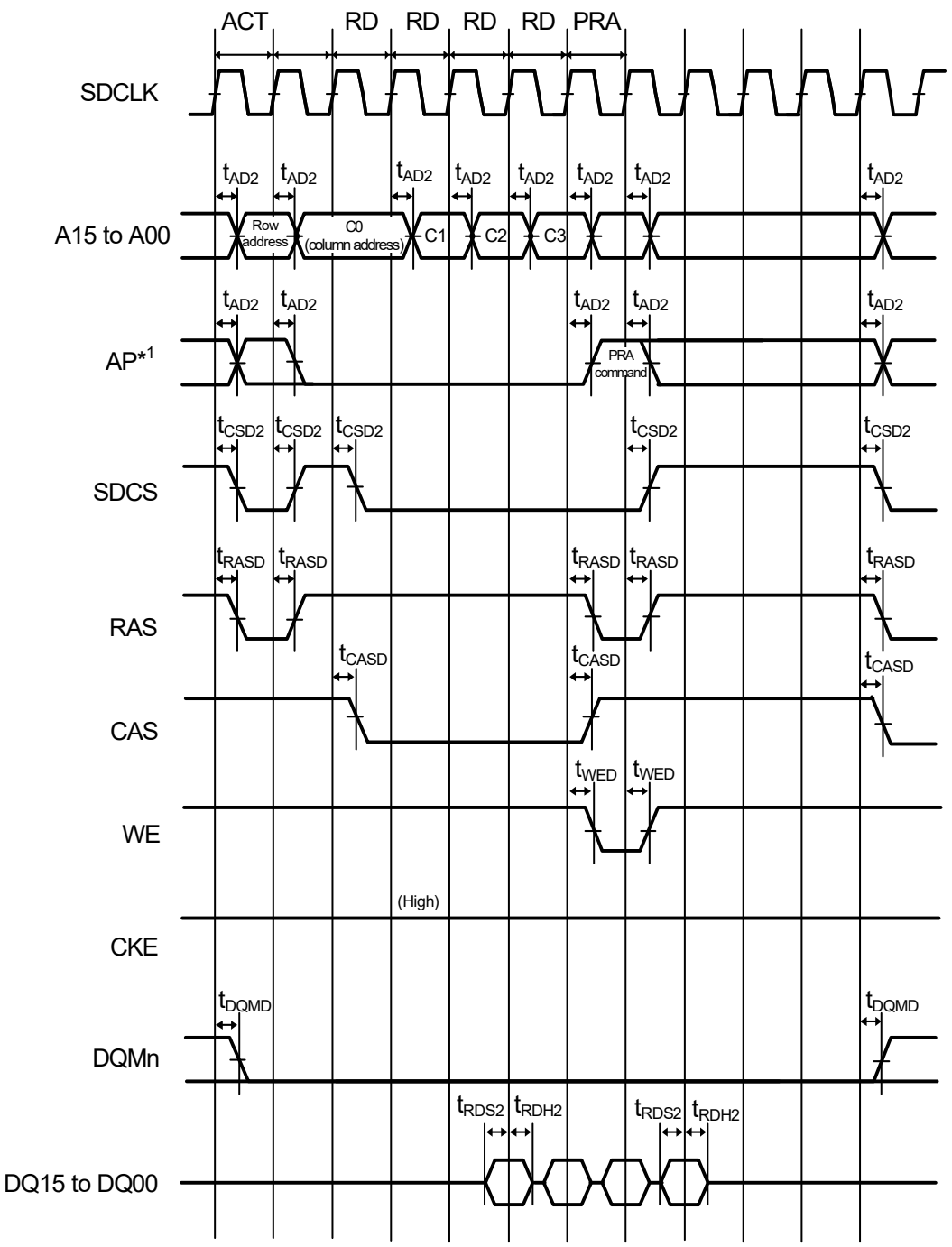

Note 1. Address pins are for output of the precharge-select command (Precharge-sel) for the SDRAM.

Figure 2.23 SDRAM multiple read timing

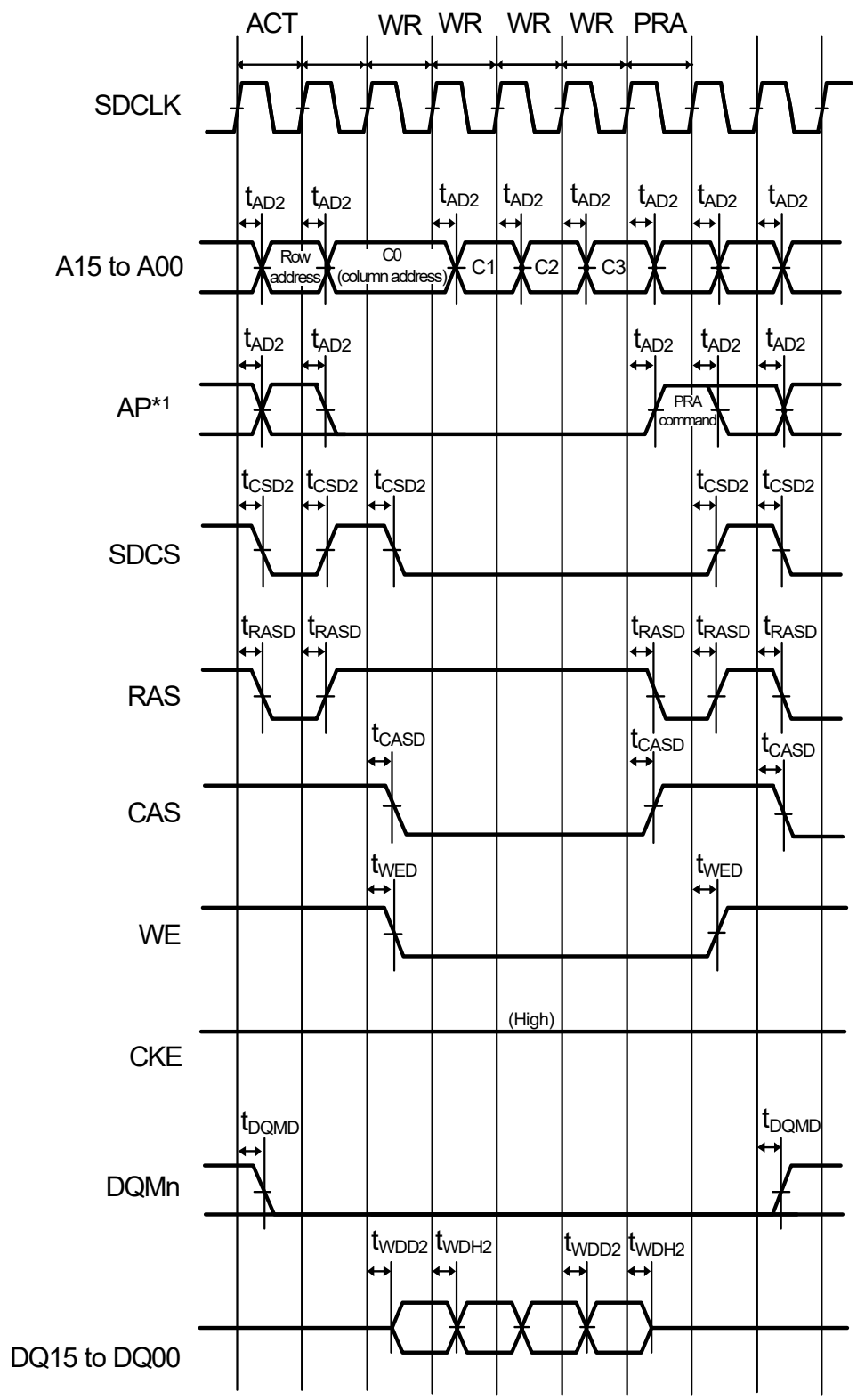

Note 1. Address pins are for output of the precharge-select command (Precharge-sel) for the SDRAM.

Figure 2.24 SDRAM multiple write timing

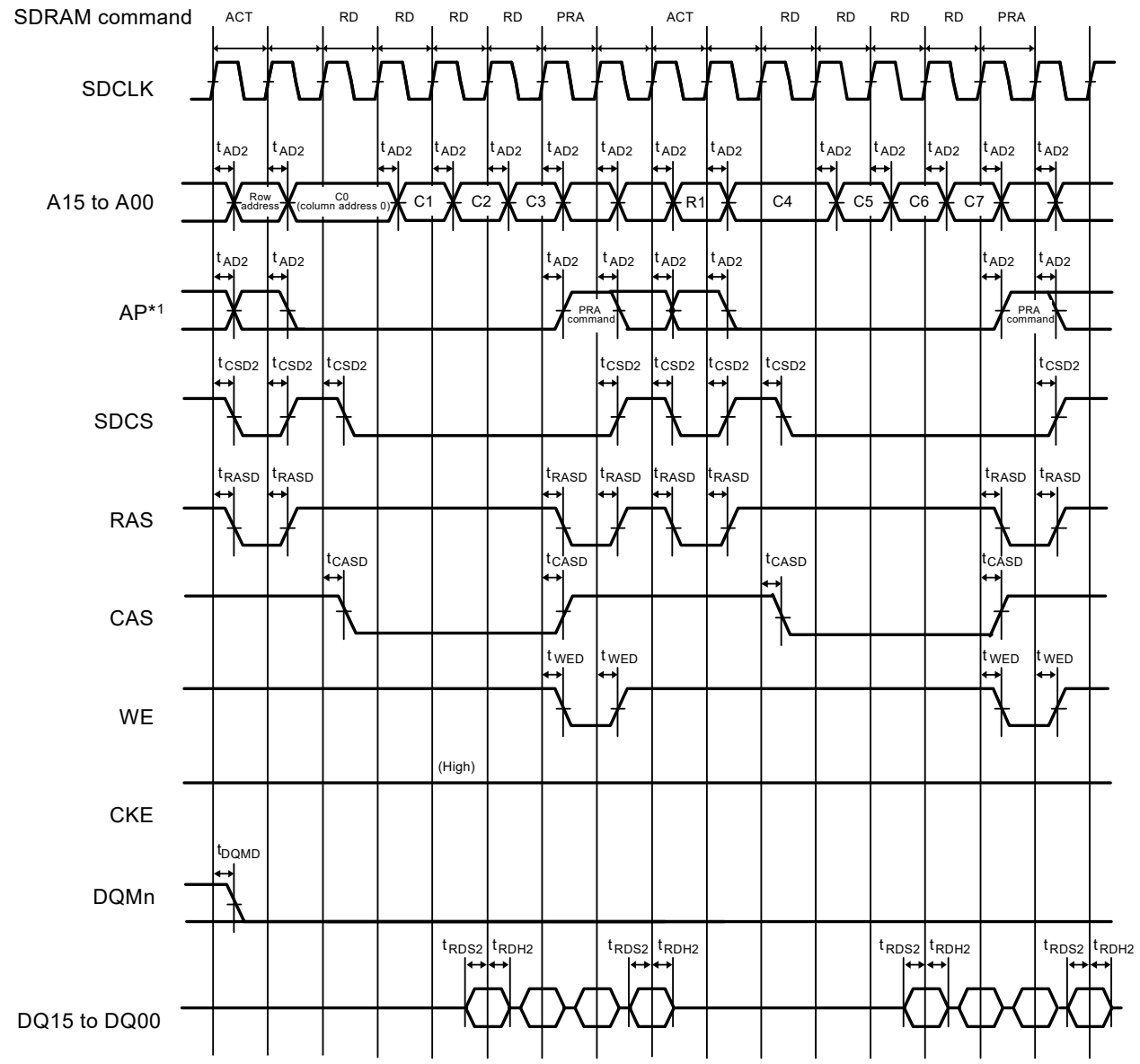

Note 1. Address pins are for output of the precharge-select command (Precharge-sel) for the SDRAM.

Figure 2.25 SDRAM multiple read line stride timing

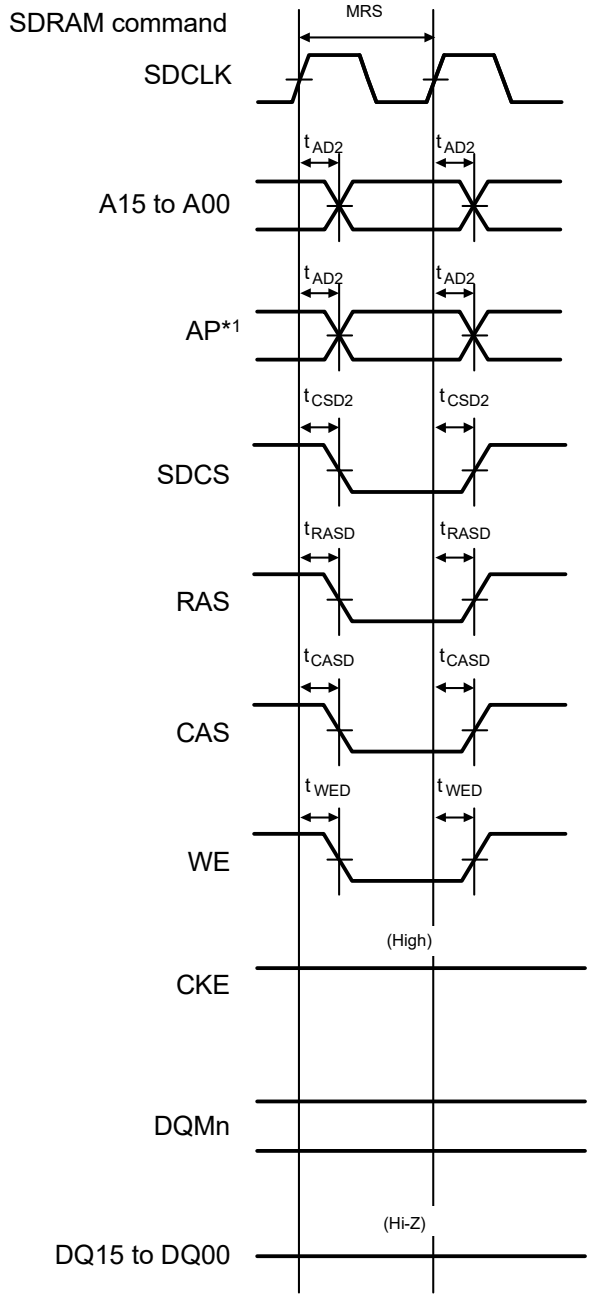

Note 1. Address pins are for output of the precharge-select command (Precharge-sel) for the SDRAM.

Figure 2.26 SDRAM mode register set timing

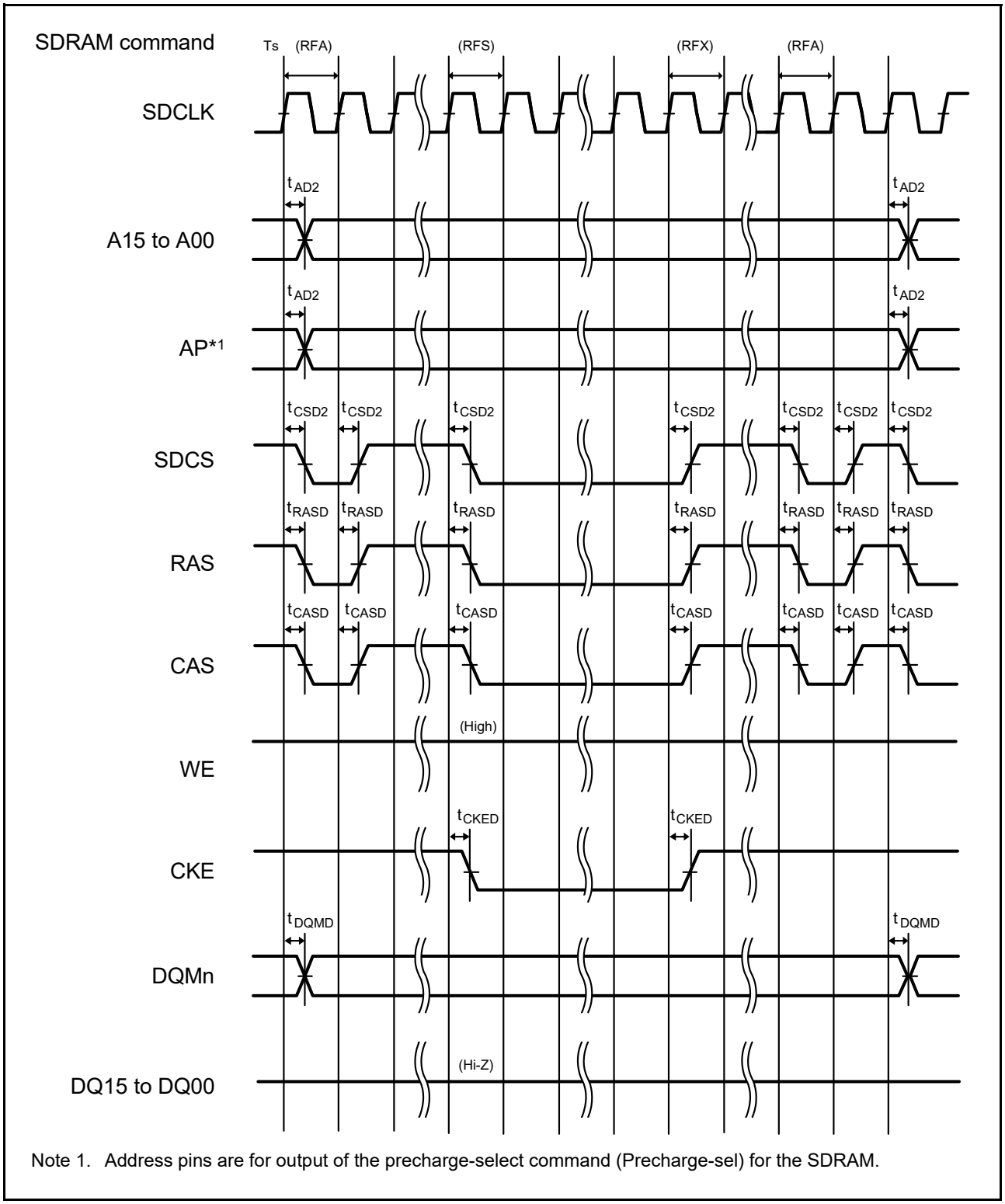

Note 1. Address pins are for output of the precharge-select command (Precharge-sel) for the SDRAM.

Figure 2.27 SDRAM self-refresh timing

2.3.7 I/O Ports, POEG, GPT32, AGT, KINT, and ADC12 Trigger Timing

Table 2.19 I/O ports, POEG, GPT32, AGT, KINT, and ADC12 trigger timing

GPT32 Conditions:
Middle drive output is selected in the port drive capability bit in the PmnPFS register for the following pins: GTIOC6A_A, GTIOC6B_A, GTIOC3A_B, GTIOC3B_B, GTIOC0A_B, GTIOC0B_B, GTIOC9A_B, GTIOC9B_B.
High drive output is selected in the port drive capability bit in the PmnPFS register for all other pins.

AGT Conditions:
Middle drive output is selected in the port drive capability bit in the PmnPFS register.

Item			Symbol	Min	Max	Unit	Test conditions
I/O ports	Input data pulse width		t_{PRW}	1.5	-	t_{Pcyc}	Figure 2.28
POEG	POEG input trigger pulse width		t_{POEW}	3	-	t_{Pcyc}	Figure 2.29
GPT32	Input capture pulse width	Single edge	t_{GTICW}	1.5	-	t_{PDcyc}	Figure 2.30
		Dual edge		2.5	-		
	GTIOCxY_Z output skew (x = 0 to 7, Y= A or B , Z = A or B)	Middle drive buffer	t_{GTISK}*2	-	4	ns	Figure 2.31
		High drive buffer		-	4		
	GTIOCxY_Z output skew (x = 8 to 13, Y = A or B, Z = A or B)	Middle drive buffer		-	4		
		High drive buffer		-	4		
	GTIOCxY_Z output skew (x = 0 to 13, Y = A or B, Z = A or B)	Middle drive buffer		-	6		
		High drive buffer		-	6		
	OPS output skew GTOUUP_x, GTOULO_x, GTOVUP_x, GTOVLO_x, GTOWUP_x, GTOWLO_x (x = A or B)		t_{GTOSK} *2	-	5	ns	Figure 2.32
GPT(PWM Delay Generation Circuit)	GTIOCxY_Z output skew (x = 0 to 3, Y = A or B, Z = A)		t_{HRSK}*3	-	2.0	ns	Figure 2.33
AGT	AGTIO, AGTEE input cycle		t_{ACYC}*1	100	-	ns	Figure 2.34
	AGTIO, AGTEE input high width, low width		t_{ACKWH}, t_{ACKWL}	40	-	ns	
	AGTIO, AGTO, AGTOA, AGTOB output cycle		t_{ACYC2}	62.5	-	ns	
ADC12	ADC12 trigger input pulse width		t_{TRGW}	1.5	-	t_{Pcyc}	Figure 2.35
KINT	KRn (n = 00 to 07) pulse width		t_{KR}	250	-	ns	Figure 2.36

Note 1. t_{Pcyc}: PCLKB cycle, t_{PDcyc}: PCLKD cycle.
Note 2. This skew applies when the same driver I/O is used. If the I/O of the middle and high drivers is mixed, operation is not guaranteed.
Note 3. The load is 30 pF.
Note 4. Constraints on AGTIO input: t_{Pcyc} × 2 (t_{Pcyc}: PCLKB cycle) < t_{ACYC}.

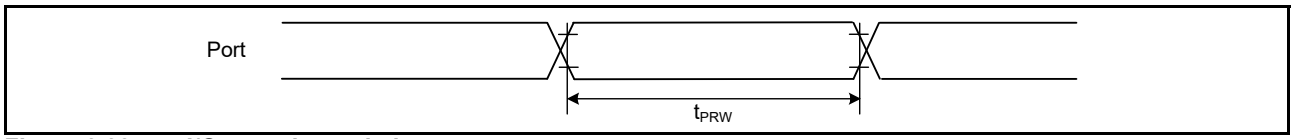

Figure 2.28 I/O ports input timing

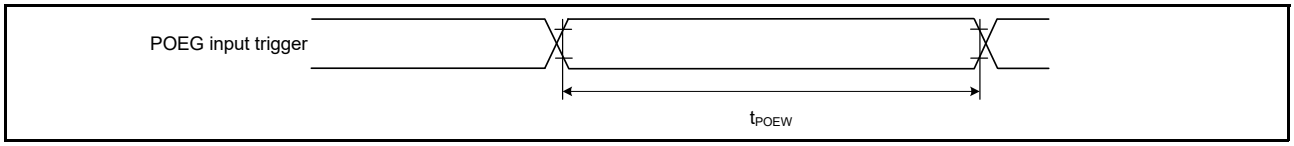

Figure 2.29 POEG input trigger timing

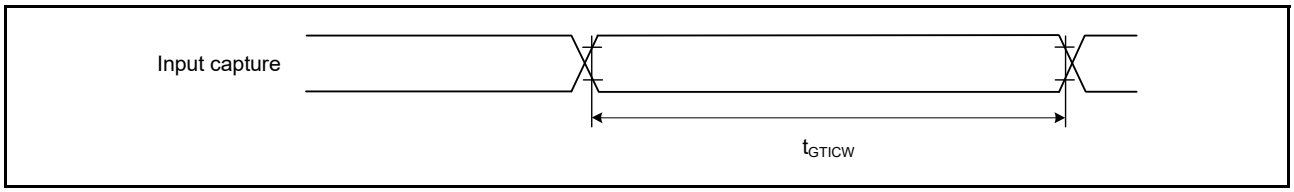

Figure 2.30 GPT32 input capture timing

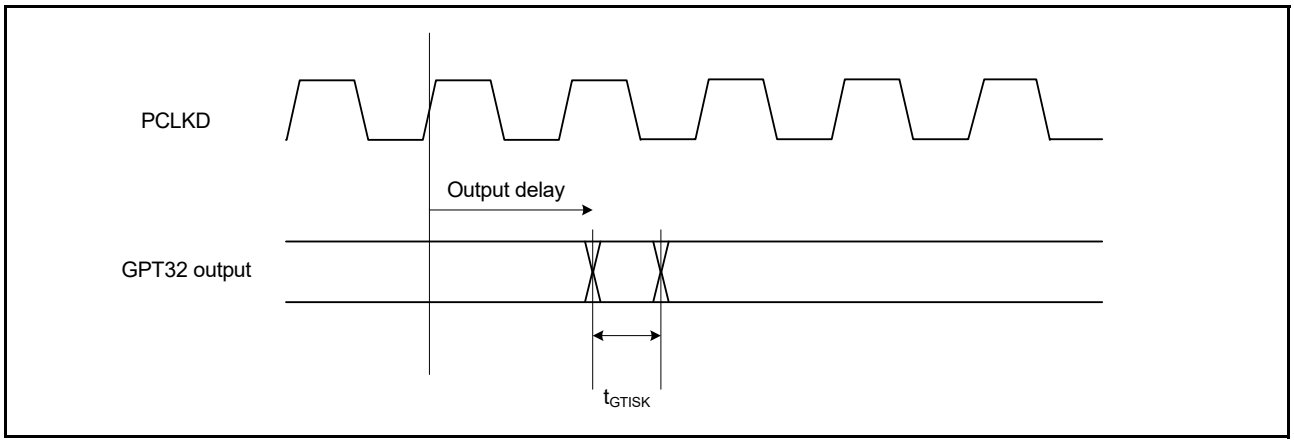

Figure 2.31 GPT32 output delay skew

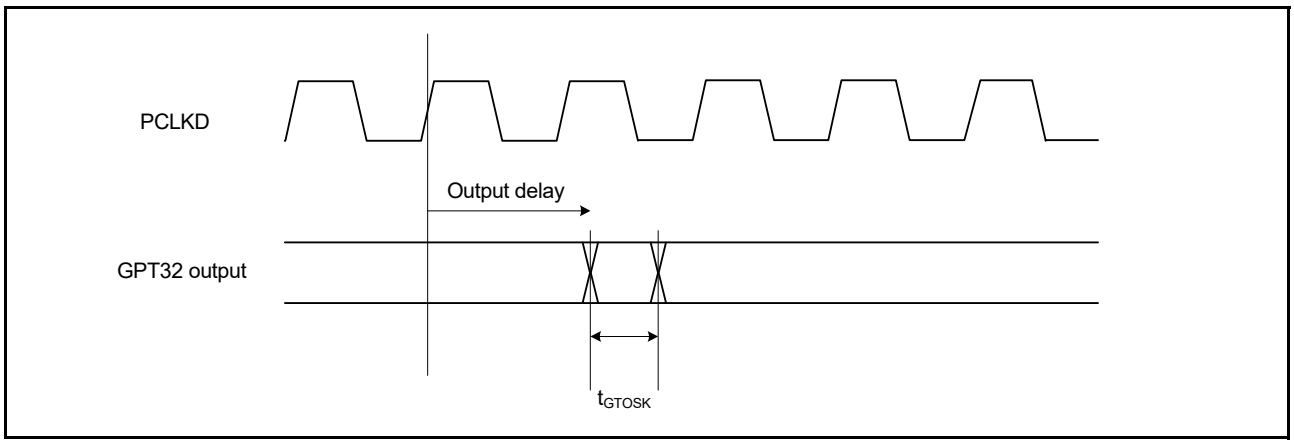

Figure 2.32 GPT32 output delay skew for OPS

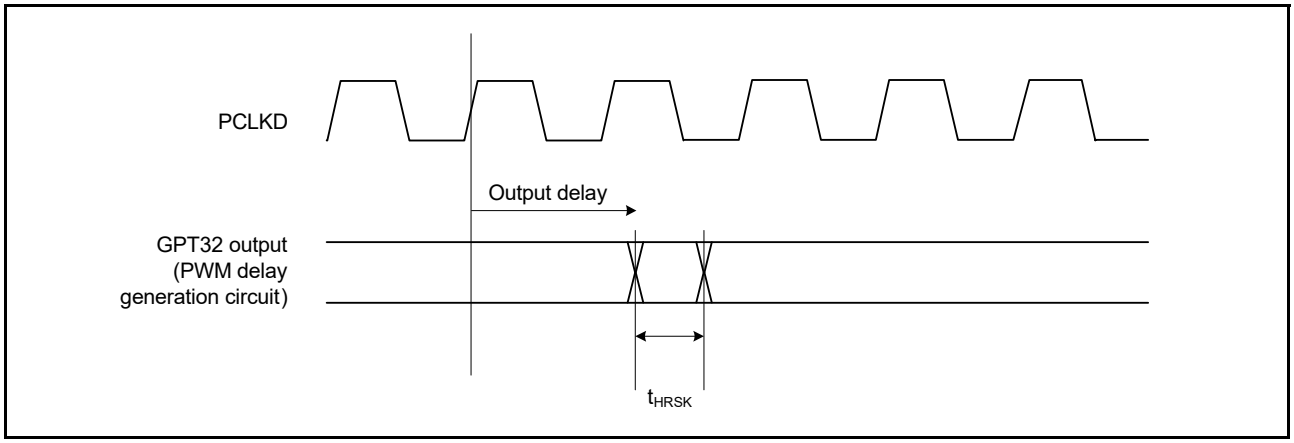

Figure 2.33 GPT32 (PWM Delay Generation Circuit) output delay skew

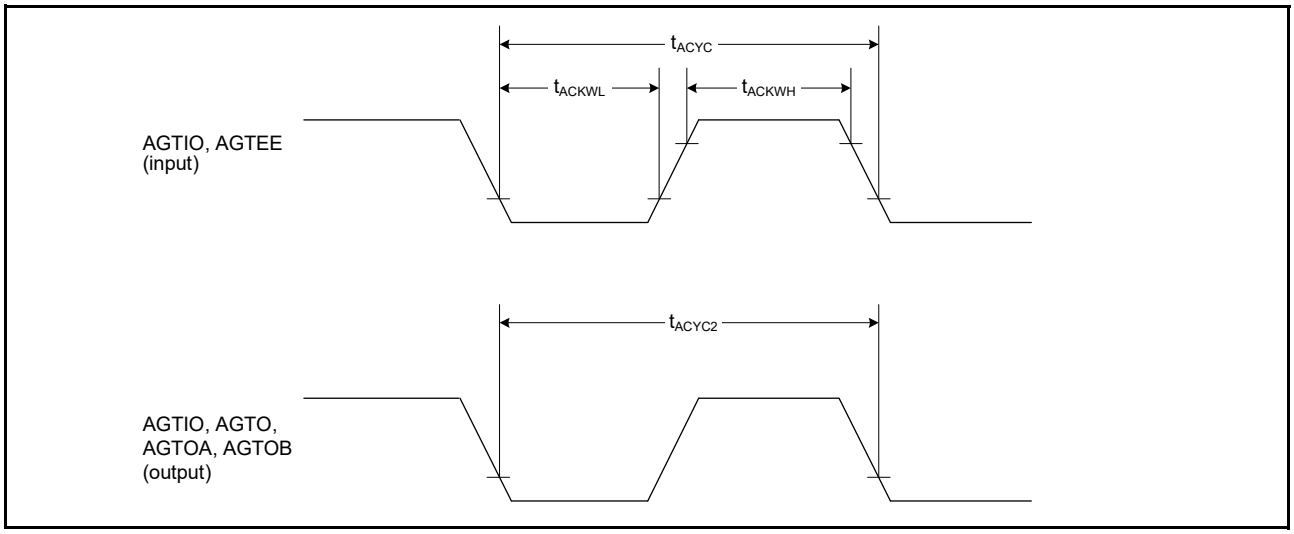

Figure 2.34 AGT input/output timing

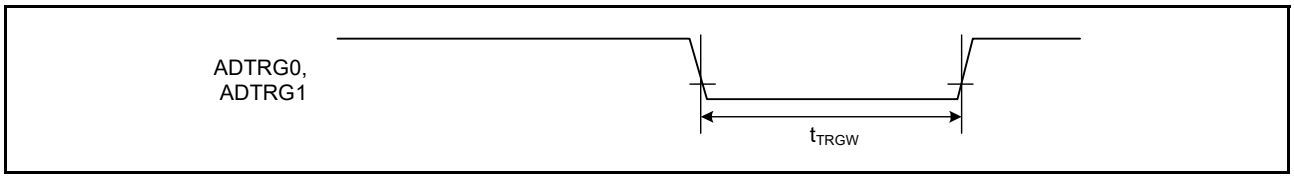

Figure 2.35 ADC12 trigger input timing

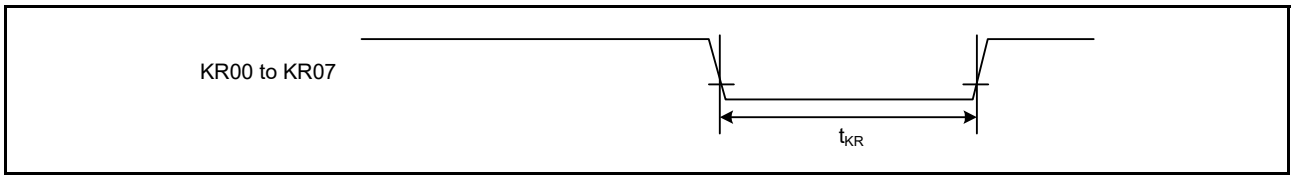

Figure 2.36 Key interrupt input timing

2.3.8 PWM Delay Generation Circuit Timing

Table 2.20 PWM Delay Generation Circuit timing

Item	Min	Typ	Max	Unit	Test conditions
Operation frequency	80	-	120	MHz	-
Resolution	-	260	-	ps	PCLKD = 120 MHz
DNL*1	-	±2.0	-	LSB	-

Note 1. This value normalizes the differences between lines in 1-LSB resolution.

2.3.9 CAC Timing

Table 2.21 CAC timing

Item			Symbol	Min	Typ	Max	Unit	Test conditions
CAC	CACREF input pulse width	$t_{PBcyc} \leq$ tcac*2	t_{CACREF}	$4.5 \times t_{cac} + 3 \times t_{PBcyc}$	-	-	ns	-
		$t_{PBcyc} >$ tcac*2		$5 \times t_{cac} + 6.5 \times t_{PBcyc}$	-	-	ns	

Note 1. t_{PBcyc}: PCLKB cycle.

Note 2. t_{cac}: CAC count clock source cycle.

2.3.10 SCI Timing

Table 2.22 SCI timing (1)

Conditions: High drive output is selected in the port drive capability bit in the PmnPFS register for the following pins: SCK0 to SCK9 (except for SCK4_B, SCK7_A).
For other pins, middle drive output is selected in the port drive capability bit in the PmnPFS register.

Item			Symbol	Min	Max	Unit*1	Test conditions
SCI	Input clock cycle	Asynchronous	t_{Scyc}	4	-	t_{Pcyc}	Figure 2.37
		Clock synchronous		6	-		
	Input clock pulse width		t_{SCKW}	0.4	0.6	t_{Scyc}	
	Input clock rise time		t_{SCKr}	-	5	ns	
	Input clock fall time		t_{SCKf}	-	5	ns	
	Output clock cycle	Asynchronous	t_{Scyc}	6	-	t_{Pcyc}	
		Clock synchronous		4	-		
	Output clock pulse width		t_{SCKW}	0.4	0.6	t_{Scyc}	
	Output clock rise time		t_{SCKr}	-	5	ns	
	Output clock fall time		t_{SCKf}	-	5	ns	
	Transmit data delay	Clock synchronous	t_{TXD}	-	25	ns	Figure 2.38
	Receive data setup time	Clock synchronous	t_{RXS}	15	-	ns	
	Receive data hold time	Clock synchronous	t_{RXH}	5	-	ns	

Note 1. t_{Pcyc}: PCLKA cycle.

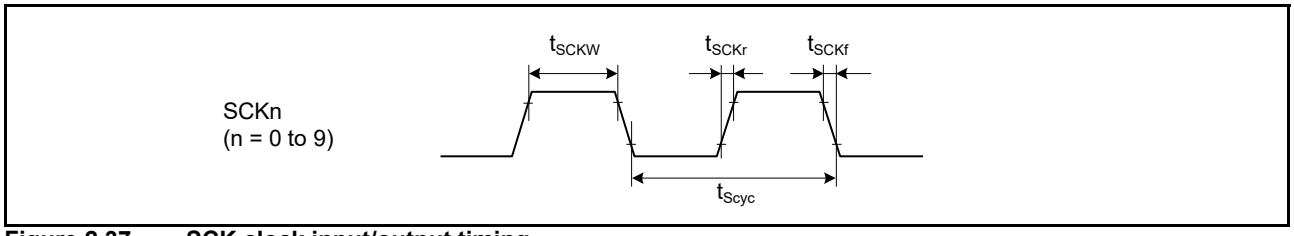

Figure 2.37 SCK clock input/output timing

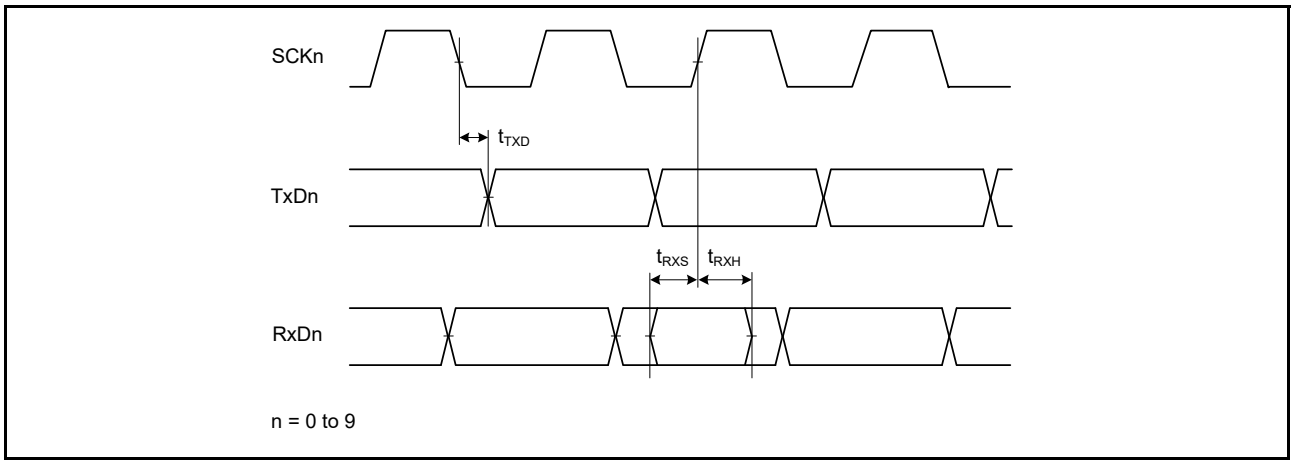

Figure 2.38 SCI input/output timing in clock synchronous mode

Table 2.23 SCI timing (2)

Conditions: High drive output is selected in the port drive capability bit in the PmnPFS register for the following pins: SCK0 to SCK9 (except for SCK4_B, SCK7_A).
For the SCK4_B and SCK7_A pins, middle drive output is selected in the port drive capability bit in the PmnPFS register.
For the MISO1_A pins, low drive output is selected in the port drive capability bit in the PmnPFS register.
For other pins, middle drive output is selected in the port drive capability bit in the PmnPFS register.

Item		Symbol	Min	Max	Unit	Test conditions
Simple SPI	SCK clock cycle output (master)	t_{SPcyc}	4 (PCLKA ≤ 60 MHz) 8 (PCLKA > 60 MHz)	65536	t_{Pcyc}	Figure 2.39
	SCK clock cycle input (slave)	-	6 (PCLKA ≤ 60 MHz) 12 (PCLKA > 60 MHz)	65536		
	SCK clock high pulse width	t_{SPCKWH}	0.4	0.6	t_{SPcyc}	
	SCK clock low pulse width	t_{SPCKWL}	0.4	0.6	t_{SPcyc}	
	SCK clock rise and fall time	t_{SPCKr}, t_{SPCKf}	-	20	ns	
	Data input setup time	t_{SU}	33.3	-	ns	Figure 2.40 to Figure 2.43
	Data input hold time	t_H	33.3	-	ns	
	SS input setup time	t_{LEAD}	1	-	t_{SPcyc}	
	SS input hold time	t_{LAG}	1	-	t_{SPcyc}	
	Data output delay	t_{OD}	-	33.3	ns	
	Data output hold time	t_{OH}	–10	-	ns	
	Data rise and fall time	t_{Dr}, t_{Df}	-	16.6	ns	
	SS input rise and fall time	t_{SSLr}, t_{SSLf}	-	16.6	ns	
	Slave access time	t_{SA}	-	4 (PCLKA ≤ 60 MHz) 8 (PCLKA > 60 MHz)	t_{Pcyc}	Figure 2.43
	Slave output release time	t_{REL}	-	5 (PCLKA ≤ 60 MHz) 10 (PCLKA > 60 MHz)	t_{Pcyc}	

Note: MISO1_A is not supported in these specifications.

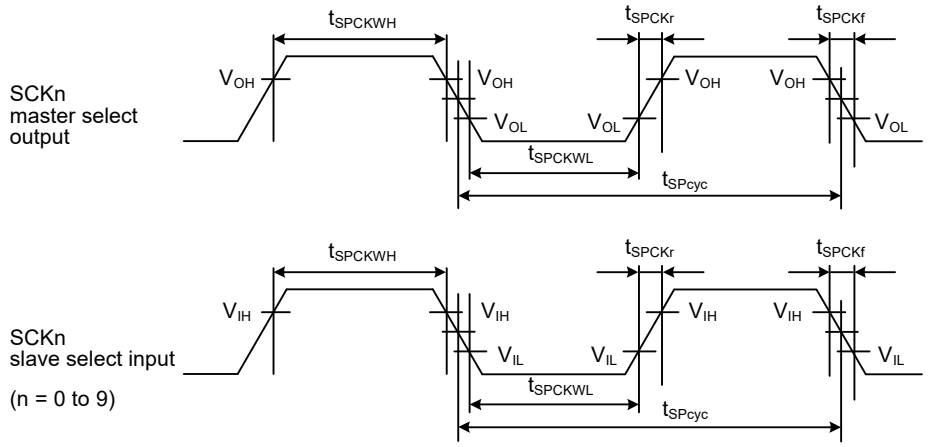

V_{OH} = 0.7 × VCC, V_{OL} = 0.3 × VCC, V_{IH} = 0.7 × VCC, V_{IL} = 0.3 × VCC

Figure 2.39 SCI simple SPI mode clock timing

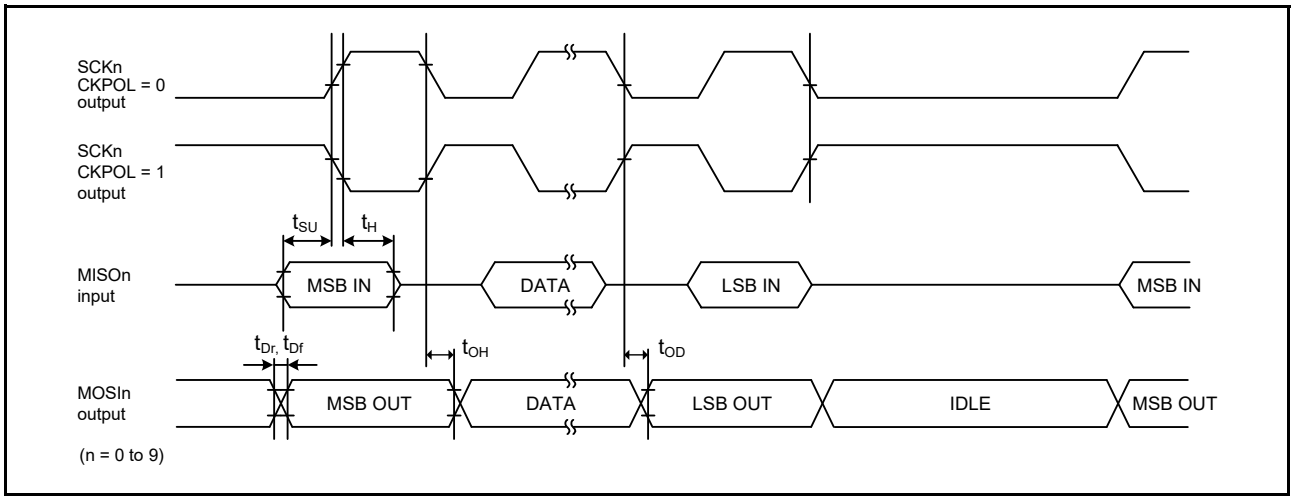

Figure 2.40 SCI simple SPI mode timing for master when CKPH = 1

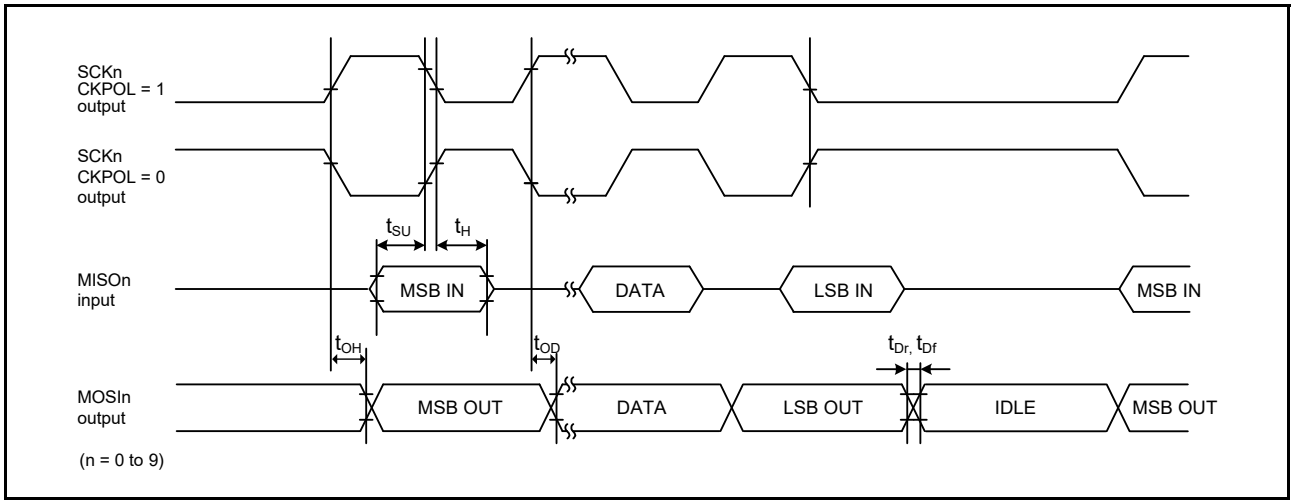

Figure 2.41 SCI simple SPI mode timing for master when CKPH = 0

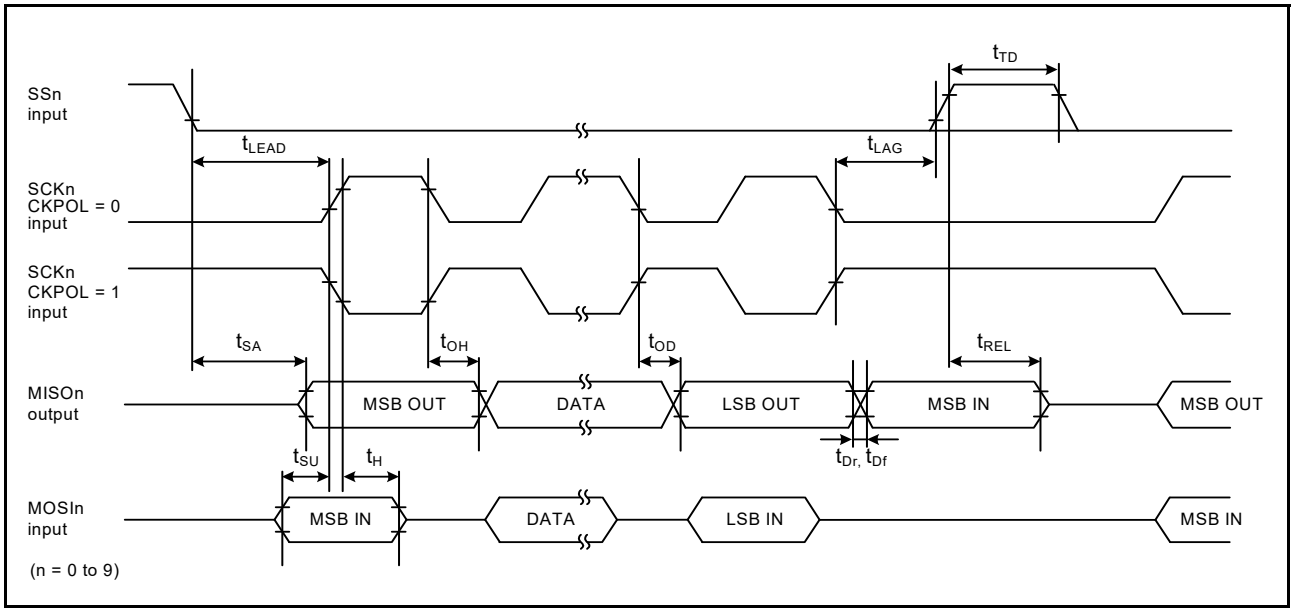

Figure 2.42 SCI simple SPI mode timing for slave when CKPH = 1

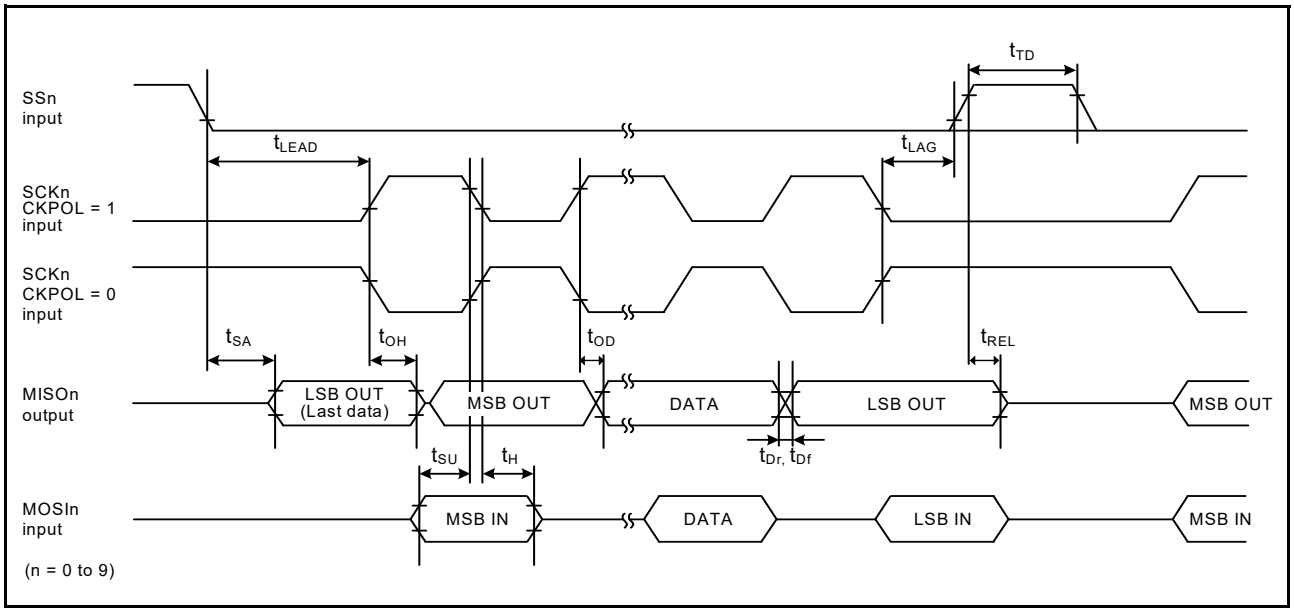

Figure 2.43 SCI simple SPI mode timing for slave when CKPH = 0

Table 2.24 SCI timing (3)

Conditions: For the SCL1_A pins, low drive output is selected in the port drive capability bit in the PmnPFS register.
For other pins, middle drive output is selected in the port drive capability bit in the PmnPFS register.

Item		Symbol	Min	Max	Unit	Test conditions
Simple IIC (Standard mode)	SDA input rise time	t_{Sr}	-	1000	ns	Figure 2.44
	SDA input fall time	t_{Sf}	-	300	ns	
	SDA input spike pulse removal time	t_{SP}	0	4 × t_{IICcyc}	ns	
	Data input setup time	t_{SDAS}	250	-	ns	
	Data input hold time	t_{SDAH}	0	-	ns	
	SCL, SDA capacitive load	C_b*1	-	400	pF	
Simple IIC (Fast mode)	SDA input rise time	t_{Sr}	-	300	ns	Figure 2.44
	SDA input fall time	t_{Sf}	-	300	ns	
	SDA input spike pulse removal time	t_{SP}	0	4 × t_{IICcyc}	ns	
	Data input setup time	t_{SDAS}	100	-	ns	
	Data input hold time	t_{SDAH}	0	-	ns	
	SCL, SDA capacitive load	C_b*1	-	400	pF	

Note: SCL1_A output is not supported in these specifications.
t_{IICcyc}: IIC internal reference clock (IICφ) cycle.

Note 1. Cb indicates the total capacity of the bus line.

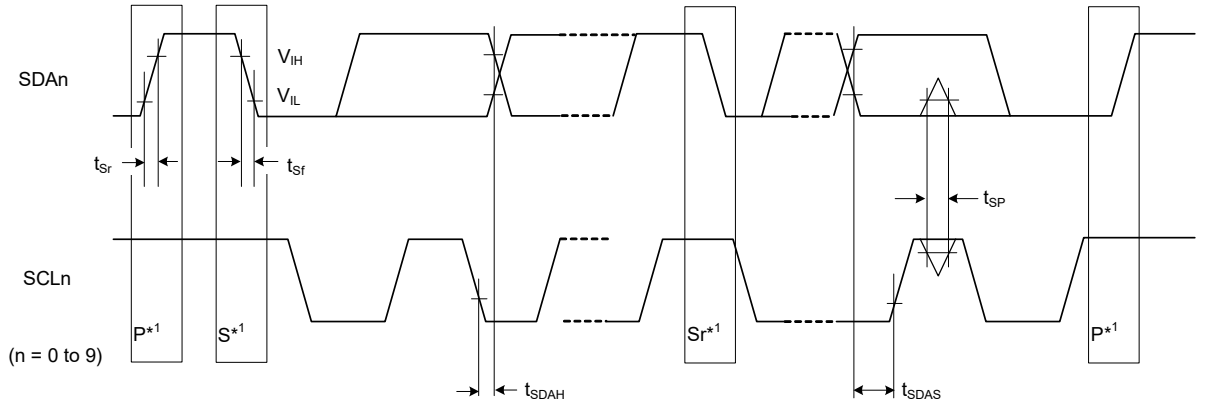

Note 1. S, P, and Sr indicate the following:
S: Start condition
P: Stop condition
Sr: Restart condition

Test conditions:
V_{IH} = VCC × 0.7, V_{IL} = VCC × 0.3
V_{OL} = 0.6 V, I_{OL} = 6 mA

Figure 2.44 SCI simple IIC mode timing

2.3.11 SPI Timing

Table 2.25 SPI timing

Conditions:
(1) Middle drive output is selected with the port drive capability bit in the PmnPFS register.
(2) Use pins that have a letter appended to their names, for instance "_A" or "_B", to indicate group membership. For the SPI interface, the AC portion of the electrical characteristics is measured for each group.

Item			Symbol	Min	Max	Unit*1	Test conditions
SPI	RSPCK clock cycle	Master	t_{SPcyc}	2 (PCLKA ≤ 60 MHz) 4 (PCLKA > 60 MHz)	4096	t_{Pcyc}	Figure 2.45 C = 30 pF
		Slave		6	4096		
	RSPCK clock high pulse width	Master	t_{SPCKWH}	$(t_{SPcyc} - t_{SPCKr} - t_{SPCKf}) / 2 - 3$	-	ns	
		Slave		$3 \times t_{Pcyc}$	-		
	RSPCK clock low pulse width	Master	t_{SPCKWL}	$(t_{SPcyc} - t_{SPCKr} - t_{SPCKf}) / 2 - 3$	-	ns	
		Slave		$3 \times t_{Pcyc}$	-		
	RSPCK clock rise and fall time	Master	t_{SPCKr}, t_{SPCKf}	-	5	ns	
		Slave		-	1	μs	
	Data input setup time	Master	t_{SU}	4	-	ns	Figure 2.46 to Figure 2.51 C = 30 pF
		Slave		5	-		
	Data input hold time	Master	t_{HF}*4	0	-	ns	-
		Master	t_H	t_{Pcyc}	-		
		Slave	t_H	20	-		-
	SSL setup time	Master	t_{LEAD}	$N \times t_{SPcyc}$ - 10*2	$N \times t_{SPcyc}$ + 100 *2	ns	-
		Slave		$6 \times t_{Pcyc}$	-	ns	-
	SSL hold time	Master	t_{LAG}	$N \times t_{SPcyc}$ - 10 *3	$N \times t_{SPcyc}$ + 100 *3	ns	-
		Slave		$6 \times t_{Pcyc}$	-	ns	-
	Data output delay	Master	t_{OD}	-	6.3	ns	Figure 2.46 to Figure 2.51 C = 30pF
		Slave		-	20		
	Data output hold time	Master	t_{OH}	0	-	ns	
		Slave		0	-		
	Successive transmission delay	Master	t_{TD}	$t_{SPcyc} + 2 \times t_{Pcyc}$	$8 \times t_{SPcyc} + 2 \times t_{Pcyc}$	ns	
		Slave		$6 \times t_{Pcyc}$			
	MOSI and MISO rise and fall time	Output	t_{Dr}, t_{Df}	-	5	ns	
		Input		-	1	μs	
	SSL rise and fall time	Output	t_{SSLr}, t_{SSLf}	-	5	ns	
		Input		-	1	μs	
	Slave access time		t_{SA}	-	$2 \times t_{Pcyc} + 28$	ns	Figure 2.50 and Figure 2.51 C = 30pF
	Slave output release time		t_{REL}	-	$2 \times t_{Pcyc} + 28$		

Note 1. t_{Pcyc}: PCLKA cycle.
Note 2. N is set to an integer from 1 to 8 by the SPCKD register.
Note 3. N is set to an integer from 1 to 8 by the SSLND register.
Note 4. PCLKA division ratio set to 1/2.

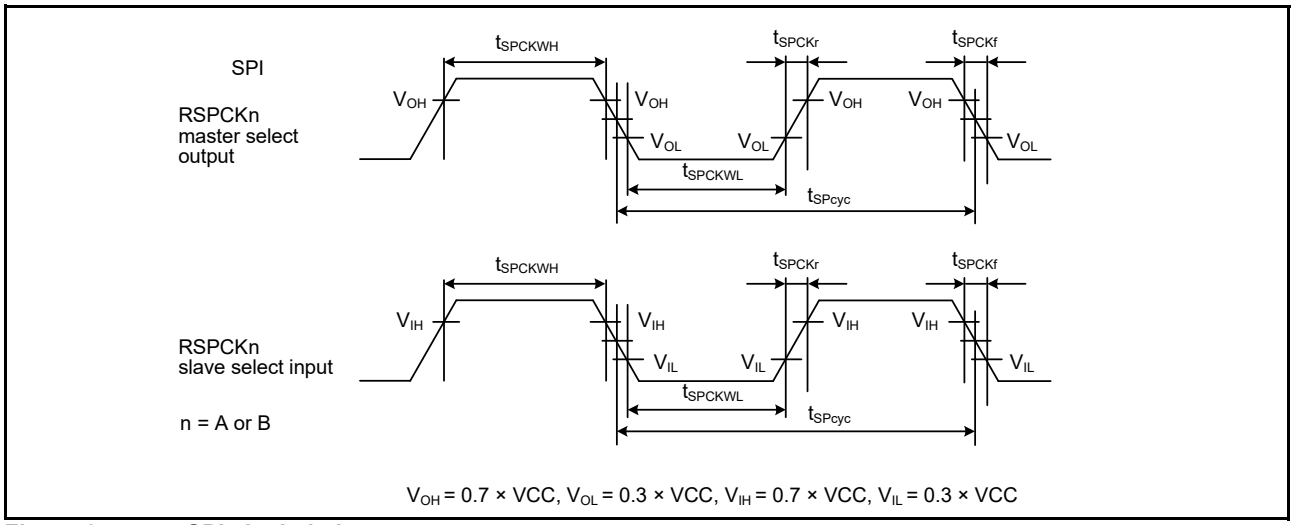

Figure 2.45 SPI clock timing

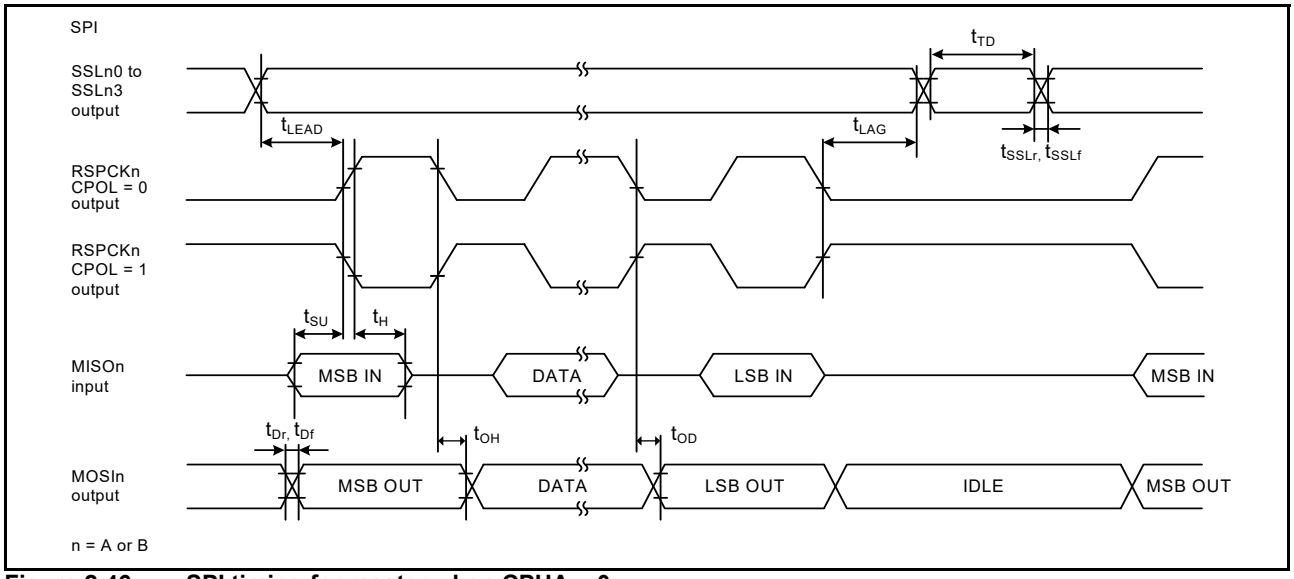

Figure 2.46 SPI timing for master when CPHA = 0

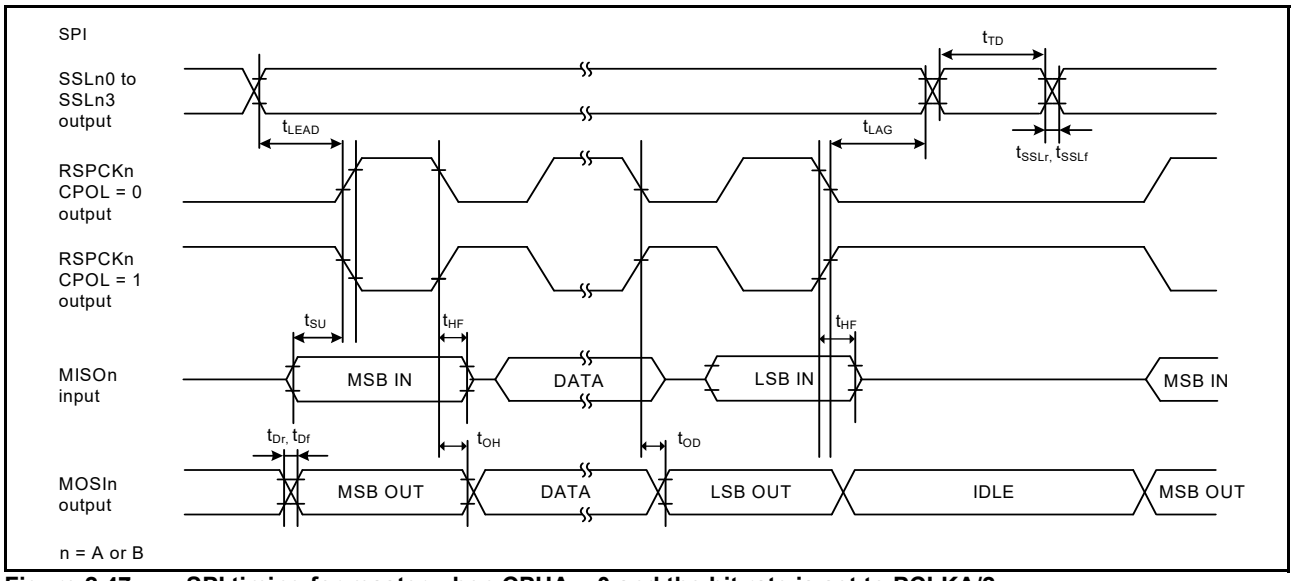

Figure 2.47 SPI timing for master when CPHA = 0 and the bit rate is set to PCLKA/2

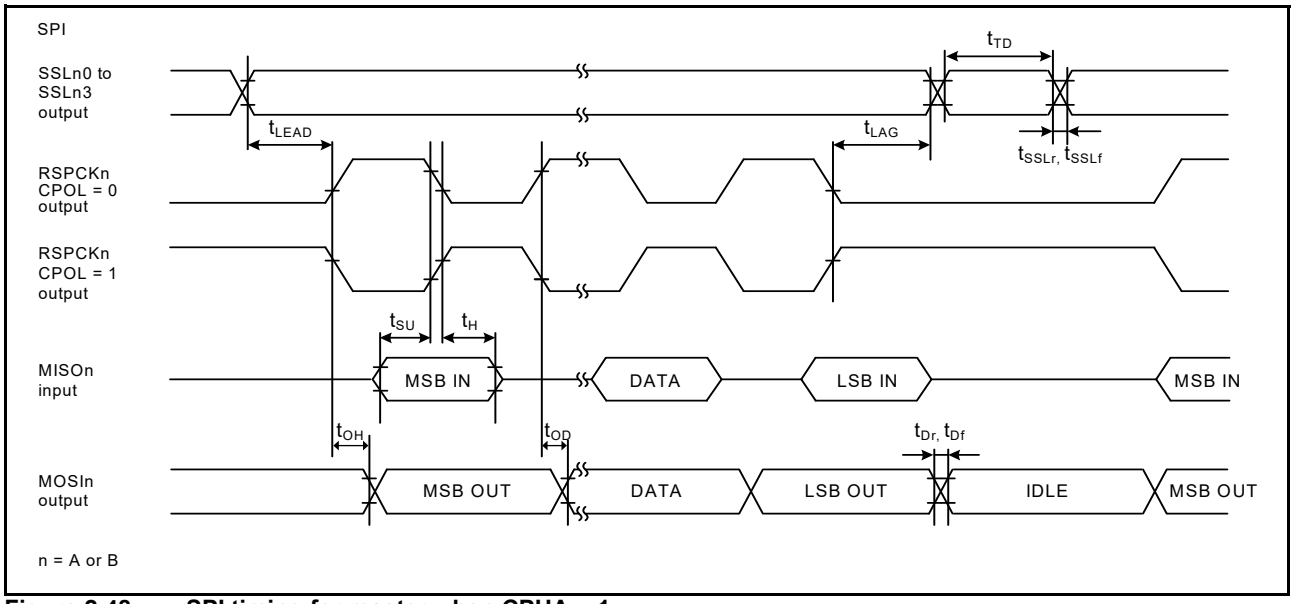

Figure 2.48 SPI timing for master when CPHA = 1

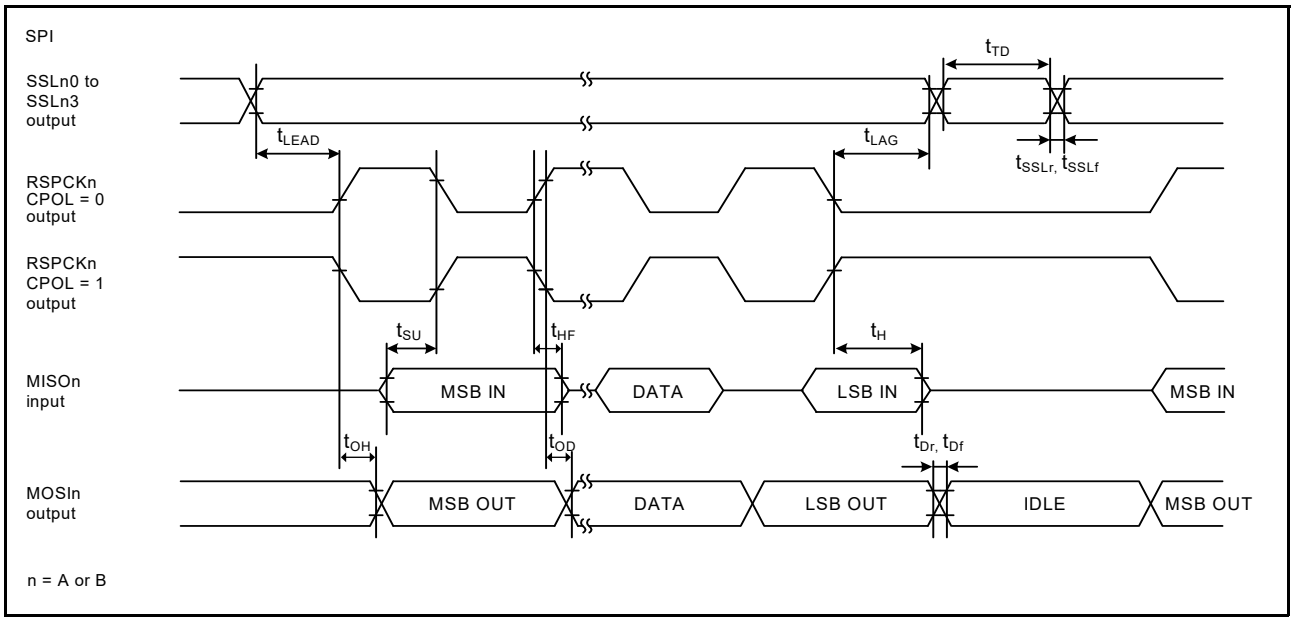

Figure 2.49 SPI timing for master when CPHA = 1 and the bit rate is set to PCLKA/2

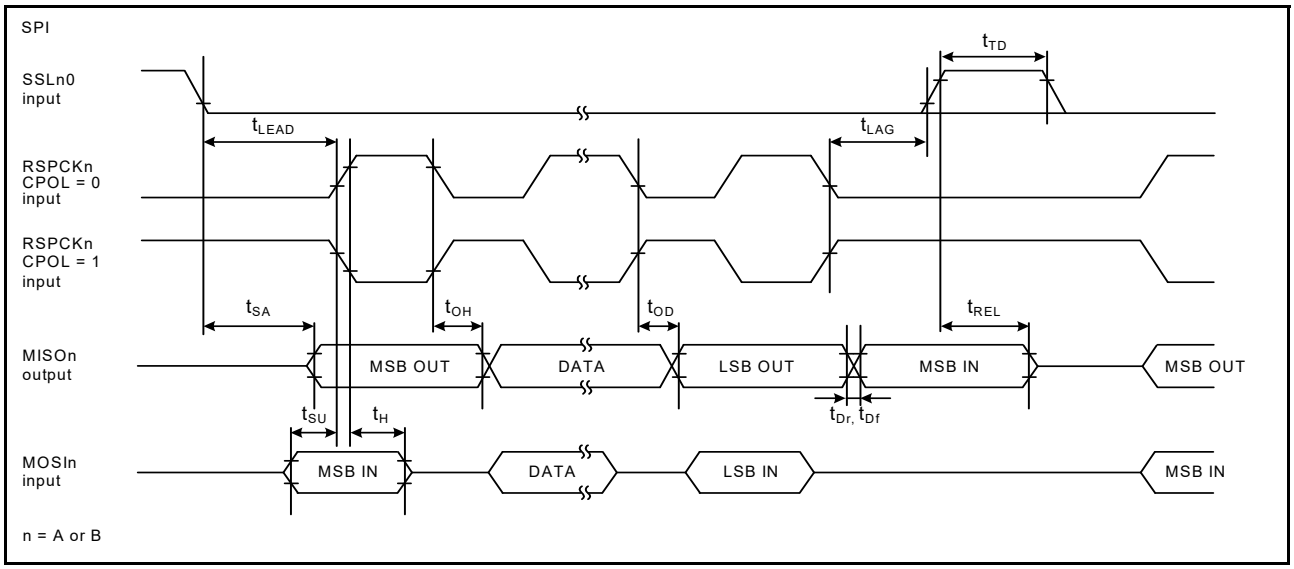

Figure 2.50 SPI timing for slave when CPHA = 0

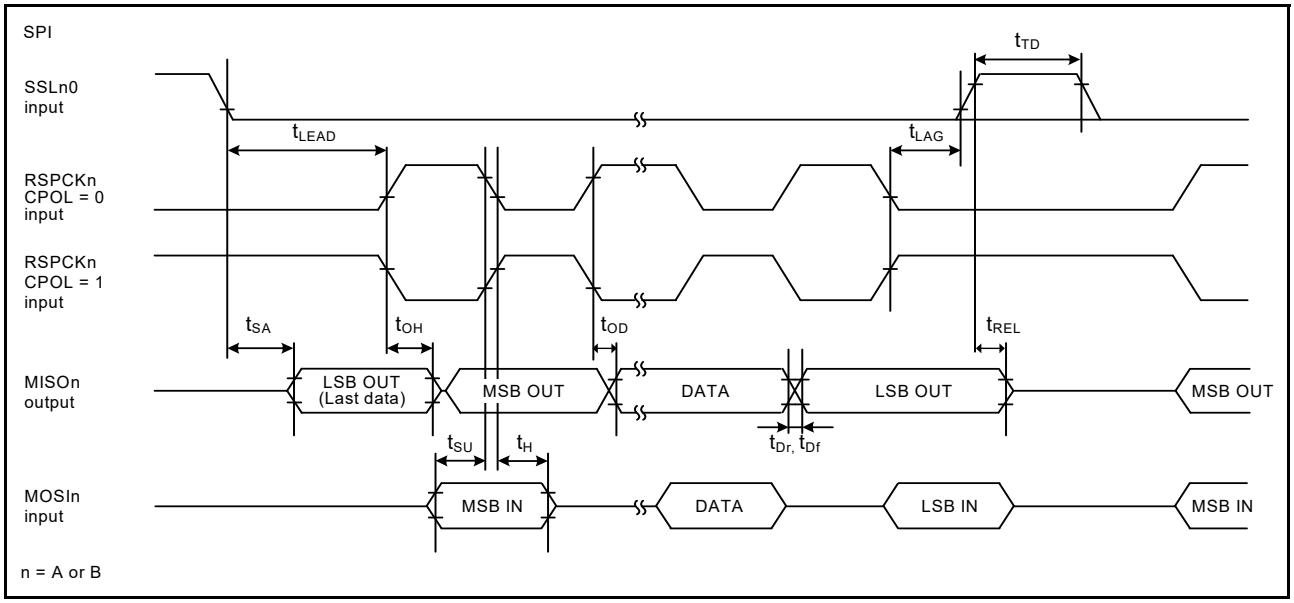

Figure 2.51 SPI timing for slave when CPHA = 1

2.3.12 QSPI Timing

Table 2.26 QSPI timing
Conditions: High drive output is selected in the port drive capability bit in the PmnPFS register.

Item		Symbol	Min	Max	Unit*1	Test conditions
QSPI	QSPCK clock cycle	t_{QScyc}	2	48	t_{Pcyc}	Figure 2.52
	QSPCK clock high pulse width	t_{QSWH}	t_{QScyc} × 0.4	-	ns	
	QSPCK clock low pulse width	t_{QSWL}	t_{QScyc} × 0.4	-	ns	
	Data input setup time	t_{Su}	11	-	ns	Figure 2.53
	Data input hold time	t_{IH}	0	-	ns	
	QSSL setup time	t_{LEAD}	(N+0.5) x t_{Qscyc} - 5 *2	(N+0.5) x t_{Qscyc} +100 *2	ns	
	QSSL hold time	t_{LAG}	(N+0.5) x t_{Qscyc} - 5 *3	(N+0.5) x t_{Qscyc} +100 *3	ns	
	Data output delay	t_{OD}	-	4	ns	
	Data output hold time	t_{OH}	–3.3	-	ns	
	Successive transmission delay	t_{TD}	1	16	t_{QScyc}	

Note 1. t_{Pcyc}: PCLKA cycle.
Note 2. N is set to 0 or 1 in SFMSLD.
Note 3. N is set to 0 or 1 in SFMSHD.

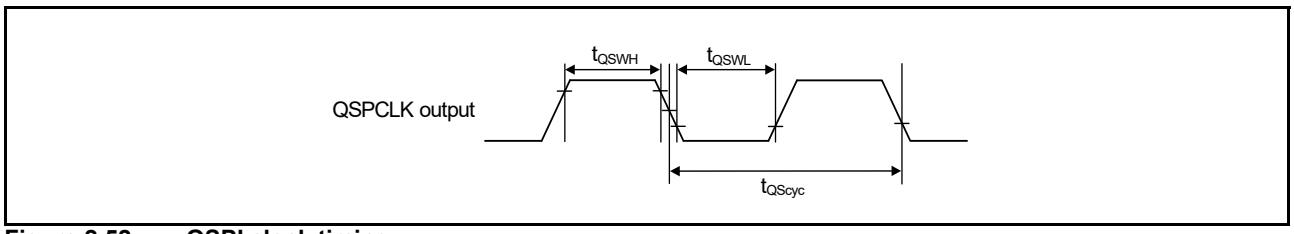

Figure 2.52 QSPI clock timing

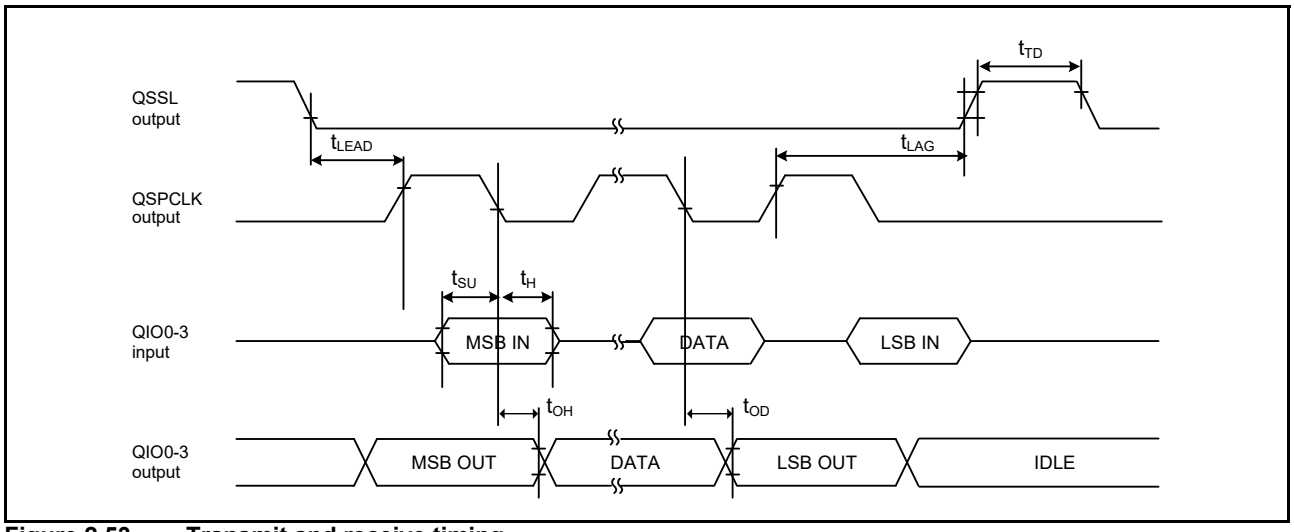

Figure 2.53 Transmit and receive timing

2.3.13 IIC Timing

Table 2.27 IIC timing (1) (1 of 2)

Conditions:
(1) Middle drive output is selected in the port drive capability bit in the PmnPFS register for the following pins: SDA0_B, SCL0_B, SDA1_A, SCL1_A, SDA1_B, SCL1_B. The following pins do not require setting: SCL0_A, SDA0_A, SCL2, SDA2.
(2) Use pins that have a letter appended to their names, for example "_A" or "_B", to indicate group membership. For the IIC interface, the AC portion of the electrical characteristics is measured for each group.

Item		Symbol	Min*1	Max	Unit	Test conditions
IIC (Standard mode, SMBus) ICFER.FMPE = 0	SCL input cycle time	t_{SCL}	6 (12) × t_{IICcyc} + 1300	-	ns	Figure 2.54
	SCL input high pulse width	t_{SCLH}	3 (6) × t_{IICcyc} + 300	-	ns	
	SCL input low pulse width	t_{SCLL}	3 (6) × t_{IICcyc} + 300	-	ns	
	SCL, SDA input rise time	t_{Sr}	-	1000	ns	
	SCL, SDA input fall time	t_{Sf}	-	300	ns	
	SCL, SDA input spike pulse removal time	t_{SP}	0	1 (4) × t_{IICcyc}	ns	
	SDA input bus free time when wakeup function is disabled	t_{BUF}	3 (6) × t_{IICcyc} + 300	-	ns	
	SDA input bus free time when wakeup function is enabled	t_{BUF}	3 (6) × t_{IICcyc} + 4 × t_{Pcyc} + 300	-	ns	
	START condition input hold time when wakeup function is disabled	t_{STAH}	t_{IICcyc} + 300	-	ns	
	START condition input hold time when wakeup function is enabled	t_{STAH}	1 (5) × t_{IICcyc} + t_{Pcyc} + 300	-	ns	
	Repeated START condition input setup time	t_{STAS}	1000	-	ns	
	STOP condition input setup time	t_{STOS}	1000	-	ns	
	Data input setup time	t_{SDAS}	t_{IICcyc} + 50	-	ns	
	Data input hold time	t_{SDAH}	0	-	ns	
	SCL, SDA capacitive load	C_b	-	400	pF	

Table 2.27 IIC timing (1) (2 of 2)

Conditions:
(1) Middle drive output is selected in the port drive capability bit in the PmnPFS register for the following pins: SDA0_B, SCL0_B, SDA1_A, SCL1_A, SDA1_B, SCL1_B. The following pins do not require setting: SCL0_A, SDA0_A, SCL2, SDA2.
(2) Use pins that have a letter appended to their names, for example "_A" or "_B", to indicate group membership. For the IIC interface, the AC portion of the electrical characteristics is measured for each group.

Item		Symbol	Min*1	Max	Unit	Test conditions
IIC (Fast mode)	SCL input cycle time	t_{SCL}	6 (12) × t_{IICcyc} + 600	-	ns	Figure 2.54
	SCL input high pulse width	t_{SCLH}	3 (6) × t_{IICcyc} + 300	-	ns	
	SCL input low pulse width	t_{SCLL}	3 (6) × t_{IICcyc} + 300	-	ns	
	SCL, SDA input rise time	t_{Sr}	20 × (external pullup voltage/5.5V)*2	300	ns	
	SCL, SDA input fall time	t_{Sf}	20 × (external pullup voltage/5.5V)*2	300	ns	
	SCL, SDA input spike pulse removal time	t_{SP}	0	1 (4) × t_{IICcyc}	ns	
	SDA input bus free time when wakeup function is disabled	t_{BUF}	3 (6) × t_{IICcyc} + 300	-	ns	
	SDA input bus free time when wakeup function is enabled	t_{BUF}	3 (6) × t_{IICcyc} + 4 × t_{Pcyc} + 300	-	ns	
	START condition input hold time when wakeup function is disabled	t_{STAH}	t_{IICcyc} + 300	-	ns	
	START condition input hold time when wakeup function is enabled	t_{STAH}	1(5) × t_{IICcyc} + t_{Pcyc} + 300	-	ns	
	Repeated START condition input setup time	t_{STAS}	300	-	ns	
	STOP condition input setup time	t_{STOS}	300	-	ns	
	Data input setup time	t_{SDAS}	t_{IICcyc} + 50	-	ns	
	Data input hold time	t_{SDAH}	0	-	ns	
	SCL, SDA capacitive load	C_b	-	400	pF	

Note: t_{IICcyc}: IIC internal reference clock (IICφ) cycle, t_{Pcyc}: PCLKB cycle.

Note 1. Values in parentheses apply when ICMR3.NF[1:0] is set to 11b while the digital filter is enabled with ICFER.NFE set to 1.

Note 2. Only supported for SCL0_A, SDA0_A, SCL2, and SDA2.

Table 2.28 IIC timing (2)

Conditions:

(1) Setting of the SCL0_A, SDA0_A pins is not required with the port drive capability bit in the PmnPFS register.

Item		Symbol	Min*1,*2	Max	Unit	Test conditions
IIC (Fast-mode+) ICFER.FMPE = 1	SCL input cycle time	t_{SCL}	6 (12) × t_{IICcyc} + 240	-	ns	Figure 2.54
	SCL input high pulse width	t_{SCLH}	3 (6) × t_{IICcyc} + 120	-	ns	
	SCL input low pulse width	t_{SCLL}	3 (6) × t_{IICcyc} + 120	-	ns	
	SCL, SDA input rise time	t_{Sr}	-	120	ns	
	SCL, SDA input fall time	t_{Sf}	-	120	ns	
	SCL, SDA input spike pulse removal time	t_{SP}	0	1 (4) × t_{IICcyc}	ns	
	SDA input bus free time when wakeup function is disabled	t_{BUF}	3 (6) × t_{IICcyc} + 120	-	ns	
	SDA input bus free time when wakeup function is enabled	t_{BUF}	3(6) × t_{IICcyc} + 4 × t_{Pcyc} + 120	-	ns	
	Start condition input hold time when wakeup function is disabled	t_{STAH}	t_{IICcyc} + 120	-	ns	
	START condition input hold time when wakeup function is enabled	t_{STAH}	1(5) × t_{IICcyc} + t_{Pcyc} + 120	-	ns	
	Restart condition input setup time	t_{STAS}	120	-	ns	
	Stop condition input setup time	t_{STOS}	120	-	ns	
	Data input setup time	t_{SDAS}	t_{IICcyc} + 30	-	ns	
	Data input hold time	t_{SDAH}	0	-	ns	
	SCL, SDA capacitive load	C_b	-	550	pF	

Note: t_{IICcyc}: IIC internal reference clock (IICφ) cycle, t_{Pcyc}: PCLKB cycle.

Note 1. Values in parentheses apply when ICMR3.NF[1:0] is set to 11b while the digital filter is enabled with ICFER.NFE set to 1.

Note 2. Cb indicates the total capacity of the bus line.

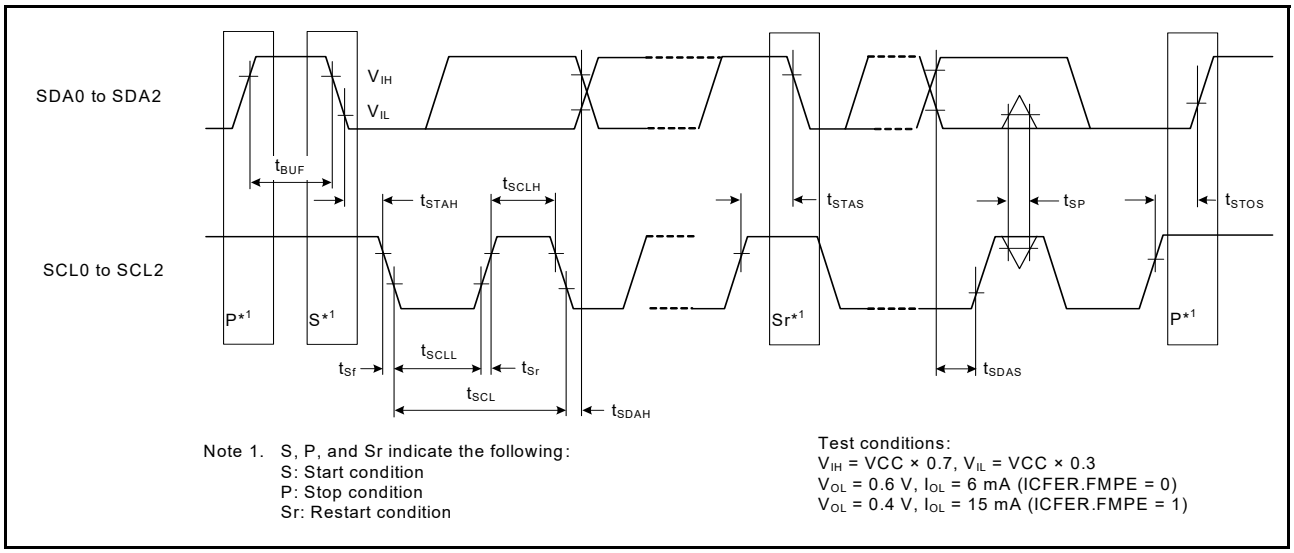

Figure 2.54 I²C bus interface input/output timing

2.3.14 SSI Timing

Table 2.29 SSI timing

Conditions:
(1) Middle drive output is selected with the port drive capability bit in the PmnPFS register.
(2) Use pins that have a letter appended to their names, for instance "_A" or "_B", to indicate group membership. For the SSI interface, the AC portion of the electrical characteristics is measured for each group.

Item		Symbol	Min	Max	Unit	Test conditions
SSI	AUDIO_CLK input frequency	t_{AUDIO}	-	50	MHz	-
	Output clock period	t_O	150	64000	ns	Figure 2.55
	Input clock period	t_I	150	64000	ns	
	Clock high pulse width	t_{HC}	60	-	ns	
	Clock low pulse width	t_{LC}	60	-	ns	
	Clock rise time	t_{RC}	-	25	ns	
	Data delay	t_{DTR}	–5	25	ns	Figure 2.56, Figure 2.57
	Set-up time	t_{SR}	25	-	ns	
	Hold time	t_{HTR}	25	-	ns	
	SSIDATA output delay from WS change time	T_{DTRW}	-	25	ns	Figure 2.58

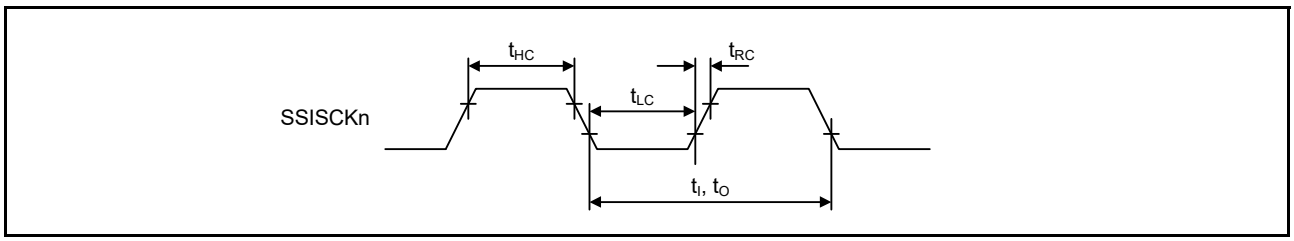

Figure 2.55 SSI clock input/output timing

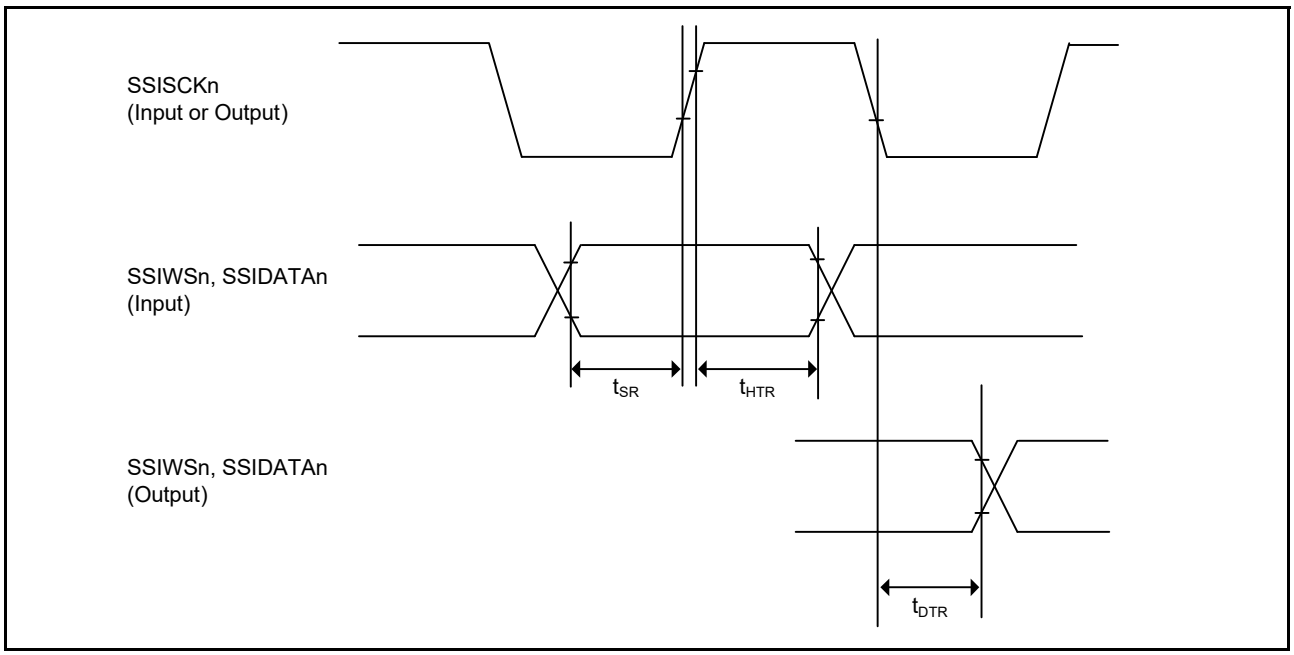

Figure 2.56 SSI data transmit and receive timing when SSICR.SCKP = 0

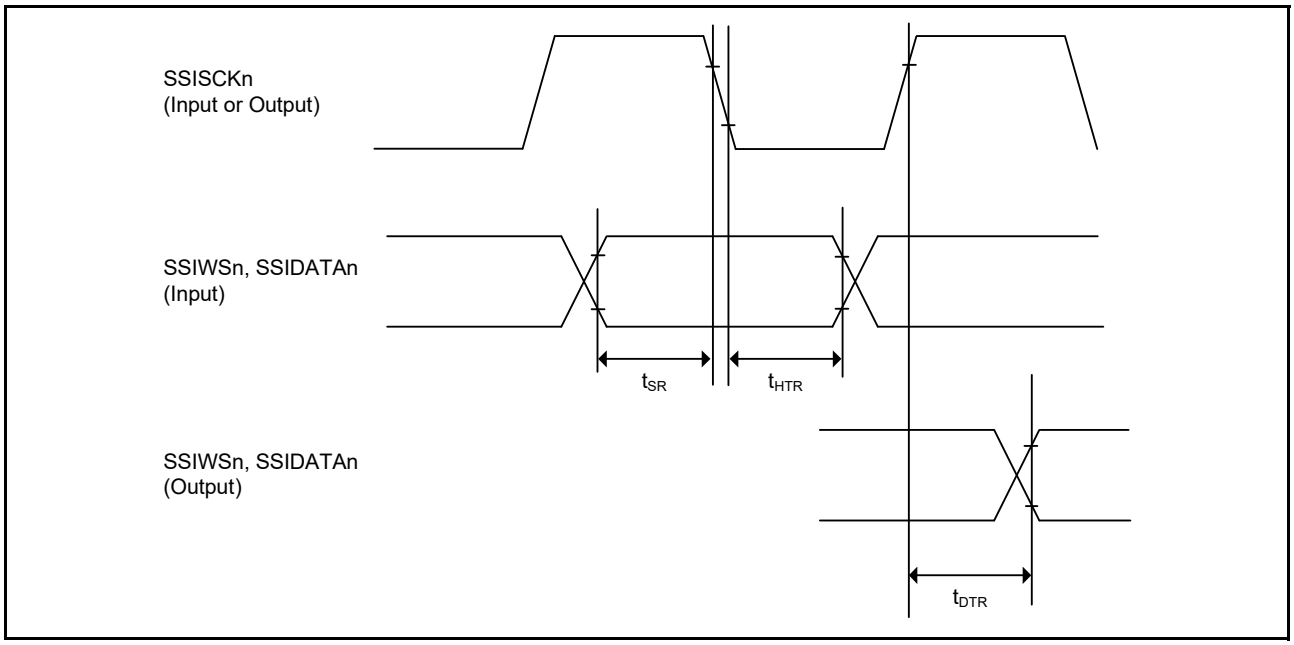

Figure 2.57 SSI data transmit and receive timing when SSICR.SCKP = 1

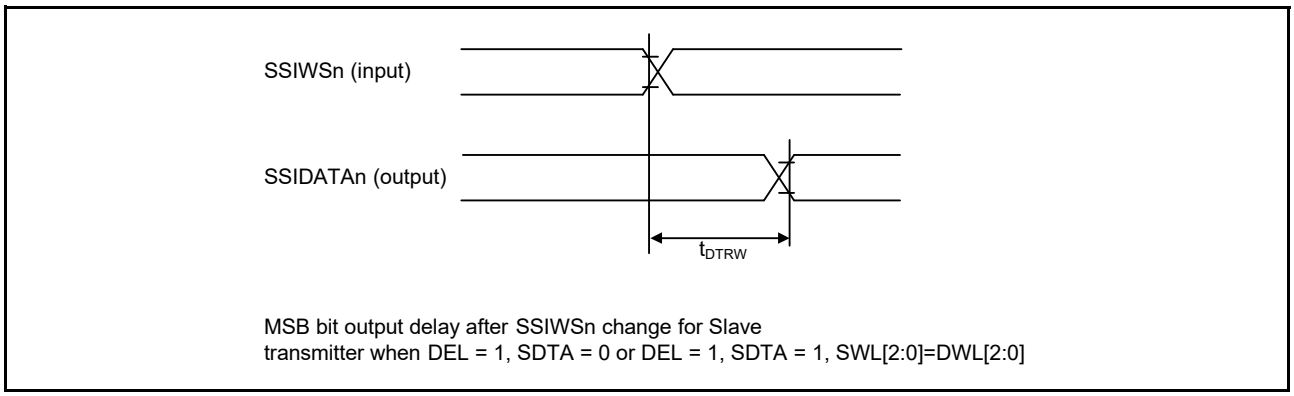

Figure 2.58 SSI data output delay after SSIWSn change

2.3.15 SD/MMC Host Interface Timing

Table 2.30 SD/MMC Host Interface signal timing
Conditions: High drive output is selected in the port drive capability bit in the PmnPFS register.
Clock duty ratio is 50%.

Item	Symbol	Min	Max	Unit	Test conditions
SDCLK clock cycle	T_{SDCYC}	20	-	ns	Figure 2.59
SDCLK clock high pulse width	T_{SDWH}	6.5	-	ns	
SDCLK clock low pulse width	T_{SDWL}	6.5	-	ns	
SDCLK clock rise time	T_{SDLH}	-	3	ns	
SDCLK clock fall time	T_{SDHL}	-	3	ns	
SDCMD/SDDAT output data delay	T_{SDODLY}	–6	5	ns	
SDCMD/SDDAT input data setup	T_{SDIS}	4	-	ns	
SDCMD/SDDAT input data hold	T_{SDIH}	2	-	ns	

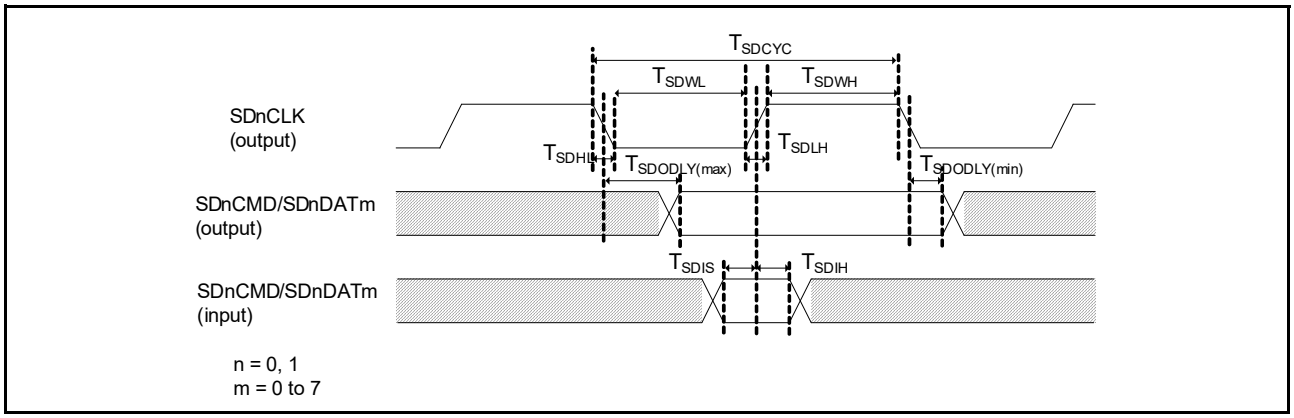

Figure 2.59 SD/MMC Host Interface signal timing

2.3.16 ETHERC Timing

Table 2.31 ETHERC timing

Conditions: ETHERC (RMII): Middle drive output is selected in the port drive capability bit in the PmnPFS register for the following pins: ET0_MDC, ET0_MDIO, ET1_MDC, and ET1_MDIO
For other pins, high drive output is selected in the port drive capability bit in the PmnPFS register.
ETHERC (MII): Middle drive output is selected in the port drive capability bit in the PmnPFS register
n = 0, 1.

Item		Symbol	Min	Max	Unit	Test conditions
ETHERC (RMII)	REF50CKn cycle time	T_{ck}	20	-	ns	Figure 2.60 to Figure 2.63
	REF50CKn frequency, typical 50 MHz	-	-	50 + 100 ppm	MHz	
	REF50CKn duty	-	35	65	%	
	REF50CKn rise/fall time	$T_{ckr/ckf}$	0.5	3.5	ns	
	RMIIn_xxxx*1 output delay	T_{co}	2.5	12.0	ns	
	RMIIn_xxxx*2 setup time	T_{su}	3	-	ns	
	RMIIn_xxxx*2 hold time	T_{hd}	1	-	ns	
	RMIIn_xxxx*1, *2 rise/fall time	T_r/T_f	0.4	4	ns	
	ETn_WOL output delay	t_{WOLd}	1	23.5	ns	Figure 2.64
ETHERC (MII)	ETn_TX_CLK cycle time	t_{Tcyc}	40	-	ns	-
	ETn_TX_EN output delay	t_{TENd}	1	20	ns	Figure 2.65
	ETn_ETXD0 to ET_ETXD3 output delay	t_{MTDd}	1	20	ns	
	ETn_CRS setup time	t_{CRSs}	10	-	ns	
	ETn_CRS hold time	t_{CRSh}	10	-	ns	
	ETn_COL setup time	t_{COLs}	10	-	ns	Figure 2.66
	ETn_COL hold time	t_{COLh}	10	-	ns	
	ETn_RX_CLK cycle time	t_{TRcyc}	40	-	ns	-
	ETn_RX_DV setup time	t_{RDVs}	10	-	ns	Figure 2.67
	ETn_RX_DV hold time	t_{RDVh}	10	-	ns	
	ETn_ERXD0 to ET_ERXD3 setup time	t_{MRDs}	10	-	ns	
	ETn_ERXD0 to ET_ERXD3 hold time	t_{MRDh}	10	-	ns	
	ETn_RX_ER setup time	t_{RERs}	10	-	ns	Figure 2.68
	ETn_RX_ER hold time	t_{RESh}	10	-	ns	
	ETn_WOL output delay	t_{WOLd}	1	23.5	ns	Figure 2.69

Note 1. RMIIn_TXD_EN, RMIIn_TXD1, RMIIn_TXD0.
Note 2. RMIIn_CRS_DV, RMIIn_RXD1, RMIIn_RXD0, RMIIn_RX_ER.

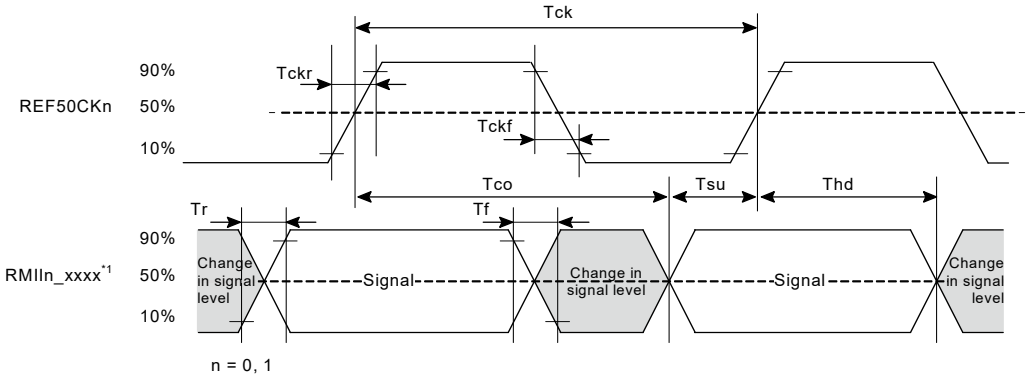

Note 1. RMIIn_TXD_EN, RMIIn_TXD1, RMIIn_TXD0, RMIIn_CRS_DV, RMIIn_RXD1, RMIIn_RXD0, RMIIn_RX_ER

Figure 2.60 REF50CKn and RMII signal timing (n = 0 and 1)

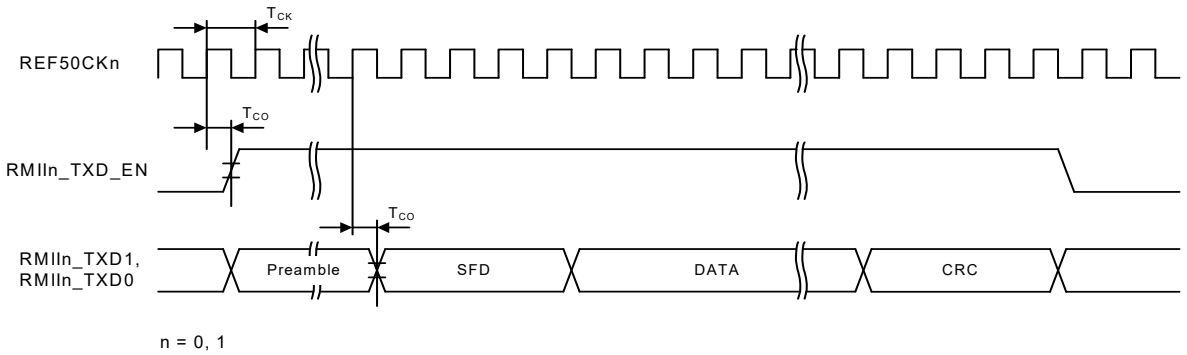

Figure 2.61 RMII transmission timing

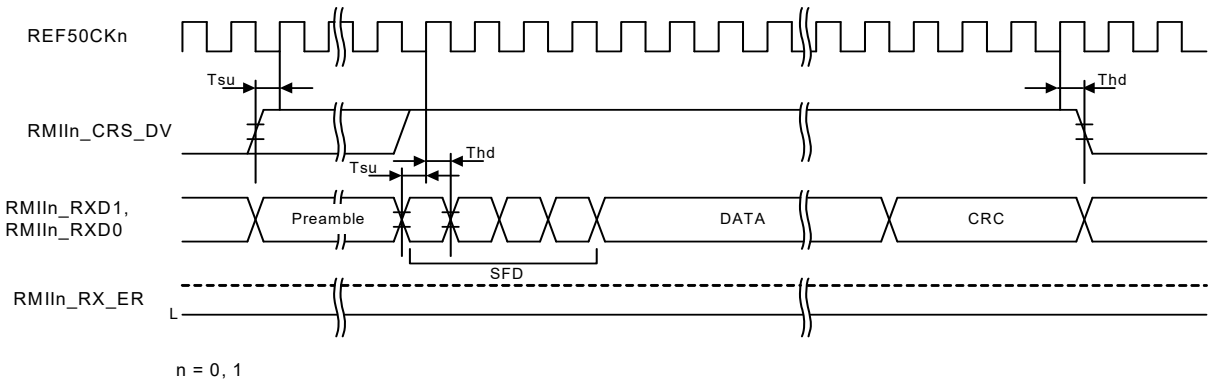

Figure 2.62 RMII reception timing in normal operation

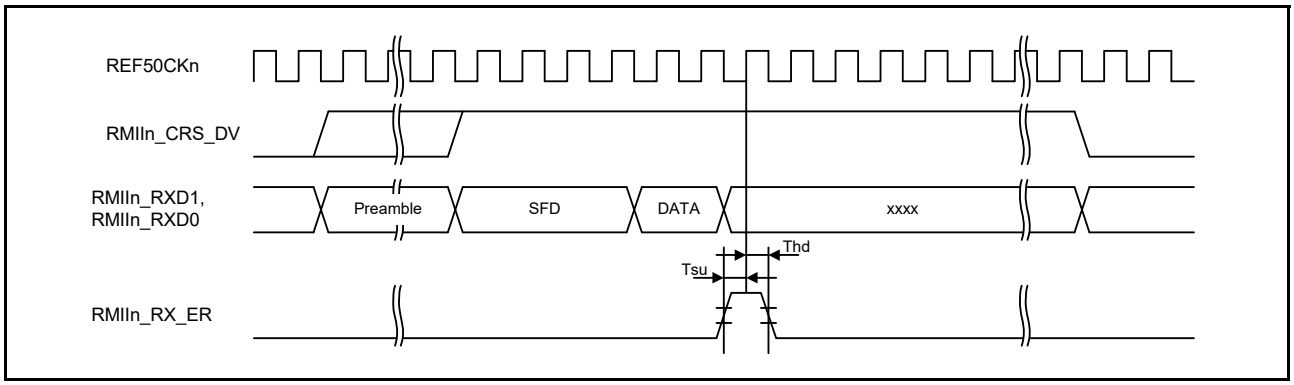

Figure 2.63 RMII reception timing when an error occurs

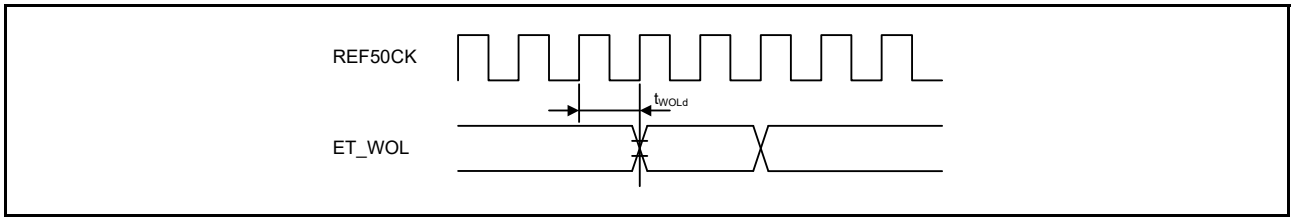

Figure 2.64 WOL output timing for RMII

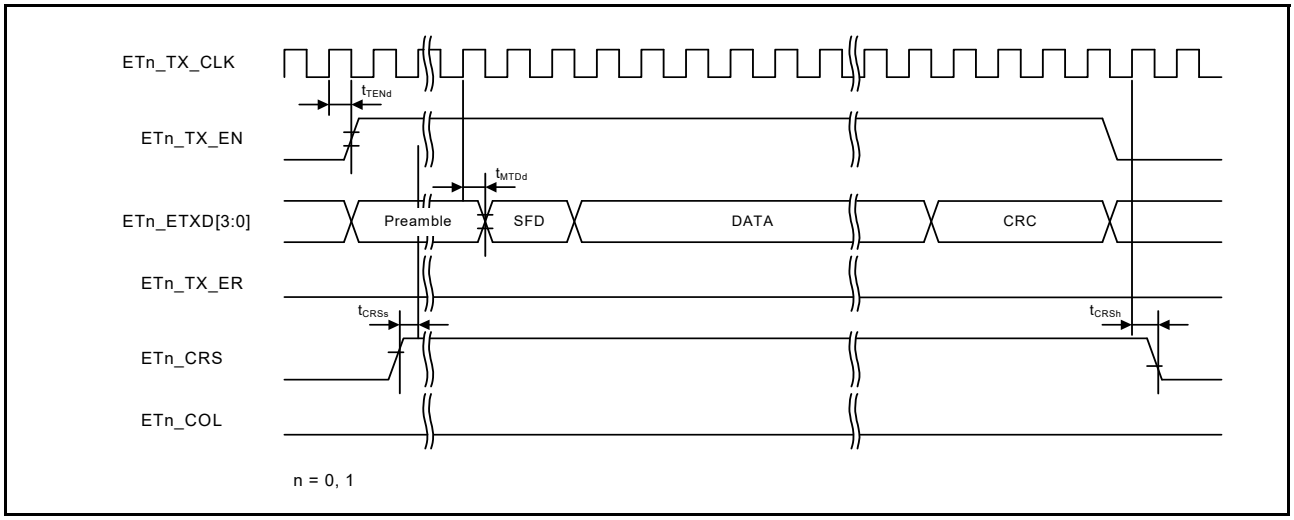

Figure 2.65 MII transmission timing in normal operation

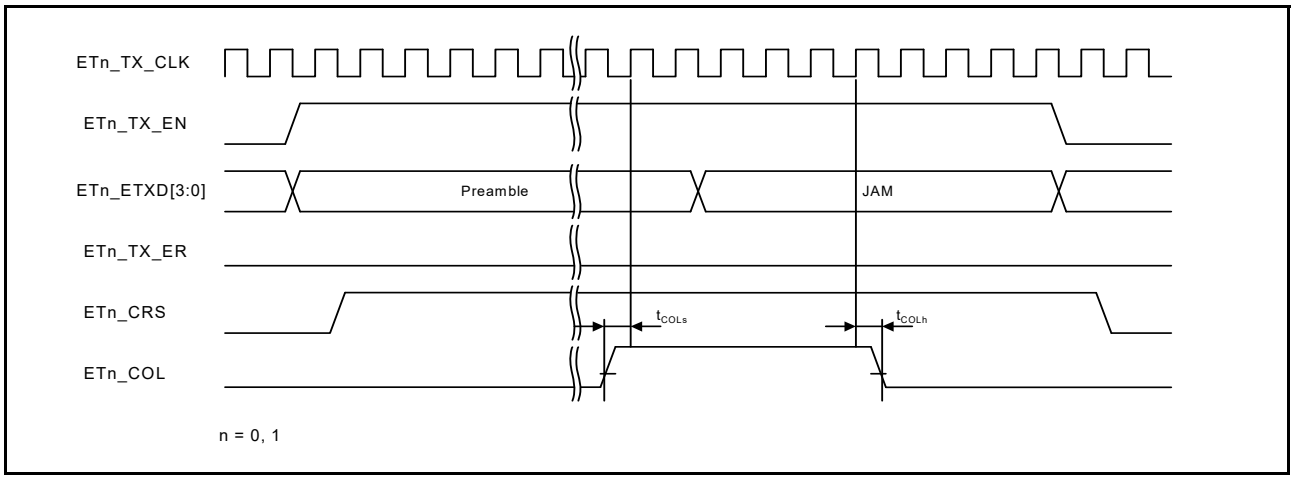

Figure 2.66 MII transmission timing when a conflict occurs

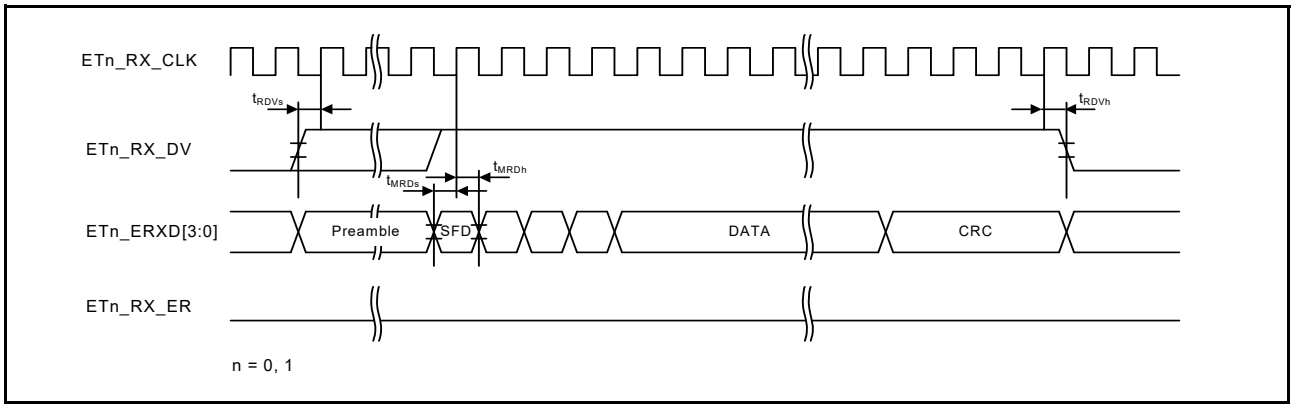

Figure 2.67 MII reception timing in normal operation

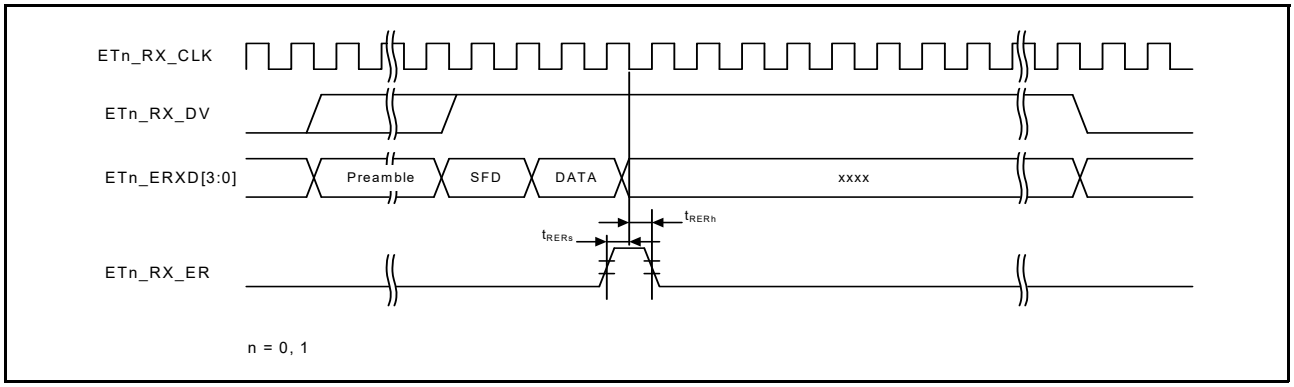

Figure 2.68 MII reception timing when an error occurs

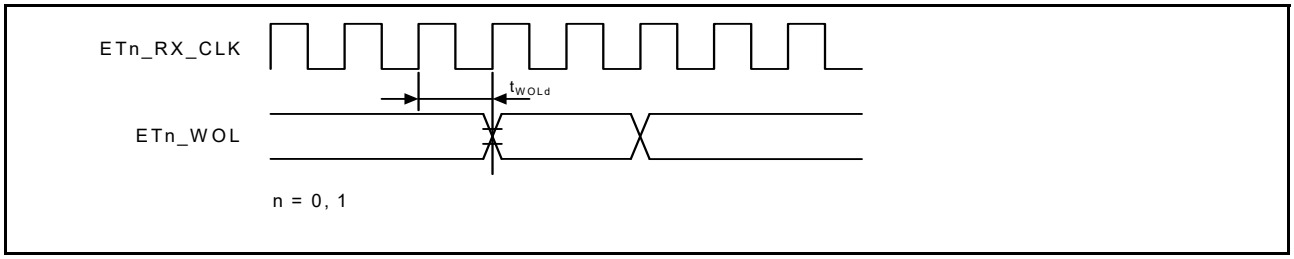

Figure 2.69 WOL output timing for MII

2.3.17 PDC Timing

Table 2.32 PDC timing

Conditions: Middle drive output is selected in the port drive capability bit in the PmnPFS register.
Output load conditions: V_{OH} = VCC × 0.5, V_{OL} = VCC × 0.5, C = 30 pF

Item		Symbol	Min	Max	Unit	Test conditions
PDC	PIXCLK input cycle time	t_{PIXcyc}	37	-	ns	Figure 2.70
	PIXCLK input high pulse width	t_{PIXH}	10	-	ns	
	PIXCLK input low pulse width	t_{PIXL}	10	-	ns	
	PIXCLK rise time	t_{PIXr}	-	5	ns	
	PIXCLK fall time	t_{PIXf}	-	5	ns	
	PCKO output cycle time	t_{PCKcyc}	2 × t_{PBcyc}	-	ns	Figure 2.71
	PCKO output high pulse width	t_{PCKH}	$(t_{PCKcyc} - t_{PCKr} - t_{PCKf})/2 - 3$	-	ns	
	PCKO output low pulse width	t_{PCKL}	$(t_{PCKcyc} - t_{PCKr} - t_{PCKf})/2 - 3$	-	ns	
	PCKO rise time	t_{PCKr}	-	5	ns	
	PCKO fall time	t_{PCKf}	-	5	ns	
	VSYNV/HSYNC input setup time	t_{SYNCS}	10	-	ns	Figure 2.72
	VSYNV/HSYNC input hold time	t_{SYNCH}	5	-	ns	
	PIXD input setup time	t_{PIXDS}	10	-	ns	
	PIXD input hold time	t_{PIXDH}	5	-	ns	

Note 1. t_{PBcyc}: PCLKB cycle.

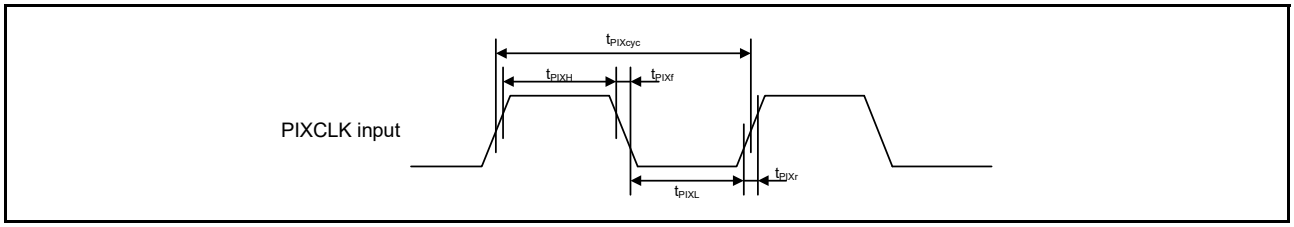

Figure 2.70 PDC input clock timing

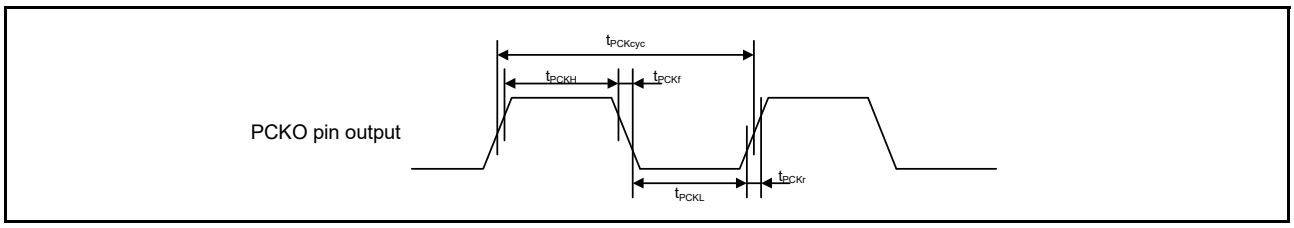

Figure 2.71 PDC output clock timing

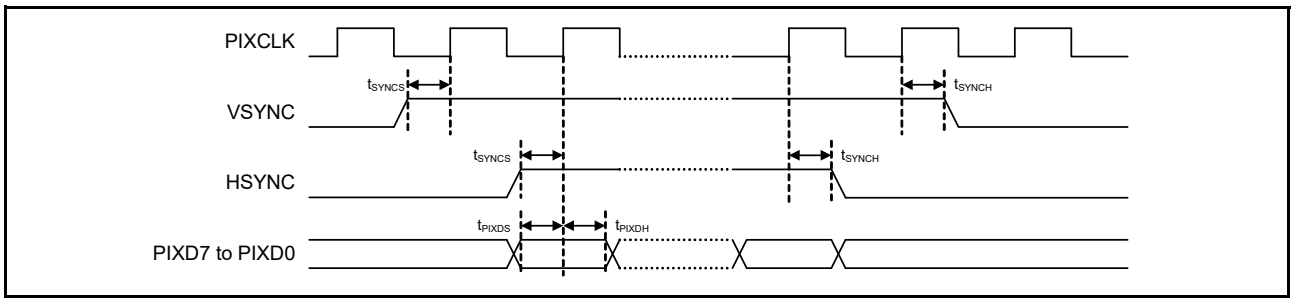

Figure 2.72 PDC AC timing

2.3.18 Graphics LCD Controller Timing

Table 2.33 Graphics LCD Controller timing

Conditions:
LCD_CLK: High drive output is selected in the port drive capability bit in the PmnPFS register.
LCD_DATA: Middle drive output is selected in the port drive capability bit in the PmnPFS register.

Item		Symbol	Min	Typ	Max	Unit	Test conditions
LCD_EXTCLK input clock frequency		t_{Ecyc}	-	-	60*1	MHz	Figure 2.73
LCD_EXTCLK input clock low pulse width		t_{WL}	0.45	-	0.55	t_{Ecyc}	
LCD_EXTCLK input clock high pulse width		t_{WH}	0.45	-	0.55		
LCD_CLK output clock frequency		t_{Lcyc}	-	-	60*1	MHz	Figure 2.74
LCD_CLK output clock low pulse width		t_{LOL}	0.4	-	0.6	t_{Lcyc}	Figure 2.74
LCD_CLK output clock high pulse width		t_{LOH}	0.4	-	0.6	t_{Lcyc}	Figure 2.74
LCD data output delay timing	_A or _B combinations*2	t_{DD}	–3.5	-	4	ns	Figure 2.75
	_A and _B combinations*3		–5.0	-	5.5		

Note 1. Parallel RGB888, 666,565: Maximum 54 MHz
Serial RGB888: Maximum 60 MHz (4x speed)
Note 2. Use pins that have a letter appended to their names, for instance, "_A" or "_B", to indicate
Note 3. Pins of group"_A" and "_B" combinations are used.

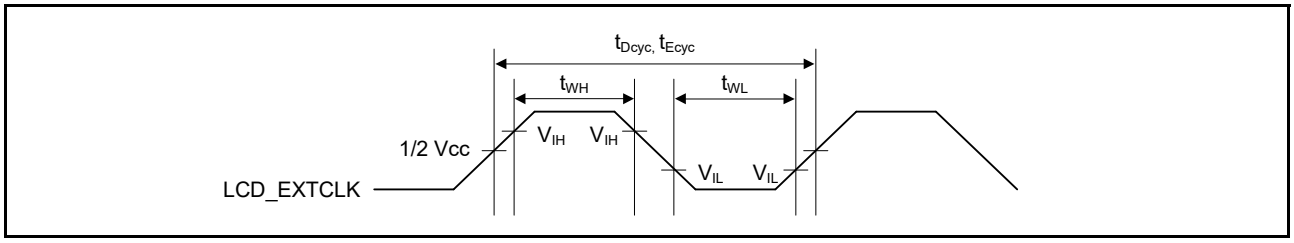

Figure 2.73 LCD_EXTCLK clock input timing

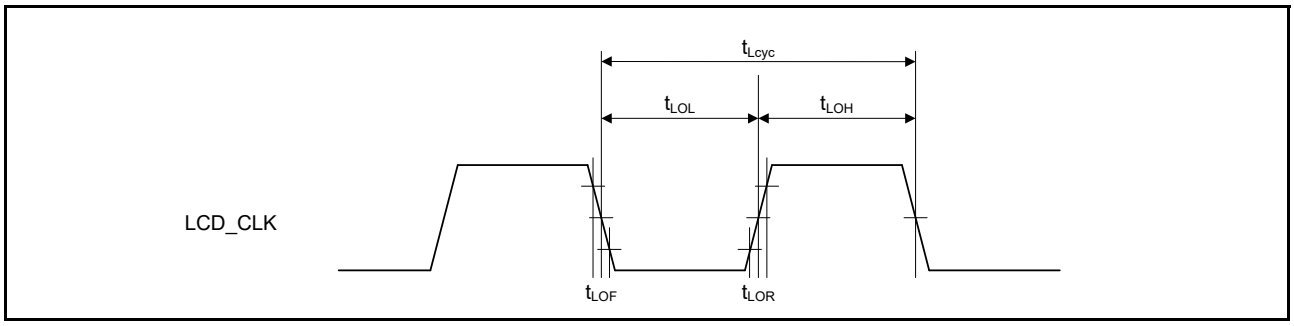

Figure 2.74 LCD_CLK clock output timing

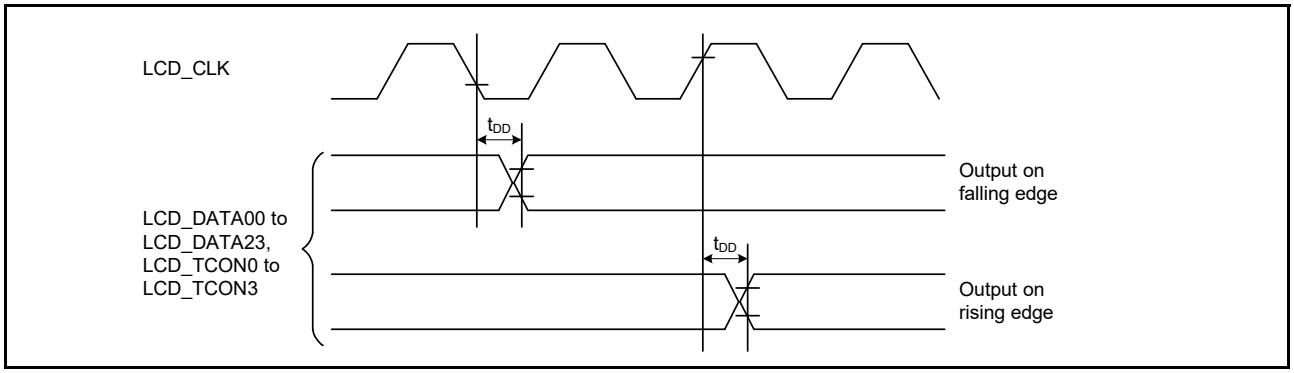

Figure 2.75 Display output timing

2.4 USB Characteristics

2.4.1 USBHS Timing

Table 2.34 USBHS low-speed characteristics for host only (USBHS_DP and USBHS_DM pin characteristics)
Conditions: USBHS_RREF = 2.2 kΩ ± 1%, USBMCLK = 20/24 MHz, UCLK = 48 MHz

Item		Symbol	Min	Typ	Max	Unit	Test conditions	
Input characteristics	Input high voltage	V_{IH}	2.0	-	-	V	-	-
	Input low voltage	V_{IL}	-	-	0.8	V	-	-
	Differential input sensitivity	V_{DI}	0.2	-	-	V	| USBHS_DP - USBHS_DM |	-
	Differential common-mode range	V_{CM}	0.8	-	2.5	V	-	-
Output characteristics	Output high voltage	V_{OH}	2.8	-	3.6	V	I_{OH} = –200 μA	-
	Output low voltage	V_{OL}	0.0	-	0.3	V	I_{OL}= 2 mA	-
	Cross-over voltage	V_{CRS}	1.3	-	2.0	V	-	Figure 2.76, Figure 2.77
	Rise time	t_{LR}	75	-	300	ns	-	
	Fall time	t_{LF}	75	-	300	ns	-	
	Rise/fall time ratio	t_{LR} / t_{LF}	80	-	125	%	t_{LR} / t_{LF}	-
Pull-up, Pull-down characteristics	USBHS_DP and USBHS_DM pull-down resistors (host)	R_{pd}	14.25	-	24.80	kΩ	-	

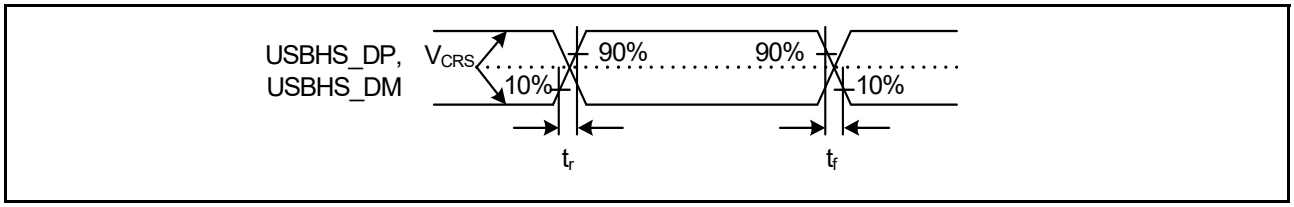

Figure 2.76 USBHS_DP and USBHS_DM output timing in low-speed mode

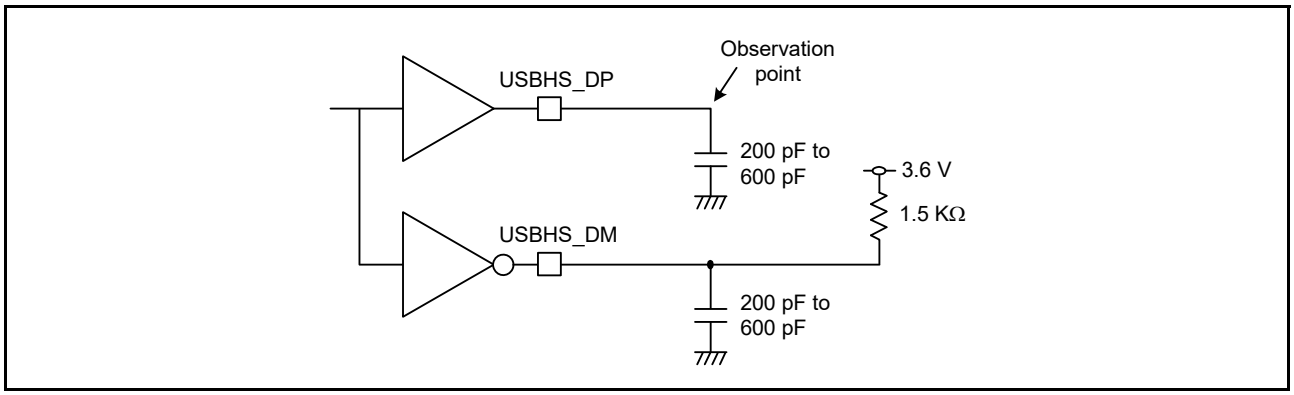

Figure 2.77 Test circuit in low-speed mode

Table 2.35 USBHS full-speed characteristics (USBHS_DP and USBHS_DM pin characteristics)
Conditions: USBHS_RREF = 2.2 kΩ ± 1%, USBMCLK = 20/24 MHz, UCLK = 48 MHz

Item		Symbol	Min	Typ	Max	Unit	Test conditions	
Input characteristics	Input high voltage	V_{IH}	2.0	-	-	V	-	-
	Input low voltage	V_{IL}	-	-	0.8	V	-	-
	Differential input sensitivity	V_{DI}	0.2	-	-	V	| USBHS_DP - USBHS_DM |	-
	Differential common-mode range	V_{CM}	0.8	-	2.5	V	-	-
Output characteristics	Output high voltage	V_{OH}	2.8	-	3.6	V	I_{OH} = –200 μA	-
	Output low voltage	V_{OL}	0.0	-	0.3	V	I_{OL}= 2 mA	-
	Cross-over voltage	V_{CRS}	1.3	-	2.0	V	-	Figure 2.78, Figure 2.79
	Rise time	t_{LR}	4	-	20	ns	-	
	Fall time	t_{LF}	4	-	20	ns	-	
	Rise/fall time ratio	t_{LR} / t_{LF}	90	-	111.11	%	t_{FR} / t_{FF}	-
	Output resistance	Z_{DRV}	40.5	-	49.5	Ω	Rs Not used (PHYSET.REPSEL[1:0] = 01b and PHYSET. HSEB = 0)	
DC characteristics	USBHS_DM pull-up resistor (device)	R_{pu}	0.900	-	1.575	kΩ	During idle state	
			1.425	-	3.090	kΩ	During transmission and reception	
	USBHS_DP/USBHS_DM pull-down resistor (host)	R_{pd}	14.25	-	24.80	kΩ	-	

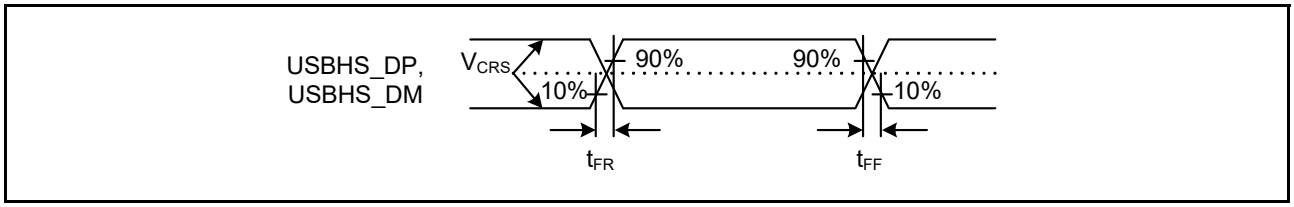

Figure 2.78 USBHS_DP and USBHS_DM output timing in full-speed mode

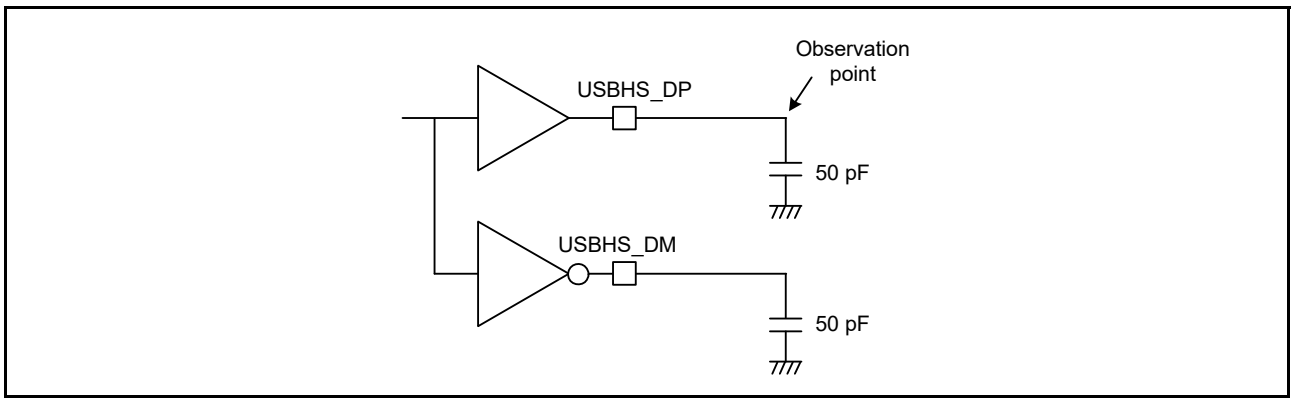

Figure 2.79 Test circuit in full-speed mode

Table 2.36 USBHS high-speed characteristics (USBHS_DP and USBHS_DM pin characteristics)
Conditions: USBHS_RREF = 2.2 kΩ ± 1%, USBMCLK = 20/24 MHz

Item		Symbol	Min	Typ	Max	Unit	Test conditions
Input characteristics	Squelch detect sensitivity	V_{HSSQ}	100	-	150	mV	Figure 2.80
	Disconnect detect sensitivity	V_{HSDSC}	525	-	625	mV	Figure 2.81
	Common-mode voltage	V_{HSCM}	–50	-	500	mV	-
Output characteristics	Idle state	V_{HSOI}	–10.0	-	10	mV	-
	Output high voltage	V_{HSOH}	360	-	440	mV	
	Output low voltage	V_{HSOL}	–10.0	-	10	mV	
	Chirp J output voltage (difference)	V_{CHIRPJ}	700	-	1100	mV	
	Chirp K output voltage (difference)	V_{CHIRPK}	–900	-	–500	mV	
AC characteristics	Rise time	t_{HSR}	500	-	-	ps	Figure 2.82
	Fall time	t_{HSF}	500	-	-	ps	
	Output resistance	Z_{HSDRV}	40.5	-	49.5	Ω	-

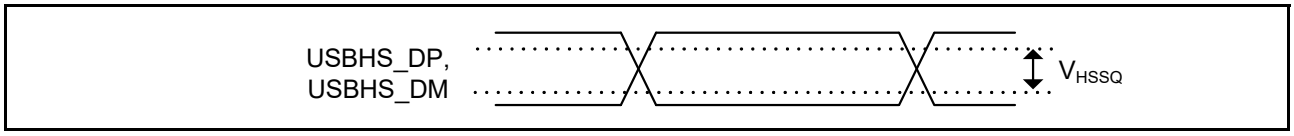

Figure 2.80 USBHS_DP and USBHS_DM squelch detect sensitivity in high-speed mode

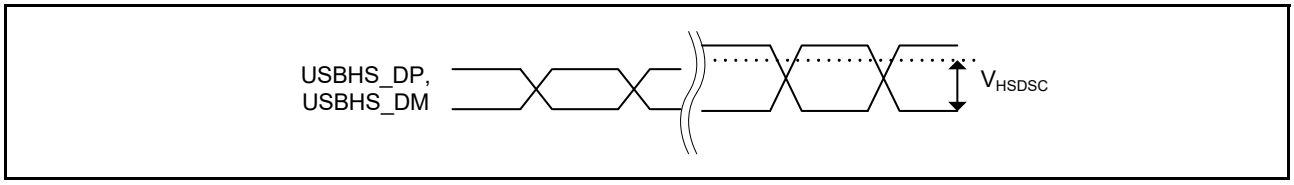

Figure 2.81 USBHS_DP and USBHS_DM disconnect detect sensitivity in high-speed mode

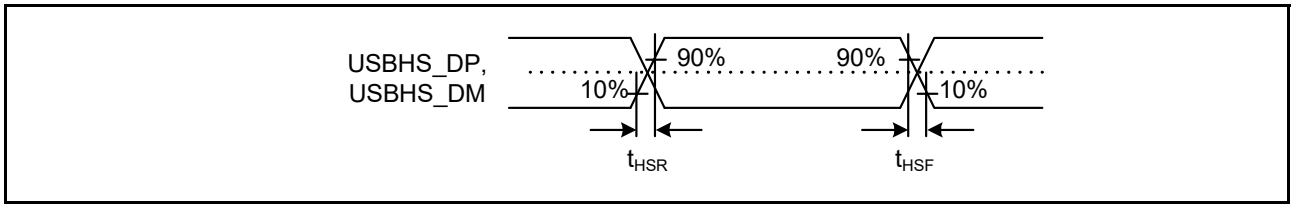

Figure 2.82 USBHS_DP and USBHS_DM output timing in high-speed mode

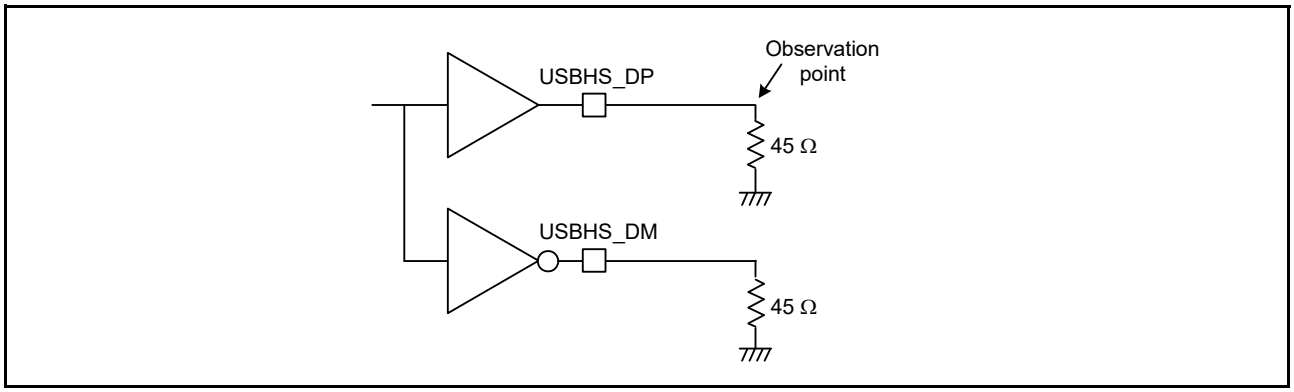

Figure 2.83 Test circuit in high-speed mode

Table 2.37 USBHS high-speed characteristics (USBHS_DP and USBHS_DM pin characteristics)
Conditions: USBHS_RREF = 2.2 kΩ ± 1%, USBMCLK = 20/24 MHz

Item		Symbol	Min	Max	Unit	Test conditions
Battery Charging Specification	D+ sink current	I_{DP_SINK}	25	175	μA	-
	D– sink current	I_{DM_SINK}	25	175	μA	-
	DCD source current	I_{DP_SRC}	7	13	μA	-
	Data detection voltage	V_{DAT_REF}	0.25	0.4	V	-
	D+ source voltage	V_{DP_SRC}	0.5	0.7	V	Output current = 250 μA
	D– source voltage	V_{DM_SRC}	0.5	0.7	V	Output current = 250 μA

2.4.2 USBFS Timing

Table 2.38 USBFS low-speed characteristics for host only (USB_DP and USB_DM pin characteristics)
Conditions: VCC = AVCC0 = VCC_USB = VBATT = 3.0 to 3.6V, 2.7 ≤ VREFH0/VREFH ≤ AVCC0, VCC_USBHS = AVCC_USBHS = 3.0 to 3.6 V, UCLK = 48 MHz

Item		Symbol	Min	Typ	Max	Unit	Test conditions
Input characteristics	Input high voltage	V_{IH}	2.0	-	-	V	-
	Input low voltage	V_{IL}	-	-	0.8	V	-
	Differential input sensitivity	V_{DI}	0.2	-	-	V	| USB_DP - USB_DM |
	Differential common-mode range	V_{CM}	0.8	-	2.5	V	-
Output characteristics	Output high voltage	V_{OH}	2.8	-	3.6	V	I_{OH} = –200 μA
	Output low voltage	V_{OL}	0.0	-	0.3	V	I_{OL}= 2 mA
	Cross-over voltage	V_{CRS}	1.3	-	2.0	V	Figure 2.84
	Rise time	t_{LR}	75	-	300	ns	
	Fall time	t_{LF}	75	-	300	ns	
	Rise/fall time ratio	t_{LR} / t_{LF}	80	-	125	%	t_{LR}/ t_{LF}
Pull-up and pull-down characteristics	USB_DP and USB_DM pull-down resistance in host controller mode	R_{pd}	14.25	-	24.80	kΩ	-

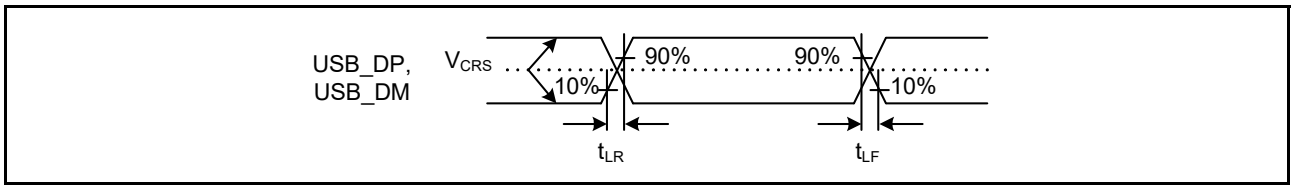

Figure 2.84 USB_DP and USB_DM output timing in low-speed mode

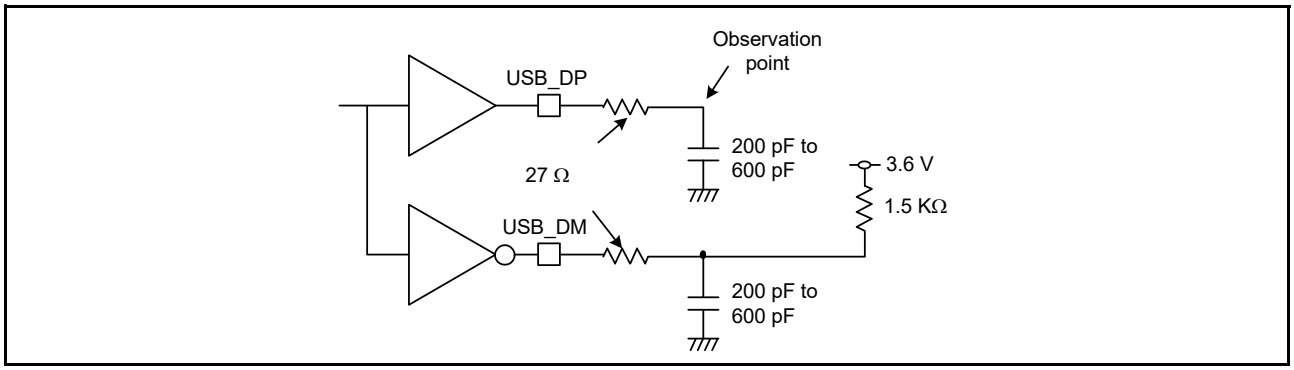

Figure 2.85 Test circuit in low-speed mode

Table 2.39 USBFS full-speed characteristics (USB_DP and USB_DM pin characteristics)
Conditions: VCC = AVCC0 = VCC_USB = VBATT = 3.0 to 3.6 V, 2.7 ≤ VREFH0/VREFH ≤ AVCC0, VCC_USBHS = AVCC_USBHS = 3.0 to 3.6 V, UCLK = 48 MHz

Item		Symbol	Min	Typ	Max	Unit	Test conditions
Input characteristics	Input high voltage	V_{IH}	2.0	-	-	V	-
	Input low voltage	V_{IL}	-	-	0.8	V	-
	Differential input sensitivity	V_{DI}	0.2	-	-	V	| USB_DP - USB_DM |
	Differential common-mode range	V_{CM}	0.8	-	2.5	V	-
Output characteristics	Output high voltage	V_{OH}	2.8	-	3.6	V	I_{OH} = –200 μA
	Output low voltage	V_{OL}	0.0	-	0.3	V	I_{OL}= 2 mA
	Cross-over voltage	V_{CRS}	1.3	-	2.0	V	Figure 2.86
	Rise time	t_{LR}	4	-	20	ns	
	Fall time	t_{LF}	4	-	20	ns	
	Rise/fall time ratio	t_{LR} / t_{LF}	90	-	111.11	%	t_{FR}/ t_{FF}
	Output resistance	Z_{DRV}	28	-	44	Ω	USBFS: Rs = 27 Ω included
Pull-up and pull-down characteristics	DM pull-up resistance in device controller mode	R_{pu}	0.900	-	1.575	kΩ	During idle state
			1.425	-	3.090	kΩ	During transmission and reception
	USB_DP and USB_DM pull-down resistance in host controller mode	R_{pd}	14.25	-	24.80	kΩ	-

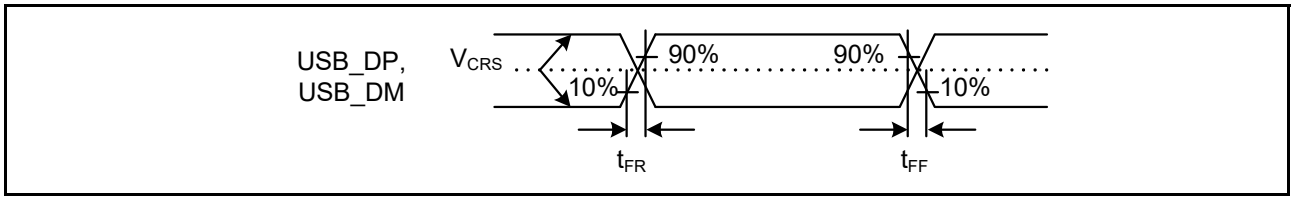

Figure 2.86 USB_DP and USB_DM output timing in full-speed mode

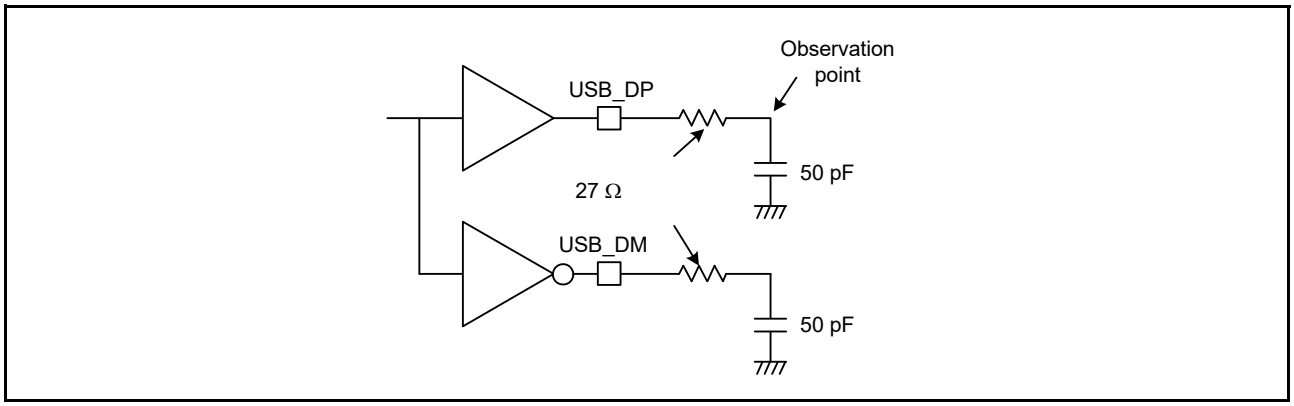

Figure 2.87 Test circuit in full-speed mode

2.5 ADC12 Characteristics

Table 2.40 A/D conversion characteristics for unit 0
Conditions: PCLKC = 1 to 60 MHz

Item			Min	Typ	Max	Unit	Test conditions
Frequency			1	-	60	MHz	-
Analog input capacitance			-	-	30	pF	-
Quantization error			-	±0.5	-	LSB	-
Resolution			-	-	12	Bits	-
Channel-dedicated sample-and-hold circuits in use (AN000 to AN002)	Conversion time*1 (operation at PCLKC = 60 MHz)	Permissible signal source impedance Max. = 1 kΩ	1.06 (0.4 + 0.25)*2	-	-	μs	• Sampling of channel-dedicated sample-and-hold circuits in 24 states • Sampling in 15 states
	Offset error		-	±1.5	±3.5	LSB	AN000 to AN002 = 0.25 V
	Full-scale error		-	±1.5	±3.5	LSB	AN000 to AN002 = VREFH0- 0.25 V
	Absolute accuracy		-	±2.5	±5.5	LSB	-
	DNL differential nonlinearity error		-	±1.0	±2.0	LSB	-
	INL integral nonlinearity error		-	±1.5	±3.0	LSB	-
	Holding characteristics of sample-and hold circuits		-	-	20	μs	-
	Dynamic range		0.25	-	VREFH 0 –0.25	V	-
Channel-dedicated sample-and-hold circuits not in use (AN000 to AN002)	Conversion time*1 (operation at PCLKC = 60 MHz)	Permissible signal source impedance Max. = 1 kΩ	0.88 (0.667)*2	-	-	μs	Sampling in 40 states
	Offset error		-	±1.0	±2.5	LSB	-
	Full-scale error		-	±1.0	±2.5	LSB	-
	Absolute accuracy		-	±2.0	±4.5	LSB	-
	DNL differential nonlinearity error		-	±0.5	±1.5	LSB	-
	INL integral nonlinearity error		-	±1.0	±2.5	LSB	-
High-precision channels (AN003 to AN006)	Conversion time*1 (operation at PCLKC = 60 MHz)	Permissible signal source impedance Max. = 1 kΩ	0.48 (0.267)*2	-	-	μs	Sampling in 16 states
		Max. = 300Ω	0.40 (0.183)*2	-	-	μs	Sampling in 11 states VCC = AVCC0 = 3.0 to 3.6 V 3.0 V ≤ VREFH0 ≤ AVCC0
	Offset error		-	±1.0	±2.5	LSB	-
	Full-scale error		-	±1.0	±2.5	LSB	-
	Absolute accuracy		-	±2.0	±4.5	LSB	-
	DNL differential nonlinearity error		-	±0.5	±1.5	LSB	-
	INL integral nonlinearity error		-	±1.0	±2.5	LSB	-
Normal-precision channels (AN016 to AN021)	Conversion time*1 (Operation at PCLKC = 60 MHz)	Permissible signal source impedance Max. = 1 kΩ	0.88 (0.667)*2	-	-	μs	Sampling in 40 states
	Offset error		-	±1.0	±5.5	LSB	-
	Full-scale error		-	±1.0	±5.5	LSB	-
	Absolute accuracy		-	±2.0	±7.5	LSB	-
	DNL differential nonlinearity error		-	±0.5	±4.5	LSB	-
	INL integral nonlinearity error		-	±1.0	±5.5	LSB	-

Note: These specification values apply when there is no access to the external bus during A/D conversion. If access occurs during A/D conversion, values might not fall within the indicated ranges.

Note 1. The conversion time includes the sampling and comparison times. The number of sampling states is indicated for the test conditions.

Note 2. Values in parentheses indicate the sampling time.

Table 2.41 A/D conversion characteristics for unit 1
Conditions: PCLKC = 1 to 60 MHz

Item			Min	Typ	Max	Unit	Test conditions
Frequency			1	-	60	MHz	-
Analog input capacitance			-	-	30	pF	-
Quantization error			-	±0.5	-	LSB	-
Resolution			-	-	12	Bits	-
Channel-dedicated sample-and-hold circuits in use (AN100 to AN102)	Conversion time*1 (operation at PCLKC = 60 MHz)	Permissible signal source impedance Max. = 1 kΩ	1.06 (0.4 + 0.25)*2	-	-	μs	• Sampling of channel-dedicated sample-and-hold circuits in 24 states • Sampling in 15 states
	Offset error		-	±1.5	±3.5	LSB	AN100 to AN102 = 0.25 V
	Full-scale error		-	±1.5	±3.5	LSB	AN100 to AN102 = VREFH - 0.25 V
	Absolute accuracy		-	±2.5	±5.5	LSB	-
	DNL differential nonlinearity error		-	±1.0	±2.0	LSB	-
	INL integral nonlinearity error		-	±1.5	±3.0	LSB	-
	Holding characteristics of sample-and hold circuits		-	-	20	μs	-
	Dynamic range		0.25	-	VREFH – 0.25	V	-
Channel-dedicated sample-and-hold circuits not in use (AN100 to AN102)	Conversion time*1 (Operation at PCLKC = 60 MHz)	Permissible signal source impedance Max. = 1 kΩ	0.88 (0.667)*2	-	-	μs	Sampling in 40 states
	Offset error		-	±1.0	±2.5	LSB	-
	Full-scale error		-	±1.0	±2.5	LSB	-
	Absolute accuracy		-	±2.0	±4.5	LSB	-
	DNL differential nonlinearity error		-	±0.5	±1.5	LSB	-
	INL integral nonlinearity error		-	±1.0	±2.5	LSB	-
High-precision channels (AN103 to AN106)	Conversion time*1 (Operation at PCLKC = 60 MHz)	Permissible signal source impedance Max. = 1 kΩ	0.48 (0.267)*2	-	-	μs	Sampling in 16 states
		Max. = 300Ω	0.40 (0.183)*2	-	-	μs	Sampling in 11 states VCC = AVCC0 = 3.0 to 3.6 V 3.0 V ≤ VREFH ≤ AVCC0
	Offset error		-	±1.0	±2.5	LSB	-
	Full-scale error		-	±1.0	±2.5	LSB	-
	Absolute accuracy		-	±2.0	±4.5	LSB	-
	DNL differential nonlinearity error		-	±0.5	±1.5	LSB	-
	INL integral nonlinearity error		-	±1.0	±2.5	LSB	-
Normal-precision channels (AN116 to AN120)	Conversion time*1 (Operation at PCLKC = 60 MHz)	Permissible signal source impedance Max. = 1 kΩ	0.88 (0.667)*2	-	-	μs	Sampling in 40 states
	Offset error		-	±1.0	±5.5	LSB	-
	Full-scale error		-	±1.0	±5.5	LSB	-
	Absolute accuracy		-	±2.0	±7.5	LSB	-
	DNL differential nonlinearity error		-	±0.5	±4.5	LSB	-
	INL integral nonlinearity error		-	±1.0	±5.5	LSB	-

Note: These specification values apply when there is no access to the external bus during A/D conversion. If access occurs during A/D conversion, values might not fall within the indicated ranges.

Note 1. The conversion time includes the sampling and comparison times. The number of sampling states is indicated for the test conditions.

Note 2. Values in parentheses indicate the sampling time.

Table 2.42 A/D internal reference voltage characteristics

Item	Min	Typ	Max	Unit	Test conditions
A/D internal reference voltage	1.20	1.25	1.30	V	-
Sampling time	4.15	-	-	μs	-

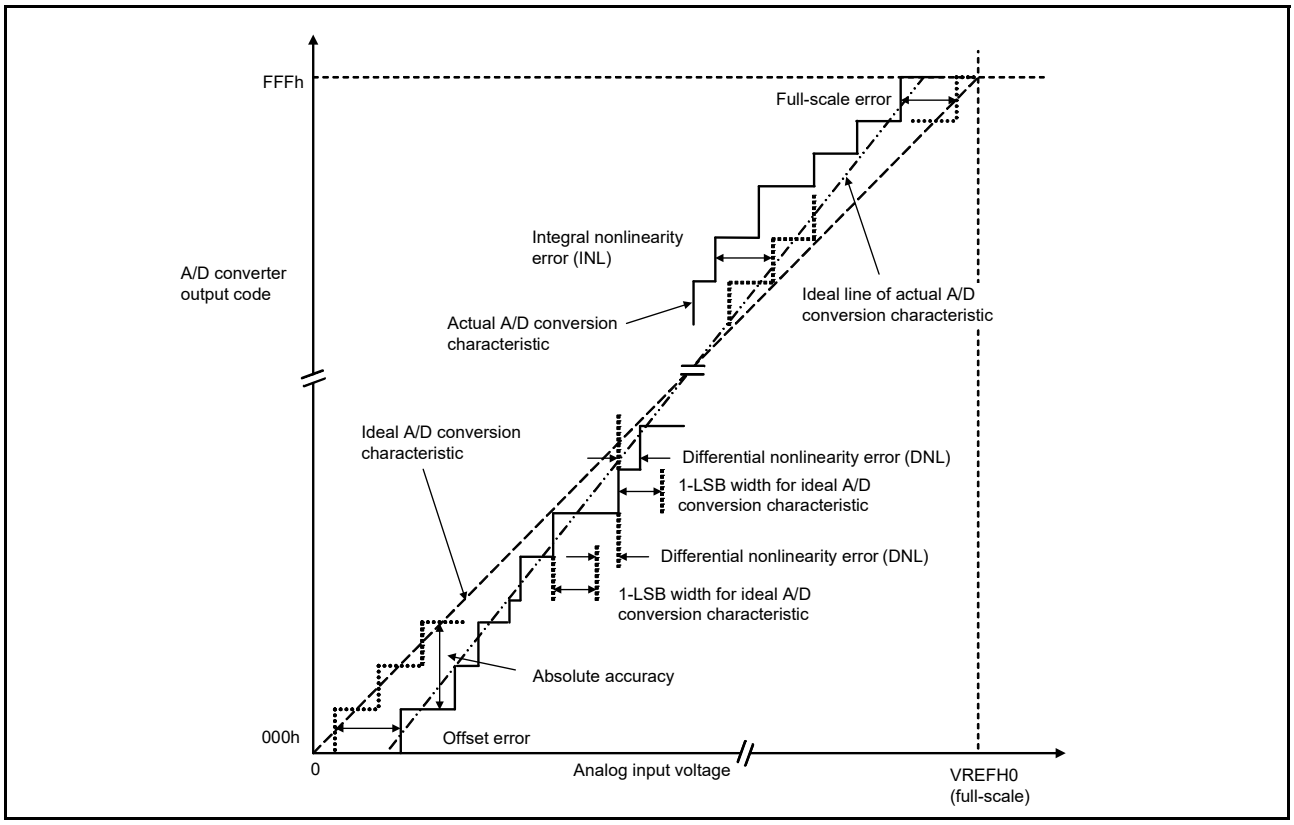

Figure 2.88 Illustration of ADC12 characteristic terms

Absolute accuracy

Absolute accuracy is the difference between output code based on the theoretical A/D conversion characteristics, and the actual A/D conversion result. When measuring absolute accuracy, the voltage at the midpoint of the width of the analog input voltage (1-LSB width), which can meet the expectation of outputting an equal code based on the theoretical A/D conversion characteristics, is used as an analog input voltage. For example, if 12-bit resolution is used and the reference voltage VREFH0 = 3.072 V, then 1-LSB width becomes 0.75 mV, and 0 mV, 0.75 mV, and 1.5 mV are used as the analog input voltages. If the analog input voltage is 6 mV, an absolute accuracy of ±5 LSB means that the actual A/D conversion result is in the range of 003h to 00Dh, though an output code of 008h can be expected from the theoretical A/D conversion characteristics.

Integral nonlinearity error (INL)

Integral nonlinearity error is the maximum deviation between the ideal line when the measured offset and full-scale errors are zeroed, and the actual output code.

Differential nonlinearity error (DNL)

Differential nonlinearity error is the difference between the 1-LSB width based on the ideal A/D conversion characteristics and the width of the actual output code.

Offset error

Offset error is the difference between the transition point of the ideal first output code and the actual first output code.

Full-scale error

Full-scale error is the difference between the transition point of the ideal last output code and the actual last output code.

2.6 DAC12 Characteristics

Table 2.43 D/A conversion characteristics

Item	Min	Typ	Max	Unit	Test conditions
Resolution	-	-	12	Bits	-
Without output amplifier					
Absolute accuracy	-	-	±24	LSB	Resistive load 2 MΩ
INL	-	±2.0	±8.0	LSB	Resistive load 2 MΩ
DNL		±1.0	±2.0	LSB	-
Output impedance	-	7.5	-	kΩ	-
Conversion time	-	-	3.0	μs	Capacitive load 20 pF
Output voltage range	0	-	VREFH	V	-
With output amplifier					
INL	-	±2.0	±4.0	LSB	-
DNL	-	±1.0	±2.0	LSB	-
Conversion time	-	-	4.0	μs	-
Resistive load	5	-	-	kΩ	-
Capacitive load	-	-	50	pF	-
Output voltage range	0.2	-	VREFH – 0.2	V	-

2.7 TSN Characteristics

Table 2.44 TSN characteristics

Item	Symbol	Min	Typ	Max	Unit	Test conditions
Relative accuracy	-	-	±1.0	-	°C	-
Temperature slope	-	-	4.1	-	mV/°C	-
Output voltage (at 25°C)	-	-	1.24	-	V	-
Temperature sensor start time	t_{START}	-	-	30	μs	-
Sampling time	-	4.15	-	-	μs	-

2.8 OSC Stop Detect Characteristics

Table 2.45 Oscillation stop detection circuit characteristics

Item	Symbol	Min	Typ	Max	Unit	Test conditions
Detection time	t_{dr}	-	-	1	ms	Figure 2.89

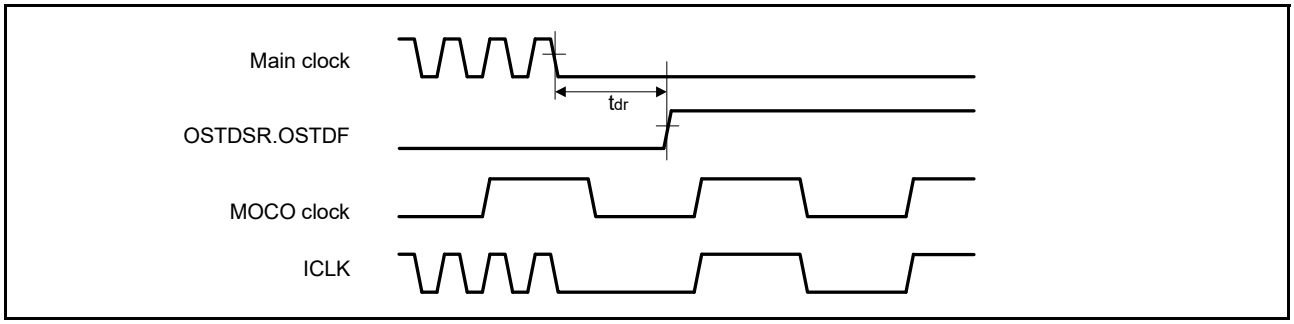

Figure 2.89 Oscillation stop detection timing

2.9 POR and LVD Characteristics

Table 2.46 Power-on reset circuit and voltage detection circuit characteristics

Item			Symbol	Min	Typ	Max	Unit	Test conditions
Voltage detection level	Power-on reset (POR)	Module-stop function disabled*1	V_{POR}	2.5	2.6	2.7	V	Figure 2.90
		Module-stop function enabled*2		2.0	2.35	2.7		
	Voltage detection circuit (LVD0)		V_{det0_1}	2.84	2.94	3.04		Figure 2.91
			V_{det0_2}	2.77	2.87	2.97		
			V_{det0_3}	2.70	2.80	2.90		
	Voltage detection circuit (LVD1)		V_{det1_1}	2.89	2.99	3.09		Figure 2.92
			V_{det1_2}	2.82	2.92	3.02		
			V_{det1_3}	2.75	2.85	2.95		
	Voltage detection circuit (LVD2)		V_{det2_1}	2.89	2.99	3.09		Figure 2.93
			V_{det2_2}	2.82	2.92	3.02		
			V_{det2_3}	2.75	2.85	2.95		
Internal reset time	Power-on reset time		t_{POR}	-	4.6	-	ms	Figure 2.90
	LVD0 reset time		t_{LVD0}	-	0.70	-		Figure 2.91
	LVD1 reset time		t_{LVD1}	-	0.57	-		Figure 2.92
	LVD2 reset time		t_{LVD2}	-	0.57	-		Figure 2.93
Minimum VCC down time			t_{VOFF}	200	-	-	μs	Figure 2.90, Figure 2.91
Response delay			t_{det}	-	-	200	μs	Figure 2.90 to Figure 2.93
LVD operation stabilization time (after LVD is enabled)			$T_{d(E-A)}$	-	-	10	μs	Figure 2.92, Figure 2.93
Hysteresis width (LVD1 and LVD2)			V_{LVH}	-	80	-	mV	

Note 1. The minimum VCC down time indicates the time when VCC is below the minimum value of voltage detection levels V_{POR}, V_{det1}, and V_{det2} for POR and LVD.

Note 2. The low-power function is disabled and DEEPCUT[1:0] = 00b or 01b.

Note 3. The low-power function is enabled and DEEPCUT[1:0] = 11b.

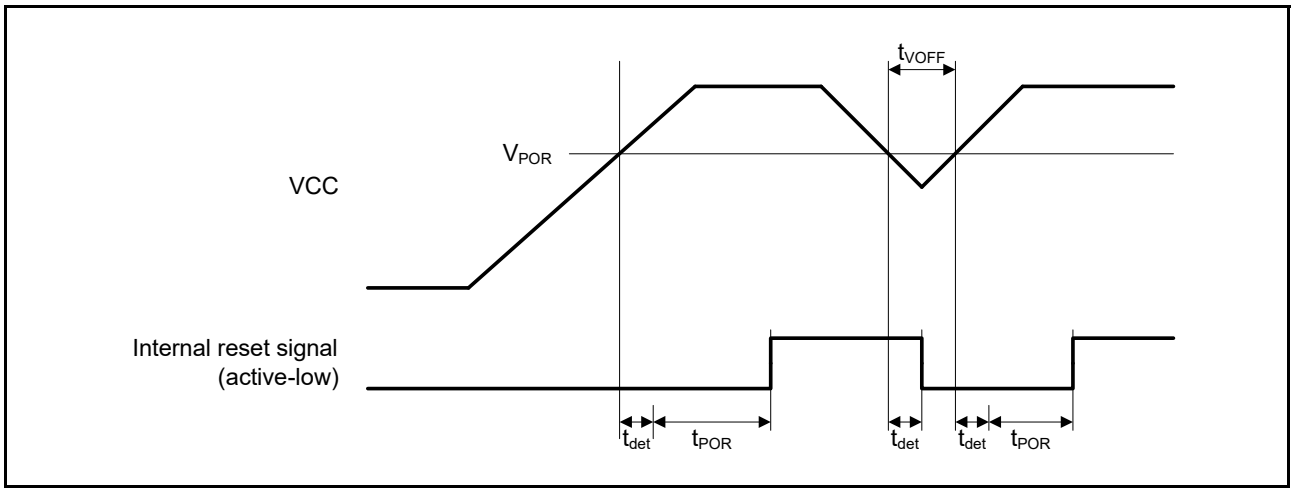

Figure 2.90 Power-on reset timing

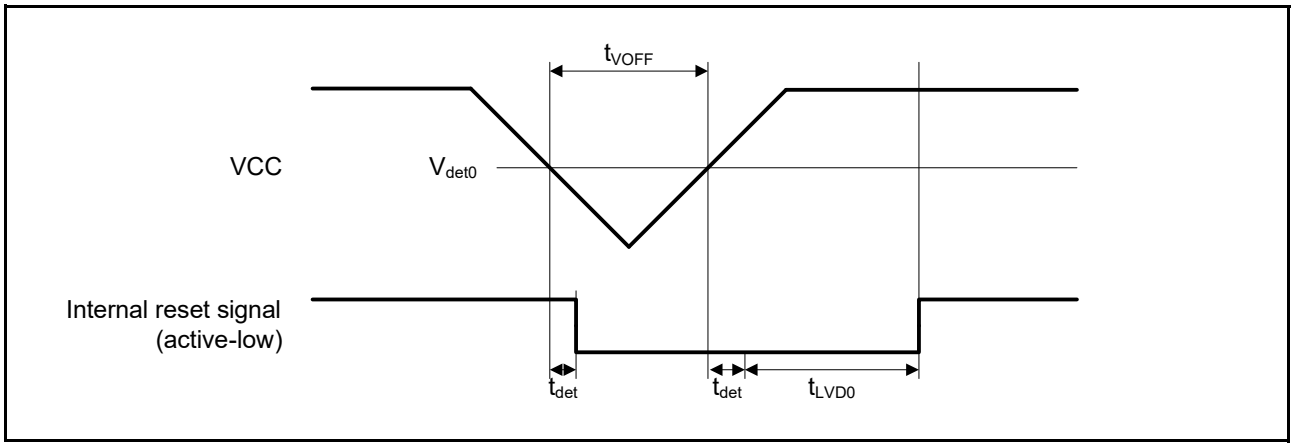

Figure 2.91 Voltage detection circuit timing (V_{det0})

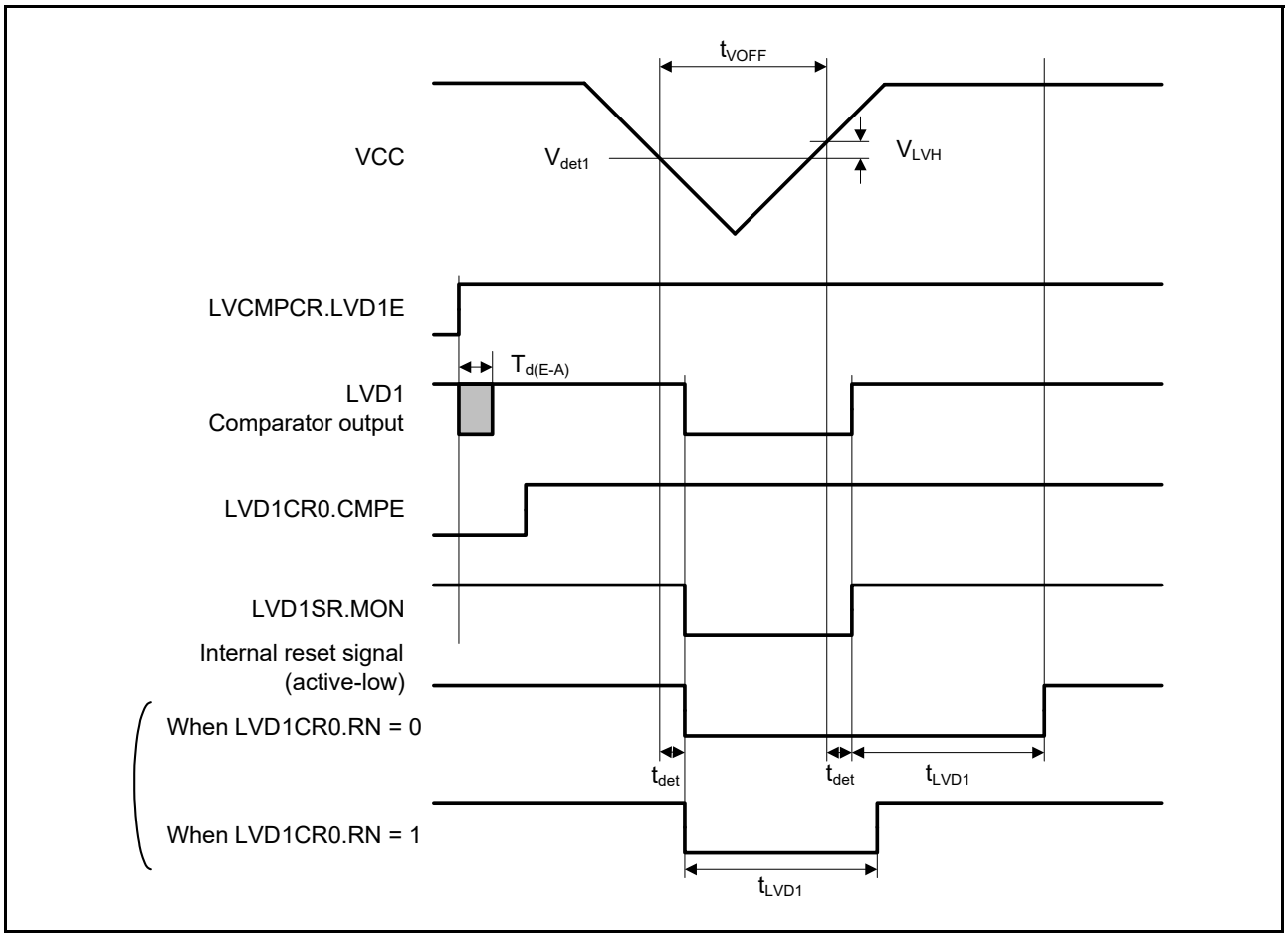

Figure 2.92 Voltage detection circuit timing (V_{det1})

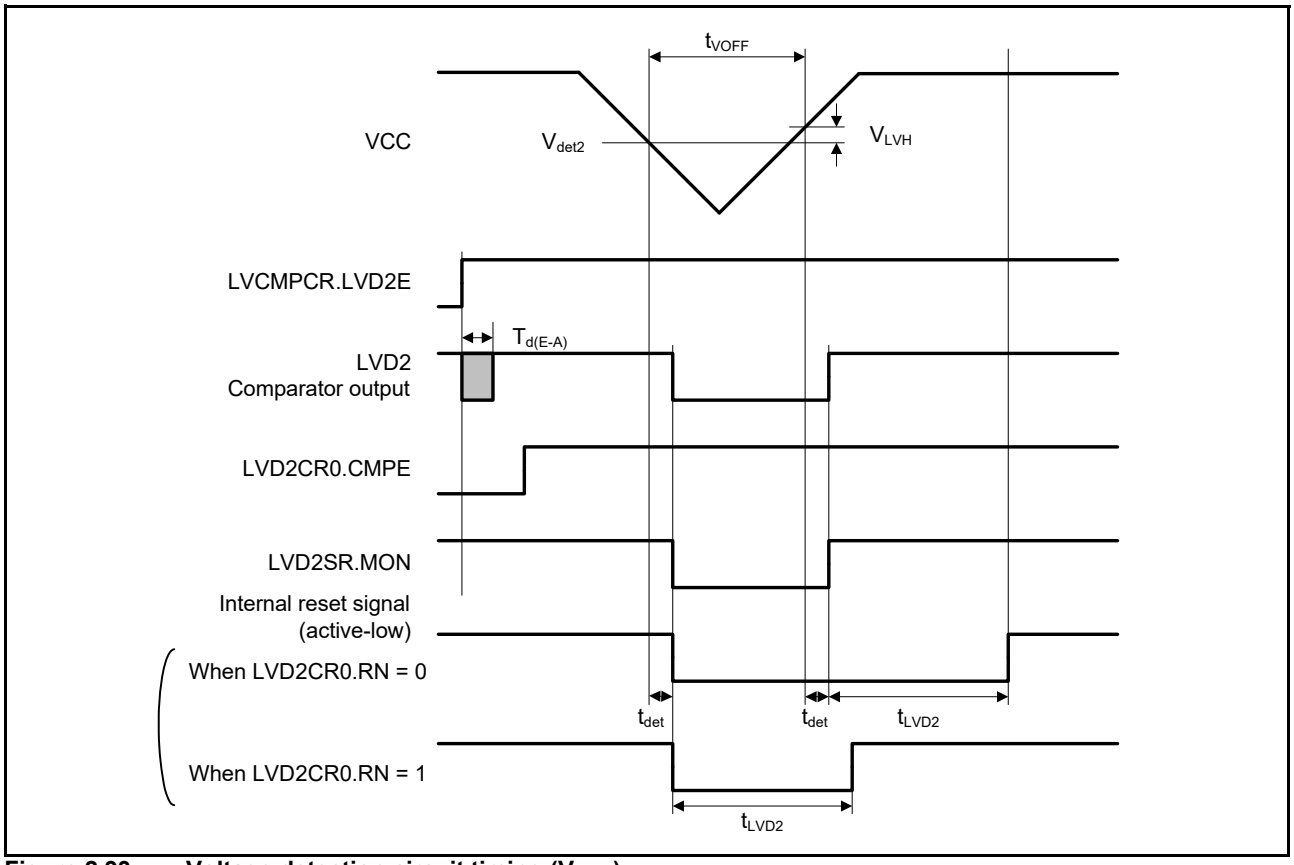

Figure 2.93 Voltage detection circuit timing (V_{det2})

2.10 VBATT Characteristics

Table 2.47 Battery backup function characteristics

Conditions: VCC = AVCC0 = VCC_USB = 2.7 to 3.6 V, 2.7 V ≤ VREFH0/VRFEH ≤ AVCC0, VBATT = 2.0 to 3.6 V

Item	Symbol	Min	Typ	Max	Unit	Test conditions
Voltage level for switching to battery backup	$V_{DETBATT}$	2.50	2.60	2.70	V	Figure 2.94
Lower-limit VBATT voltage for power supply switching caused by VCC voltage drop	V_{BATTSW}	2.70	-	-	V	
VCC-off period for starting power supply switching	$t_{VOFFBATT}$	200	-	-	μs	

Note: The VCC-off period for starting power supply switching indicates the period in which VCC is below the minimum value of the voltage level for switching to battery backup ($V_{DETBATT}$).

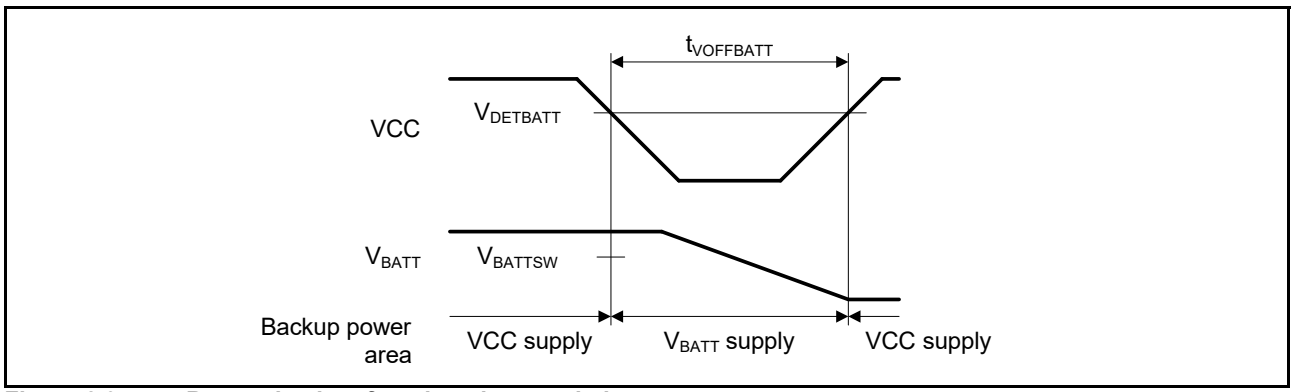

Figure 2.94 Battery backup function characteristics

2.11 CTSU Characteristics

Table 2.48 CTSU characteristics

Item	Symbol	Min	Typ	Max	Unit	Test conditions
External capacitance connected to TSCAP pin	C_{tscap}	9	10	11	nF	-
TS pin capacitive load	C_{base}	-	-	50	pF	-
Permissible output high current	Σ_{IoH}	-	-	-40	mA	When the mutual capacitance method is applied

2.12 Comparator Characteristics

Table 2.49 ACMPHS characteristics

Item	Symbol	Min	Typ	Max	Unit	Test conditions
Reference voltage range	VREF	0	-	AVCC0	V	-
Input voltage range	VI	0	-	AVCC0	V	-
Internal reference voltage	-	1.20	1.25	1.30	V	-
Output delay*1	Td	-	50	100	ns	VI = VREF ± 100 mV

Note 1. This value is the internal propagation delay.

2.13 PGA Characteristics

Table 2.50 PGA characteristics in single mode (1 of 2)

Item	Symbol	Min	Typ	Max	Unit
PGAVSS input voltage range	PGAVSS	0	-	0	V
	AIN0 (G = 2.000)	0.050 × AVCC0	-	0.45 × AVCC0	V
	AIN1 (G = 2.500)	0.047 × AVCC0	-	0.360 × AVCC0	V
	AIN2 (G = 2.667)	0.046 × AVCC0	-	0.337 × AVCC0	V
	AIN3 (G = 2.857)	0.046 × AVCC0	-	0.32 × AVCC0	V
	AIN4 (G = 3.077)	0.045 × AVCC0	-	0.292 × AVCC0	V
	AIN5 (G = 3.333)	0.044 × AVCC0	-	0.265 × AVCC0	V
	AIN6 (G = 3.636)	0.042 × AVCC0	-	0.247 × AVCC0	V
	AIN7 (G = 4.000)	0.040 × AVCC0	-	0.212 × AVCC0	V
	AIN8 (G = 4.444)	0.036 × AVCC0	-	0.191 × AVCC0	V
	AIN9 (G = 5.000)	0.033 × AVCC0	-	0.17 × AVCC0	V
	AIN10 (G = 5.714)	0.031 × AVCC0	-	0.148 × AVCC0	V
	AIN11 (G = 6.667)	0.029 × AVCC0	-	0.127 × AVCC0	V
	AIN12 (G = 8.000)	0.027 × AVCC0	-	0.09 × AVCC0	V
	AIN13 (G = 10.000)	0.025 × AVCC0	-	0.08 × AVCC0	V
	AIN14 (G = 13.333)	0.023 × AVCC0	-	0.06 × AVCC0	V

Table 2.50 PGA characteristics in single mode (2 of 2)

Item	Symbol	Min	Typ	Max	Unit
Gain error	Gerr0 (G = 2.000)	–1.0	-	1.0	%
	Gerr1 (G = 2.500)	–1.0	-	1.0	%
	Gerr2 (G = 2.667)	–1.0	-	1.0	%
	Gerr3 (G = 2.857)	–1.0	-	1.0	%
	Gerr4 (G = 3.077)	–1.0	-	1.0	%
	Gerr5 (G = 3.333)	–1.5	-	1.5	%
	Gerr6 (G = 3.636)	–1.5	-	1.5	%
	Gerr7 (G = 4.000)	–1.5	-	1.5	%
	Gerr8 (G = 4.444)	–2.0	-	2.0	%
	Gerr9 (G = 5.000)	–2.0	-	2.0	%
	Gerr10 (G = 5.714)	–2.0	-	2.0	%
	Gerr11 (G = 6.667)	–2.0	-	2.0	%
	Gerr12 (G = 8.000)	–2.0	-	2.0	%
	Gerr13 (G = 10.000)	–2.0	-	2.0	%
	Gerr14 (G = 13.333)	–2.0	-	2.0	%
Offset error	Voff	–8	-	8	mV

Table 2.51 PGA characteristics in differential mode

Item		Symbol	Min	Typ	Max	Unit
PGAVSS input voltage range		PGAVSS	–0.3	-	0.3	V
Differential input voltage range (G = 1.500)		AIN-PGAVSS	–0.5	-	0.5	V
Input voltage range (G = 2.333)			–0.4	-	0.4	V
Input voltage range (G = 4.000)			–0.2	-	0.2	V
Input voltage range (G = 5.667)			–0.15	-	0.15	V
Gain error	G = 1.500	Gerr	–2.5	-	2.5	%
	G = 2.333		–2	-	2	
	G = 4.000		–1	-	1	
	G = 5.667		–1	-	1	

2.14 Flash Memory Characteristics

2.14.1 Code Flash Memory Characteristics

Table 2.52 Code flash memory characteristics (1 of 2)
Conditions: Program or erase: FCLK = 4 to 60 MHz
Read: FCLK ≤ 60 MHz

Item		Symbol	FCLK = 4 MHz			20 MHz ≤ FCLK ≤ 60 MHz			Unit
			Min	Typ	Max	Min	Typ	Max	
Programming time N_{PEC} ≤ 100 times	256-byte	t_{P256}	-	0.9	13.2	-	0.4	6	ms
	8-KB	t_{P8K}	-	29	176	-	13	80	ms
	32-KB	t_{P32K}	-	116	704	-	52	320	ms
Programming time N_{PEC} > 100 times	256-byte	t_{P256}	-	1.1	15.8	-	0.5	7.2	ms
	8-KB	t_{P8K}	-	35	212	-	16	96	ms
	32-KB	t_{P32K}	-	140	848	-	64	384	ms
Erasure time N_{PEC} ≤ 100 times	8-KB	t_{E8K}	-	71	216	-	39	120	ms
	32-KB	t_{E32K}	-	254	864	-	141	480	ms

Table 2.52 Code flash memory characteristics (2 of 2)
Conditions: Program or erase: FCLK = 4 to 60 MHz
Read: FCLK ≤ 60 MHz

Item		Symbol	FCLK = 4 MHz			20 MHz ≤ FCLK ≤ 60 MHz			Unit
			Min	Typ	Max	Min	Typ	Max	
Erasure time N_{PEC} > 100 times	8-KB	t_{E8K}	-	85	260	-	47	144	ms
	32-KB	t_{E32K}	-	304	1040	-	169	576	ms
Reprogramming/erasure cycle*1		N_{PEC}	1000*2	-	-	1000*2	-	-	Times
Suspend delay during programming		t_{SPD}	-	-	264	-	-	120	μs
First suspend delay during erasure in suspend priority mode		t_{SESD1}	-	-	216	-	-	120	μs
Second suspend delay during erasure in suspend priority mode		t_{SESD2}	-	-	1.7	-	-	1.7	ms
Suspend delay during erasure in erasure priority mode		t_{SEED}	-	-	1.7	-	-	1.7	ms
Forced stop command		t_{FD}	-	-	32	-	-	20	μs
Data hold time*3*4		t_{DRP}	20	-	-	20	-	-	Years

Note 1. The reprogram/erase cycle is the number of erasures for each block. When the reprogram/erase cycle is n times (n = 1,000), erasing can be performed n times for each block. For example, when 256-byte programming is performed 32 times for different addresses in 8-KB blocks, and then the entire block is erased, the reprogram/erase cycle is counted as one. However, programming the same address several times as one erasure is not enabled. (Overwriting is prohibited.)

Note 2. This is the minimum number of times to guarantee all the characteristics after reprogramming. The guaranteed range is from 1 to the minimum value.

Note 3. This indicates the characteristics when reprogramming is performed within the specified range, including the minimum value.

Note 4. This result is obtained from reliability testing.

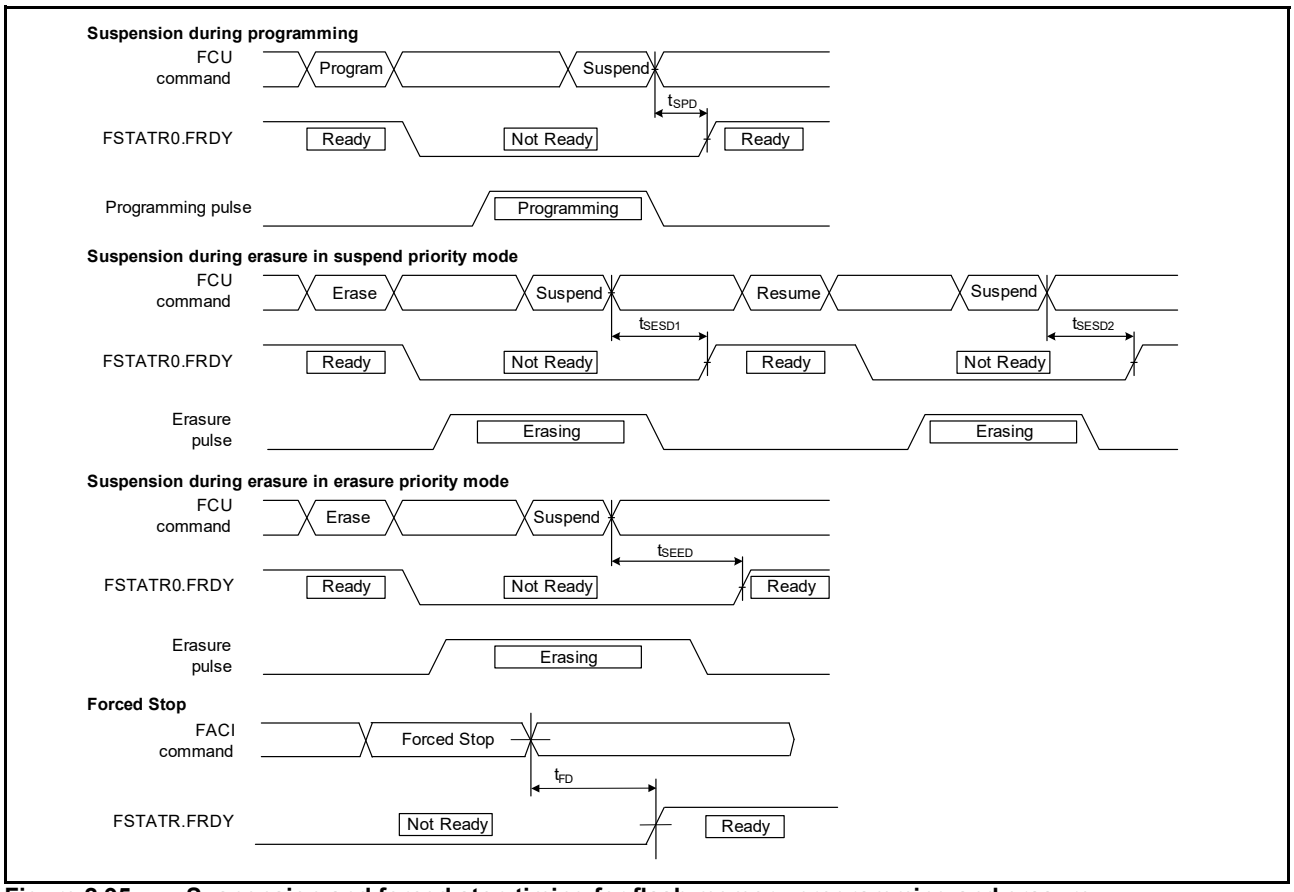

Figure 2.95 Suspension and forced stop timing for flash memory programming and erasure

2.14.2 Data Flash Memory Characteristics

Table 2.53 Data flash memory characteristics
Conditions: Program or erase: FCLK = 4 to 60 MHz
Read: FCLK ≤ 60 MHz

Item		Symbol	FCLK = 4 MHz			20 MHz ≤ FCLK ≤ 60 MHz			Unit
			Min	Typ	Max	Min	Typ	Max	
Programming time	4-byte	t_{DP4}	-	0.36	3.8	-	0.16	1.7	ms
Erasure time	64-byte	t_{DE64}	-	3.1	18	-	1.7	10	ms
Blank check time	4-byte	t_{DBC4}	-	-	84	-	-	30	μs
Reprogramming/erasure cycle*1		N_{DPEC}	125000*2	-	-	125000*2	-	-	-
Suspend delay during programming		t_{DSPD}	-	-	264	-	-	120	μs
First suspend delay during erasure in suspend priority mode		t_{DSESD1}	-	-	216	-	-	120	μs
Second suspend delay during erasure in suspend priority mode		t_{DSESD2}	-	-	300	-	-	300	μs
Suspend delay during erasing in erasure priority mode		t_{DSEED}	-	-	300	-	-	300	μs
Forced stop command		t_{FD}	-	-	32	-	-	20	μs
Data hold time*3 *4		t_{DDRP}	20	-	-	20	-	-	Year

Note 1. The reprogram/erase cycle is the number of erasures for each block. When the reprogram/erase cycle is n times (n = 125,000), erasing can be performed n times for each block. For example, when 4-byte programming is performed 16 times for different addresses in 64-byte blocks, and then the entire block is erased, the reprogram/erase cycle is counted as one. However, programming the same address several times as one erasure is not enabled. (Overwriting is prohibited.)

Note 2. This is the minimum number of times to guarantee all the characteristics after reprogramming. The guaranteed range is from 1 to the minimum value.

Note 3. This indicates the characteristics when reprogramming is performed within the specified range, including the minimum value.

Note 4. This result is obtained from reliability testing.

2.15 Boundary Scan

Table 2.54 Boundary scan characteristics

Item	Symbol	Min	Typ	Max	Unit	Test conditions
TCK clock cycle time	t_{TCKcyc}	100	-	-	ns	Figure 2.96
TCK clock high pulse width	t_{TCKH}	45	-	-	ns	
TCK clock low pulse width	t_{TCKL}	45	-	-	ns	
TCK clock rise time	t_{TCKr}	-	-	5	ns	
TCK clock fall time	t_{TCKf}	-	-	5	ns	
TMS setup time	t_{TMSS}	20	-	-	ns	Figure 2.97
TMS hold time	t_{TMSH}	20	-	-	ns	
TDI setup time	t_{TDIS}	20	-	-	ns	
TDI hold time	t_{TDIH}	20	-	-	ns	
TDO data delay	t_{TDOD}	-	-	40	ns	
Boundary scan circuit startup time*1	T_{BSSTUP}	t_{RESWP}	-	-	-	Figure 2.98

Note 1. Boundary scan does not function until the power-on reset becomes negative.

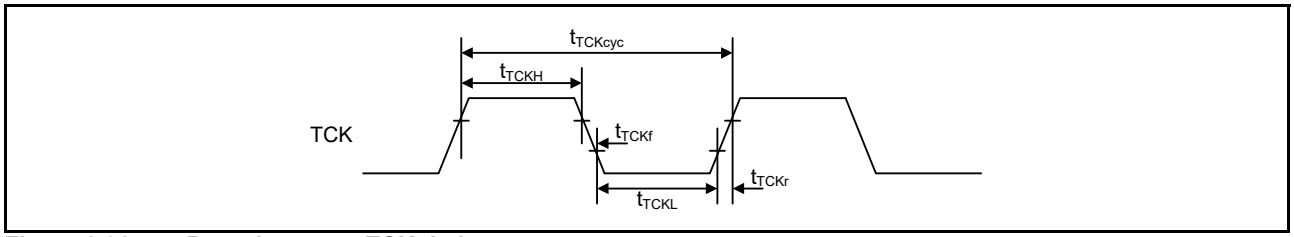

Figure 2.96 Boundary scan TCK timing

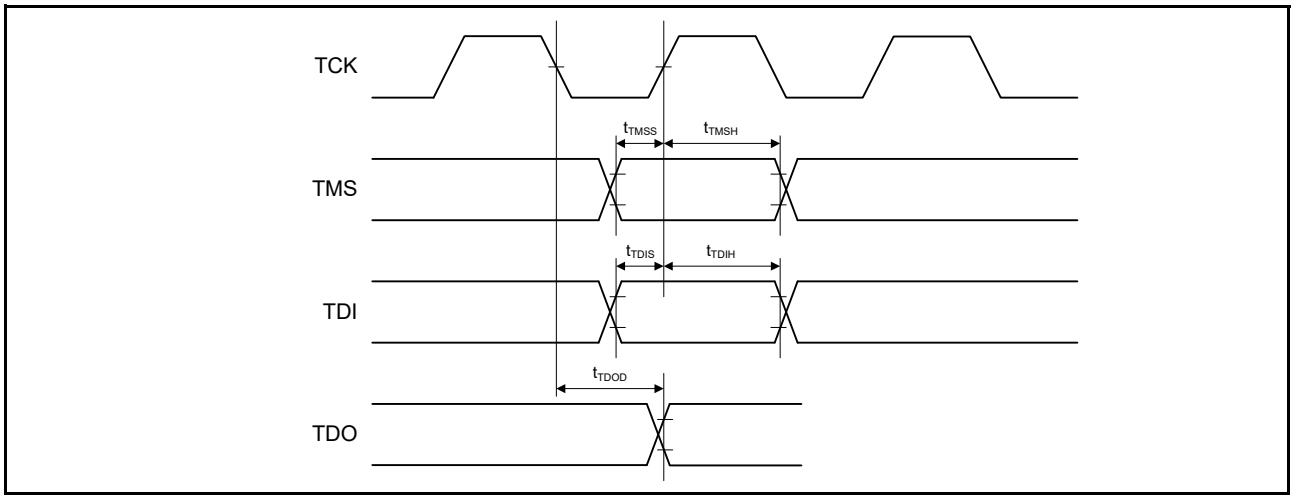

Figure 2.97 Boundary scan input/output timing

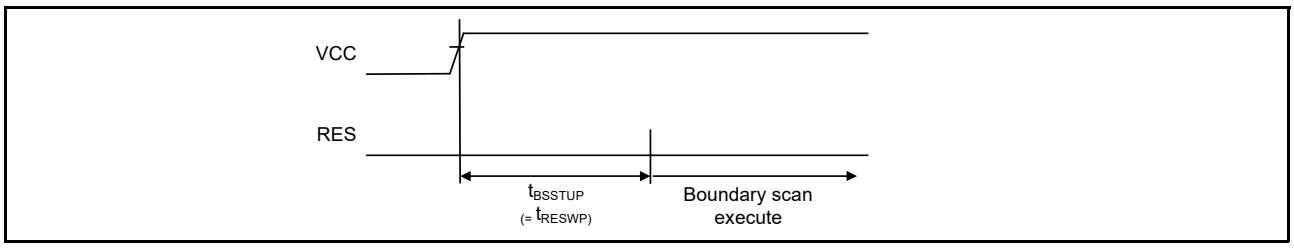

Figure 2.98 Boundary scan circuit startup timing

2.16 Joint Test Action Group (JTAG)

Table 2.55 JTAG

Item	Symbol	Min	Typ	Max	Unit	Test conditions
TCK clock cycle time	t_{TCKcyc}	40	-	-	ns	Figure 2.96
TCK clock high pulse width	t_{TCKH}	15	-	-	ns	
TCK clock low pulse width	t_{TCKL}	15	-	-	ns	
TCK clock rise time	t_{TCKr}	-	-	5	ns	
TCK clock fall time	t_{TCKf}	-	-	5	ns	
TMS setup time	t_{TMSS}	8	-	-	ns	Figure 2.97
TMS hold time	t_{TMSH}	8	-	-	ns	
TDI setup time	t_{TDIS}	8	-	-	ns	
TDI hold time	t_{TDIH}	8	-	-	ns	
TDO data delay time	t_{TDOD}	-	-	28	ns	

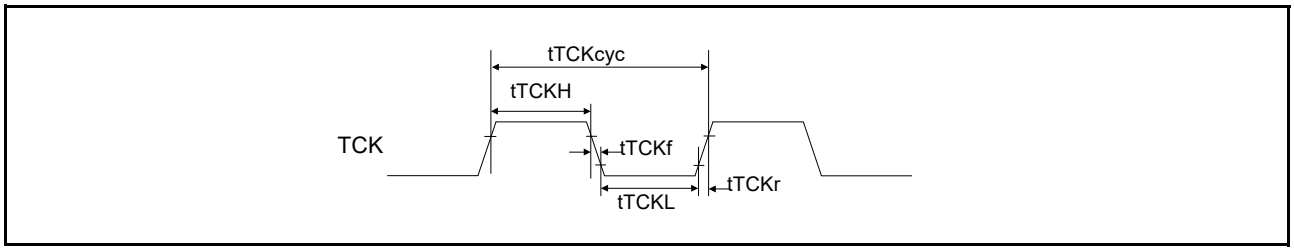

Figure 2.99 JTAG TCK timing

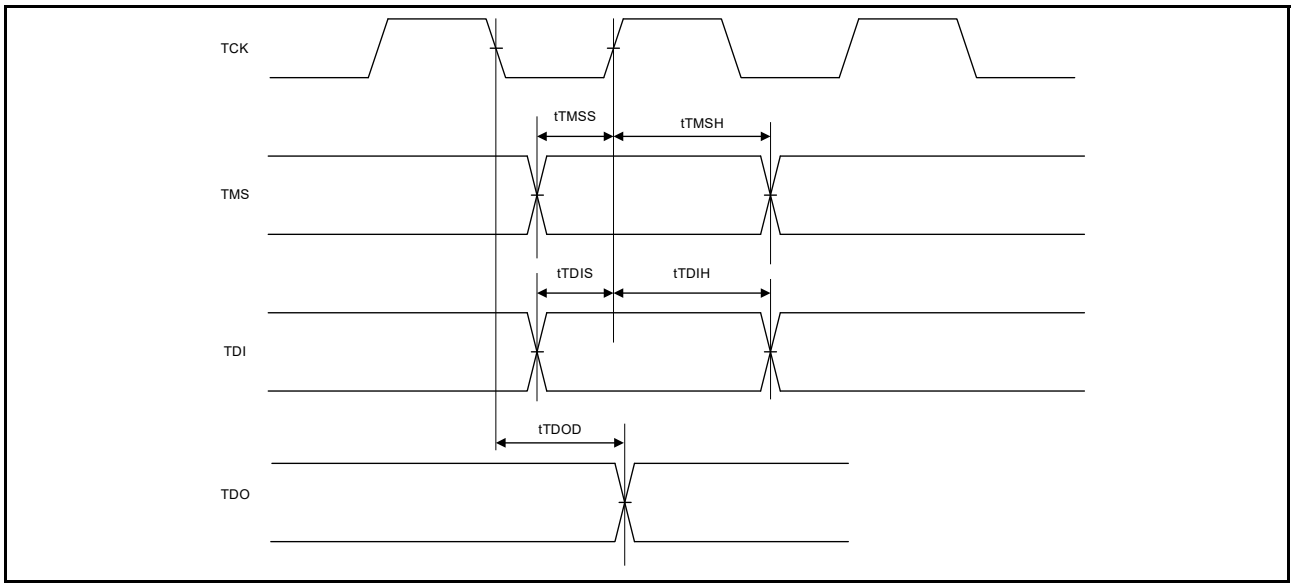

Figure 2.100 JTAG input/output timing

2.17 Serial Wire Debug (SWD)

Table 2.56 SWD

Item	Symbol	Min	Typ	Max	Unit	Test conditions
SWCLK clock cycle time	$t_{SWCKcyc}$	40	-	-	ns	Figure 2.101
SWCLK clock high pulse width	t_{SWCKH}	15	-	-	ns	
SWCLK clock low pulse width	t_{SWCKL}	15	-	-	ns	
SWCLK clock rise time	t_{SWCKr}	-	-	5	ns	
SWCLK clock fall time	t_{SWCKf}	-	-	5	ns	
SWDIO setup time	t_{SWDS}	8	-	-	ns	Figure 2.102
SWDIO hold time	t_{SWDH}	8	-	-	ns	
SWDIO data delay time	t_{SWDD}	2	-	28	ns	

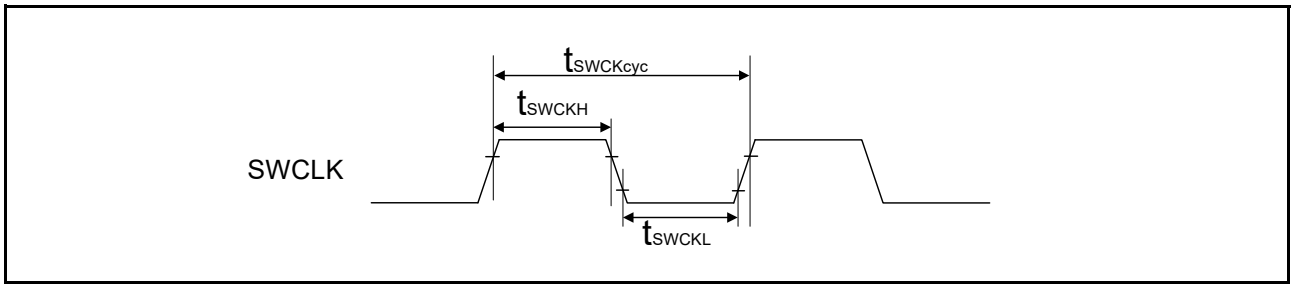

Figure 2.101 SWD SWCLK timing

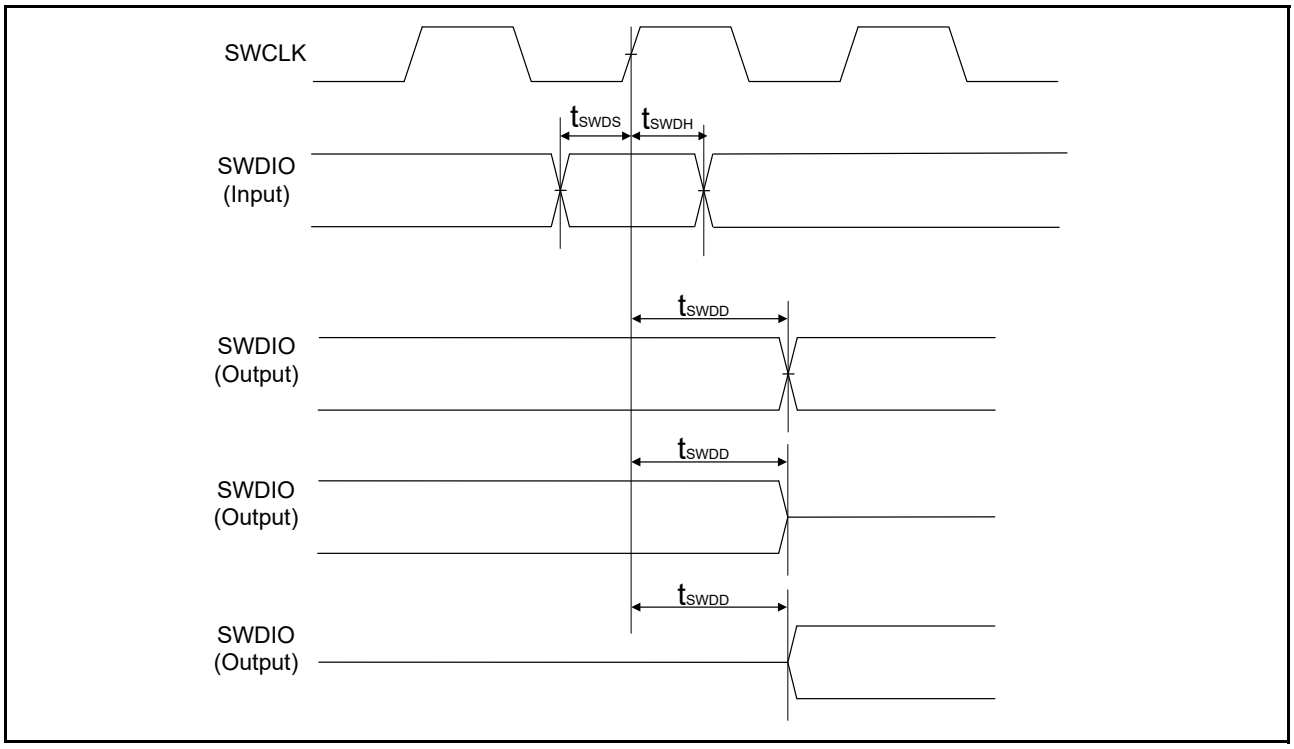

Figure 2.102 SWD input/output timing

2.18 Embedded Trace Macro Interface (ETM)

Table 2.57 ETM

Item	Symbol	Min	Typ	Max	Unit	Test conditions
TCLK clock cycle time	$t_{TCLKcyc}$	16.6	-	-	ns	Figure 2.103
TCLK clock high pulse width	t_{TCLKH}	5.8	-	-	ns	
TCLK clock low pulse width	t_{TCLKL}	5.8	-	-	ns	
TCLK clock rise time	t_{TCLKr}	-	-	2.5	ns	
TCLK clock fall time	t_{TCLKf}	-	-	2.5	ns	
TDATA0-3 output setup time	t_{TRDS}	1.6	-	-	ns	Figure 2.104
TDATA0-3 output hold time	t_{TRDH}	1.6	-	-	ns	

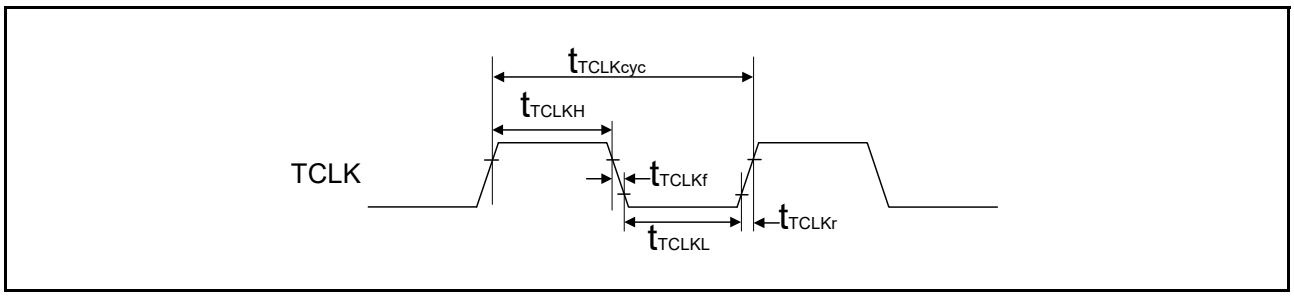

Figure 2.103 ETM TCLK timing

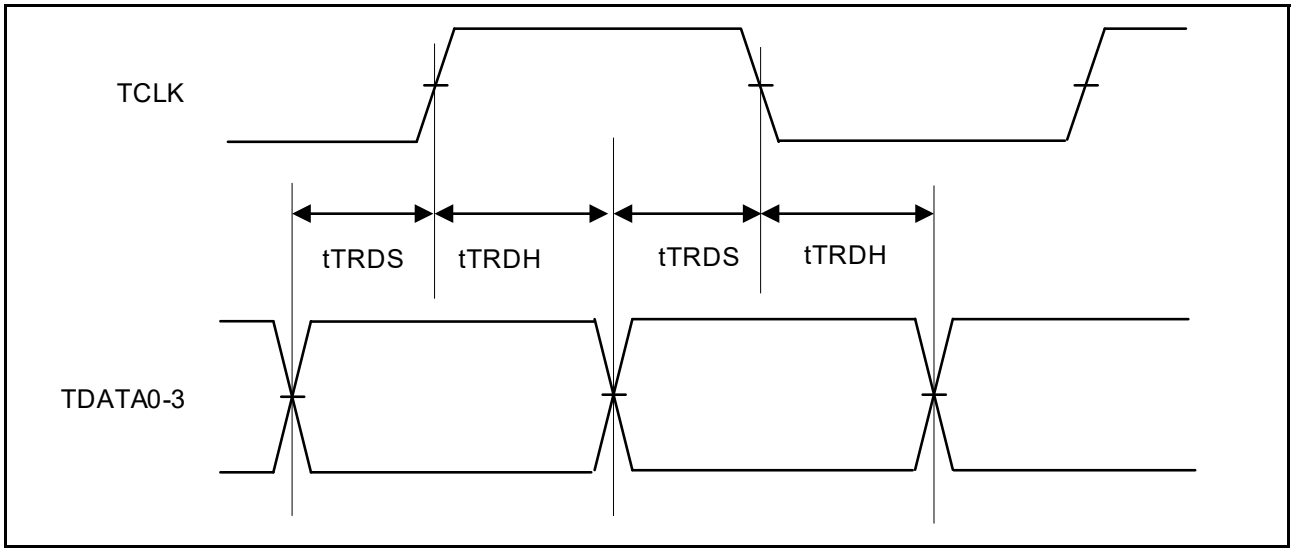

Figure 2.104 ETM output timing

Appendix 1. Package Dimensions

For information on the latest version of the package dimensions or mountings, go to “Packages” on the Renesas Electronics Corporation website.

JEITA Package Code	RENESAS Code	Previous Code	MASS (Typ) [g]
P-LFBGA224-13x13-0.80	PLBG0224GA-A	224FHE	0.4

Unit: mm

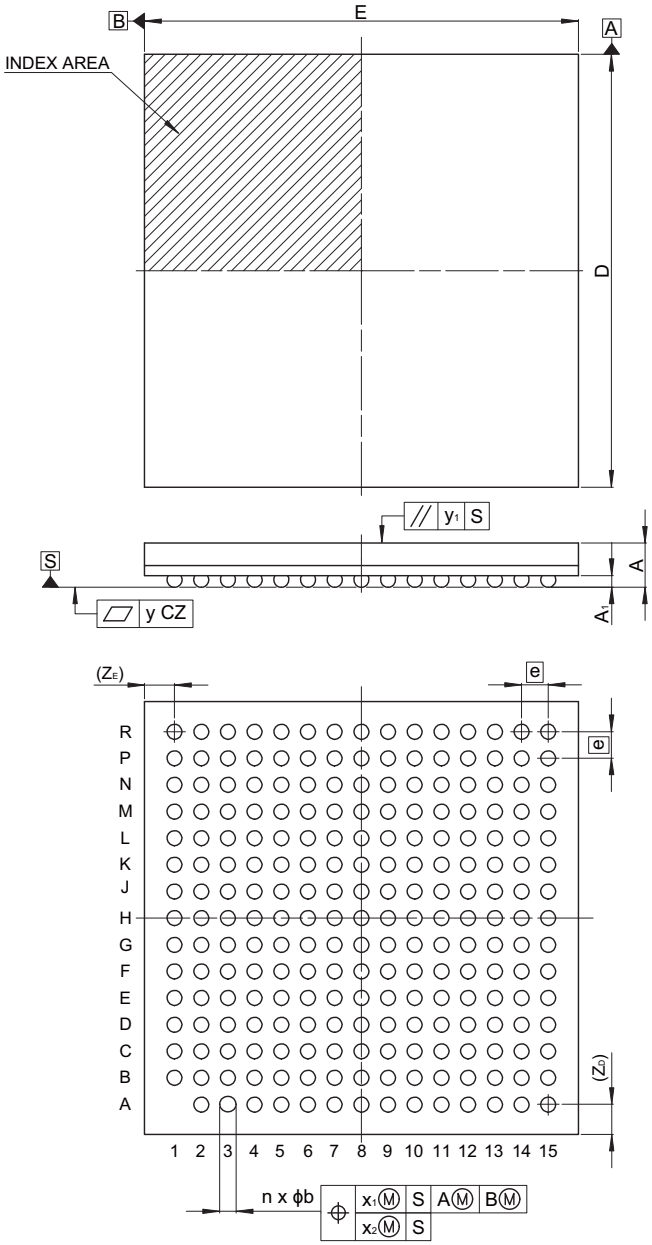

Reference Symbol	Dimensions in millimeters		
	Min	Nom	Max
D	12.9	13.0	13.1
E	12.9	13.0	13.1
A	—	—	1.40
A_1	0.30	0.35	0.40
e	—	0.80	—
b	0.40	0.45	0.50
x_1	—	—	0.15
x_2	—	—	0.08
y	—	—	0.10
y_1	—	—	0.20
n	—	224	—
Z_D	—	0.90	—
Z_E	—	0.90	—

© 2016 Renesas Electronics Corporation. All rights reserved.

Figure 1.1 224-pin BGA

JEITA Package Code	RENESAS Code	Previous Code	MASS (TYP.)
P-LFBGA176-13x13-0.80	PLBG0176GE-A	176FHS-A	0.45 g

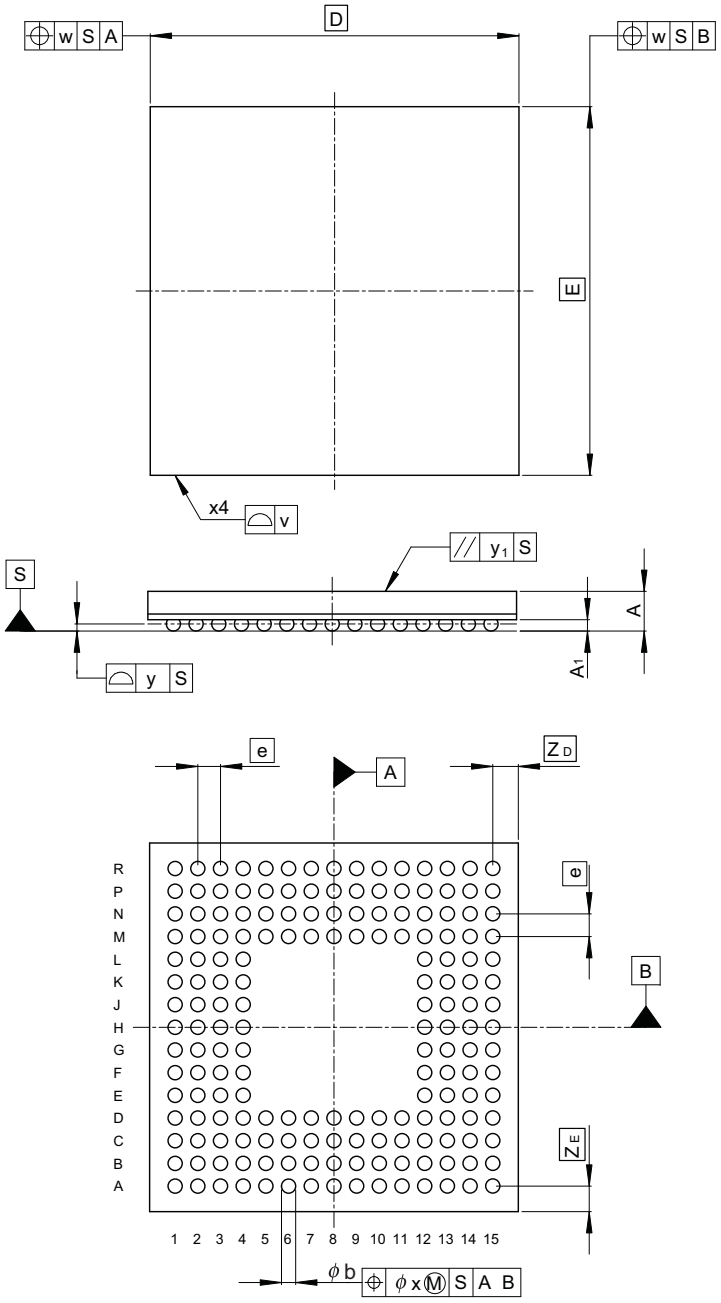

Reference Symbol	Dimension in Millimeters		
	Min	Nom	Max
D	—	13.0	—
E	—	13.0	—
v	—	—	0.15
w	—	—	0.20
A	—	—	1.40
A_1	0.35	0.40	0.45
e	—	0.80	—
b	0.45	0.50	0.55
x	—	—	0.08
y	—	—	0.10
y_1	—	—	0.2
S_D	—	—	—
S_E	—	—	—
Z_D	—	0.90	—
Z_E	—	0.90	—

Figure 1.2 176-pin BGA

JEITA Package Code	RENESAS Code	Previous Code	MASS[Typ.]
P-LFQFP176-24x24-0.50	PLQP0176KB-A	176P6Q-A/FP-176E/FP-176EV	1.8g

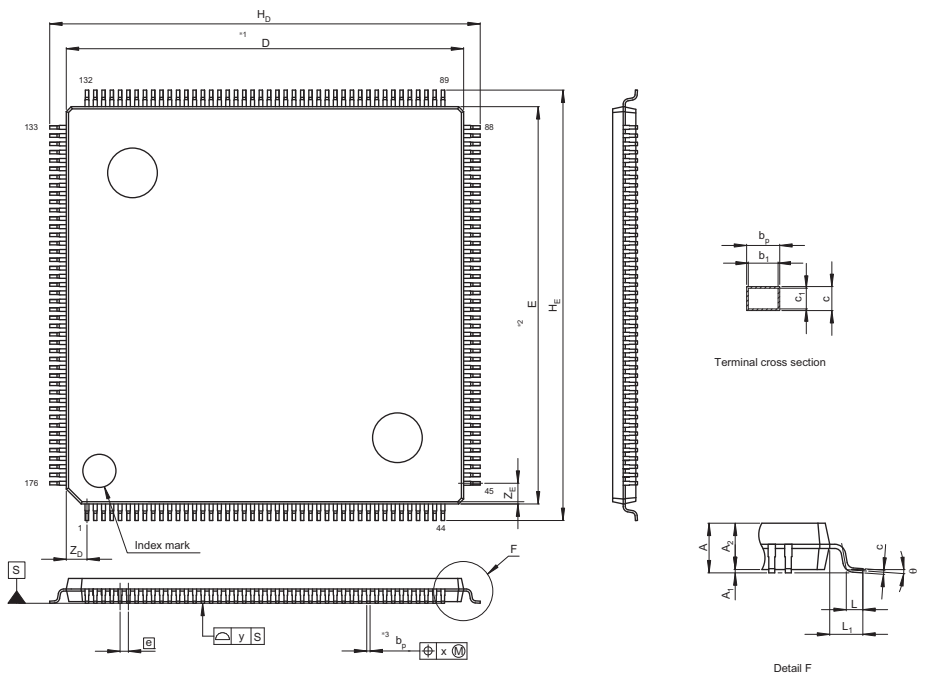

NOTE)
1. DIMENSIONS "*1" AND "*2" DO NOT INCLUDE MOLD FLASH.
2. DIMENSION "*3" DOES NOT INCLUDE TRIM OFFSET.

Reference Symbol	Dimension in Millimeters		
	Min	Nom	Max
D	23.9	24.0	24.1
E	23.9	24.0	24.1
A_2	—	1.4	—
H_D	25.8	26.0	26.2
H_E	25.8	26.0	26.2
A	—	—	1.7
A_1	0.05	0.1	0.15
b_p	0.15	0.20	0.25
b_1	—	0.18	—
c	0.09	0.145	0.20
c_1	—	0.125	—
θ	0°	—	8°
e	—	0.5	—
x	—	—	0.08
y	—	—	0.10
Z_D	—	1.25	—
Z_E	—	1.25	—
L	0.35	0.5	0.65
L_1	—	1.0	—

Figure 1.3 176-pin LQFP

JEITA Package Code	RENESAS Code	Previous Code	MASS[Typ.]
P-TFLGA145-7x7-0.50	PTLG0145KA-A	145F0G	0.1g

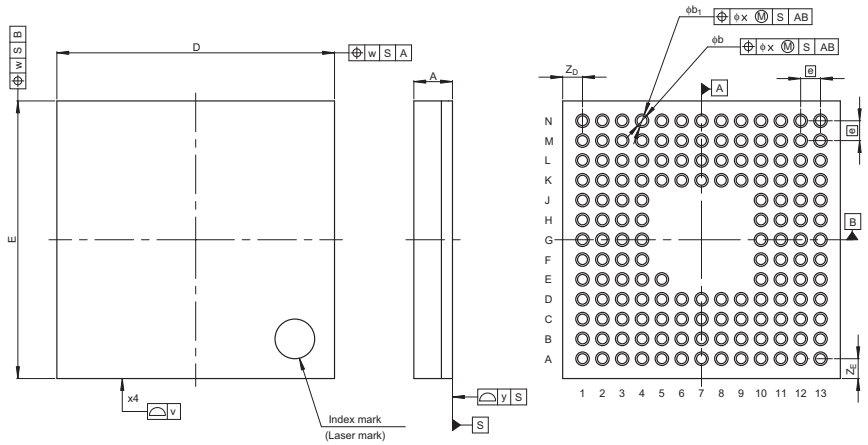

Reference Symbol	Dimension in Millimeters		
	Min	Nom	Max
D	—	7.0	—
E	—	7.0	—
v	—	—	0.15
w	—	—	0.20
A	—	—	1.05
e	—	0.5	—
b	0.21	0.25	0.29
b_1	0.29	0.34	0.39
x	—	—	0.08
y	—	—	0.08
Z_D	—	0.5	—
Z_E	—	0.5	—

Figure 1.4 145-pin LGA

JEITA Package Code	RENESAS Code	Previous Code	MASS (Typ) [g]
P-LFQFP144-20x20-0.50	PLQP0144KA-B	—	1.2

Unit: mm

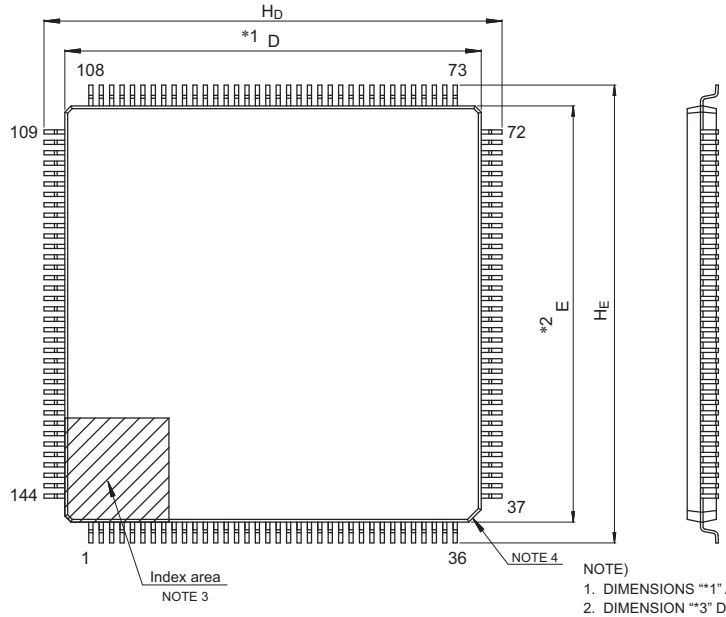

NOTE)
1. DIMENSIONS "*1" AND "*2" DO NOT INCLUDE MOLD FLASH.
2. DIMENSION "*3" DOES NOT INCLUDE TRIM OFFSET.
3. PIN 1 VISUAL INDEX FEATURE MAY VARY, BUT MUST BE LOCATED WITHIN THE HATCHED AREA.
4. CHAMFERS AT CORNERS ARE OPTIONAL, SIZE MAY VARY.

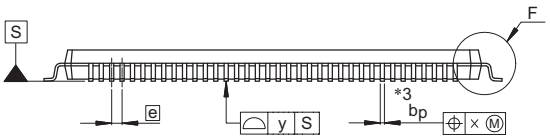

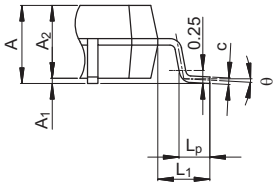

Detail F

Reference Symbol	Dimensions in millimeters		
	Min	Nom	Max
D	19.9	20.0	20.1
E	19.9	20.0	20.1
A_2	—	1.4	—
H_D	21.8	22.0	22.2
H_E	21.8	22.0	22.2
A	—	—	1.7
A_1	0.05	—	0.15
b_p	0.17	0.20	0.27
c	0.09	—	0.20
θ	0°	3.5°	8°
e	—	0.5	—
x	—	—	0.08
y	—	—	0.10
L_p	0.45	0.6	0.75
L_1	—	1.0	—

© 2016 Renesas Electronics Corporation. All rights reserved.

Figure 1.5 144-pin LQFP

JEITA Package Code	RENESAS Code	Previous Code	MASS (Typ) [g]
P-LFQFP100-14x14-0.50	PLQP0100KB-B	—	0.6

Unit: mm

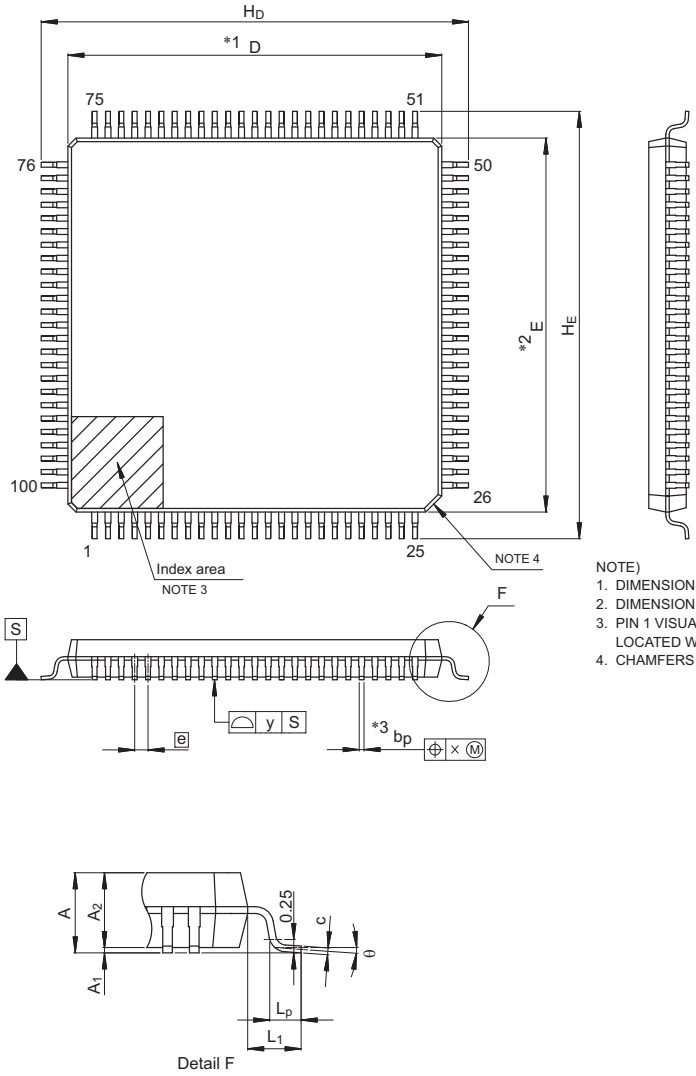

NOTE)
1. DIMENSIONS "*1" AND "*2" DO NOT INCLUDE MOLD FLASH.
2. DIMENSION "*3" DOES NOT INCLUDE TRIM OFFSET.
3. PIN 1 VISUAL INDEX FEATURE MAY VARY, BUT MUST BE LOCATED WITHIN THE HATCHED AREA.
4. CHAMFERS AT CORNERS ARE OPTIONAL, SIZE MAY VARY.

Reference Symbol	Dimensions in millimeters		
	Min	Nom	Max
D	13.9	14.0	14.1
E	13.9	14.0	14.1
A_2	—	1.4	—
H_D	15.8	16.0	16.2
H_E	15.8	16.0	16.2
A	—	—	1.7
A_1	0.05	—	0.15
b_p	0.15	0.20	0.27
c	0.09	—	0.20
θ	0°	3.5°	8°
e	—	0.5	—
x	—	—	0.08
y	—	—	0.08
L_p	0.45	0.6	0.75
L_1	—	1.0	—

© 2015 Renesas Electronics Corporation. All rights reserved.

Figure 1.6 100-pin LQFP

Revision History	S7G2 Microcontroller Group Datasheet

Rev.	Date	Summary
1.00	Feb 23, 2016	1st release
1.30	Jan 3, 2018	Updated for 1.30
1.40	Aug, 2018	Updated for 1.40

Website and Support

Visit the following vanity URLs to learn about key elements of the Synergy Platform, download components and related documentation, and get support.

Synergy Software	renesassynergy.com/software
Synergy Software Package	renesassynergy.com/ssp
Software add-ons	renesassynergy.com/addons
Software glossary	renesassynergy.com/softwareglossary
Development tools	renesassynergy.com/tools
Synergy Hardware	renesassynergy.com/hardware
Microcontrollers	renesassynergy.com/mcus
MCU glossary	renesassynergy.com/mcuglossary
Parametric search	renesassynergy.com/parametric
Kits	renesassynergy.com/kits
Synergy Solutions Gallery	renesassynergy.com/solutionsgallery
Partner projects	renesassynergy.com/partnerprojects
Application projects	renesassynergy.com/applicationprojects
Self-service support resources:	
Documentation	renesassynergy.com/docs
Knowledgebase	renesassynergy.com/knowledgebase
Forums	renesassynergy.com/forum
Training	renesassynergy.com/training
Videos	renesassynergy.com/videos
Chat and web ticket	renesassynergy.com/support

Proprietary Notice

All text, graphics, photographs, trademarks, logos, artwork and computer code, collectively known as content, contained in this document is owned, controlled or licensed by or to Renesas, and is protected by trade dress, copyright, patent and trademark laws, and other intellectual property rights and unfair competition laws. Except as expressly provided herein, no part of this document or content may be copied, reproduced, republished, posted, publicly displayed, encoded, translated, transmitted or distributed in any other medium for publication or distribution or for any commercial enterprise, without prior written consent from Renesas.

Arm® and Cortex® are registered trademarks of Arm Limited. CoreSight™ is a trademark of Arm Limited.

CoreMark® is a registered trademark of the Embedded Microprocessor Benchmark Consortium.

Magic Packet™ is a trademark of Advanced Micro Devices, Inc.

SuperFlash® is a registered trademark of Silicon Storage Technology, Inc. in several countries including the United States and Japan.

Other brands and names mentioned in this document may be the trademarks or registered trademarks of their respective holders.

S7G2 Microcontroller Group Datasheet

Publication Date: Rev.1.40 Aug 6, 2018

Published by: Renesas Electronics Corporation

General Precautions

1. Precaution against Electrostatic Discharge (ESD)

   A strong electrical field, when exposed to a CMOS device, can cause destruction of the gate oxide and ultimately degrade the device operation. Steps must be taken to stop the generation of static electricity as much as possible, and quickly dissipate it when it occurs. Environmental control must be adequate. When it is dry, a humidifier should be used. This is recommended to avoid using insulators that can easily build up static electricity. Semiconductor devices must be stored and transported in an anti-static container, static shielding bag or conductive material. All test and measurement tools including work benches and floors must be grounded. The operator must also be grounded using a wrist strap. Semiconductor devices must not be touched with bare hands. Similar precautions must be taken for printed circuit boards with mounted semiconductor devices.

2. Processing at power-on

   The state of the product is undefined at the time when power is supplied. The states of internal circuits in the LSI are indeterminate and the states of register settings and pins are undefined at the time when power is supplied. In a finished product where the reset signal is applied to the external reset pin, the states of pins are not guaranteed from the time when power is supplied until the reset process is completed. In a similar way, the states of pins in a product that is reset by an on-chip power-on reset function are not guaranteed from the time when power is supplied until the power reaches the level at which resetting is specified.

3. Input of signal during power-off state

   Do not input signals or an I/O pull-up power supply while the device is powered off. The current injection that results from input of such a signal or I/O pull-up power supply may cause malfunction and the abnormal current that passes in the device at this time may cause degradation of internal elements. Follow the guideline for input signal during power-off state as described in your product documentation.

4. Handling of unused pins

   Handle unused pins in accordance with the directions given under handling of unused pins in the manual. The input pins of CMOS products are generally in the high-impedance state. In operation with an unused pin in the open-circuit state, extra electromagnetic noise is induced in the vicinity of the LSI, an associated shoot-through current flows internally, and malfunctions occur due to the false recognition of the pin state as an input signal become possible.

5. Clock signals

   After applying a reset, only release the reset line after the operating clock signal becomes stable. When switching the clock signal during program execution, wait until the target clock signal is stabilized. When the clock signal is generated with an external resonator or from an external oscillator during a reset, ensure that the reset line is only released after full stabilization of the clock signal. Additionally, when switching to a clock signal produced with an external resonator or by an external oscillator while program execution is in progress, wait until the target clock signal is stable.

6. Voltage application waveform at input pin

   Waveform distortion due to input noise or a reflected wave may cause malfunction. If the input of the CMOS device stays in the area between V_{IL} (Max.) and V_{IH} (Min.) due to noise, for example, the device may malfunction. Take care to prevent chattering noise from entering the device when the input level is fixed, and also in the transition period when the input level passes through the area between V_{IL} (Max.) and V_{IH} (Min.).

7. Prohibition of access to reserved addresses

   Access to reserved addresses is prohibited. The reserved addresses are provided for possible future expansion of functions. Do not access these addresses as the correct operation of the LSI is not guaranteed.

8. Differences between products

   Before changing from one product to another, for example to a product with a different part number, confirm that the change will not lead to problems. The characteristics of a microprocessing unit or microcontroller unit products in the same group but having a different part number might differ in terms of internal memory capacity, layout pattern, and other factors, which can affect the ranges of electrical characteristics, such as characteristic values, operating margins, immunity to noise, and amount of radiated noise. When changing to a product with a different part number, implement a system-evaluation test for the given product.

Notice

1. Descriptions of circuits, software and other related information in this document are provided only to illustrate the operation of semiconductor products and application examples. You are fully responsible for the incorporation or any other use of the circuits, software, and information in the design of your product or system. Renesas Electronics disclaims any and all liability for any losses and damages incurred by you or third parties arising from the use of these circuits, software, or information.
2. Renesas Electronics hereby expressly disclaims any warranties against and liability for infringement or any other claims involving patents, copyrights, or other intellectual property rights of third parties, by or arising from the use of Renesas Electronics products or technical information described in this document, including but not limited to, the product data, drawings, charts, programs, algorithms, and application examples.
3. No license, express, implied or otherwise, is granted hereby under any patents, copyrights or other intellectual property rights of Renesas Electronics or others.
4. You shall not alter, modify, copy, or reverse engineer any Renesas Electronics product, whether in whole or in part. Renesas Electronics disclaims any and all liability for any losses or damages incurred by you or third parties arising from such alteration, modification, copying or reverse engineering.
5. Renesas Electronics products are classified according to the following two quality grades: “Standard” and “High Quality”. The intended applications for each Renesas Electronics product depends on the product’s quality grade, as indicated below.
   "Standard": Computers; office equipment; communications equipment; test and measurement equipment; audio and visual equipment; home electronic appliances; machine tools; personal electronic equipment; industrial robots; etc.
   "High Quality": Transportation equipment (automobiles, trains, ships, etc.); traffic control (traffic lights); large-scale communication equipment; key financial terminal systems; safety control equipment; etc.
   Unless expressly designated as a high reliability product or a product for harsh environments in a Renesas Electronics data sheet or other Renesas Electronics document, Renesas Electronics products are not intended or authorized for use in products or systems that may pose a direct threat to human life or bodily injury (artificial life support devices or systems; surgical implantations; etc.), or may cause serious property damage (space system; undersea repeaters; nuclear power control systems; aircraft control systems; key plant systems; military equipment; etc.). Renesas Electronics disclaims any and all liability for any damages or losses incurred by you or any third parties arising from the use of any Renesas Electronics product that is inconsistent with any Renesas Electronics data sheet, user’s manual or other Renesas Electronics document.
6. When using Renesas Electronics products, refer to the latest product information (data sheets, user’s manuals, application notes, “General Notes for Handling and Using Semiconductor Devices” in the reliability handbook, etc.), and ensure that usage conditions are within the ranges specified by Renesas Electronics with respect to maximum ratings, operating power supply voltage range, heat dissipation characteristics, installation, etc. Renesas Electronics disclaims any and all liability for any malfunctions, failure or accident arising out of the use of Renesas Electronics products outside of such specified ranges.
7. Although Renesas Electronics endeavors to improve the quality and reliability of Renesas Electronics products, semiconductor products have specific characteristics, such as the occurrence of failure at a certain rate and malfunctions under certain use conditions. Unless designated as a high reliability product or a product for harsh environments in a Renesas Electronics data sheet or other Renesas Electronics document, Renesas Electronics products are not subject to radiation resistance design. You are responsible for implementing safety measures to guard against the possibility of bodily injury, injury or damage caused by fire, and/or danger to the public in the event of a failure or malfunction of Renesas Electronics products, such as safety design for hardware and software, including but not limited to redundancy, fire control and malfunction prevention, appropriate treatment for aging degradation or any other appropriate measures. Because the evaluation of microcomputer software alone is very difficult and impractical, you are responsible for evaluating the safety of the final products or systems manufactured by you.
8. Please contact a Renesas Electronics sales office for details as to environmental matters such as the environmental compatibility of each Renesas Electronics product. You are responsible for carefully and sufficiently investigating applicable laws and regulations that regulate the inclusion or use of controlled substances, including without limitation, the EU RoHS Directive, and using Renesas Electronics products in compliance with all these applicable laws and regulations. Renesas Electronics disclaims any and all liability for damages or losses occurring as a result of your noncompliance with applicable laws and regulations.
9. Renesas Electronics products and technologies shall not be used for or incorporated into any products or systems whose manufacture, use, or sale is prohibited under any applicable domestic or foreign laws or regulations. You shall comply with any applicable export control laws and regulations promulgated and administered by the governments of any countries asserting jurisdiction over the parties or transactions.
10. It is the responsibility of the buyer or distributor of Renesas Electronics products, or any other party who distributes, disposes of, or otherwise sells or transfers the product to a third party, to notify such third party in advance of the contents and conditions set forth in this document.
11. This document shall not be reprinted, reproduced or duplicated in any form, in whole or in part, without prior written consent of Renesas Electronics.
12. Please contact a Renesas Electronics sales office if you have any questions regarding the information contained in this document or Renesas Electronics products.

(Note 1) “Renesas Electronics” as used in this document means Renesas Electronics Corporation and also includes its directly or indirectly controlled subsidiaries.

(Note 2) “Renesas Electronics product(s)” means any product developed or manufactured by or for Renesas Electronics.

(Rev.4.0-1 November 2017)

SALES OFFICES Renesas Electronics Corporation http://www.renesas.com

Refer to "http://www.renesas.com/" for the latest and detailed information.

Renesas Electronics America Inc.
1001 Murphy Ranch Road, Milpitas, CA 95035, U.S.A.
Tel: +1-408-432-8888, Fax: +1-408-434-5351

Renesas Electronics Canada Limited
9251 Yonge Street, Suite 8309 Richmond Hill, Ontario Canada L4C 9T3
Tel: +1-905-237-2004

Renesas Electronics Europe Limited
Dukes Meadow, Millboard Road, Bourne End, Buckinghamshire, SL8 5FH, U.K
Tel: +44-1628-651-700

Renesas Electronics Europe GmbH
Arcadiastrasse 10, 40472 Düsseldorf, Germany
Tel: +49-211-6503-0, Fax: +49-211-6503-1327

Renesas Electronics (China) Co., Ltd.
Room 1709 Quantum Plaza, No.27 ZhichunLu, Haidian District, Beijing, 100191 P. R. China
Tel: +86-10-8235-1155, Fax: +86-10-8235-7679

Renesas Electronics (Shanghai) Co., Ltd.
Unit 301, Tower A, Central Towers, 555 Langao Road, Putuo District, Shanghai, 200333 P. R. China
Tel: +86-21-2226-0888, Fax: +86-21-2226-0999

Renesas Electronics Hong Kong Limited
Unit 1601-1611, 16/F., Tower 2, Grand Century Place, 193 Prince Edward Road West, Mongkok, Kowloon, Hong Kong
Tel: +852-2265-6688, Fax: +852 2886-9022

Renesas Electronics Taiwan Co., Ltd.
13F, No. 363, Fu Shing North Road, Taipei 10543, Taiwan
Tel: +886-2-8175-9600, Fax: +886 2-8175-9670

Renesas Electronics Singapore Pte. Ltd.
80 Bendemeer Road, Unit #06-02 Hyflux Innovation Centre, Singapore 339949
Tel: +65-6213-0200, Fax: +65-6213-0300

Renesas Electronics Malaysia Sdn.Bhd.
Unit 1207, Block B, Menara Amcorp, Amcorp Trade Centre, No. 18, Jln Persiaran Barat, 46050 Petaling Jaya, Selangor Darul Ehsan, Malaysia
Tel: +60-3-7955-9390, Fax: +60-3-7955-9510

Renesas Electronics India Pvt. Ltd.
No.777C, 100 Feet Road, HAL 2nd Stage, Indiranagar, Bangalore 560 038, India
Tel: +91-80-67208700, Fax: +91-80-67208777

Renesas Electronics Korea Co., Ltd.
17F, KAMCO Yangjae Tower, 262, Gangnam-daero, Gangnam-gu, Seoul, 06265 Korea
Tel: +82-2-558-3737, Fax: +82-2-558-5338

© 2018 Renesas Electronics Corporation. All rights reserved.

Colophon 7.1

Renesas Synergy™ Platform
S7G2 Microcontroller Group

Renesas Electronics Corporation

R01DS0262EU0140

Looking for pricing, stock, or lifecycle information?

Click below to explore more details on WIN SOURCE:

- View R7FS7G27H2A01CLK#AC0 on WIN SOURCE
- Renesas Electronics America Information

Optimize Your Supply Chain with WIN SOURCE Solutions

- Global Sourcing Solution
- Obsolete Management
- Cost Control Management
- Shortage Management
- Alternative Solution
- Excess Inventory Management