THE DATASHEET OF

DDTA114YE-7-F

www.win-source.net 0086-755-83957316

PNP PRE-BIASED SMALL SIGNAL SURFACE MOUNT TRANSISTOR

Features

- Epitaxial Planar Die Construction
- Complementary NPN Types Available (DDTC)
- Built-In Biasing Resistors, R1≠R2
- **Totally Lead-Free & Fully RoHS Compliant (Notes 1 & 2)**
- **Halogen and Antimony Free "Green" Device (Note 3)**
- **Qualified to AEC-Q101 Standards for High Reliability**

Mechanical Data

- Case: SOT523
- Case Material: Molded Plastic, "Green" Molding Compound
- UL Flammability Classification Rating 94V-0
- Moisture Sensitivity: Level 1 per J-STD-020
- Terminals: Finish – Matte Tin Plated Leads, Solderable per MIL-STD-202, Method 208 e3
- Weight: 0.002 grams (Approximate)

Part Number	R1 (NOM)	R2 (NOM)
DDTA113ZE	1kΩ	10kΩ
DDTA123YE	2.2kΩ	10kΩ
DDTA123JE	2.2kΩ	47kΩ
DDTA143XE	4.7kΩ	10kΩ
DDTA143FE	4.7kΩ	22kΩ
DDTA143ZE	4.7kΩ	47kΩ
DDTA114YE	10kΩ	47kΩ
DDTA114WE	10kΩ	4.7kΩ
DDTA124XE	22kΩ	47kΩ
DDTA144VE	47kΩ	10kΩ
DDTA144WE	47kΩ	22kΩ

SOT523

Top View

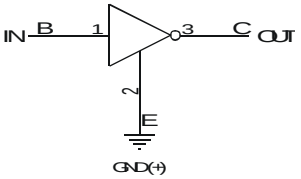

Device Schematic

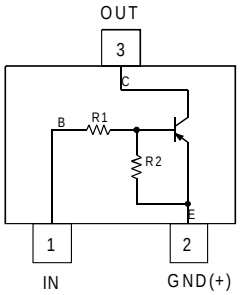

Package Pin Out Configuration

Ordering Information (Note 4)

Part Number	Compliance	Marking	Reel size (inches)	Tape width (mm)	Quantity per reel
DDTA113ZE-7-F	AEC-Q101	P02	7	8	3,000
DDTA123YE-7-F	AEC-Q101	P05	7	8	3,000
DDTA123JE-7-F	AEC-Q101	P06	7	8	3,000
DDTA143XE-7-F	AEC-Q101	P09	7	8	3,000
DDTA143FE-7-F	AEC-Q101	P10	7	8	3,000
DDTA143ZE-7-F	AEC-Q101	P11	7	8	3,000
DDTA114YE-7-F	AEC-Q101	P14	7	8	3,000
DDTA114WE-7-F	AEC-Q101	P15	7	8	3,000
DDTA124XE-7-F	AEC-Q101	P18	7	8	3,000
DDTA144VE-7-F	AEC-Q101	P21	7	8	3,000
DDTA144WE-7-F	AEC-Q101	P22	7	8	3,000

Notes:
1. No purposely added lead. Fully EU Directive 2002/95/EC (RoHS), 2011/65/EU (RoHS 2) & 2015/863/EU (RoHS 3) compliant.
2. See http://www.diodes.com/quality/lead_free.html for more information about Diodes Incorporated's definitions of Halogen- and Antimony-free, "Green" and Lead-free.
3. Halogen- and Antimony-free "Green" products are defined as those which contain <900ppm bromine, <900ppm chlorine (<1500ppm total Br + Cl) and <1000ppm antimony compounds.
4. For packaging details, go to our website at http://www.diodes.com/products/packages.html.

Marking Information

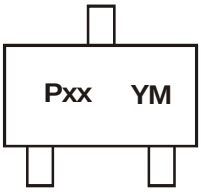

Pxx = Product Type Marking Code (See Ordering Information)
YM = Date Code Marking
Y or $\overline{Y}$ = Year (ex: F = 2018)
M = Month (ex: 9 = September)

Date Code Key

Year	2018	2019	2020	2021	2022	2023	2024	2025	2026	2027	2028
Code	F	G	H	I	J	K	L	M	N	O	P

Month	Jan	Feb	Mar	Apr	May	Jun	Jul	Aug	Sep	Oct	Nov	Dec
Code	1	2	3	4	5	6	7	8	9	O	N	D

© Diodes Incorporated

Absolute Maximum Ratings (@T_A = 25°C unless otherwise specified)

Characteristic		Symbol	Value	Unit
Supply Voltage, (2) to (3)		V_{CC}	-50	V
Input Voltage, (1) to (2)	DDTA113ZE	V_{IN}	+5 to -10	V
	DDTA123YE		+5 to -12	
	DDTA123JE		+5 to -12	
	DDTA143XE		+7 to -20	
	DDTA143FE		+6 to -30	
	DDTA143ZE		+5 to -30	
	DDTA114YE		+6 to -40	
	DDTA114WE		+10 to -30	
	DDTA124XE		+10 to -40	
	DDTA144VE		+15 to -40	
	DDTA144WE		+10 to -40	
Output Current	DDTA113ZE	I_O	-100	mA
	DDTA123YE		-100	
	DDTA123JE		-100	
	DDTA143XE		-100	
	DDTA143FE		-100	
	DDTA143ZE		-100	
	DDTA114YE		-70	
	DDTA114WE		-100	
	DDTA124XE		-50	
	DDTA144VE		-30	
	DDTA144WE		-30	
Output Current	All	$I_{C(MAX)}$	-100	mA

Thermal Characteristics

Characteristic	Symbol	Value	Unit
Power Dissipation (Note 5)	P_D	150	mW
Thermal Resistance, Junction to Ambient Air (Note 5)	$R_{\theta JA}$	833	°C/W
Operating and Storage Temperature Range	T_J, T_{STG}	-55 to +150	°C

Note: 5. Mounted on FR4 PC Board with minimum recommended pad layout.

© Diodes Incorporated

Electrical Characteristics (@T_A = 25°C unless otherwise specified)

Characteristic		Symbol	Min	Typ	Max	Unit	Test Condition
Input Voltage	DDTA113ZE	$V_{I(OFF)}$	-0.3	—	—	V	V_{CC} = -5V, I_O = -100µA
	DDTA123YE		-0.3				
	DDTA123JE		-0.5				
	DDTA143XE		-0.3				
	DDTA143FE		-0.3				
	DDTA143ZE		-0.5				
	DDTA114YE		-0.3				
	DDTA114WE		-0.8				
	DDTA124XE		-0.4				
	DDTA144VE		-1.0				
	DDTA144WE		-0.8				
	DDTA113ZE	$V_{I(ON)}$	—	—	-3.0		V_O = -0.3V, I_O = -20mA
	DDTA123YE				-3.0		V_O = -0.3V, I_O = -20mA
	DDTA123JE				-1.1		V_O = -0.3V, I_O = -5mA
	DDTA143XE				-2.5		V_O = -0.3V, I_O = -20mA
	DDTA143FE				-1.3		V_O = -0.3V, I_O = -3mA
	DDTA143ZE				-1.3		V_O = -0.3V, I_O = -5mA
	DDTA114YE				-1.4		V_O = -0.3V, I_O = -1mA
	DDTA114WE				-3.0		V_O = -0.3V, I_O = -2mA
	DDTA124XE				-2.5		V_O = -0.3V, I_O = -2mA
	DDTA144VE				-5.0		V_O = -0.3V, I_O = -2mA
	DDTA144WE				-4.0		V_O = -0.3V, I_O = -2mA
Output Voltage		$V_{O(ON)}$	—	-0.1	-0.3	V	I_O/I_I = -5mA/-0.25mA DDTA123E I_O/I_I = -5mA/-0.25mA DDTA143E I_O/I_I = -5mA/-0.25mA DDTA114E I_O/I_I = -10mA/-0.5mA All Others
Input Current	DDTA113ZE	I_I	—	—	-7.2	mA	V_I = -5V
	DDTA123YE				-3.8		
	DDTA123JE				-3.6		
	DDTA143XE				-1.8		
	DDTA143FE				-1.8		
	DDTA143ZE				-1.8		
	DDTA114YE				-0.88		
	DDTA114WE				-0.88		
	DDTA124XE				-0.36		
	DDTA144VE				-0.16		
	DDTA144WE				-0.16		
Output Current		$I_{O(OFF)}$	—	—	-0.5	µA	V_{CC} = -50V, V_I = 0V
DC Current Gain	DDTA113ZE	G_I	33	—	—	—	V_O = -5V, I_O = -10mA
	DDTA123YE		33				
	DDTA123JE		80				
	DDTA143XE		30				
	DDTA143FE		68				
	DDTA143ZE		80				
	DDTA114YE		68				
	DDTA114WE		24				
	DDTA124XE		68				
	DDTA144VE		33				
	DDTA144WE		56				
Input Resistor Tolerance		ΔR_1	-30	—	+30	%	—
Resistance Ratio Tolerance		$\Delta R_2/R_1$	-20	—	+20	%	—
Gain-Bandwidth Product (Note 6)		f_T	—	250	—	MHz	V_{CE} = -10V, I_E = 5mA, f = 100MHz

Note: 6. Transistor – For Reference Only

© Diodes Incorporated

Typical Curves – DDTA123JE

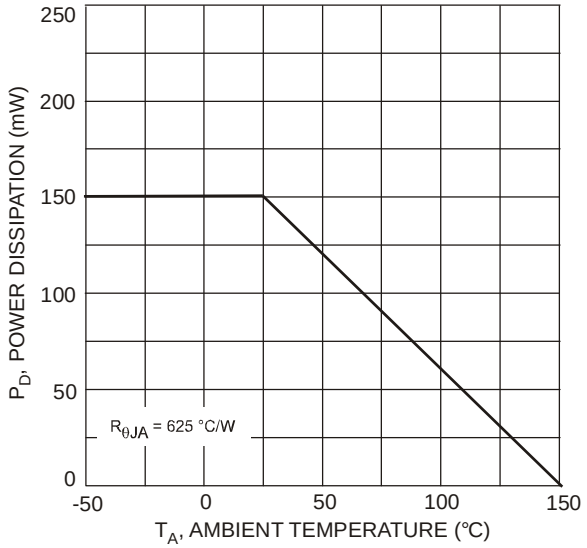

Fig. 1 Power Dissipation vs. Ambient Temperature

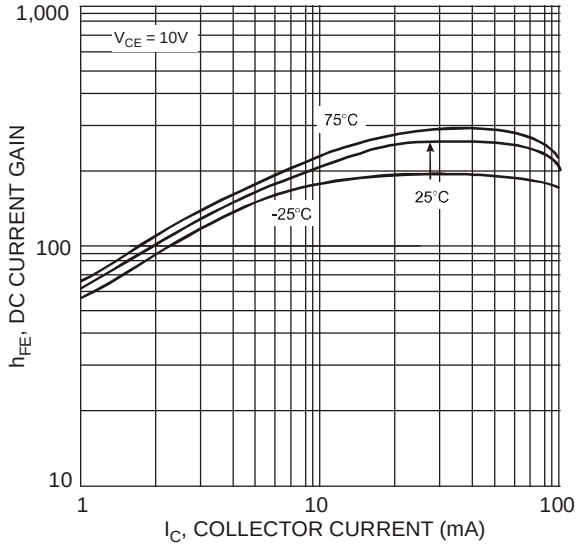

Fig. 2 Typical DC Current Gain vs. Collector Current

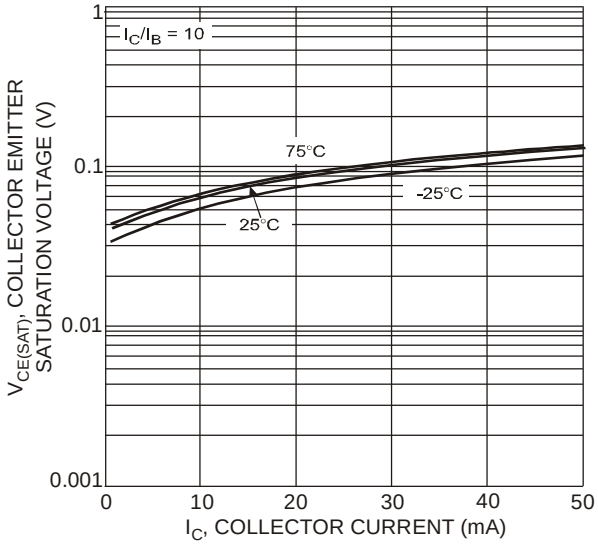

Fig. 3 Collector Emitter Saturation Voltage vs. Collector Current

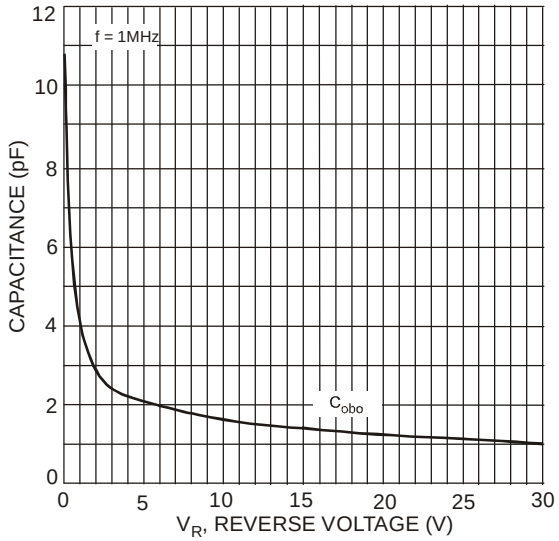

Fig. 4 Typical Capacitance Characteristics

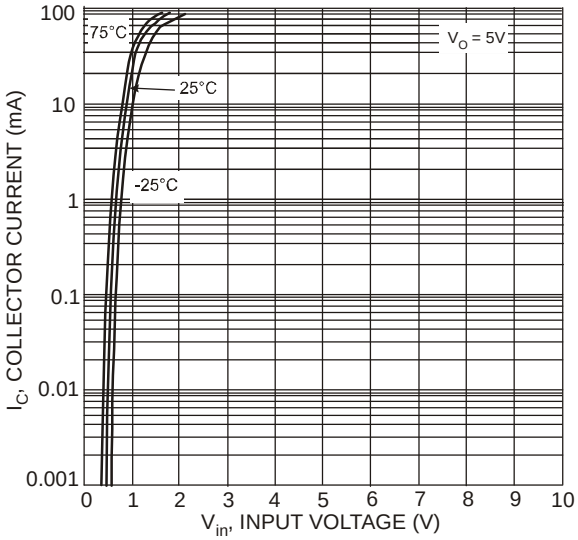

Fig. 5 Collector Current vs. Input Voltage

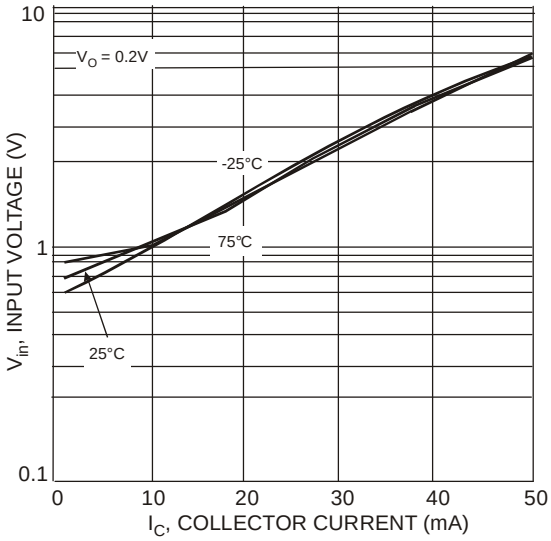

Fig. 6 Input Voltage vs. Collector Current

© Diodes Incorporated

Package Outline Dimensions

Please see http://www.diodes.com/package-outlines.html for the latest version.

SOT523

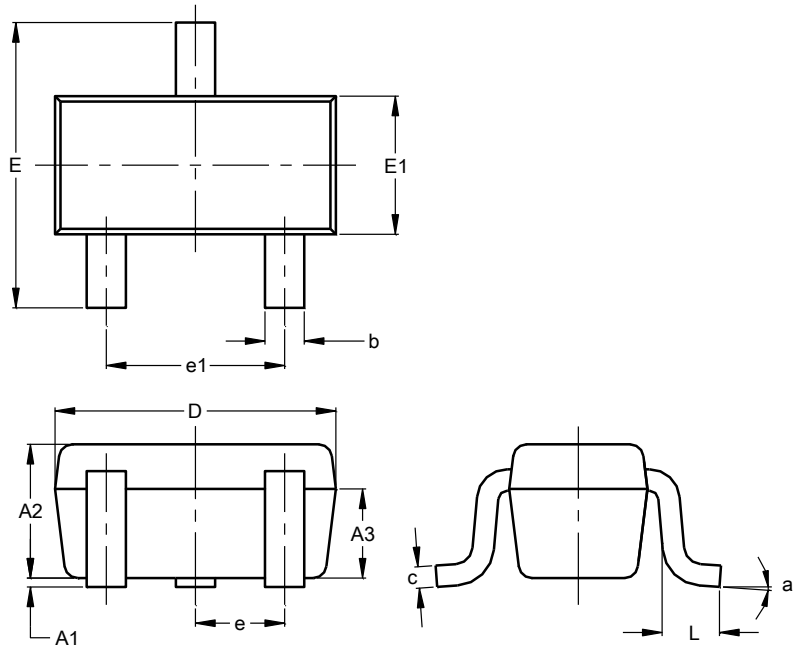

SOT523			
Dim	**Min**	**Max**	**Typ**
A1	0.00	0.10	0.05
A2	0.60	0.80	0.75
A3	0.45	0.65	0.50
b	0.15	0.30	0.22
c	0.10	0.20	0.12
D	1.50	1.70	1.60
E	1.45	1.75	1.60
E1	0.75	0.85	0.80
e	0.50 BSC		
e1	0.90	1.10	1.00
L	0.20	0.40	0.33
a	0°	--	8°
All Dimensions in mm			

Suggested Pad Layout

Please see http://www.diodes.com/package-outlines.html for the latest version.

SOT523

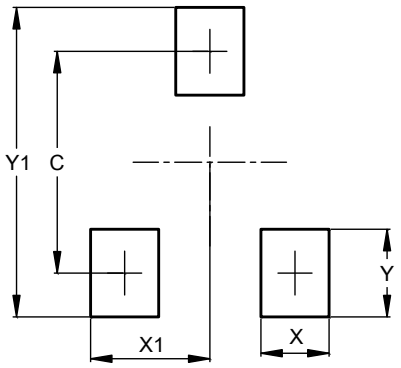

Dimensions	Value
C	1.29
X	0.40
X1	0.70
Y	0.51
Y1	1.80

© Diodes Incorporated

IMPORTANT NOTICE

DIODES INCORPORATED MAKES NO WARRANTY OF ANY KIND, EXPRESS OR IMPLIED, WITH REGARDS TO THIS DOCUMENT, INCLUDING, BUT NOT LIMITED TO, THE IMPLIED WARRANTIES OF MERCHANTABILITY AND FITNESS FOR A PARTICULAR PURPOSE (AND THEIR EQUIVALENTS UNDER THE LAWS OF ANY JURISDICTION).

Diodes Incorporated and its subsidiaries reserve the right to make modifications, enhancements, improvements, corrections or other changes without further notice to this document and any product described herein. Diodes Incorporated does not assume any liability arising out of the application or use of this document or any product described herein; neither does Diodes Incorporated convey any license under its patent or trademark rights, nor the rights of others. Any Customer or user of this document or products described herein in such applications shall assume all risks of such use and will agree to hold Diodes Incorporated and all the companies whose products are represented on Diodes Incorporated website, harmless against all damages.

Diodes Incorporated does not warrant or accept any liability whatsoever in respect of any products purchased through unauthorized sales channel. Should Customers purchase or use Diodes Incorporated products for any unintended or unauthorized application, Customers shall indemnify and hold Diodes Incorporated and its representatives harmless against all claims, damages, expenses, and attorney fees arising out of, directly or indirectly, any claim of personal injury or death associated with such unintended or unauthorized application.

Products described herein may be covered by one or more United States, international or foreign patents pending. Product names and markings noted herein may also be covered by one or more United States, international or foreign trademarks.

This document is written in English but may be translated into multiple languages for reference. Only the English version of this document is the final and determinative format released by Diodes Incorporated.

LIFE SUPPORT

Diodes Incorporated products are specifically not authorized for use as critical components in life support devices or systems without the express written approval of the Chief Executive Officer of Diodes Incorporated. As used herein:

A. Life support devices or systems are devices or systems which:

1. are intended to implant into the body, or
2. support or sustain life and whose failure to perform when properly used in accordance with instructions for use provided in the labeling can be reasonably expected to result in significant injury to the user.

B. A critical component is any component in a life support device or system whose failure to perform can be reasonably expected to cause the failure of the life support device or to affect its safety or effectiveness.

Customers represent that they have all necessary expertise in the safety and regulatory ramifications of their life support devices or systems, and acknowledge and agree that they are solely responsible for all legal, regulatory and safety-related requirements concerning their products and any use of Diodes Incorporated products in such safety-critical, life support devices or systems, notwithstanding any devices- or systems-related information or support that may be provided by Diodes Incorporated. Further, Customers must fully indemnify Diodes Incorporated and its representatives against any damages arising out of the use of Diodes Incorporated products in such safety-critical, life support devices or systems.

Copyright © 2018, Diodes Incorporated

www.diodes.com

Looking for pricing, stock, or lifecycle information?

Click below to explore more details on WIN SOURCE:

- View DDTA114YE-7-F on WIN SOURCE
- Diodes Incorporated Information

Optimize Your Supply Chain with WIN SOURCE Solutions

- Global Sourcing Solution
- Obsolete Management
- Cost Control Management
- Shortage Management
- Alternative Solution
- Excess Inventory Management