THE DATASHEET OF

TDC-GP30YA-F01 1K

www.win-source.net 0086-755-83957316

Datasheet

DS000391

TDC-GP30

System-Integrated Solution for Ultrasonic Flow Meters

(Volume 1: General Data and Frontend Description)

v5-00 • 2020-Mai-05

This product, formerly soled by ams AG, and before that by acam-messelectronics GmbH, is now owned and sold by ScioSence B.V.. This commercial transfer does not affect the technical specification or quality oft he product.

Copyrights & Disclaimer

Copyright ScioSense B.V., High Tech Campus 10, 5656 AE Eindhoven, The Netherlands. Trademarks Registered. All rights reserved. The material herein may not be reproduced, adapted, merged, translated, stored, or used without the prior written consent of the copyright owner.
Devices sold by ScioSense B.V. are covered by the warranty and patent indemnification provisions appearing in its General Terms of Trade. ScioSense B.V. makes no warranty, express, statutory, implied, or by description regarding the information set forth herein. ScioSense B.V. reserves the right to change specifications and prices at any time and without notice. Therefore, prior to designing this product into a system, it is necessary to check with ScioSense B.V. for current information. This product is intended for use in commercial applications. Applications requiring extended temperature range, unusual environmental requirements, or high reliability applications, such as military, medical life-support or life-sustaining equipment are specifically not recommended without additional processing by ScioSense B.V. for each application. This product is provided by ScioSense B.V. “AS IS” and any express or implied warranties, including, but not limited to the implied warranties of merchantability and fitness for a particular purpose are disclaimed.

ScioSense B.V. shall not be liable to recipient or any third party for any damages, including but not limited to personal injury, property damage, loss of profits, loss of use, interruption of business or indirect, special, incidental or consequential damages, of any kind, in connection with or arising out of the furnishing, performance or use of the technical data herein. No obligation or liability to recipient or any third party shall arise or flow out of ScioSense B.V. rendering of technical or other services.

RoHS Compliant & ScioSense Green Statement
RoHS Compliant: The term RoHS compliant means that ScioSense B.V. products fully comply with current RoHS directives. Our semiconductor products do not contain any chemicals for all 6 substance categories, including the requirement that lead not exceed 0.1% by weight in homogeneous materials. Where designed to be soldered at high temperatures, RoHS compliant products are suitable for use in specified lead-free processes.
ScioSense Green (RoHS compliant and no Sb/Br): ScioSense Green defines that in addition to RoHS compliance, our products are free of Bromine (Br) and Antimony (Sb) based flame retardants (Br or Sb do not exceed 0.1% by weight in homogeneous material).
Important Information: The information provided in this statement represents ScioSense B.V. knowledge and belief as of the date that it is provided. ScioSense B.V. bases its knowledge and belief on information provided by third parties and makes no representation or warranty as to the accuracy of such information. Efforts are underway to better integrate information from third parties. ScioSense B.V. has taken and continues to take reasonable steps to provide representative and accurate information but may not have conducted destructive testing or chemical analysis on incoming materials and chemicals. ScioSense B.V. and ScioSense B.V. suppliers consider certain information to be proprietary, and thus CAS numbers and other limited information may not be available for release

Support / Contact

For direct sales, distributor and sales representative contacts, visit the ScioSense web site at:
www.sciosense.com

For technical support you can contact the ScioSense support team:
customersupport@sciosense.com
or by phone +49-7244-74190.

Notational Conventions

Throughout the GP30 documentation, the following stile formats are used to support efficient reading and understanding of the documents:

- Hexadecimal numbers are denoted by a leading 0x, e.g. 0xAF = 175 as decimal number. Decimal numbers are given as usual.
- Binary numbers are denoted by a leading 0b, e.g. 0b1101 = 13. The length of a binary number can be given in bit (b) or Byte (B), and the four bytes of a 32b word are denoted B0, B1, B2 and B3 where B0 is the lowest and B3 the highest byte.
- Abbreviations and expressions which have a special or uncommon meaning within the context of GP30 application are listed and shortly explained in the list of abbreviations, see following page. They are written in plain text. Whenever the meaning of an abbreviation or expression is unclear, please refer to the glossary at the end of this document.
- **Variable names** for hard coded registers and flags are in bold. Meaning and location of these variables is explained in the datasheet (see registers CR, SRR and SHR).
- ***Variable names*** which represent memory or code addresses are in bold italics. Many of these addresses have a fixed value inside the ROM code, others may be freely defined by software. Their meaning is explained in the firmware and ROM code description, and their physical addresses can be found in the header files. These variable names are defined by the header files and thus known to the assembler as soon as the header files are included in the assembler source code. Note that different variable names may have the same address, especially temporary variables.
- *Physical variables* are in italics (real times, lengths, flows or temperatures).

Abbrevations

AM	Amplitude measurement
CD	Configuration Data
CPU	Central Processing Unit
CR	Configuration Register
CRC	Cyclic Redundancy Check
DIFTOF, DIFTOF_ALL	Difference of up and down ->TOF
DR	Debug Register
FEP	Frontend Processing
FDB	Frontend data buffer
FHL	First hit level (physical value V_{FHL})
FW	Firmware, software stored on the chip
FWC	Firmware Code
FWD	Firmware Data
FWD-RAM	Firmware Data memory
GPIO	General purpose input/output
Hit	Stands for a detected wave period
HSO	High speed oscillator
INIT	Initialization process of ->CPU or -> FEP
IO	Input/output
I2C	Inter-Integrated Circuit bus
LSO	Low speed oscillator
MRG	Measurement Rate Generator
NVRAM, NVM	Programmable Non-Volatile Memory
PI	Pulse interface
PP	Post Processing
PWR	Pulse width ratio
R	RAM address pointer of the CPU, can also stand for the addressed register
RAA	Random Access Area
RAM	Random Access Memory
RI	Remote Interface
ROM	Read Only Memory
ROM code	Hard coded routines in ROM
SHR	System Handling Register
SPI	Serial Peripheral Interface
SRAM	Static RAM
SRR	Status & Result Register
SUMTOF	Sum of up and down TOF
Task	Process, job
TDC	Time-to-digital-converter
TOF, TOF_ALL	Time of Flight
TS	Task Sequencer
TM	Temperature measurement
UART	Universal Asynchronous Receiver & Transmitter
USM	Ultrasonic measurement
V_{ref}	Reference voltage
X,Y,Z	Internal registers of the CPU
ZCD	Zero cross detection, physical level V_{ZCD}

For details see the glossary in section 9.

Content

1 Overview 1-3
1.1 Key Features 1-3
1.2 Block diagram 1-4
1.3 Ordering Numbers 1-4
2 Characteristics & Specifications 2-1
2.1 Electrical Characteristics 2-1
2.2 Timings 2-5
2.3 Pin Description 2-9
2.4 Package Drawings 2-11
3 Flow and Temperature Measurement 3-13
3.1 Measuring principle 3-13
3.2 Ultrasonic Measurement 3-17
3.3 Temperature Measurement 3-21
3.4 Chip level calibrations 3-26
4 Special Service Functions 4-1
4.1 Watchdog 4-1
4.2 Time Stamp (RTC) 4-1
4.3 Backup 4-1
4.4 Clock Management 4-1
4.5 Power Supply 4-4
4.6 Voltage Measurement 4-6
5 Remote Port Interfaces 5-1
5.1 SPI Interface 5-1
5.2 UART Interface 5-1
5.3 Remote Communication (Opcodes) 5-3
5.4 Opcodes 5-3
6 General Purpose IO Unit 6-1
6.1 Pulse Interface 6-2
6.2 EEPROM Interface 6-5
7 Memory Organization & CPU 7-1
7.1 Program Area 7-3
7.2 Random Access Area (RAA) 7-4
7.3 Configuration Registers 7-10
7.4 System Handling Register 7-21
7.5 Status Registers 7-28
8 Applications 8-1
8.1 GP30-DEMO Board 8-1
8.2 GP30 Typical Configuration 8-2

9 Glossary 9-1
10 Miscellaneous 10-1
10.1 Bug Report 10-1
10.2 Last Changes from 0.4 to current version 5 10-1

1 Overview

TDC-GP30 is the next generation in acam's development for ultrasonic flow converters. The objectives of the TDC-GP30 development are as follows:

- Easy-to-adapt two-chip solution for ultrasonic heat and water meters (GP30 + simple µP)
- Single-chip solution for many industrial applications or pure flow meter parts
- All flow and temperature calculations are done by GP30
- External µP needed only for interfaces (e.g. LCD, wireless, etc.) and other general-purpose tasks
- Integrated standard pulse interface enables one-to-one replacement of mechanical meters by GP30 based single-chip heat and water meters – customer µP and software remains unchanged.

All in all, the TDC-GP30 is the next step in ultrasonic flow metering. It drastically simplifies the design of ultrasonic heat and water meters and is the necessary step for compact energy-saving ultrasonic water meters. The ultra-low-current capabilities allow the use of standard 2/3 AA or AA lithium thionyl chloride batteries at 6-8 Hz measuring frequency even in the water meter version. The TDC-GP30 is a system-on-chip approach that allows you to perform all measurement tasks in one IC.

1.1 Key Features

- High performance + ultra-low power 32-Bit CPU with
  - 128 * 32 bit NVRAM (non-volatile RAM) for user firmware parameter & data
  - 4k * 8 bit NVRAM (non-volatile RAM) for user firmware program code
  - 4k * 8 bit ROM for system task code and special flow library code
- Capability of MID-compliant flow & temperature calculation, GP30-supported
- Flexible interfaces, SPI, UART, pulse (flow only)
- Advanced high-precision analog part
- Transducers can be connected directly to GP30, no external components required
- Amplitude measurements of receiving signal for secure bubble, aging and empty spool piece detection
- Up to 31 multi-hits for flow measurement yield the highest accuracy
- High update rates with very low power consumption of for example 6 µA at 8 Hz, including flow and temperature calculations, measure rate adopted to the flow
- Very low space and component requirements

1.2 Block diagram

Figure 1-1: Block diagram

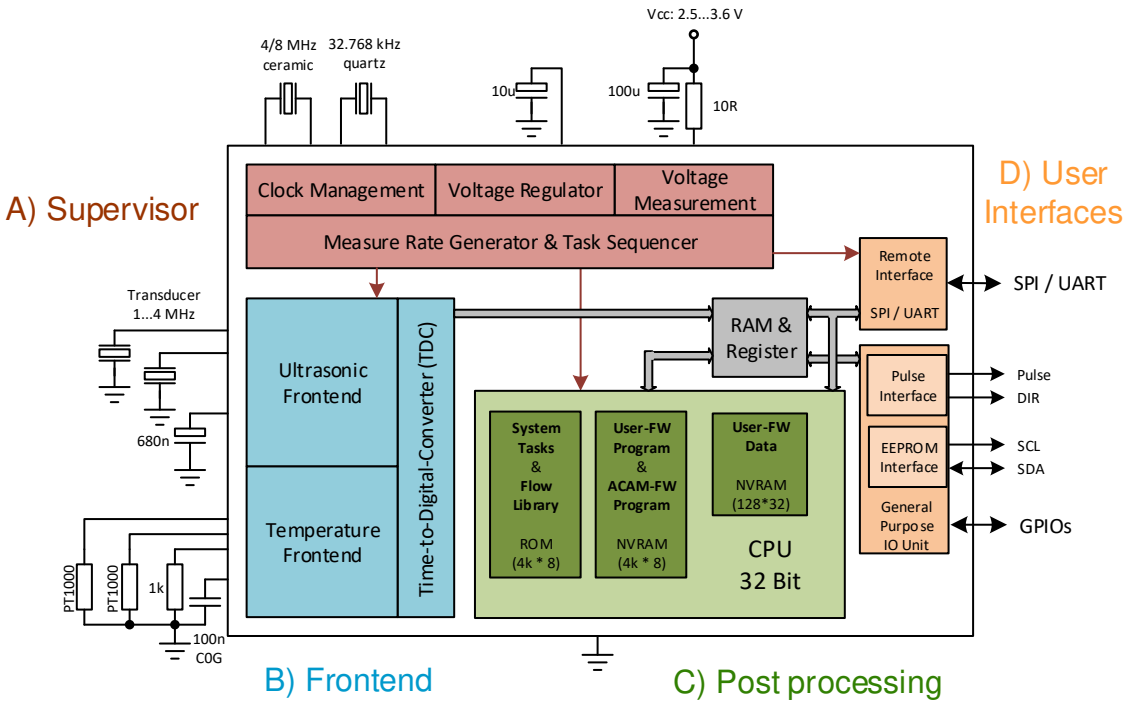

Main functional blocks of TDC-GP30:

A) Supervisor: Timing and voltage control

B) Frontend: TOF and sensor temperature measurements

C) Post processing: CPU operations, including initialization and firmware operations

D) User interfaces: Chip communication over SPI or UART, Pulse interface and GPIOs

1.3 Ordering Numbers

Part Number	Firmware	Material ID	Packing Qty. T&R
TDC-GP30YA 1K	no	**502030011**	1000
TDC-GP30YA 3K	no	**502030004**	3000
TDC-GP30YA-F01 1K	yes, F01	**502030013**	1000
TDC-GP30YA-F01 3K	yes, F01	**502030007**	3000
TDC-GP30YD 1K	no	**502030010**	1000
TDC-GP30YD 3K	no	**502030003**	3000
TDC-GP30YD-F01 1K	yes, F01	**502030012**	1000
TDC-GP30YD-F01 3K	yes, F01	**502030005**	3000

This product is RoHS-compliant and does not contain any Pb.

2 Characteristics & Specifications

2.1 Electrical Characteristics

Absolute Maximum Ratings

Stresses beyond those listed under “Absolute Maximum Ratings“ may cause permanent damage to the device. These are stress ratings only. Functional operation of the device at these or any other conditions beyond those indicated under “Electrical Characteristics” is not implied. Exposure to absolute maximum rating conditions for extended periods may affect device reliability.

Table 2-1 Absolute maximum ratings

Symbol	Parameter	Min	Max	Units
V_{CC}	Supply voltage V_{CC} vs. GND	-0.3	4.0	V
	All other pins	-0.3	V_{CC} + 0.6	V
T_{amb}	Ambient temperature	-40	+125	°C
T_{strg}	Storage temperature	-55	+150	°C
T_{body}	Body temperature JEDEC J-STD-020		260	°C
ESD	ESD rating (HBM), each pin	±2		kV

Table 2-2 Recommended operating conditions

Symbol	Parameter	Conditions	Min.	Typ.	Max.	Unit
V_{CC}	Supply voltage	main supply voltage	2.5	3.0	3.6	V
V_{DD18}	Core supply	Internally derived from V_{CC} and regulated	1.65	1.80	1.92	V
f_{LSO}	Low speed oscillator (LSO) frequency			32.768		kHz
f_{HSO}	High-speed oscillator (HSO) frequency	For Standard transducers, max. 2 MHz,	3.6	4	4.4	MHz
		For 4 MHz transducers, not in combination with UART	7.2	8	8.8	MHz
		Other frequencies in the range from 2 MHz to 8 MHz may be possible with limitations				
f_{SPI}	SPI Interface Clock Frequency	SPI communication			10	MHz
f_{TOF}	TOF measurement frequency	$f_{TOF} = \frac{1}{(TOF_RATE * t_{cycle})}$	0.004	1 … 8	80	Hz
t_{cycle}	Measurement cycle time	LSB = 976.5625 µs			4000	ms

Table 2-3 DC Characteristics (V_{CC} = 3.0 V, T_j = -40 to +85 °C)

Symbol	Parameter	Conditions	Min.	Typ.	Max.	Unit
$I_{Standby}$	Supply current only 32 kHz, Standby mode	only 32 kHz oscillator running @ 25 °C, V_{CC} = 3.6 V = 3.0 V		 3.6 2.2		 µA µA
I_{hs}	Operation current 4 MHz oscillator	V_{CC} = 3.6 V = 3.0 V off		80 65 < 1		µA µA nA
I_{tmu}	Current into time measuring unit including analog frontend	Only during active TOF time measurement		1.3		mA
I_{CCq}	Quiescent current GP30	all clocks off, @25 °C 1.8V LDO running		1.9		µA
I_{DDqc}	Quiescent current 1.8V digital core	all clocks off		0.08		µA
I_{AFE}	Average operating current analog front end only	TOF_UP+DOWN, 1/s		0.42		µA
I_o	Average operating current incl. CPU processing current	TOF_UP+DOWN, 1/s		0.9		µA
V_{oh}	High level output voltage	I_{oh}= 4 mA	V_{CC} - 0.4			V
V_{ol}	Low level output voltage	I_{ol} = 4 mA			0.4	V
V_{ih}	Logic High level input voltage	for proper logic function for low leakage current	0.7* V_{CC} V_{CC} - 0.2			V
V_{il}	Logic Low level input voltage	for proper logic function for low leakage current			0.3* V_{CC} 0.2	V

Note: See also section 4.5.2 for more information about the current consumption

Table 2-4 Terminal Capacitance

Symbol	Terminal	Condition	Rated Value			Unit
			Min.	Typ.	Max.	
C_i	Digital input	measured @ V_{CC} = 3.0 V f = 1 MHz, T_a = 25 °C		7		pF
C_o	Digital output			7		
C_{io}	Bidirectional			7		

Table 2-5 Analog Frontend

Symbol	Terminal	Condition	Rated Value			Unit
			Min.	Typ.	Max.	
	Comparator input offset voltage (calibrated by Zero Cross Calibration, see section 3.4.3)				< 1.6	mV
	Output Voltage High	Signal Offset = ½ V_{CC}		±¼ V_{CC}	±½ V_{CC} *	V
	Received Signal Level	Signal Offset = V_{REF}		±100 to ±V_{REF}	±V_{REF}	mV
	Input Offset/Level Step Size	V_{DD18} = 1.8 V		0.878		V
V_{REF}	Reference Voltage			0.7		V
	Transducer Interface Impedance (selectable by TI_PATH_SEL)	TI_PATH_SEL = 00 TI_PATH_SEL = 01 TI_PATH_SEL = 10 TI_PATH_SEL = 11		infinite 350 550 214		 Ω Ω Ω

* Without external load.

Table 2-6 NVRAM

Symbol	Terminal	Condition	Minimum Value	Unit
	Data retention @ 125 °C	V_{CC} = 2.5 to 3.6 V	20	Years
	Endurance *	@ 25 C V_{CC}= 3.0 to 3.6 V	10^5	Cycles
		@ 125 C V_{CC}= 3.0 to 3.6 V	10^4	Cycles

* See 6.2 EEPROM interface for backup applications.

Converter Specification

Table 2-7 Time Measuring Unit (V_{CC} = 3.0 V, T_j = 25 °C)

Symbol	Terminal	Condition	Rated Value			Unit
			Min.	Typ.	Max.	
LSB	TDC Resolution (BIN-Size)			11		ps
LSB	TDC rms Noise			1.2		LSB
t_m	Measurement range	TOF measurement	10		4096	µs
t_m	Measurement range	Temperature interface measurement	10		1024	µs

Table 2-8 Temperature Measuring Unit[1]

Symbol	Terminal	PT1000	PT500	Unit
		Typical.	Typical	

	Resolution RMS	17.0	17.0	Bit
	Absolute Gain[2]	1.0004	1.0002	
	Gain-Drift vs. V_{CC}	0.01	0.01	%/V
	Gain-Drift vs. Temp	< 2	< 3	ppm/K
	Initial Zero Offset T_{cold} <-> T_{hot}	< 2	< 4	mK
	Initial Zero Offset T_{ref} <-> (T_{cold}, T_{hot})	< 20	< 40	mK
	Offset Drift vs. Temp	< 0.05	< 0.05	mK/K

[1] 2-Wire measurement with compensation of $R_{ds(on)}$ and gain (Schmitt trigger). All values measured at V_{CC} = 3.0 V, C_{load} = 100 nF for PT1000 and 200 nF for PT500 (C0G-type)

[2] Compared to an ideal gain of 1.0

2.2 Timings

At V_{CC} = 3.0 V ± 0.3 V, ambient temperature -40 °C to +85 °C unless otherwise specified

2.2.1 Oscillators

Table 2-9 Oscillator specifications

Symbol	Parameter	Min.	Typ.	Max.	Unit
LSO_CLK	32 kHz reference oscillator at frequency f_{LSO}		32.768		kHz
ST_{LSO}	32 kHz oscillator start-up time after power-up		< 1		Sec.
HSO_CLK	High-speed reference oscillator at frequency f_{HSO}	2	4	8	MHz
ST_{HSO_CER}	Oscillator start-up time with ceramic resonator		<100		µs
ST_{HSO_CRY}	Oscillator start-up time with crystal oscillator (not recommended)		3		Ms
PS_CLK	Power supply clock	4	8	24	kHz

Remark:
It is strongly recommended that a ceramic oscillator be used for HSO_CLK because a quartz oscillator needs much longer time to settle than a ceramic oscillator. This consumes a lot of current, but using a quartz oscillator has no advantage when high speed clock calibration is done as supported by GP30.

2.2.2 Power-On

Table 2-10 Power-on timings

Symbol	Parameter	Min.	Typ.	Max.	Unit
t_{VDD18_STB}	Time when V_{DD18} is stable after power on of V_{CC} (C_L=100µF on VDD18_OUT)			20	ms
t_{RC_RLS}	Time when remote communication is released after power on of V_{CC}		40	88	ms
t_{MC_RLS}	Startup time after POR, until LSO is stable, @ 8 kHz for typ., 4 kHz for max. for		1.54	3	s

2.2.3 UART Interface

Table 2-11UART timings

Symbol	Parameter	Min.	Typ.	Max.	Unit
Baud rate	Baud rate	4800		115200	bps
t_{BIT}	Bit time (baud rate = 4800 Baud)		208.33		µs
	Bit time (Baudrate = 115200 Baud)		8.68		µs
t_{IBG}	Inter-Byte Gap	1		50	t_{BIT}

Figure 2-1 UART timing

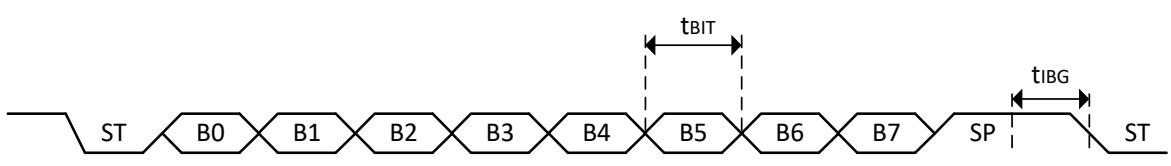

2.2.4 SPI Interface

Table 2-12 SPI timings

Symbol	Parameter	min	max	Unit
f_{SCK}	Serial clock frequency		10	MHz
t_{SCK}	Serial clock time period	100		ns
t_{pwh}	Serial clock, pulse width high	0.4 * t_{SCK}		ns
t_{pwl}	Serial clock, pulse width low	0.4 * t_{SCK}		ns
t_{sussn}	SSN enable to valid latch clock	0.5 * t_{SCK}		ns
t_{hssn}	SSN hold time after SCK falling	0.5 * t_{SCK}		ns
t_{pwssn}	SSN pulse width between two cycles	t_{SCK}		ns
t_{sud}	Data set-up time prior to SCK falling	5		ns
t_{hd}	Data hold time before SCK falling	5		ns
t_{vd}	Data valid after SCK rising		20	ns

Serial interface (SPI compatible, clock phase bit =1, clock polarity bit =0):

Figure 2-2 SPI Write

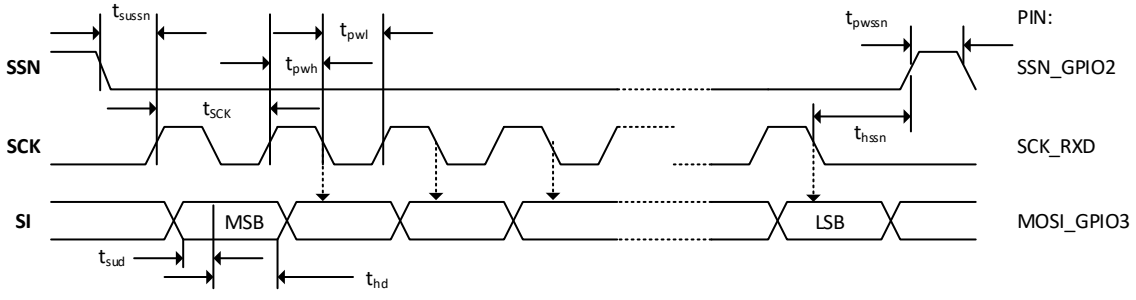

Figure 2-3 SPI Read

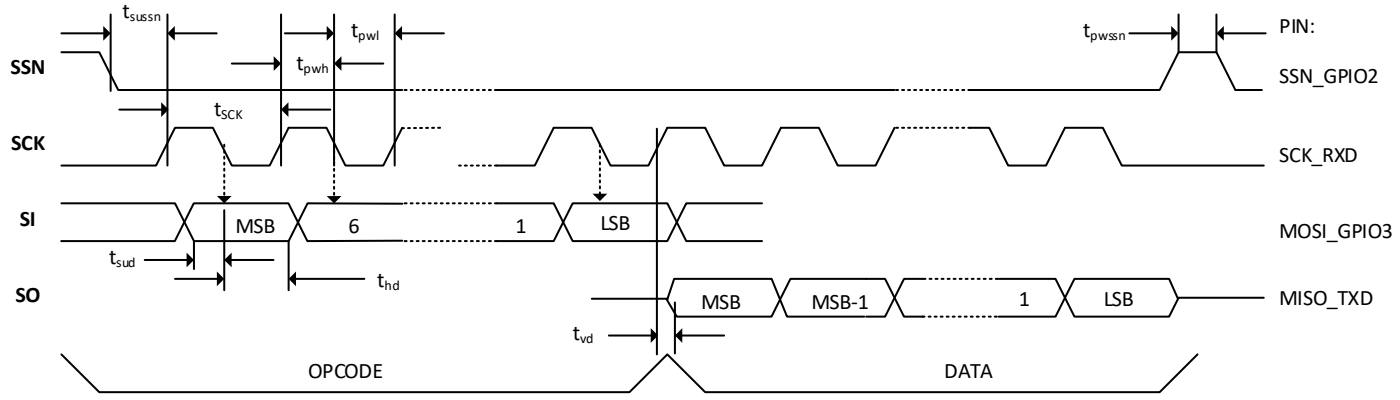

2.2.5 EEPROM Interface

(f_{HSO} = 4MHz)

Table 2-13 EEPROM timings

Symbol	Parameter	Min.	Typ.	Max.	Unit
f_{SCL}	SCL clock frequency	400			kHz
t_{LOW}	Low period of SCL clock	1300	1500		ns
t_{HIGH}	High period of SCL clock	600	1000		ns
t_{HD_STA}	Hold time for (repeated) START condition (S & Sr)	600	1000		ns
t_{SU_STA}	Setup time for repeated START condition (Sr)	600	750		ns
t_{SU_DAT}	Setup time data	100	750		ns
t_{HD_DAT}	Hold time data	0	750		ns
t_{VD_DAT}	Valid time data		750	900	ns
t_{SU_STO}	Setup time for STOP condition (P)	600	1750		ns
t_{BUF}	Bus free time between STOP and START condition	1300			ns

Figure 2-4 EEPROM timing

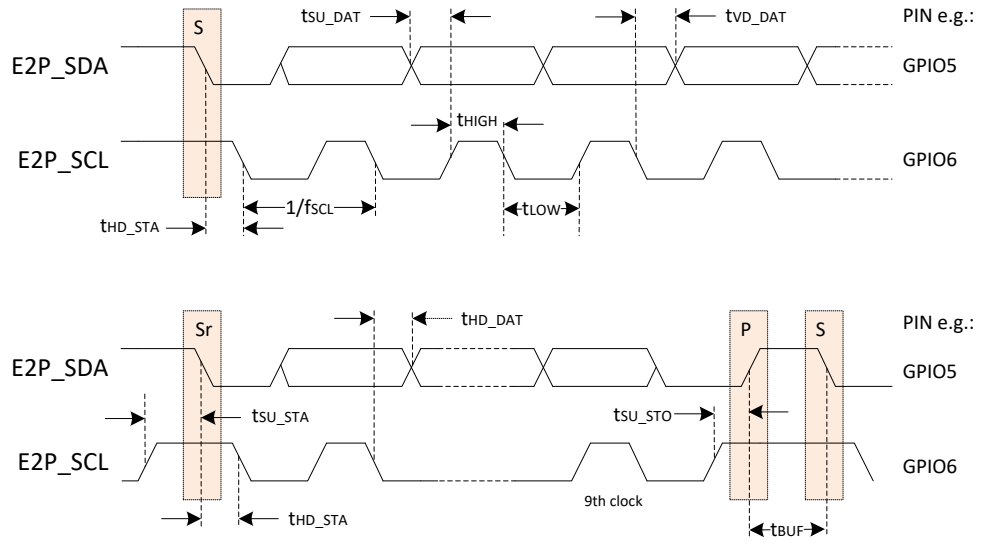

2.3 Pin Description

2.3.1 Device Marking

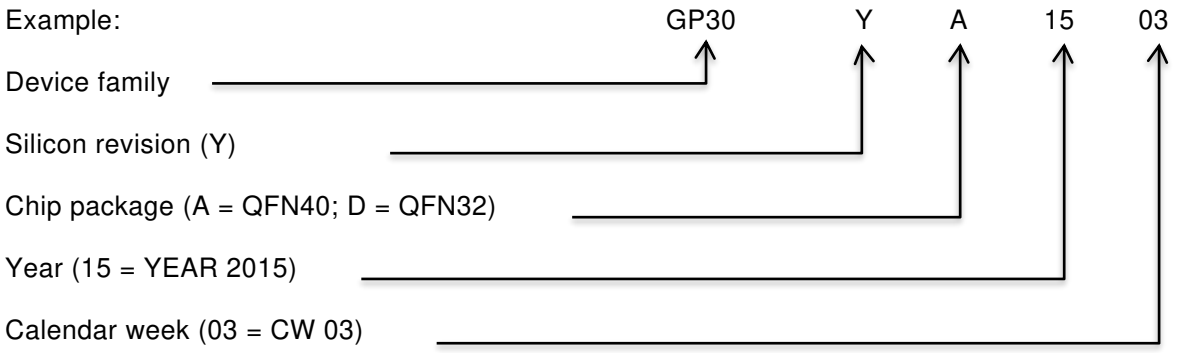

2.3.2 QFN Packages Chips

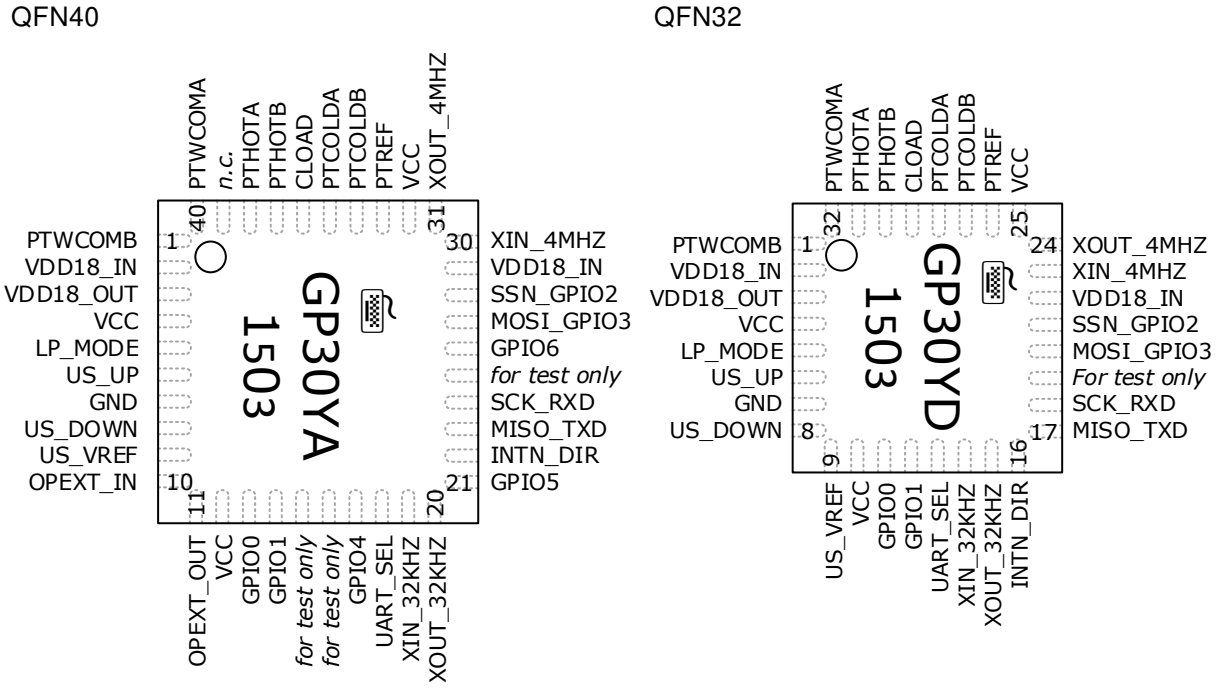

Figure 2-5 GP30 Pinout

QFN 40	QFN32	Name	Description	Buffer type
1	1	PTWCOMB	Temperature Sensor Port Common B	Analog
2	2	VDD18_IN	V_{DD18} TDC Supply Input (1.8 V)	Supply
3	3	VDD18_OUT	V_{DD18} voltage regulator output (1.8 V)	Supply
4	4	VCC	V_{CC} IO & Analog Supply (2.5..3.6 V)	Supply
5	5	LP_MODE	Low Power Mode (analog/digital)	Digital IN(Pull-up)
6	6	US_UP	Ultrasonic Transducer (Fire Up / Receive Down)	Analog
7	7	GND	Ground plane	
8	8	US_DOWN	Ultrasonic Transducer (Fire Down / Receive Up)	Analog
9	9	US_VREF	Ultrasonic Reference Voltage V_{ref} (typ. 0.7 V)	Power

QFN 40	QFN32	Name	Description	Buffer type
10	-	OPEXT_IN	External OP In (connect the input of the optional external OpAmp for amplifying ultrasonic echo here)	Analog
11	-	OPEXT_OUT	External OP Out (connect the output of the optional external OpAmp for amplifying ultrasonic echo here)	Analog
12	10	VCC	V_{CC} IO & Analog Supply (2.5..3.6 V)	Supply
13	11	GPIO0	General Purpose IO 0	Digital IO
14	12	GPIO1	General Purpose IO 1	Digital IO
15	-	TST_I	for test only	
16	-	TST_O	for test only	
17	-	GPIO4	General Purpose IO 4	Digital IO
18	13	UART_SEL	UART Select (0:SPI / 1:UART)	Digital IN
19	14	XIN_32KHZ	Low-Speed Oscillator (32.768 kHz)	Clock
20	15	XOUT_32KHZ	Low-Speed Oscillator (32.768 kHz)	Clock
21	-	GPIO5	General Purpose IO 5	Digital IO
22	16	INTN_DIR	SPI: Interrupt (low active) UART: Direction (0:Receive / 1:Send)	Digital OUT
23	17	MISO_TXD	SPI: Master In / Slave Out UART: Transmit Data	Digital OUT
24	18	SCK_RXD	SPI: Serial Clock UART: Receive Data	Digital IN
25	19	TEST_MODE_N	for test only	Digital IN(Pull-up)
26	-	GPIO6	General Purpose IO 6	Digital IO
27	20	MOSI_GPIO3	SPI: Master Out / Slave In UART: GPIO	Digital IN
28	21	SSN_GPIO2	SPI: Slave Select (low active) UART: GPIO	Digital IN
29	22	VDD18_IN	V_{DD18} Digital Core Supply Input (1.8 V)	Supply
30	23	XIN_4MHZ	High-Speed Oscillator (4 or 8 MHz)	Clock
31	24	XOUT_4MHZ	High-Speed Oscillator (4 or 8 MHz)	Clock
32	25	VCC	V_{CC} IO & Analog Supply (2.5..3.6 V)	Supply
33	26	PTREF	Temperature Sensor Port Reference Resistor	Analog
34	27	PTCOLDB	Temperature Sensor Port Cold B	Analog
35	28	PTCOLDA	Temperature Sensor Port Cold A	Analog
36	29	CLOAD	Temperature Measurement Load Capacitor	Analog
37	30	PTHOTB	Temperature Sensor Port Hot B	Analog
38	31	PTHOTA	Temperature Sensor Port Hot A	Analog
39	-	n.c.	not connected	
40	32	PTWCOMA	Temperature Sensor Port Common A	Digital IN

2.4 Package Drawings

Figure 2-6 QFN-40 package outline, 6 x 6 x 0.9 mm³, 0.5 mm lead pitch, bottom view

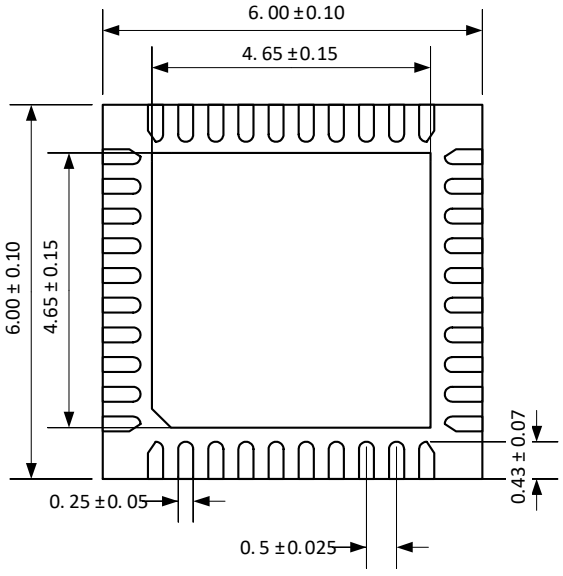

Figure 2-7 QFN-32 package outline, 5 x 5 x 0.9 mm³, 0.5 mm lead pitch, bottom view

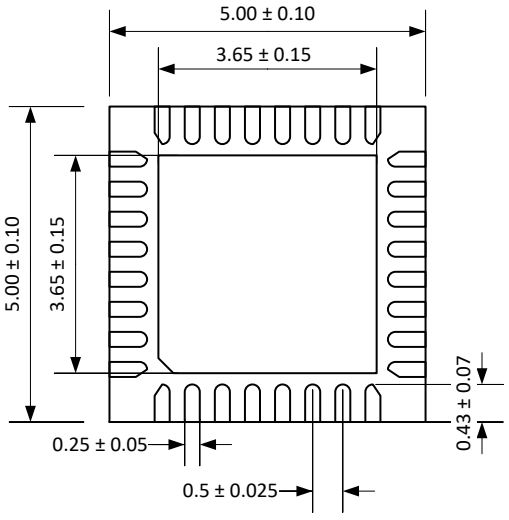

Side view

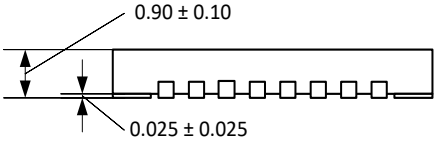

Landing pattern QFN40:

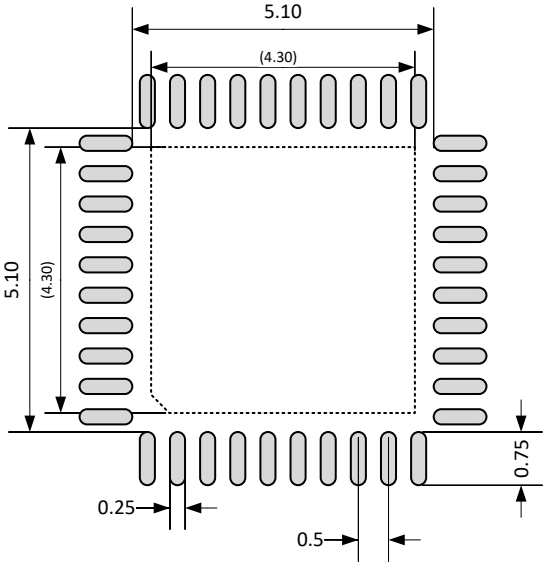

Landing pattern QFN32:

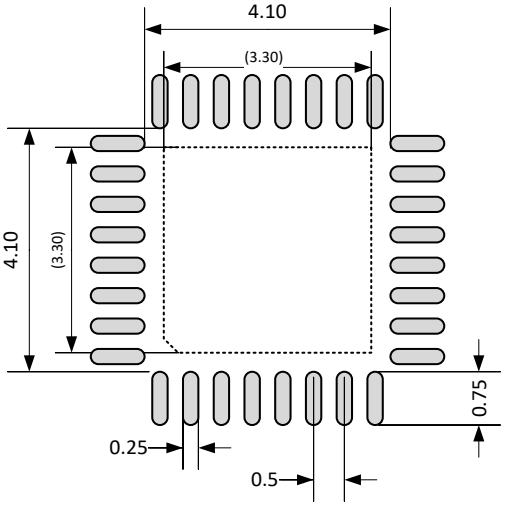

Caution: The center pad is internally connected to GND. No wires other than GND are allowed underneath. It is **not necessary** to connect the center pad to GND.

Marking:

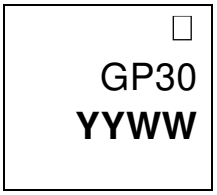

: **Date Code:** YYWW: YY = Year, WW = week

Thermal resistance: Roughly 28 K/W (value just for reference).
Environmental: The package is RoHS-compliant and does not contain any lead.
Moisture Sensitive Level (MSL)
Based on JEDEC 020 moisture sensitivity level definition the TDC-GP30 is classified as MSL 3.
Soldering Temperature Profile
The temperature profile for infrared reflow furnace (in which the temperature is the resin's surface temperature) should be maintained within the range described below.

Figure 2-8 Soldering profile

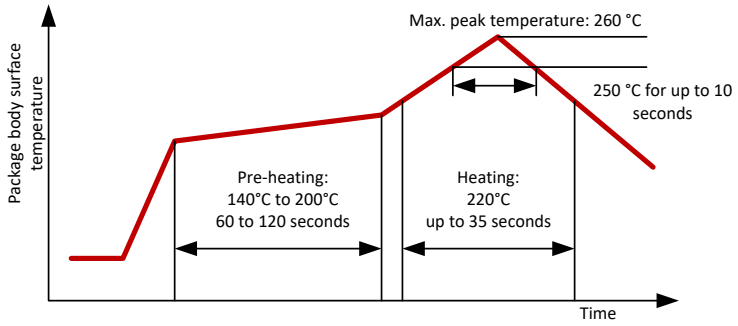

Maximum temperature

The maximum temperature requirement for the resin surface, where 260ºC is the peak temperature of the package body's surface, is that the resin surface temperature must not exceed 250ºC for more than 10 seconds. This temperature should be kept as low as possible to reduce the load caused by thermal stress on the package, which is why soldering is recommended only for short periods. In addition to using a suitable temperature profile, we also recommend that you check carefully to confirm good soldering results.

3 Flow and Temperature Measurement

The TDC-GP30 incorporates the complete system to measure and calculate the flow through a spool piece for ultrasonic flow metering: the driver for the piezo transducers, the offset stabilized comparator, the analog switches, the CPU to calculate the flow, the clock control unit and, above all, the measure rate control and task sequencer which manage the timing and interaction of all the units during measurement.

3.1 Measuring principle

The GP30 measures flow by measuring the difference in time-of-flight (TOF) of an ultrasonic pulse which travels with the flow (downstream) and opposite to the flow (upstream). For water meters, water temperature can be calculated from the time-of-flight data, too.. For heat meters, a high-precision temperature measurement unit is additionally integrated (see section 3.3).

Figure 3-1 Ultrasonic time-of-flight principle: Cross sections of an example spool piece with down- and upstream measurement

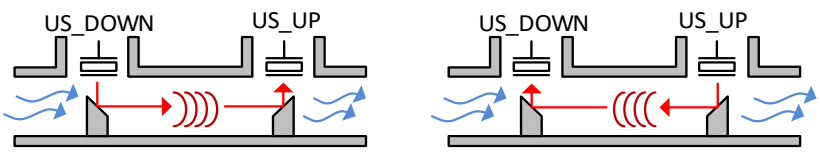

$$t_{down} = \frac{L}{c_0 + v} \qquad t_{up} = \frac{L}{c_0 - v} \qquad v \approx \frac{\Delta t * {c_0}^2}{2 * L}$$

t_{up}, t_{down}: Signal travel times TOF_{UP} and TOF_{DOWN}

$\Delta t = t_{up} - t_{down}$: $DIFTOF$

L: ultrasonic signal path length parallel to flow

c_0: speed of sound in water

v: flow speed

The flow speed *v* is a measure for the actual flow through the spool piece, and integrating the flow over time yields the flow volume.

Connecting the sensors is very simple. The ultrasonic transducer which sends against flow (in up direction) is directly connected to the US_UP pin, the ultrasonic transducer which sends with flow (in down direction) is directly connected to the US_DOWN pin. The resistors and capacitors in the transducer driver path are integrated in TDC-GP30 .

The temperature sensors, reference resistor and charge capacitors are connected to the temperature ports and GND. The temperature unit is suitable for sensors with 500 Ohm and higher like PT500 or PT1000. The chip supports 2-wire sensors and 4-wire sensors and is good for 1.5 mK rms resolution.

Figure 3-2 External connection of sensors: ultrasonic transducers (left) and temperature sensors (right for 2-Wire; for 4-wire sensors, see section 3.3)

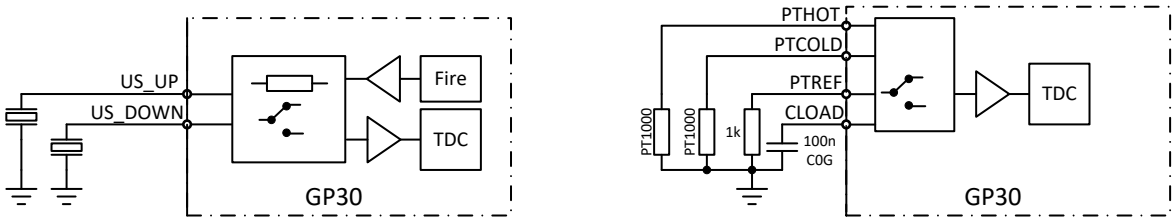

3.1.1 Measurement Sequence

The GP30 is designed for autonomous operation. In self-controlled flow meter mode it triggers all measurements and does data processing to deliver final results, independent of external control. It can also be configured to wake up an external microcontroller for communication of results.. Alternatively, the GP30 can act as a pure converter that controls the measurement but without any data processing (time conversion mode, self-controlled). For debugging, individual tasks can also be triggered remotely by an external microcontroller (time conversion mode, remote controlled).

Table 3-1 Operating modes

Operating Mode	Measure Rate Generation	Application Setup	Post Processing
Flow meter mode (self-controlled)	by GP30	by GP30	by GP30
Time conversion mode (self-controlled)		per Remote	per Remote
Time conversion mode (remote controlled, only for test or debug purpose)	per Remote		

The various functional blocks of the TDC-GP30 are controlled by hard-wired configuration registers (CR) and system handling registers (SHR) in the random access memory area (RAA). For self-controlled applications the configurations are stored in the firmware data section FWD2 of the RAA. From there the configuration data is automatically copied into the direct mapped registers during a boot sequence. The various configuration registers and system handling registers are described in detail in section 7. The variable names are formatted in bold in this document for better reading.

In low power mode, the GP30 generally needs a 32.768 kHz oscillator to act as a continuously running clock (LSO). For time measurement the GP30 typically uses a high speed oscillator (HSO), typically featuring a 4 MHz ceramic resonator. The HSO is activated only for the short period of the measurement. In the same manner, the comparator and other analog elements are powered only for the short period of the measurement.

The low-frequency clock LSO is used as

- Base for the task sequencer cycle
- Base for the pulse interface
- Base for the time stamp
- Base for an initial UART baud rate of 4.800 baud

In self-controlled modes, the supervisor function block of TDC-GP30 fully controls the entire operation sequence. It determines cycle timing through the measurement rate generator (MRG), which triggers the task sequencer (TS). The task sequencer calls and coordinates the different tasks according to configuration.

The tasks themselves can be grouped as shown in the following table.

Table 3-2 GP30 Tasks

System tasks	▪ Initialization ▪ V_{CC} voltage measurement
Frontend measurement tasks	▪ Ultrasonic measurement (time-of-flight and/or amplitude measurement) ▪ Temperature measurement (external or internal)
Frontend calibration tasks	▪ Calibration of high-speed clock ▪ Calibration of amplitude measurement ▪ Calibration of comparator offset ▪ TDC Calibration (automatically)
Post processing	▪ Activation of CPU for any calculation through firmware
Remote communication initialization	▪ Sending out communication requests to initialize remote communication

The rate of measurement and calibration tasks can be configured, while initialization, post processing and communication are typically controlled by various flags which indicate the preceding measurement processes or resets. For example, post processing by the firmware typically depends on the flag register **SRR_FEP_STF**, it decides for flow or sensor temperature calculations according to the most recent measurements done. See section 7.5 for details on status and result registers. The following figure illustrates rate settings for various tasks.

Figure 3-3 Rate settings of various tasks

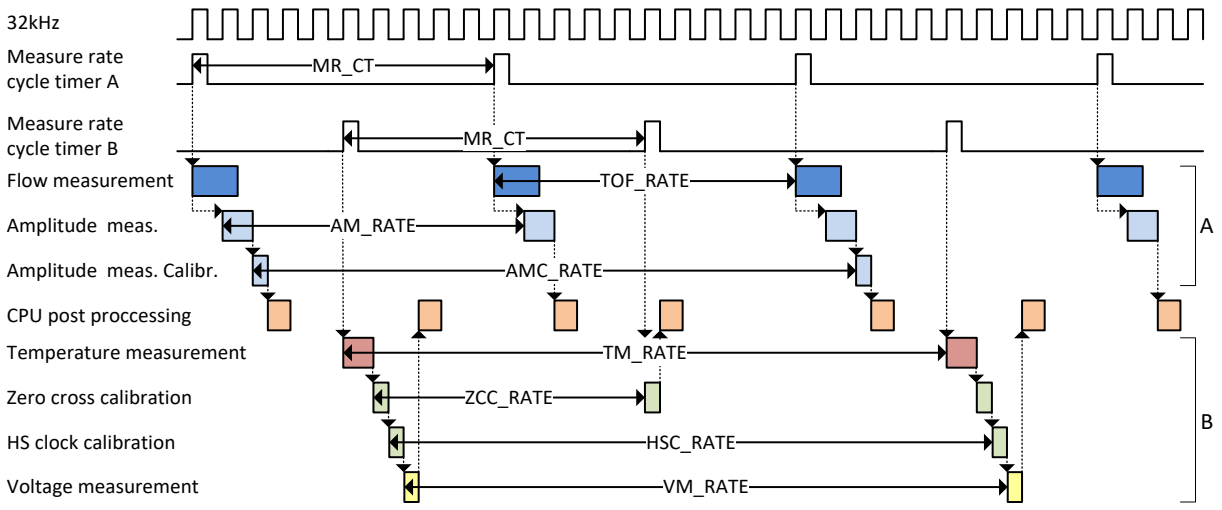

The most important parameters are set in configuration registers (**CR**, see section 7.3):

Register **CR_MRG_TS**, address 0xC6

- **MR_CT**: Task sequencer cycle time. The actual physical cycle time is t_{cycle} = **MR_CT*** 976.5625 µs [0, 1…8191]. The measurement rate generator triggers measurements in two alternating channels, one **MR_CT** (A) triggering the flow and amplitude measurement, the other one (B) triggering temperature and voltage measurement as well as the high speed clock (HSO) and the comparator offset calibration. Channel B triggers a half cycle time after channel A, to avoid mutual influences among the measurements.

Register: **CR_TM**, address 0xC7

- **TM_RATE**: Defines the number of sequence cycle triggers between sensor temperature measurements [0=off, 1, 2…1023].
  The sensor temperature measurement frequency is 1 / (t_{cycle} * **TM_RATE)**

Register: **CR_USM_AM**, address 0xCB

- **AM_RATE**: Defines the number of sequence cycle triggers between amplitude measurements [0=off, 1, 2, 5, 10, 20, 50, 100].
- **AMC_RATE** sets the number of amplitude measurements between amplitude calibration measurements [0=off, 1, 2, 5, 10, 20, 50, 100].

Register: **SHR_TOF_RATE**, address 0xD0
TOF_RATE: Defines the number of sequence cycle triggers between TOF measurements [0=off, 1…63]. The TOF measurement frequency is 1 / (t_{cycle} * **TOF_RATE)** Register **CR_CPM**, address 0xC5

- **HSC_RATE**: Defines the number of sequence cycle triggers between high-speed clock calibration measurements (4 MHz ceramic against 32.768 kHz quartz) [0=off, 1, 2, 5, 10, 20, 50, 100].
- **VM_RATE**: Defines the number of sequence cycle triggers between low battery detection measurements [0=off, 1, 2, 5, 10, 20, 50, 100].

The following sections describe the front end measurement tasks in more detail.

3.2 Ultrasonic Measurement

The measurement rate generator in channel A typically triggers the task sequencer (TS) for a complete sequence of flow measurement, starting with an ultrasonic time-of-flight (TOF) measurement, and – if desired – ending in front end processing which does all necessary calculations. .The TOF measurement is made up of the two time-of-flight measurements in up and down direction (in other words, against flow and with flow). The pause time between the two measurements can be configured in multiples of ¼ period of the base frequency (50 Hz or 60 Hz) in several steps, to optimize rejection of mains frequency distortions.

The time-of-flight measurement triggers the amplitude measurement. The GP30 can automatically toggle the measurement direction sequence between up /down- and down/up-measurement from cycle to cycle. This helps suppress errors caused by temperature drift.

Figure 3-4 Timing of the ultrasonic measurement with 20 ms pause interval (example)

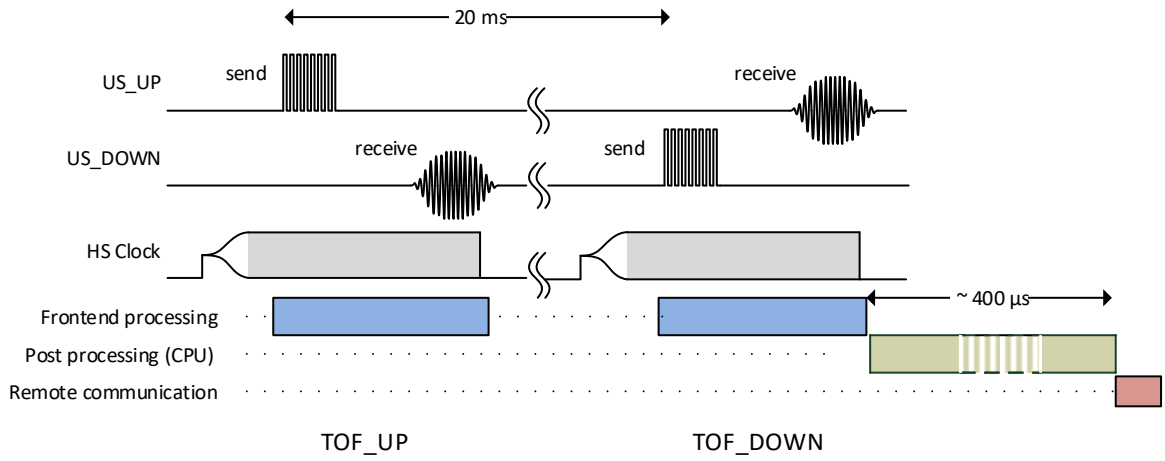

Important configuration parameters are:

Register **CR_CPM**, address 0xC5

- **HS_CLK_ST**: Settling time for the high-speed clock HSO, from 76 µs to 5 ms
- **BF_SEL**: Selection of base frequency (50 Hz/ 60 Hz) with period t_{base}

Register **CR_MRG**, address 0xC6

- **PP_EN**: Enables post-processing

Register **CR_USM_PRC**, address 0xC8

- **USM_TO**: sets the timeout for the TOF measurement [128 µs … 4096 µs]
- **USM_DIR_MODE**: defines start direction or the toggling of start direction
- **USM_PAUSE**: pause time between measurements [0=only one measurement, 2: 0.25* t_{base}, 3..7: 0.5..2.5* t_{base}]

Register **CR_USM_FRC**, address 0xC9

- **FPG_FP_NO**: number of fire pulses [1…128]
- **FPG_CLK_DIV**: HSO frequency divided by this factor +1 gives the actual frequency of the measurement signal (fire frequency)

Further important parameters configure the first wave detection and amplitude measurement as described in the following sections.

3.2.1 First Wave Detection

To do a time-of-flight measurement, the received signal needs to be identified and its arrival time needs to be measured thoroughly. This can be done by defining a first wave, and then counting subsequent waves and storing the relevant arrival times. This is elaborated in the following: The receive signal, typically a burst-like signal, is converted into a digital signal using an internal comparator. While receiving, the reference voltage of the comparator most of the time equals the zero line of the receive signal to identify zero crossings (Actually, the zero line is the overlaid reference voltage V_{ref}, and the comparator's reference is set to the zero cross detection level V_{ZCD}, which is calibrated to V_{ref}). This way, received wave periods are converted into digital hits. To determine an absolute numbering of the hits, a so-called first wave is defined by adding a well-defined voltage level, the first hit level (V_{FHL}), to the comparator's reference. This first wave detection, at a comparator level which differs from the zero cross level, is implemented to make the time-of-flight measurement independent from temperature and flow. The offset level V_{FHL} practically represents the level of receive signal at which the first wave is detected, which generates the first hit. After the first hit was detected, the comparator's reference is brought back to zero cross detection level (V_{ZCD}) at the 2nd hit, and the subsequent hit measurements are done at zero crossing. The following parameters define the first wave detection and the TOF hits:

- The trigger level **ZCD_FHL**, which defines the comparator offset level V_{FHL}
- The count number of the first subsequent TOF hit (TOF Start hit) which is actually measured
- The number of measured TOF hits
- The interval between measured TOF hits
- The TOF start hit delay: This delay disables hit detections for some defined lead time. This parameter is used as alternative to the first wave detection.

The diagram 3-5 below shows the measurement flow in TDC-GP30 first wave mode.

Starting the measurement with the comparator offset V_{FHL} different from zero, e.g. 100 mV, helps suppressing noise and allows the detection of a dedicated wave of the receive burst that can be used as reference. Once this first wave is detected, the offset is set back to the zero cross detection level V_{ZCD}. It is recommended to start actual TOF hit measurements after at least two more wave periods. The count number of the TOF start hit, the total number of TOF hits and the number of ignored hits between TOF hits are set by configuration. Ignored hits are in particular helpful when signal frequencies approaching half of the HSO frequency are used (e. q. 2 MHz signals when using a 4-MHz HSO). In such cases, the internal arithmetic unit is not fast enough to do all necessary calculations for each single hit, so at least every second hit must be ignored.

Figure 3-5 First wave detection

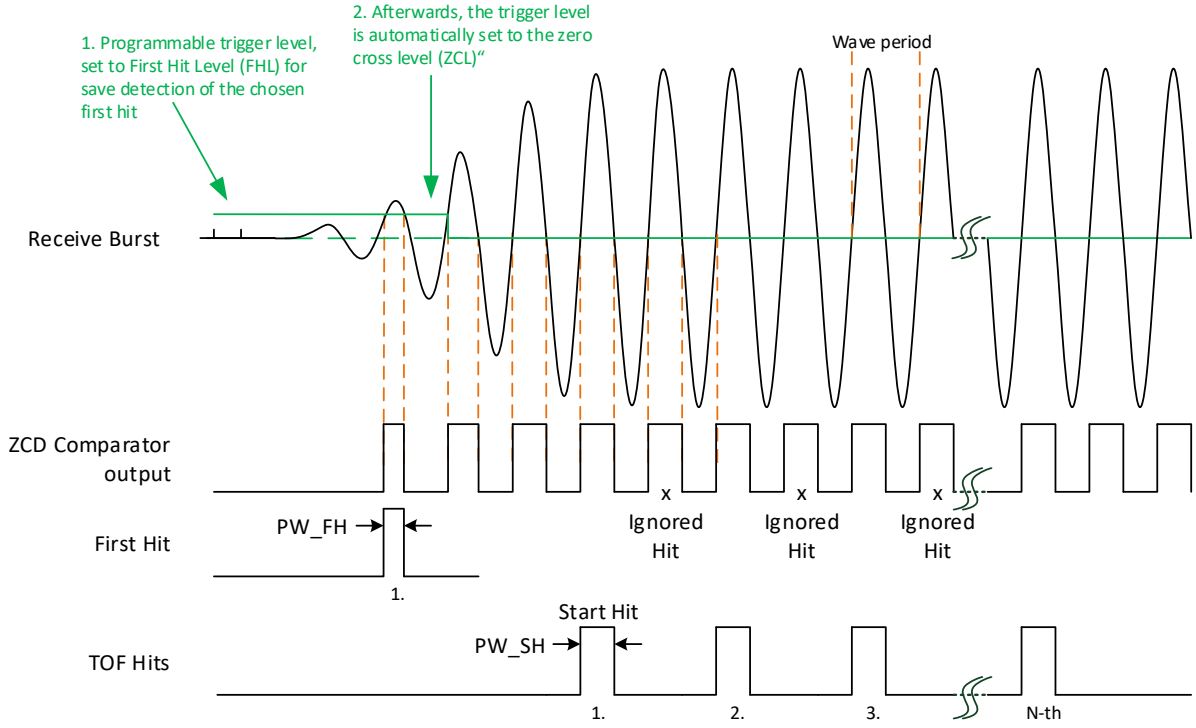

PW_FH = pulse width first hit, PW_SH = pulse width start hit

The important parameters are:

- **ZCD_LVL**: The zero cross detection level V_{ZCD} is automatically calibrated to the reference voltage level V_{ref}. This calibration should be configured to be repeated regularly (see section 7.4.8)

Register **CR_USM_PRC**, address 0xC8

- **USM_NOISE_MASK**: Opens the receive channel after a programmable delay, e.g. for noise suppression

Register **CR_USM_FRC**, address 0xC9

- **ZCD_FHL**: First hit level, offset to V_{ZCD}, to be set from -224 mV to +200 mV (typ.). The actual physical value is V_{FHL} = ± 0.88mV * **ZCD_FHL** (typ.; sign given by **ZCD_FHL_DIR**).
- **ZCD_FHL_DIR**: Offset sign positive or negative
- **ZCC_TS_RATE**: Configuring the offset calibration of the comparator

Register **CR_USM_TOF**, address 0xCA

- **TOF_HIT_NO**: Number of hits for the time-of-flight measurement [1…31]
- **TOF_HIT_IGN**: Number of waves ignored between the TOF measurements [0…3]
- **TOF_START_HIT_MODE**: Selects mode for TOF start hit
- **TOF_START_HIT_NO**: Number of waves counted after first detected hit which is defined as TOF start hit [2…31]

Register **SHR_TOF_START_HIT_DLY**

- **TOF_START_HIT_DLY**: Delay window after which the next detected hit is defined to TOF start hit. Starting time of the delay window refers to rising edge of 1st fire pulse (like stop masking in predecessor TDC-GP22, defined by DELVAL)

Like in TDC-GP22, the first wave detection is supported by a pulse width measurement option. Therefore the pulse width of the first hit, measured at the signal amplitude V_{FHL} (unequal to zero), is compared to the pulse width of the TOF start hit measured without offset at V_{ZCD}. The result is read as PWR = **PW_FH**/**PW_SH** and is typically < 1. The ratio PWR can be used to track V_{FHL}.

Register **CR_USM_AM**, address 0xCB

- **PWD_EN**: Enable the pulse width detection

3.2.2 Amplitude Measurement

A new feature in TDC-GP30 is a true amplitude measurement. The result is time data that reflect the amplitude of the receive burst. During operation the relative time information is fully sufficient for amplitude comparisons. The formula to calculate the amplitude in mV is given in the user manual DB_GP30_Vol3.pdf.

The features are:

- True peak amplitude measurement with every TOF (configurable)
- Highly reliable bubble and aging detection
- Very good consistency check in comparison to first wave detection
- Easy quality check in production and development
- Configurable number of hits to stop the amplitude measurement – this allows to measure the peak amplitude of each single wave at the start of the burst signal (but only one single value in each TOF measurement)

Figure 3-6 Amplitude measurement

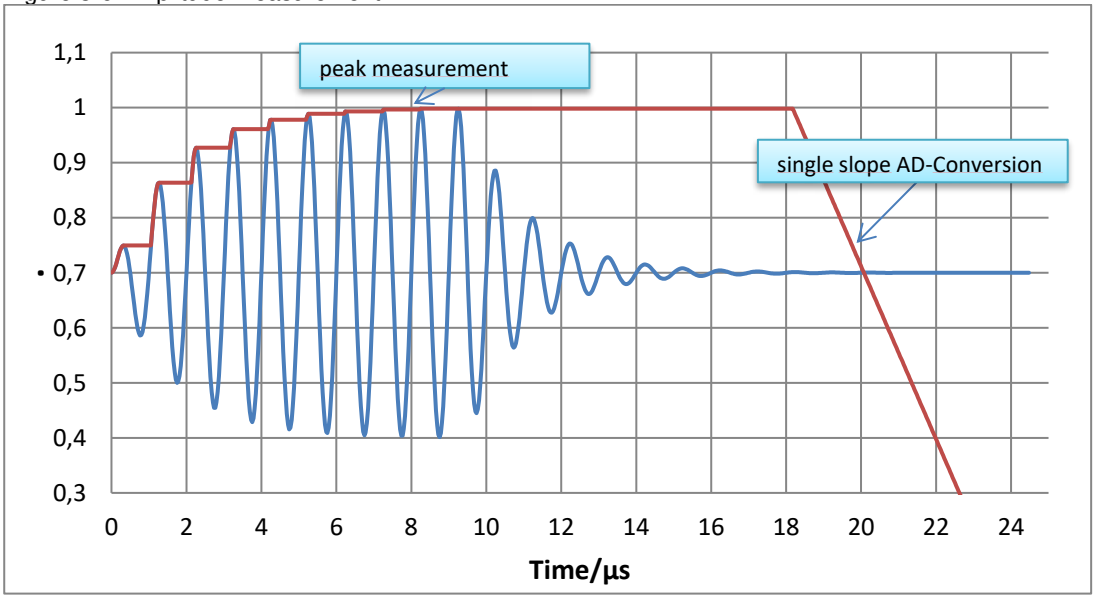

The most important parameters are:

Register **CR_USM_AM**, address 0xCB

- **AM_RATE**: Rate for amplitude measurement in sequence cycles [0=off, 1, 2, 5, 10, 20, 50, 100]
- **AM_PD_END**: Number of the wave when peak detection stops [0=off, 1…31]
- **AMC_RATE**: Calibration rate for amplitude measurement [0=off, 1, 2, 5, 10, 20, 50, 100]

3.2.3 Reading Ultrasonic Measurement Results

The GP30 measurement results are stored in a RAM section called front end data buffer (FDB). This section is used for flow measurement data and temperature measurement data alternately. Therefore, it is necessary to read the time-of-flight data directly after the end of a flow measurement and before the temperature measurement starts. The ultrasonic flow measurement stores the following results in the RAM section:

Table 3-3 Reading results from front end data buffer in the RAM

Name	RAA address	Description
FDB_US_TOF_ADD_ALL_U	0x080	Ultrasonic TOF UP, sum of all TOF hits, up direction
FDB_US_PW_U	0x081	Ultrasonic pulse width ratio, up direction
FDB_US_AM_U	0x082	Ultrasonic amplitude value, up direction
FDB_US_AMC_VH	0x083	Ultrasonic amplitude calibration value, high
FDB_US_TOF_ADD_ALL_D	0x084	Ultrasonic TOF DOWN, sum of all TOF hits, down direction
FDB_US_PW_D	0x085	Ultrasonic pulse width ratio, down direction
FDB_US_AM_D	0x086	Ultrasonic amplitude value, down direction
FDB_US_AMC_VL	0x087	Ultrasonic amplitude calibration value, low
FDB_US_TOF_0_U to … _7_U	0x088 to 0x08F	Ultrasonic TOF UP values 0 to 7, up direction
FDB_US_TOF_0_D to …_7_D	0x090 to 0x097	Ultrasonic TOF DOWN values 0 to 7, down direction

For debugging purposes, it is possible to read the individual TOF_up and TOF_down data for the first eight hits. Furthermore, the user can read the pulse width ratio PWR and the peak amplitude value AM for both directions.

Single TOF values (addresses 0x88 … 0x97) are only posted if **TOF_HITS_TO_FDB** is set in configuration register **CR_USM_TOF**.

TOF and amplitude measurement data are all times, given as 32-bit fixed point numbers with 16 integer bits and 16 fractional bits in multiples of the HSO period (typically 250 ns with 4 MHz HSO). So the meaning of the least significant bit is 1 LSB = 250 ns /2^{16} = 3.8146972 ps. Note that these values may need a further calibration step, depending on usage (see section 3.4.1)

The pulse width ratio PWR is an 8-bit fixed point number with 1 integer bit and 7 fractional bits. For example, PWR=0b01001101 means 0.6015625 in decimal.

3.3 Temperature Measurement

Precision temperature measurement is mandatory in heat meters. Therefore, for example external platinum sensors of 500 Ohm or 1000 Ohm are placed in the input stream (hot) and the output

stream (cold). In addition to the ultrasonic measurement interface, TDC-GP30 has a dedicated temperature sensor interface which permits measurements of such resistive sensors.

The resistance measurement of the temperature sensor interface is based on discharge time measurement, as known from acam's PICOSTRAIN chip family. A load capacitor C_{load},of typically100 nF capacitance (COG recommended), is discharged via the sensors and via a common reference resistor. GP30 supports 2-wire sensors and 4-wire sensors. The 2-wire sensors wiring is simpler, having one side at GND, but can't correct for additional line resistances and possibly changing contact resistances and thus demands a soldered connection.

The 4-wire connection corrects for the contact resistance and therefor can be used with plugs instead of solder connections. For details on the interface function and calibration, please refer to the user manual DB_GP30_Vol3.pdf.

Figure 3-7 2-wire temperature sensor setup

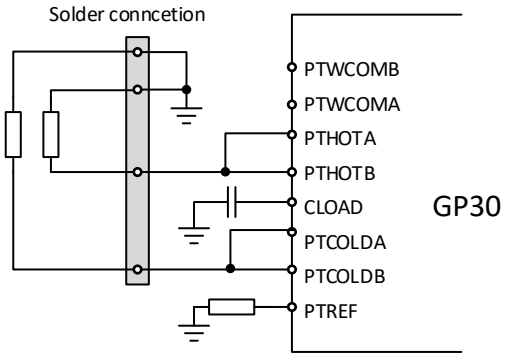

Figure 3-8: 4-wire temperature sensor setup

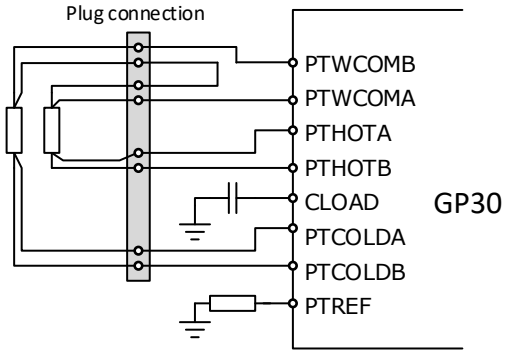

New in GP30 is the implementation of the PICOSTRAIN method for resistive sensors. This method adds internal compensation measurements to improve the temperature stability of the results. In two wire mode this results in 4 or 5 discharge cycles for actual resistance measurements. In 4 wire mode, the maximal number of discharge cycles for the measurement itself is 14. In both cases, 2 or 8 fake measurements need to be added for increased measurement accuracy. The measurement sequence is typically repeated with configurable pause time and order, such that each measurement is done twice in a cycle. The pause time can be configured in multiples of ¼ period of the base frequency (50 Hz or 60 Hz) in several steps, to optimize rejection of mains frequency distortions. Reversing the order of the measurements helps suppressing linear changes during a measurement sequence, by adding up the associated results pairwise.

In addition to the external measurement ports, a simple temperature sensor is also integrated in the chip. The interface can be configured to toggle between internal and external measurements, such that both options can be used alternatingly. For details on internal temperature measurement, please refer to the user manual DB_GP30_Vol3.pdf.

The following parameters are important for the configuration of the temperature measurement:

Register **CR_CPM**, address 0xC5

- **BF_SEL**: Selection of base frequency (50 Hz/ 60 Hz)

Register **CR_TM**, address 0xC7

- **TM_RATE**: Rate for temperature measurements in sequence cycles [0=off, 1…1023]
- **TM_PAUSE**: pause time between the two temperature measurement sequences [0=only one measurement, 2: 0.25* t_{base}, 3..7: 0.5..2.5* t_{base}]
- **TM_PORT_NO**: sets number of ports, 1 or 2
- **TM_WIRE_MODE**: selects between 2–wire and 4-wire modes
- **TM_FAKE_NO**: sets number of fake measurements, 2 or 8
- **TM_PORT_MODE**: 0 = pull-down for inactive ports, 1 = no pull own
- **TM_MODE**: 0 = internal, 1 = external, 2, 3 = toggling
- **TM_DCH_SEL**: selects the cycle time and therefore the discharge time limit, 512 µs or 1024 µs
- **TM_PORT_ORDER**: defines the order of the port switching (00: always default order, 01: always reversed, 10: 1st measurement: default order / 2nd measurement: reversed order, 11: vice versa

Figure 3-9 C_{load} discharge cycles, 2-wire mode (schematic)

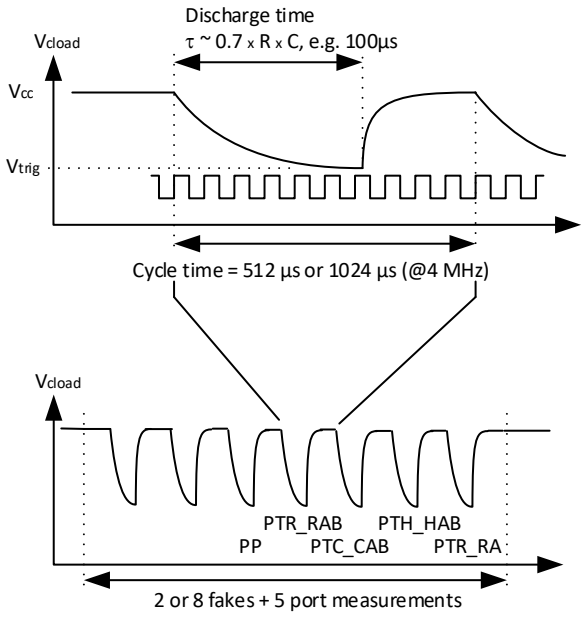

3.3.1 Reading Temperature Measurement Results

After a temperature measurement, the discharge times can be read from the following RAM addresses. **Note:** Those RAM cells are used also by the TOF measurements. Therefore data must be read before the next TOF measurement. For details on measurement description, switch setting and calibration calculation, please refer to the user manual DB_GP30_Vol3.pdf.

Table 3-4 Reading temperature measurement data from front end data buffer in the RAM

RAA Address	Name	Description
0x080	***FDB_TM_PP_M1***	Schmitt trigger delay Compensation Value
0x081	***FDB_TM_PTR_RAB_M1***	PT Ref: Discharge Time Value
0x082	***FDB_TM_PTC_CAB_M1***	PT Cold: Discharge Time Value
0x083	***FDB_TM_PTH_HAB_M1***	PT Hot: Discharge Time Value
0x084	***FDB_TM_PTR_RA_M1***	PT Ref: 1st Rds(on) correction Value
0x085	***FDB_TM_PP_M2***	Schmitt trigger delay Compensation Value
0x086	***FDB_TM_PTR_RAB_M2***	PT Ref: Discharge Time Value
0x087	***FDB_TM_PTC_CAB_M2***	PT Cold: Discharge Time Value
0x088	***FDB_TM_PTH_HAB_M2***	PT Hot: Discharge Time Value
0x089	***FDB_TM_PTR_RA_M2***	PT Ref: 1st Rds(on) correction Value
0x08A	***FDB_TM_PTR_4W_RB_M1***	PT Ref: 2nd Rds(on) correction Value
0x08B	***FDB_TM_PTC_4W_CA_M1***	PT Cold: 1st Rds(on) correction Value
0x08C	***FDB_TM_PTC_4W_CB_M1***	PT Cold: 2nd Rds(on) correction Value
0x08D	***FDB_TM_PTC_4W_AC_M1***	PT Cold: 3rd Rds(on) correction Value

0x08E	*FDB_TM_PTC_4W_BC_M1*	PT Cold: 4th Rds(on) correction Value
0x08F	*FDB_TM_PTH_4W_HA_M1*	PT Hot: 1st Rds(on) correction Value
0x090	*FDB_TM_PTH_4W_HB_M1*	PT Hot: 2nd Rds(on) correction Value
0x091	*FDB_TM_PTH_4W_AH_M1*	PT Hot: 3rd Rds(on) correction Value
0x092	*FDB_TM_PTH_4W_BH_M1*	PT Hot: 4th Rds(on) correction Value
0x093	*FDB_TM_PTR_4W_RB_M2*	PT Ref: 2nd Rds(on) correction Value
0x094	*FDB_TM_PTC_4W_CA_M2*	PT Cold: 1st Rds(on) correction Value
0x095	*FDB_TM_PTC_4W_CB_M2*	PT Cold: 2nd Rds(on) correction Value
0x096	*FDB_TM_PTC_4W_AC_M2*	PT Cold: 3rd Rds(on) correction Value
0x097	*FDB_TM_PTC_4W_BC_M2*	PT Cold: 4th Rds(on) correction Value
0x098	*FDB_TM_PTH_4W_HA_M2*	PT Hot: 1st Rds(on) correction Value
0x099	*FDB_TM_PTH_4W_HB_M2*	PT Hot: 2nd Rds(on) correction Value
0x09A	*FDB_TM_PTH_4W_AH_M2*	PT Hot: 3rd Rds(on) correction Value
0x09B	*FDB_TM_PTH_4W_BH_M2*	PT Hot: 4th Rds(on) correction Value

Values with names ending in **M2** come from the repeated measurements. They remain unchanged when no second measurement is done (**TM_PAUSE** = 0). Letters before the measurement number indicate active port (**R**ef., **C**old and **H**ot, **A** or **B**; preceeding **A** or **B** means ground port switched). The values at the shaded addresses (0x08A – 0x09B) are only posted if **TM_WIRE_MODE** is set to 4-wire in **CR_TM.**

Temperature measurement data is all times given as 32-bit fixed-point numbers with 16 integer bits and 16 fractional bits in multiples of the HSO period (250 ns with 4 MHz HSO).

So the meaning of the least significant bit is 1 LSB = 250 ns /2^{16} = 3.8146972 ps.

For 2-Wire measurements, simple calibration calculations yield corrected resistance values:

Reference resistor $t_R = t_{RAB} - t_{RO} - \Delta t$

Cold sensor $t_C = t_{CAB} - {}^{t_{RO}}/_{2} - \Delta t$

Hot sensor (3-port case) $t_H = t_{HAB} - {}^{t_{RO}}/_{2} - \Delta t$

A good approximation gives for the Schmitt trigger delay compensation $\Delta t = 2t_{PP} - 2\frac{t_{CAB}\, t_{RAB}}{t_{CAB}+t_{RAB}}$ and for the R_{ds}(on) correction (the correction of switch resistances) $t_{RO} = t_{RA}$-t_{RAB} .
Note that the Schmitt trigger delay compensation requires a measurement of the cold sensor. In case one sensor may be optional, always use the hot sensor for the optional one.

With the known reference resistor value R_{REF} we then get the

Cold sensor resistance: $R_C = R_{REF}\,\frac{t_C}{t_R}$

Hot sensor resistance (3-port case): $R_H = R_{REF}\,\frac{t_H}{t_R}$

When a PT sensor of resistance R_0 is used, the actual temperature may be derived from the corrected resistance using the following simplified approximation

$$T/°C = C_2 * \left(\frac{R}{R_0}\right)^2 + C_1 * \left(\frac{R}{R_0}\right) + C_0$$

Note that $R/R_0 = (R/R_{REF})/(R_0/R_{REF})$, so the argument can as well be the relative resistance, depending on knowledge of R_0 or R_0/R_{REF} from calibration. Using the coefficients $C_2 = 10.115$, $C_1 = 235.57$ and $C_0 = -245.683$, the approximation is valid in the range 0°C to 100 °C with less than 3 mK deviation from the normed polynomial for PT's (see IEC 60751:2008)

A simpler linear approach would be:

$T_C = T_0 + (R_C - R_{PTC})/R_{REF}/S_{PTC}$ $\qquad$ $T_H = T_0 + (R_H - R_{PTH})/R_{REF}/S_{PTH}$

T_0 is temperature at a calibration point, e.g. 20 °C, and R_{PTC} and R_{PTH}, respectively, are the sensor resistances at calibration temperatures. The gain S_{PTC} or $S_{PTH}$is the sensitivity of the sensor, e.g. 3850 ppm for platinum. This simple equation is valid in the range 0 °C to 100 °C with about 250 mK deviation from the normed polynomial for PT's.

Both, polynomial and linear calculation are supported by ROM routines. See volume 2, ***ROM_TEMP_POLYNOM*** and ***ROM_TEMP_LINEAR_FN.***

3.4 Chip level calibrations

TDC-GP30 features calibration functions on chip level which make the chip widely independent of tolerances and aging effects. Most chip level calibrations are enabled through measurements that are done performed as configurable frontend tasks. Of course, any other desired calibration like flow or temperature calibration of the whole measurement system can be implemented in a suitable firmware. In contrast, the following chip level calibrations are already supported by dedicated hardware functions:

- Calibration of high-speed clock
- Calibration of amplitude measurement
- Calibration of comparator offset
- TDC Calibration (automatically)

3.4.1 Calibration of high-speed clock

In the majority of applications, it makes sense to use for the high speed clock HSO a ceramic resonator, with (in comparison to a crystal) low quality factor. Then the overall current consumption is reduced by switching on the HSO only when needed (during any TDC or TOF measurement). The low quality factor permits low settling times for the HSO. Of course, in consequence the accuracy and long term stability of the HSO is worse than with a crystal. The appropriate solution is to calibrate the HSO regularly against the stable high-quality, but low power LSO. To enable this calibration, TDC-GP30 measures four periods of the LSO with the TDC, which is always referred to the instantaneous HSO period (see section 3.4.4). The measurement result can be used to re-calculate TDC time data to refer to the higher accuracy of the LSO. While the calibration

measurement is supported by GP30, the re-calculation and correction of TDC results has to be done by the user according to his needs. This happens typically in a firmware.

HSO calibration is done at a rate defined in:

Register **CR_CPM**, address 0xC5

- **HSC_RATE**: Defines the number of sequence cycle triggers between high-speed clock calibration measurements (4 MHz ceramic against 32.768 kHz quartz) [0=off, 1, 2, 5, 10, 20, 50, 100].

The resulting measurements are then stored as raw TDC values in:

0x0E4	**SRR_HCC_VAL**	High-Speed Clock Calibration Value

The measured value corresponds to four LSO periods in terms of raw TDC values (HSO-periods in fd16). For example, the nominal value for f_{HSO} = 4 MHz and f_{LSO} = 32.768 kHz would be 0x01E8 4800 (488.28125 in decimal numbers). From the actual value in **SRR_HCC_VAL** and the ideal value, a calibration factor can be derived such that corrected TDC result values are calculated as

$$(corrected\ TDC\ result) = (raw\ TDC\ result) * \frac{4 f_{HSO,nom.}}{\mathbf{SRR_HCC_VAL} * f_{LSO,nom.}}$$

This calculation is not implemented in hardware and has to be done whenever needed. It is not necessary when only ratios of results are of interest, for example in sensor temperature measurements. It is of interest when precise actual time values are needed, for example when calculating flow from TOF measurements.

3.4.2 Calibration of amplitude measurement

The amplitude measurement is done by a single slope AD-conversion of a stored peak amplitude value. In practice, this means a sample & hold detector stores the amplitude peak value during the measurement interval (between the first wave and the configured end of the measurement) in a capacitor. Then this capacitor is discharged at constant current down to V_{ref}, which yields a discharge time measured by the internal TDC.

The amplitude measurement is calibrated against two reference level measurements at nominal offset levels of V_{ref} and V_{ref} /2, respectively. From these two reference time measurements, slope and offset of the calibration curve can be calculated, which permits to calculate actual amplitudes from the measured peak amplitudes. The rate and interval length of amplitude measurements, and the rate of calibrations is defined in:

Register **CR_USM_AM**, address 0xCB

- **AM_RATE**: Rate for amplitude measurement in sequence cycles [0=off, 1, 2, 5, 10, 20, 50, 100]
- **AM_PD_END**: Number of the wave when peak detection stops [0=off, 1…31]
- **AMC_RATE**: Calibration rate for amplitude measurement per amplitude measurement [0=off, 1, 2, 5, 10, 20, 50, 100]

The resulting measurements are then stored as raw TDC values in:

Name	RAA address	Description
FDB_US_AM_U	0x082	Ultrasonic amplitude value, up direction
FDB_US_AMC_VH	0x083	Ultrasonic amplitude calibration value, high
FDB_US_AM_D	0x086	Ultrasonic amplitude value, down direction
FDB_US_AMC_VL	0x087	Ultrasonic amplitude calibration value, low

It is, however, not necessary to calculate actual amplitudes since the measured time values themselves can be used for relative amplitude comparison. In this case, the calibration values are used in reverse way to derive time values, for example from given limits, for amplitude comparison. For details please refer to the user manual DB_GP30_Vol3.pdf.

While the amplitude measurement is repeatable and stabilized through calibration, it is still not a high-precision measurement. It has a minimal measurement level above V_{ref} which is given by an offset of some mV. In the final measurement result another offset of a few mV typically remains. And, since amplitude measurement always starts at the first wave, it should be clear that the result can never be smaller than the first hit detection level V_{FHL}.

3.4.3 Calibration of comparator offset

The zero line of the receive signal is structurally given by the hard-coded V_{ref} level (typically 0.7 V). The zero cross detection level V_{ZCD} is the corresponding reference level of the comparator and is defined in register **SHR_ZCD_LVL**. To ensure that the comparator correctly detects zero crossings of the signal, V_{ZCD} has to be calibrated to V_{ref} regularly – basically this compensates the offset of the comparator. The calibration is automatically done once after power-on, and then at a rate defined in: Register **CR_USM_FRC**, address 0xC9

- **ZCC_TS_RATE**: Configuring the rate of offset calibration of the comparator

The calibration automatically updates the value in **SHR_ZCD_LVL**, such that the user does not need to take any action. Note that the value in **SHR_ZCD_LVL** may be changed by the user, but such changes are overwritten by the next comparator offset calibration.

3.4.4 TDC calibration (automatically)

The TDC measures time using a fast ring oscillator with fine time resolution. This ring oscillator is automatically calibrated against the HSO at the beginning of every TDC measurement. This results in time data from the TDC which is automatically referred to HSO periods – raw TDC values are always given as 32 bit numbers, where the first 16 bit are full HSO periods (typically 250 ns), the lower 16 bit are the corresponding fractions (LSB is typically 3.8 ps). The user does not need to care about this calibration. However, the HSO uses typically a ceramic resonator and needs in this case calibration against the crystal LSO. This changes the absolute time data of the TDC, see section 3.4.1.

4 Special Service Functions

4.1 Watchdog

After a system reset the watchdog of GP30 is enabled. After a watchdog time of roughly 13 s, the watchdog resets the chip if its timer is not being cleared before. This is typically done by the firmware using the command clrwtd, such that a system reset happens whenever the firmware skips clearing the watchdog (for any reason). Watchdog time is based on a not stabilized internal oscillator clock source of 10 kHz.

For operation in time conversion mode, it can be useful to disable the watchdog of GP30. For that a special code should be written to register **CR_WD_DIS**.

Disable Watchdog		
WR	**WD_DIS** = 0x 48DB_A399	Disables GP30 watchdog
	WD_DIS ≠ 0x 48DB_A399	Enables GP30 watchdog

4.2 Time Stamp (RTC)

The time stamp function is an elapsed time counter with an additional register for latching counter value. The latched time stamp can be read via two registers, representing hours, minutes & seconds.

In configuration register **CR_CPM** the user defines the mode of how the timestamp is updated:

TSV_UPD_MODE: = 0: Timestamp updated by setting bit **TSV_UPD** in register **SHR_EXC**
= 1: Timestamp automatically update with every second

TSV_UPD: = 0: No action
= 1: Update Time Stamp Value

The actual timestamp can be read from the following status registers:

SRR_TS_HOUR	Bits 17:0	**TS_HOUR**,	1 LSB = 1 hour
SRR_TS_MIN_SEC	Bits 15:8	**TS_MIN**,	1 LSB = 1 minute
	Bits 7:0	**TS_SEC**,	1 LSB = 1 second

4.3 Backup

Backup handling in GP30 can optionally be performed via firmware in the integrated CPU and an external EEPROM.

Please refer to the user manual volume 3 for details about this special function.

4.4 Clock Management

GP30 is equipped with pins for two external clock sources. A low speed clock (LSO, typically 32.768 kHz) is made up by connecting a resonator at pins XIN_32KHZ & XOUT_32KHZ, and a high speed clock (HSO, typically 4 or 8 MHz) via pins XIN_4MHZ & XOUT_4MHZ. Alternatively, active external clocks may be fed into the XOUT pins (XIN must be grounded then).

Following clock operating modes can be distinguished:

- Low Power Mode
- Single Source Clocking Mode

4.4.1 Low Power Mode

Typically the GP30 operates in low power mode. In this mode the internal low speed clock LSO is made up by a quartz crystal resonator connected to pins XIN_32KHZ & XOUT_32KHZ. The high speed clock HSO, made up by a ceramic resonator on pins XIN_4MHZ & XOUT_4MHZ, is activated by internal control only when needed for measurement.

To support ultrasonic transducers with a frequency of up to 4MHz, the GP30 can also be sourced with a high speed clock of 8 MHz (Note: not suitable with UART).

Compared to a quartz, a ceramic resonator with lower quality factor has the benefit of a short settling time, which saves power consumption of GP30. On the other hand the HSO needs to be calibrated against the more stable LSO regularly in this case. This calibration can be triggered by the task sequencer or by an external command.

Important register

CR_CPM	0x0C5	**HS_CLK_ST**: Defines settling time for high speed clock **HS_CLK_SEL**: Defines the frequency of high speed clock **HSC_RATE**: Defines repetition rate for high speed clock calibration task

HSC_RATE sets the high-speed clock calibration rate. 0 turns it off, higher values set the clock calibration every 2nd / 5th / 10th / 20th / 50th / 100th cycle trigger.
HS_CLK_SEL selects between a 4 MHz clock and an 8 MHz clock. After a reset this is automatically set. For initial communication or operating in time conversion mode HS_CLK_SEL in SHR_RC has to be set actively by the user.

HCC_UPD: High-Speed Clock Calibration Update (see section 3.4.1)

0: No update in **SRR_HCC_VAL**

1: Updated value in **SRR_HCC_VAL**

Status register:

0x0E4	**SRR_HCC_VAL**	High-Speed Clock Calibration Value

The low speed clock can be sourced by a quartz or directly by an oscillator clock.

Table 4-1 Oscillator pins in low power mode

Pin name	Clock source is passive quartz	Clock source is external oscillator
LP_MODE	Not connected or connected to V_{CC}	
XIN_32KHZ	Connected to a quartz crystal resonator (32.768 kHz)	Connect to GND
XOUT_32KHZ		Connected to an oscillator clock (32.768 kHz)

XIN_4MHZ	Connected to a ceramic resonator (4 or 8 MHz)
XOUT_4MHZ	

Connecting XIN_32KHZ & XOUT_32KHZ with a quartz:

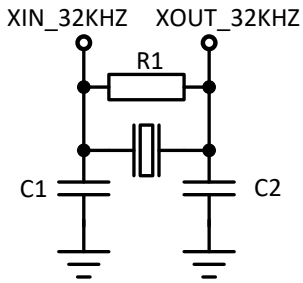

R1 = 10 MΩ
C1, C2 = 10 pF

f(Quartz)= 32.768 kHz

Connecting XIN_4MHZ & XOUT_4MHZ with a resonator:

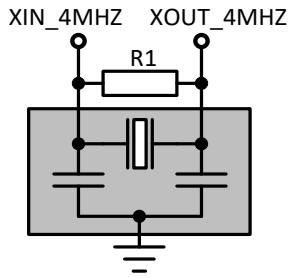

R1 = 560 kΩ

f(Resonator)= 4 or 8 MHz

4.4.2 Single Source Clocking Mode

This mode is not recommended for applications where low power is needed. In single source clocking mode, no external low speed source is needed. The internal low speed clock is derived from high speed clock and is provided with a frequency of 32 kHz. For this reason the high speed clock is enabled all the time.

Note: **In this mode, Timestamp Counter, General Purpose Counter und Recall/Checksum Counter are disabled.**

The high speed clock can be sourced by an external quartz.

Table 4-2 Oscillator pins in single source clocking mode

Pin name	Clock source is passive quartz
LP_MODE	Connected to GND
XIN_32KHZ	Connected to GND
XOUT_32KHZ	Left unconnected
XIN_4MHZ	Connected to a quartz (4 or 8 MHz)
XOUT_4MHZ	

Connecting XIN_4MHZ & XOUT_4MHZ with a quartz:

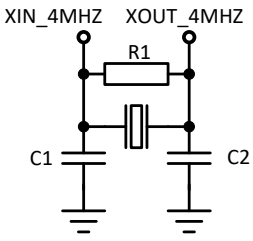

R1 = 150 kΩ

C1, C2 = 10 pF

f(Quartz) = 4 or 8 MHz

4.5 Power Supply

4.5.1 Supply voltage

GP30 is a high-end mixed analog/digital device. Good power supply is mandatory for the chip to reach full performance. It should be highly capacitive and of low inductance.

Figure 4-1

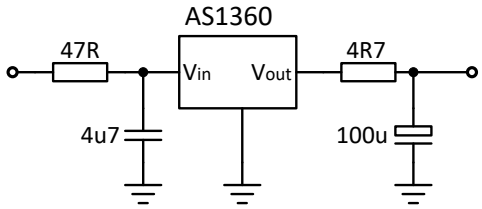

Low series resistance from the same source should be applied to all VCC pins, even though all VCC pins are internally connected. All ground pins should be connected to a ground plane on the printed circuit board. The supply voltage should be provided by a battery or fixed linear voltage regulator. Do not use switched regulators, to avoid disturbances caused by the add-on noise of this type of regulator. The chip can also be driven directly with battery voltage – due to the wide operation voltage range, there is no need to regulate operation voltage for the GP30 to some fixed value..

The measurement quality of a time-to-digital converter depends on good power supply. Due to its cyclic short-time operations, the chip draws strongly pulsed instantaneous operation currents, and therefore sufficient bypassing is mandatory:

Recommendations:

VCC	68 to 100 µF
VDD18_IN	22 µF

4.5.2 Current consumption

The current consumption of the total system is a very important parameter for heat and water meters. The demands are higher especially for water meters because the measurement rate needs to be higher. A typical measurement rate for a water meter should be in the range of 6 to 8 Hz. The architecture of the GP30 is especially designed to reach an extremely low operating current to allow the use of small battery sizes like 2/3 AA or AA cells.

In the following tables, data for average operating current is given at V_{CC} = 3.0 V and an environment temperature of 25 °C. At V_{CC} = 3.6 V the current will increase by a constant offset of roughly 2 µA. In the extreme case of V_{CC} = 3.6 V and an environment temperature of 85 °C, the additional current offset caused by voltage and temperature will be typically 11uA. Furthermore, any communication over serial interface or pulse interface will increase current consumption according to the current drawn on the interface lines. The current consumption is the sum of the various parts and can be estimated in the following manner:

Table 4-3 Current calculation (V_{CC} = 3.0 V, environment temperature 25 °C, no communication)

Stand-by current	$I_{Standby}$		1.8 V LVDO (~ 1 µA), 32 kHz oscillator and timer and control functions driven by the 32 kHz oscillator	2.2 µA
Average Operating current	I_o	I_{tmu}	Analog frontend: This is the current for a complete TOF_UP/TOF_DOWN measurement into the time measuring unit, the front end and the 4 MHz oscillator. The value depends on the configuration, TOF_RATE=1.	0.42 µA @ 1 Hz
		I_{cpu}	CPU current: Complete calculation of the flow measurement of a TOF_UP/TOF_DOWN time pair, including all necessary tasks (plausibility checks, flow calculation, temperature calculation, non-linear correction, etc.). The value depends on the configuration and firmware complexity.	0.39 µA @ 1 Hz
		I_T	The current (charge) for a complete temperature measurement is typ.2.5 µAs with two PT1000 in two-wire connection. In heat meters the temperature is measured typically once every 30 seconds.	0.158 µA @ 1/30 Hz

While Heat meters typically run with 2 Hz, in water meters a higher measurement rate of 6 to 8 Hz is desirable. Intelligent software will also take care of zero flow situations when the measurement rate can be reduced. The table below uses as example a time share of 90% of zero flow..

The following table shows the estimated current consumption in different applications:

Table 4-4 Current consumption examples (measured values @ V_{CC} = 3.0 V, environment temperature 25 °C)

Heat meter	2 Hz measure rate + 2 external temperature sensors	With flow and temperature measurement every 30 s.	3.9 µA
Water meter	2 Hz measure rate	Zeroflow	3.8 µA
	8 Hz measure rate	With flow	8.5 µA
	8 Hz with flow (10% of operating time), 2 Hz with no flow (90% of operating time)	0.1 x 8.5 µA + 0.9 x 3.8 µA	4.3 µA

4.6 Voltage Measurement

The voltage measurement is the only measurement task which is performed directly by the supervisor and not by frontend processing. It's automatically executed if **VM_RATE** > 0. The value of V_{CC} is measured and can be compared to a low battery threshold.

Important registers

CR_CPM	0x0C5	**VM_RATE**: Defines repetition rate for voltage measurement task **LBD_TH**: Defines the low battery threshold
SRR_VCC_VAL	0x0E5	Value of V_{CC} can be read out from here

5 Remote Port Interfaces

The GP30 is able to operate in **flow meter mode** or in **time conversion mode**.

In flow meter mode a remote port interface is needed to program the GP30. In time conversion mode a remote port interface is needed to configure and for measurement related communication with the GP30. The remote port interface can be selected as an **SPI** or as a **UART** interface by the pin UART_SEL. The function of the five remote port pins depends on the port selection:

Pin Name	SPI	UART
UART_SEL	0	1
SSN_GPIO2	SSN [I]	GPIO2 [IO] (not used by UART)
MOSI_GPIO3	MOSI [I]	GPIO3 [IO] (not used by UART)
SCK_RXD	SCK [I]	RXD [I]
MISO_TXD*	MISO [O]	TXD [O]
INTN_DIR	INTN [O]	DIR [O]

*Pin MISO_TXD must be grounded over 3.3 MΩ to avoid undefined logic levels in high *Z* state

5.1 SPI Interface

The SPI interface of the GP30 is able to operate as a slave in a multi-slave SPI bus working in SPI mode 1. Pin MISO_TXD is in high *Z* state when the chip is not communicating.

SPI mode 1 (CPOL = 0, CPHA = 1) is defined as follows:

- Idle State of SCK is LOW
- Data is sent in both directions with rising edge of SCK
  Data is latched on both sides with falling edge of SCK

Slave select (SSN) and slave interrupt (INTN) are low active.

5.2 UART Interface

The GP30 can also use a universal asynchronous receive/transmit interface. This is mainly used for data transfer via long cables. This UART always works in half duplex. Remote requests from external controller are always acknowledged by the GP30. Also, the GP30 is able to send messages by itself.

UART - Framing

- Little endian: LSB (least significant bit) und LSByte (least significant byte) first
- Inter byte gap needed
- Incremental write & read to memories

UART CRC Generation

- Default Polynomial: $X^{16} + X^{12} + X^{5} + 1$ (CRC16-CCITT)
- Data byte & CRC in reverse order (little endian)
- Initial Value: 0xFFFF
- User definable CRC polynomial

UART –Error handling (see section 5.4.9)

- Wrong CRC (cyclic redundancy check)
- Collision handling
- Unknown commands
- Inter-byte gap too large
- Wrong start or stop bit

UART Messaging Mode

The UART can be configured to operate in a messaging mode, transferring measurement results, triggered by measure cycle or by firmware decision. Optionally a wakeup byte can be send before a message is transferred.

UART Baud Rates

The GP30 is able to operate with a low baud rate (4,800 baud) or one of 4 different high baud rates of up to 115,200.

The baud rate can be changed with the baud rate command by the remote control. Before changing to a new baud rate, the remote control first has to receive an acknowledge message from the GP30 with the current baud rate.

A low baud rate is typically used for

- Initial communication

A high baud rate is typically used for

- Programming firmware code & data to GP30
- Messaging measurement results in flow meter mode

The baud rate generation in GP30 can be derived from low speed clock frequency f_{LSO} (32.768 kHz) or high speed clock frequency f_{HSO} (4 MHz).

For baud rates which are derived from HSO, this clock has to be activated by writing 0b10 to HSO_MODE in **SHR_RC** register before starting remote communication with new baud rate. For messaging mode the baud rate can be separately configured to operate in a high baud rate.

	Baud Rate Command	**32.768 kHz**	**4 MHz**	**Baud Rate**
Low Baud Rate	RC_BRC_LOW	supported	supported	4800
High Baud Rate	RC_BRC_H00	not supported		19200
	RC_BRC_H01			38400
	RC_BRC_H10			57600
	RC_BRC_H11			115200

5.3 Remote Communication (Opcodes)

A remote control always starts communication with the GP30 by sending a remote command RC_xx_xx (see the list of possible commands in section 5.4) as the first byte of a remote request, independently from the selected interface. In case of the UART a 2-byte CRC follows. This is always followed by an acknowledge of the GP30 with a 2-byte CRC included. Acronyms:

RC_....	Remote Command	(1 Byte)
RAA_ADR	Random Access Area Address	(1 Byte)
RAA_BL	Random Access Area Block Length	(1 Byte)
RAA_WDx_Bx	Random Access Area Write Data	(4 Bytes)
RAA_RDx_Bx	Random Access Area Read Data	(4 Bytes)
FWC_ADR	FW Code Memory Address	(2 Bytes)
FWC_BL	FW Code Memory Block Length	(1 Byte)
FWC_WDx_Bx	FW Code Memory Write Data	(1 Byte)
MD_LEN	Message Data Length	(1 Byte)
MD_Bx	Message Data	(4 Bytes)
MC_	Message Command	(1 Byte)
CRC	Cyclic Redundancy Check	(2 Bytes)

5.4 Opcodes

5.4.1 Resets & Inits

Remote Command	Code	SPI	UART	Description
RC_SYS_RST	0x99	X	X	Resets GP30 completely
RC_SYS_INIT	0x9A	X	X	Resets whole GP30 without configuration registers
RC_CPU_INIT	0x9B	X	X	Resets CPU
RC_SV_INIT	0x9C	X	X	Resets Supervisor
RC_FEP_INIT	0x9D	X	X	Resets Frontend Processing

SPI		
Remote request		**Answer**
Command	RC_xxx	

UART			
Remote request		**GP30 Acknowledge**	
Command	RC_xxx		
CRC	CRC_B0		
	CRC_B1		
		Command	RC_xxx
		CRC	CRC_B0
			CRC_B1

5.4.2 Memory Access

Remote Command	Code	SPI	UART	Description
RC_RAA_WR	0x5A 0x5B	X	X	Write to RAM or register area Write to FW data area (NVRAM)
RC_RAA_RD	0x7A 0x7B	X	X	Read from RAM or register area Read from FW data area (NVRAM)
RC_FWC_WR	0x5C	X	X	Write to FW code area (NVRAM)

The least significant bits of remote commands RC_RAA_WR, RC_RAA_RD correlate to the most significant bit of the RAA address RAA_ADR[8]. RAA_ADR[7:0] are defined in a separate address byte.

5.4.3 RAA Write (in blocks, x = 0 to 127)

SPI		
Remote request		**Answer**
Command	RC_RAA_WR	
Address	RAA_ADR	
Write data	RAA_WD0_B3	
	RAA_WD0_B2	
	RAA_WD0_B1	
	RAA_WD0_B0	
	RAA_WD1_B3	
	…	
	RAA_WDx_B0	

UART			
Remote request		**GP30 Acknowledge**	
Command	RC_RAA_WR		
Address	RAA_ADR		
Length	RAA_BL		
Write data	RAA_WD0_B0		
	RAA_WD0_B1		
	RAA_WD0_B2		
	RAA_WD0_B3		
	RAA_WD1_B0		
	…		
	RAA_WDx_B3		
CRC	CRC_B0		
	CRC_B1		
		Command	RC_RAA_WR
		CRC	CRC_B0
			CRC_B1

5.4.4 RAA Read (in blocks, x = 0 to 127)

SPI			
Remote request		**Answer**	
Command	RC_RAA_RD		
Address	RAA_ADR		
		Read data	RAA_RD0_B3
			RAA_RD0_B2
			RAA_RD0_B1
			RAA_RD0_B0
			RAA_RD1_B3
			…
			RAA_RDx_B0

UART			
Remote request		**GP30 Acknowledge**	
Command	RC_RAA_RD		
Address	RAA_ADR		
Length	RAA_BL		
CRC	CRC_B0		
	CRC_B1		
		Command	RC_RAA_RD
		Length	RAA_BL
		Read data	RAA_RD0_B0
			RAA_RD0_B1
			RAA_RD0_B2
			RAA_RD0_B3
			RAA_RD1_B0
			…
			RAA_RDx_B3
		CRC	CRC_B0
			CRC_B1

5.4.5 FWC Write (in blocks, x = 0 to 127)

SPI		
Remote request		**Answer**
Command	RC_FWC_WR	
Address	FWC_ADR_B1	
	FWC_ADR_B0	
Write data	FWC_WD0	
	FWC_WD1	
	FWC_WD2	
	…	
	FWC_WDx	

UART			
Remote request		**GP30 Acknowledge**	
Command	RC_FWC_WR		
Address	FWC_ADR_B0		
	FWC_ADR_B1		
Length	FWC_BL		
Write data	FWC_WD0		
	FWC_WD1		
	FWC_WD2		
	…		
	FWC_WDx		
CRC	CRC_B0		
	CRC_B1		
		Command	RC_FWC_WR
		CRC	CRC_B0
			CRC_B1

5.4.6 Measurement Task Request

Remote Command	Code	SPI	UART	Description
RC_MT_REQ	0xDA	X	X	Measure Task Request

The Measure Task Request is followed by an extended command EC_MT_REQ which defines the requested measure task(s):

Extended Command	Description
EC_MT_REQ	Measure Task Request EC_MT_REQ [Bit 0]: V_{CC} Voltage Measurement EC_MT_REQ [Bit 1]: *not used* EC_MT_REQ [Bit 2]: Time Of Flight Measurement EC_MT_REQ [Bit 3]: Amplitude Measurement EC_MT_REQ [Bit 4]: Amplitude Measurement Calibration EC_MT_REQ [Bit 5]: Temperature Measurement EC_MT_REQ [Bit 6]: High Speed Clock Calibration EC_MT_REQ [Bit 7]: Zero Cross Calibration

SPI		
Remote request		**Answer**
Command	RC_MT_REQ	
Extended	EC_MT_REQ	

UART			
Remote request		**GP30 Acknowledge**	
Command	RC_MT_REQ		
Extended	EC_MT_REQ		
CRC	CRC_B0		
	CRC_B1		
		Command	RC_xxx
		CRC	CRC_B0
			CRC_B1

5.4.7 System Commands

Remote Command	Code	SPI	UART	Description
RC_BM_RLS	0x87	X	X	Bus Master Release
RC_BM_REQ	0x88	X	X	Bus Master Request
RC_MCT_OFF	0x8A	X	X	Measure Cycle Timer Off
RC_MCT_ON	0x8B	X	X	Measure Cycle Timer On
RC_GPR_REQ	0x8C	X	X	General Purpose Request
RC_IF_CLR	0x8D	X	X	Interrupt Flags Clear
RC_COM_REQ	0x8E	X	X	Communication Request
RC_FW_CHKSUM	0xB8	X	X	Builds checksum of all FW memories

SPI		
Remote request		**Answer**
Command	RC_xxx	

UART			
Remote request		**GP30 Acknowledge**	
Command	RC_xxx		
CRC	CRC_B0		
	CRC_B1		
		Command	RC_xxx
		CRC	CRC_B0
			CRC_B1

5.4.8 Baud Rate Change

Remote Command	Code	SPI	UART	Description
RC_BRC_LOW	0xA0		X	Change to Low Baud Rate
RC_BRC_H00	0xA4		X	Change to High Baud Rate 0
RC_BRC_H01	0xA5		X	Change to High Baud Rate 1
RC_BRC_H10	0xA6		X	Change to High Baud Rate 2
RC_BRC_H11	0xA7		X	Change to High Baud Rate 3

UART			
Remote request		**GP30 Acknowledge**	
Command	RC_xxx		
CRC	CRC_B0		
	CRC_B1		
		Command	RC_xxx
		CRC	CRC_B0
			CRC_B1

5.4.9 UART Messages

Message	Code	SPI	UART	Description
MC_MSQ_IRQ	0xA8		X	Message Interrupt Request
MC_MSG_DATA	0xAA		X	Message Data
MC_COM_ERR	0xAB		X	Communication Error

Message Interrupt Request

GP30 Message	
Message code	MC_MSG_IRQ
CRC	CRC_B0
	CRC_B1

Communication Error

GP30 Message	
Message code	MC_COM_ERR
Payload	EM_COM_ERR
CRC	CRC_B0
	CRC_B1

Message Data

GP30 Message	
Message code	MC_MSG_DATA
Payload	MD_LEN
	MD0_B0
	MD0_B1
	MD0_B2
	MD0_B3
	MD1_B0
	…
	MDx_B3
CRC	CRC_B0
	CRC_B1

Communication Error EM_COM_ERR:

EM_COM_ERR [Bit 0] = Collision

EM_COM_ERR [Bit 1] = Unknown command

EM_COM_ERR [Bit 2] = CRC error

EM_COM_ERR [Bit 3] = Inter-byte gap too long

EM_COM_ERR [Bit 4] = Start / stop bit not detected

6 General Purpose IO Unit

The General Purpose IO Unit supports up to 7 GPIOs which can be used for different internal signals and/or interfaces. Dependent on package size and remote interface, following GPIOs are available (signed by X):

GPIO*x*	**32pin / SPI**	**32pin / UART**	**40pin / SPI**	**40pin / UART**
GPIO0	X	X	X	X
GPIO1	X	X	X	X
GPIO2		X		X
GPIO3		X		X
GPIO4			X	X
GPIO5			X	X
GPIO6			X	X

Following GPIO assignments are possible if pins are available (as defined above):

Pin	**E2P_MODE**	**00**				
	GPx_DIR	**01/10/11**	**00 (OUT)**			
	GPx_SEL	**-**	**00**	**01**	**10**	**11**
GPIO0		GPI[0]	GPO[0]	PI_PULSE	LS_CLK	US_FIRE
GPIO1		GPI[1]	GPO[1]	PI_DIR	ERROR_N	US_DIR
GPIO2		GPI[2]	GPO[2]	PI_PULSE	TSQ_BSY	LS_CLK
GPIO3		GPI[3]	GPO[3]	PI_DIR	TSQ_BSY	ERROR_N
GPIO4		GPI[4]	GPO[4]	US_IFC_EN	TSQ_BSY	US_FIRE_BUSY
GPIO5		GPI[5]	GPO[5]	PI_PULSE	LS_CLK	US_IFC_EN
GPIO6		GPI[6]	GPO[6]	PI_DIR	ERROR_N	US_RCV_EN

The assignment of the GPIOs has to be configured by

- **GP*x*_DIR** & **GP*x*_SEL** (x = 0..6) in **CR_GP_CTRL**
- **E2P_MODE** in **CR_PI_E2P**

Registered general purpose signals:

- GPI[6:0]: General Purpose Inputs readable via **SRR_GPI**
- GPO[6:0]: General Purpose Outputs writable via **SHR_GPO**

Pulse interface signals (for more details, see section below):

- PI_PULSE: Pulse Interface Out (for more details, see section below)
- PI_DIR: Pulse Interface Direction (for more details, see section below)

Ultrasonic measurement signals, suitable for extended circuits outside GP30, e.g. gas meter applications:

- US_IFC_EN: Signalizes time when ultrasonic interface is enabled
- US_DIR: Direction of ultrasonic measurement (up / down)
- US_FIRE_BUSY: Signalizes time while fire burst is sent
- US_FIRE: Ultrasonic fire burst
- US_RCV_EN: Signalizes time while detection of receive burst is enabled

Other signals:

- LS_CLK: Low speed clock of GP30 (32,768 kHz)
- TSQ_BUSY: Signalizes time while task sequencer & GP30 is busy
- ERROR_N: Signalizes error state (low active)

6.1 Pulse Interface

The pulse interface for flow indication is a separate, independent unit integrated in the GPIO unit. It is designed to provide pulse signals that signal flow volume, fully compatible to typical pulse interfaces of mechanical flow meters. It is thus possible to design an ultrasonic flow meter subsystem using TDC-GP30, which can be used as one-to-one replacement for mechanical flow meters.

The pulse interface generates pulses, where each pulse corresponds to a configurable flow volume (pulse valence, for example one pulse per 100 ml). The parameters of the pulse interface are configured as described below, in register **CR_PI_E2P**. The interface then operates at its configured update rate, independent of measurement interface and CPU, by generating pulses according to the actual flow volume. The flow volume must be signaled and updated, typically by a firmware running on the CPU, by updating the register **SHR_PI_NPULSE** or, more simple, by using the ROM routine **ROM_PI_UPD**. The ROM routine calculates the necessary input variables for the pulse interface from a given flow volume. For more details please refer to DB_GP30Y_Vol2 and DB_GP30Y_Vol3.

It is of course also possible to configure and update the pulse interface via remote interface by an external µController.

The following figure gives on overview of the relevant units and variables.

Figure 6-1 Relevant function blocks and variables in pulse interface

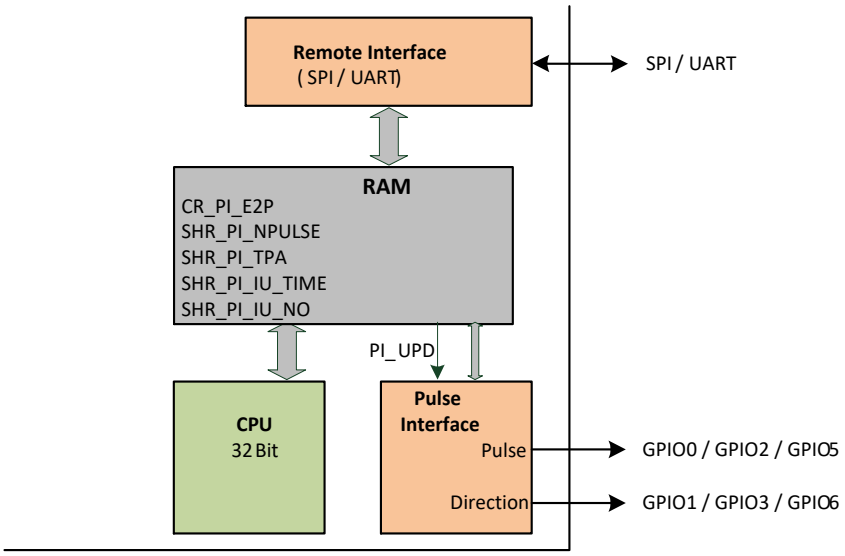

6.1.1 Configuration of the pulse output

The pulse interface outputs can be provided via GPIO0/GPIO1 (optionally via GPIO2/GPIO3 or GPIO5/GPIO6) see section 7.3.3 (register **CR_GP_CRTL**)

Basic configuration of the pulse interface is done in register **CR_PI_E2P**, see section 7.3.2. The most important configuration variables have the following meaning:

PI_OUT_MODE: Selects the two possible output formats.

PI_OUT_MODE=0

GPIO0 = Pulse output, provides the pulses, indicating flow

GPIO1 = Direction output, provides the direction of the measured flow rate, indicating positive/negative flow

Figure 6-2

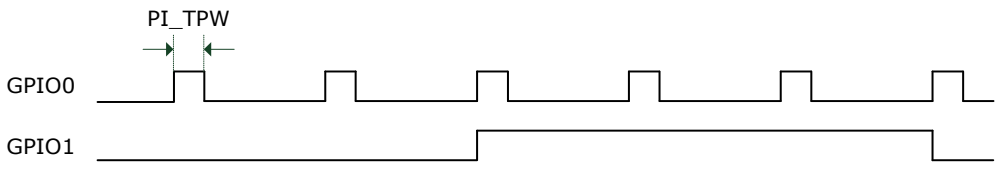

PI_OUT_MODE=1

GPIO0 = Pulse output, positive direction, issued for flow direction forward

GPIO1 = Pulse output, negative direction, issued for flow direction reverse

Figure 6-3

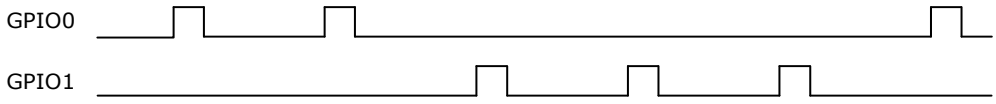

PI_TPW: Pulse width in multiples of 976.5625 µs (= period of 1024 Hz generated by 32.768 kHz clock), configurable from 1 to 255 (976.5625 µs to 249 ms).

PI_OUT_MODE and **PI_TPW** are initial parameters, which are typically configured once.

The general FW library of GP30 provide subroutines for pulse interface initialization dependent on following application parameter:

- TOF measure cycle time
- Pulse valence (ratio pulses/liter)
- Maximum flow

For more details please refer to DB_GP30Y_Vol2 and DB_GP30Y_Vol3.

6.2 EEPROM Interface

The EEPROM interface for an external memory extension (e.g. for backup purpose) is a separate, independent unit, integrated in the GPIO unit, which can be controlled by firmware of the integrated CPU.

The EEPROM interface is a master interface suited for a single two-wire connection to an I2C compatible EEPROM in fast mode (400 k). It does not support I2C spike suppression or output slope control.

E2P_SCL: Serial clock line

E2P_SDA: Serial data line (bidirectional)

The assignment of E2P signal lines to GPIOs can be configured by **E2P_MODE** in **CR_PI_E2P** as follows:

<table>
<tr><th>E2P_MODE</th><th>00</th><th>01</th><th>10</th><th>11</th></tr>
<tr><td>GPIO0</td><td rowspan="7">*)</td><td>E2P_SCL</td><td>*)</td><td>*)</td></tr>
<tr><td>GPIO1</td><td>E2P_SDA</td><td>*)</td><td>*)</td></tr>
<tr><td>GPIO2</td><td>*)</td><td>E2P_SCL</td><td>*)</td></tr>
<tr><td>GPIO3</td><td>*)</td><td>E2P_SDA</td><td>*)</td></tr>
<tr><td>GPIO4</td><td colspan="3">*)</td></tr>
<tr><td>GPIO5</td><td>*)</td><td>*)</td><td>E2P_SCL</td></tr>
<tr><td>GPIO6</td><td>*)</td><td>*)</td><td>E2P_SDA</td></tr>
</table>

*) as configured by **GP*x*_DIR** & **GP*x*_SEL** (table at beginning of this chapter)

A 7-bit slave address of external EEPROM can be configured by **E2P_ADR** in **CR_PI_E2P**. With **E2P_PU_EN** in **CR_PI_E2P,** internal pullup resistors can connected to both EEPROM signal lines.

The general FW library of GP30 provide subroutines for EEPROM communication. For more details, please refer to DB_GP30Y_Firmware.

7 Memory Organization & CPU

TDC-GP30 is a system-on-chip approach designed to perform all measurement and calculation tasks in one chip. This kind of operation as a complete measurement system is called flow meter mode (see also section 3.1.1). Operation in flow meter mode requires usage of the internal 32-bit CPU and an appropriate firmware. Details on this are given in DB_GP30Y_Vol2 and DB_GP30Y_Firmware. In the following, the main focus is on description of memory organization, including register addresses and functions. The knowledge of the various memory and register structures is important for operation in flow meter mode, but of course equally important for operation in time conversion mode. In time conversion mode, the GP30 does no further result evaluation and acts mainly as time-of-flight measurement system. This operation mode is comparable to the well-known acam chips GP21 and GP22.

The following diagram shows the memory organization and how the frontend, the CPU and the remote interface interact.

Figure 7-1 Memory organization

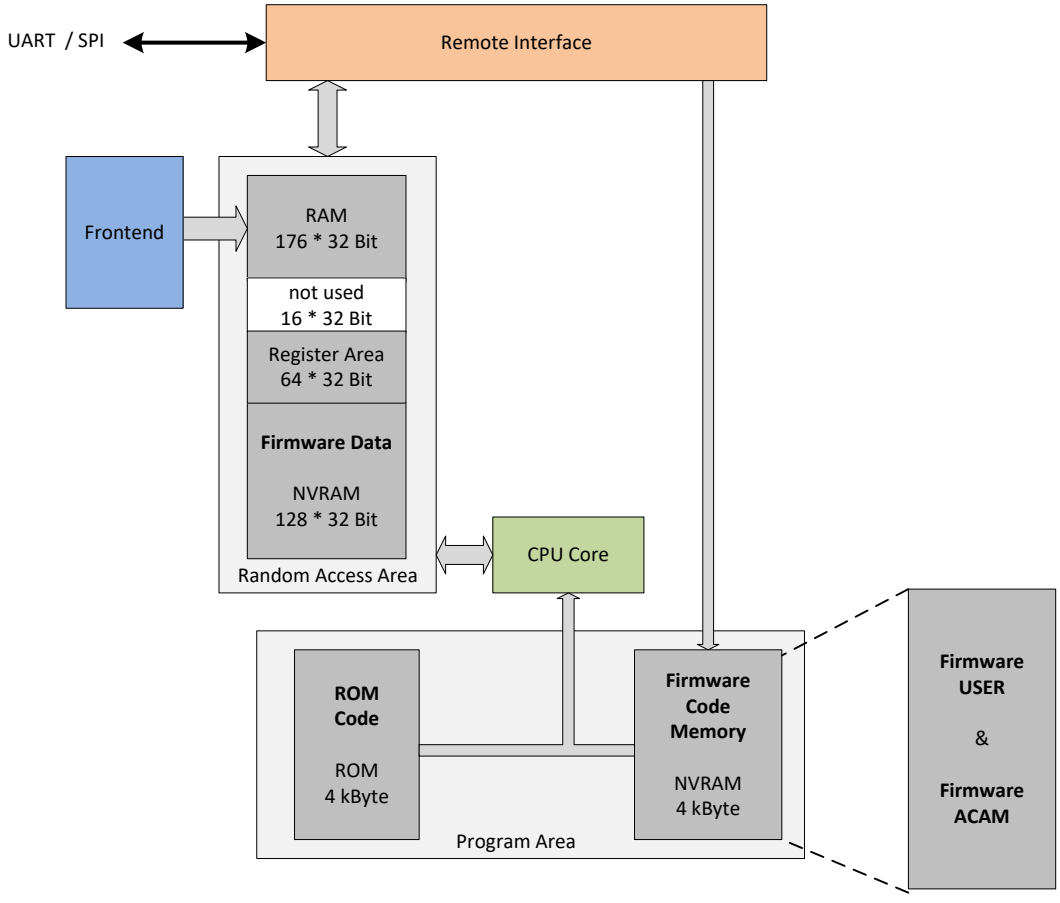

In time conversion mode, the chip is configured by writing to the register area in the RAM via the remote interface. After completion of a measurement, the frontend writes the various results for time-

of-flight, temperature, amplitude, pulse width and voltage into the front end data buffer (FDB, see section 7.2.1) in the RAM. From there the user can read the raw data via the remote interface.

Figure 7-2 Time Conversion Mode

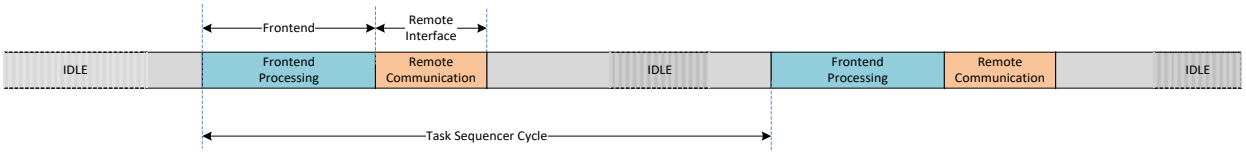

In the case of flow meter mode, the frontend processing would be followed by a post processing in CPU. Controlled by post processing a subsequent remote communication could be initiated, if desired.

Figure 7-3 Flow Meter Mode

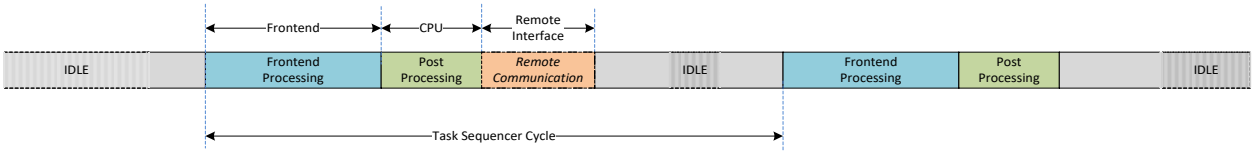

Any programmable firmware has to be stored in the firmware code memory, a non-volatile 4kByte NVRAM block. Additionally, many functions are already implemented as ROM routines in the ROM code memory block. The CPU uses the 176 * 32 bit RAM to read measurement results, to do its calculations and to write the final results. Configuration and calibration data is stored in the 128 * 32 bit firmware data memory. RAM and firmware data, as well as configuration and other system registers are all located in the random access address area (RAA). ROM and firmware code memory share a different address bus system and are not readable from outside the chip.

The firmware code memory and the firmware data memory are zero static power NVRAMs. Since they don't draw current when not in use, they are not switched down and remain permanently usable. However, the address and data bus of the RAA can only be allocated to one system at a time, so outside access to RAA memory cells is usually not possible when the frontend or the CPU operate on it.

7.1 Program Area

Program area consists of two memory parts: A 4-kbyte NVRAM for re-programmable program code, and a 4-kbyte ROM with read-only program code.

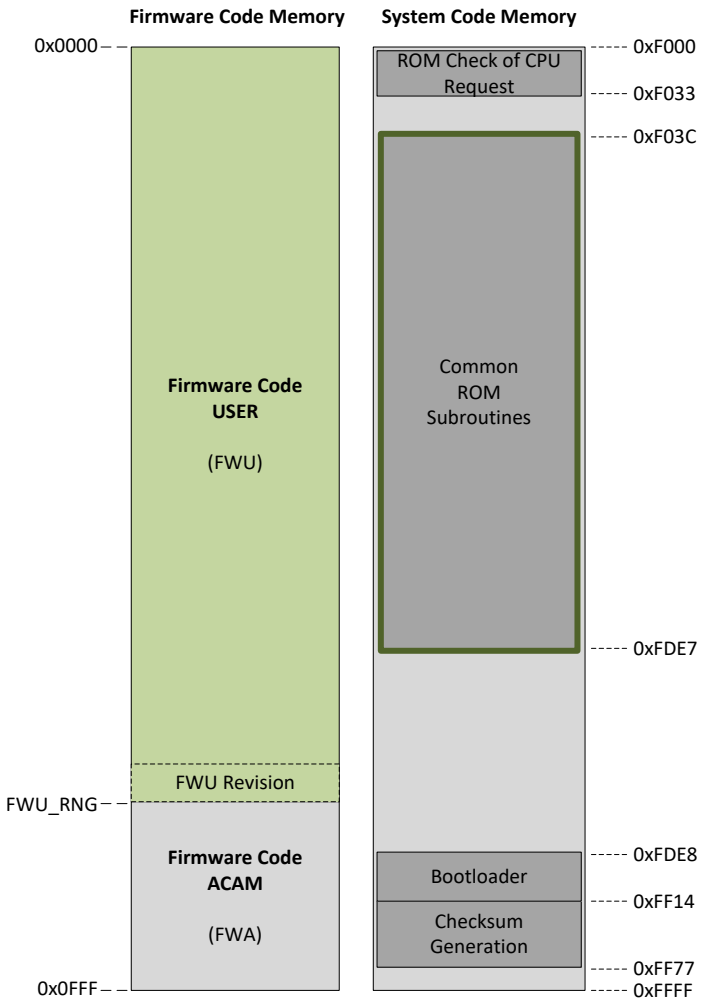

The firmware code in re-programmable NVRAM memory consists of:

- A USER part which can be programmed by customer (green colored)
- An acam part, pre-programmed by acam including general subroutines addressable by customer.

The available size of USER Firmware (FWU) is defined in register **SRR_FWU_RNG** which can be read by customer. The USER firmware has also a 4-byte reserved area at the end of the code memory, which can be used to implement a revision number. The revision can be read via register **SRR_FWU_REV**. Additionally the revision of ACAM firmware can be read via **SRR_FWA_REV**. Note that these two registers get updated by the bootloader and may contain invalid data before the bootloader had been operated.

The firmware code in read-only ROM memory includes system subroutines (bootloader, checksum generation) and general subroutines which are also addressable by customer. It also handles initial

check of CPU requests set in **SHR_CPU_REQ** register. For more details on FW program development, please refer to DB_GP30Y_Firmware.

7.2 Random Access Area (RAA)

The random access area can be separated into 3 sections:

- Random access memory (RAM) storing volatile firmware data and including frontend data buffer
- Register area
- Non-volatile RAM (NVRAM) storing non-volatile firmware data

The RAA has the following structure:

IP	Address	DWORD	Section	Description		RI*
RAM 176*32	0x000–0x07F	128	FWV	Firmware variables		RW
	0x080–0x087	8	FDB	Frontend Data Buffer		RW
	0x088–0x09B	20	FDB / (FWV)	Frontend Data Buffer / Firmware variables		RW
	0x09C–0x09F	4	FWV	Firmware variables		RW
	0x0A0–0x0AF	16	FWV or (TEMP)	Firmware variables or Temporary variables		RW
	0x0B0–0x0BF	16	NU	not used		-
Direct Mapped Register	0x0C0–0x0CF	16	CR	Configuration Registers		RW
	0x0D0–0x0DF	16	SHR	System Handling Registers		RW
	0x0E0–0x0EF	16	SRR	Status & Result Registers		RO
	0x0F0–0x0F7	8	NU	not used		-
	0x0F8–0x0FB	4	DR	Debug Registers		RO
	0x0FC–0x0FF	4	NU	Not used		-
NVRAM 128*32	0x100–0x11F	32	FWD1	Firmware data		RW
	0x120–0x16B	76	FWD2	Firmware data		RW
	0x16C–0x17A	15		CD	Configuration Data	RW
	0x17B	1		BLD_RLS	Bootloader Release	RW
	0x17C	1		FWD1 Checksum		RW
	0x17D	1		FWD2 Checksum		RW
	0x17E	1		FWU Checksum		RW
	0x17F	1	FW_CS	FWA Checksum		RW
	0x180–0x1FF	128	NU	Not used		-

*Access through the Remote Interface (RI) may be read/write (RW) or read only (RO)

A detailed CPU and NVRAM memory description is given in DB_GP30Y_Vol2.

The configuration data is described in section 7.3, the system handling registers in section 7.4.

Firmware variables may be any intermediate or final results as well as custom control variables of the firmware, and firmware data typically contains any configuration and calibration data. For details, please refer to DB_GP30Y_Firmware.

7.2.1 Frontend data buffer (FDB)

The front end data buffer is used by the time-of-flight measurement and the temperature measurement alternately. For explanations on the data format, see sections 3.2.3 and 3.3.1. Depending on which measurement has been executed recently, and depending on configuration, the RAM of the FDB can have the following content:

Time-of-flight measurement:

Table 7-1 RAM addresses TOF data

RAA Address	Name	Description
0x080	***FDB_US_TOF_SUM_OF_ALL_U***	Ultrasonic TOF Sum of All Value Up
0x081	***FDB_US_PW_U***	Ultrasonic Pulse Width Ratio Up
0x082	***FDB_US_AM_U***	Ultrasonic Amplitude Value Up
0x083	***FDB_US_AMC_VH***	Ultrasonic Amplitude Calibrate Value High
0x084	***FDB_US_TOF_SUM_OF_ALL_D***	Ultrasonic TOF Sum of All Value Down
0x085	***FDB_US_PW_D***	Ultrasonic Pulse Width Ratio Down
0x086	***FDB_US_AM_D***	Ultrasonic Amplitude Value Down
0x087	***FDB_US_AMC_VL***	Ultrasonic Amplitude Calibrate Value Low
0x088	***FDB_US_TOF_0_U***	Ultrasonic TOF Up Value 0
0x089	***FDB_US_TOF_1_U***	Ultrasonic TOF Up Value 1
0x08A	***FDB_US_TOF_2_U***	Ultrasonic TOF Up Value 2
0x08B	***FDB_US_TOF_3_U***	Ultrasonic TOF Up Value 3
0x08C	***FDB_US_TOF_4_U***	Ultrasonic TOF Up Value 4
0x08D	***FDB_US_TOF_5_U***	Ultrasonic TOF Up Value 5
0x08E	***FDB_US_TOF_6_U***	Ultrasonic TOF Up Value 6
0x08F	***FDB_US_TOF_7_U***	Ultrasonic TOF Up Value 7
0x090	***FDB_US_TOF_0_D***	Ultrasonic TOF Down Value 0
0x091	***FDB_US_TOF_1_D***	Ultrasonic TOF Down Value 1
0x092	***FDB_US_TOF_2_D***	Ultrasonic TOF Down Value 2
0x093	***FDB_US_TOF_3_D***	Ultrasonic TOF Down Value 3
0x094	***FDB_US_TOF_4_D***	Ultrasonic TOF Down Value 4

0x095	***FDB_US_TOF_5_D***	Ultrasonic TOF Down Value 5
0x096	***FDB_US_TOF_6_D***	Ultrasonic TOF Down Value 6
0x097	***FDB_US_TOF_7_D***	Ultrasonic TOF Down Value 7

Temperature measurement:

Table 7-2 RAM address temperature measurement data

RAA Address	Name	Description
0x080	***FDB_TM_PP_M1***	Schmitt trigger delay Compensation Value
0x081	***FDB_TM_PTR_RAB_M1***	PT Ref: Impedance Value
0x082	***FDB_TM_PTC_CAB_M1***	PT Cold: Impedance Value
0x083	***FDB_TM_PTH_HAB_M1***	PT Hot: Impedance Value
0x084	***FDB_TM_PTR_RA_M1***	PT Ref: 1st Rds(on) correction Value
0x085	***FDB_TM_PP_M2***	Schmitt trigger delay Compensation Value
0x086	***FDB_TM_PTR_RAB_M2***	PT Ref: Impedance Value
0x087	***FDB_TM_PTC_CAB_M2***	PT Cold: Impedance Value
0x088	***FDB_TM_PTH_HAB_M2***	PT Hot: Impedance Value
0x089	***FDB_TM_PTR_RA_M2***	PT Ref: 1st Rds(on) correction Value
0x08A	***FDB_TM_PTR_4W_RB_M1***	PT Ref: 2nd Rds(on) correction Value
0x08B	***FDB_TM_PTC_4W_CA_M1***	PT Cold: 1st Rds(on) correction Value
0x08C	***FDB_TM_PTC_4W_CB_M1***	PT Cold: 2nd Rds(on) correction Value
0x08D	***FDB_TM_PTC_4W_AC_M1***	PT Cold: 3rd Rds(on) correction Value
0x08E	***FDB_TM_PTC_4W_BC_M1***	PT Cold: 4th Rds(on) correction Value
0x08F	***FDB_TM_PTH_4W_HA_M1***	PT Hot: 1st Rds(on) correction Value
0x090	***FDB_TM_PTH_4W_HB_M1***	PT Hot: 2nd Rds(on) correction Value
0x091	***FDB_TM_PTH_4W_AH_M1***	PT Hot: 3rd Rds(on) correction Value
0x092	***FDB_TM_PTH_4W_BH_M1***	PT Hot: 4th Rds(on) correction Value
0x093	***FDB_TM_PTR_4W_RB_M2***	PT Ref: 2nd Rds(on) correction Value
0x094	***FDB_TM_PTC_4W_CA_M2***	PT Cold: 1st Rds(on) correction Value
0x095	***FDB_TM_PTC_4W_CB_M2***	PT Cold: 2nd Rds(on) correction Value
0x096	***FDB_TM_PTC_4W_AC_M2***	PT Cold: 3rd Rds(on) correction Value
0x097	***FDB_TM_PTC_4W_BC_M2***	PT Cold: 4th Rds(on) correction Value
0x098	***FDB_TM_PTH_4W_HA_M2***	PT Hot: 1st Rds(on) correction Value
0x099	***FDB_TM_PTH_4W_HB_M2***	PT Hot: 2nd Rds(on) correction Value
0x09A	***FDB_TM_PTH_4W_AH_M2***	PT Hot: 3rd Rds(on) correction Value
0x09B	***FDB_TM_PTH_4W_BH_M2***	PT Hot: 4th Rds(on) correction Value

The values at the shaded addresses (0x08A – 0x09B) are only posted if **TM_WIRE_MODE** is set to 4-wire in **CR_TM.**

7.2.2 Configuration Registers

The TDC-GP30 has 15 configuration registers of up to 32 bit word length. Configuration registers mainly contain fixed parameters which define the operation of all units of the GP30. They can be automatically updated by the bootloader from firmware data. For details see section 7.3.

Address	Register	Description
0x0C0	**CR_WD_DIS**	Watchdog Disable
0x0C1	**CR_PI_E2C**	Pulse Interface
0x0C2	**CR_GP_CTRL**	General Purpose Control
0x0C3	**CR_UART**	UART Interface
0x0C4	**CR_IEH**	Interrupt & Error Handling
0x0C5	**CR_CPM**	Clock & Power Management
0x0C6	**CR_MRG_TS**	Measure Rate Generator & Task Sequencer
0x0C7	**CR_TM**	Temperature Measurement
0x0C8	**CR_USM_PRC**	USM: Processing
0x0C9	**CR_USM_FRC**	USM: Fire & Receive Control
0x0CA	**CR_USM_TOF**	USM: Time of Flight
0x0CB	**CR_USM_AM**	USM: Amplitude Measurement
0x0CC	**CR_TRIM1**	Trim Parameter
0x0CD	**CR_TRIM2**	Trim Parameter
0x0CE	**CR_TRIM3**	Trim Parameter
0x0CF	*not used*	*not used*

7.2.3 System Handling Registers (SHR)

The TDC-GP30 has 14 system handling registers of up to 32 bit word length. System handling registers also define the operation of the various units of GP30, like the configuration registers. Unlike the configuration registers, they contain data which is supposed to change during operation. These registers are not automatically updated. For details see section 7.4.

Address	Register	Description
0x0D0	**SHR_TOF_RATE**	Time-of-Flight rate
0x0D1	*not used*	*not used*
0x0D2	*not used*	*not used*
0x0D3	**SHR_GPO**	General Purpose Out
0x0D4	**SHR_PI_NPULSE**	Pulse Interface Number of Pulses
0x0D5	**SHR_PI_TPA**	Pulse Interface Time Pulse Distance
0x0D6	**SHR_PI_IU_TIME**	Pulse Interface Internal Update Time Distance
0x0D7	**SHR_PI_IU_NO**	Pulse Interface Number of internal Update
0x0D8	**SHR_TOF_START_HIT_DLY**	Start Hit Release Delay
0x0D9	**SHR_ZCD_LVL**	Zero cross detection, level
0x0DA	**SHR_ZCD_FHL_U**	Zero Cross DetectionFirst Hit Level Up
0x0DB	**SHR_ZCD_FHL_D**	Zero Cross DetectionFirst Hit Level Down
0x0DC	**SHR_CPU_REQ**	CPU Requests
0x0DD	**SHR_EXC**	Executables
0x0DE	**SHR_RC**	Remote Control
0x0DF	**SHR_FW_TRANS_EN**	Firmware Transaction Enable

7.2.4 Status & Result Registers

The TDC-GP30 has 16 status & result registers of up to 32 bit word length. The status & result registers contain information generated by the chip hardware, e.g. status information like error flags or timing information, or measurement values from various hard-coded calibrations. They can't be directly written. For details see section 7.5.

Address	Register	Description
0x0E0	**SRR_IRQ_FLAG**	Interrupt Flags
0x0E1	**SRR_ERR_FLAG**	Error Flags
0x0E2	**SRR_FEP_STF**	Frontend Processing Status Flags
0x0E3	**SRR_GPI**	General Purpose In
0x0E4	**SRR_HCC_VAL**	High-Speed Clock Calibration Value
0x0E5	**SRR_VCC_VAL**	Measurement Value for V_{CC} Voltage
0x0E6	**SRR_TSV_HOUR**	Time Stamp Value: Hours
0x0E7	**SRR_TSV_MIN_SEC**	Time Stamp Value: Minutes & Seconds
0x0E8	**SRR_TOF_CT**	Time Of Flight Cycle Time
0x0E9	**SRR_TS_TIME**	Task Sequencer Time
0x0EA	**SRR_MSC_STF**	Miscellaneous Status Flags
0x0EB	**SRR_E2P_RD**	EEPROM Read Data
0x0EC	**SRR_FWU_RNG**	Range Firmware Code User
0x0ED	**SRR_FWU_REV**	Revision Firmware Code User
0x0EE	**SRR_FWA_REV**	Revision Firmware Code ACAM
0x0EF	**SRR_LSC_CV**	Low Speed Clock Value

7.2.5 Debug Registers

The four debug registers are for test purpose only. In debug mode (not available yet), they will contain internal CPU variables.

Address	Register	Description
0x0F8	**DR_ALU_X**	ALU Register X
0x0F9	**DR_ALU_Y**	ALU Register Y
0x0FA	**DR_ALU_Z**	ALU Register Z
0x0FB	**DR_CPU_A**	ALU Flags & Program Counter

7.3 Configuration Registers

7.3.1 CR_WD_DIS (Watchdog Disable) 0x0C0

Bit	Description	Format	Reset
31:0	**WD_DIS:** Watchdog Disable Code to disable Watchdog: 0x48DB_A399, Write only register. Status of watchdog can be checked in WD_DIS in register SRR_MSC_STF	BIT32	0xAF0 A7435

7.3.2 CR_PI_E2P (Pulse & EEPROM Interface) 0x0C1

Bit	Description	Format	Reset
31:22	*Not used*		
21	**E2P_PU_EN:** EEPROM Interface Pull-up Enable	BIT	B0
20:14	**E2P_ADR:** EEPROM Interface Slave Address	BIT7	0
13:12	**E2P_MODE:** EEPROM Interface Mode 00: EEPROM interface disabled 01: EEPROM interface enabled on GPIO 0/1 10: EEPROM interface enabled on GPIO 2/3 (only if UART remote interface) 11: EEPROM interface enabled on GPIO 5/6	BIT2	b00
11	*not used*		
10	**PI_UPD_MODE** 0: Automatic Update disabled, only by PI_UPD in SHR_EXC 1: Automatic Update wit next TOF Trigger	BIT2	b00
9	**PI_OUT_MODE** 0: Output of pulses on 1 line with additional direction signal 1: Output of pulses on different lines for each direction	BIT	b0
8	**PI_EN**, Pulse Interface Enable, if operating in flow meter mode 0: Pulse Interface disabled 1: Pulse Interface enabled	BIT	b0
7:0	**PI_TPW**: Pulse Interface, Pulse Width = PI_TPW * 976.5625 µs (LP_MODE = 1), = PI_TPW * 1 ms (LP_MODE = 0)	UINT [7:0]	1

7.3.3 CR_GP_CTRL (General Purpose Control) 0x0C2

Bit	Description	Format	Reset
31:30	**SCK_RXD_CFG:** Configuration of SCK (SPI) or RXD (UART) Port 00: Input High Z 01: Input Pull Up 10: Input Pull Down 11: Input High Z	BIT2	b01
29:28	*not used*		
27:26	**GP6_SEL**: Output Select of General Purpose Port 6 00: General Purpose Out[6] 01: Pulse Interface -> Direction 10: Error Flag (low active) 11: Ultrasonic Receive Busy	BIT2	b00
25:24	**GP6_DIR:** Direction of General Purpose Port 6 *see definition for GP0_DIR*	BIT2	b01
23:22	**GP5_SEL**: Output Select of General Purpose Port 5 00: General Purpose Out[5] 01: Pulse Interface -> Pulse 10: Low Speed Clock 11: Ultrasonic Measurement Busy	BIT2	b00
21:20	**GP5_DIR:** Direction of General Purpose Port 5 *see definition for GP0_DIR*	BIT2	b01
19:18	**GP4_SEL**: Output Select of General Purpose Port 4 00: General Purpose Out[4] 01: Ultrasonic Measurement Busy 10: GP30 Busy 11: Ultrasonic Fire Busy	BIT2	b00
17:16	**GP4_DIR:** Direction of General Purpose Port 4 *see definition for GP0_DIR*	BIT2	b01
15:14	**GP3_SEL**: Output Select of General Purpose Port 3 00: General Purpose Out[3] 01: Pulse Interface -> Direction 10: GP30 Busy 11: Error Flag (low active)	BIT2	b00
13:12	**GP3_DIR:** Direction of General Purpose Port 3, if remote interface is operating in UART mode. When operating in SPI mode this port is used for MOSI 00: Output (UART:GP3) / Input High Z (SPI: MOSI) 01: Input Pull Up 10: Input Pull Down 11: Input High Z	BIT2	b01
11:10	**GP2_SEL**: Output Select of General Purpose Port 2 00: General Purpose Out[2] 01: Pulse Interface -> Pulse 10: GP30 Busy 11: Low Speed Clock	BIT2	b00

Bit	Description	Format	Reset
9:8	**GP2_DIR:** Direction of General Purpose Port 2, if remote interface is operating in UART mode. When operating in SPI mode this port is used for SSN 00: Output (UART: GP2) / Input High Z (SPI: SSN) 01: Input Pull Up 10: Input Pull Down 11: Input High Z	BIT2	b01
7:6	**GP1_SEL**: Output Select of General Purpose Port 1 00: General Purpose Out[1] 01: Pulse Interface -> Direction 10: Error Flag (low active) 11: Ultrasonic Direction	BIT2	b00
5:4	**GP1_DIR:** Direction of General Purpose Port 1 *see definition for GP0_DIR*	BIT2	b01
3:2	**GP0_SEL**: Output Select of General Purpose Port 0 00: General Purpose Out[0] 01: Pulse Interface -> Pulse 10: Low Speed Clock 11: Ultrasonic Fire Burst	BIT2	b00
1:0	**GP0_DIR:** Direction of General Purpose Port 0 00: Output 01: Input Pull Up 10: Input Pull Down 11: Input High Z	BIT2	b01

7.3.4 CR_UART (UART Interface) 0x0C3

Bit	Description	Format	Reset
31:16	**UART_CRC_POLY**: CRC Polynom **Register CR_UART[Bit 16] has to be set 1, mandatory**	UINT [15:0]	h1021
15	**UART_CRC_ORDER** 0: UART CRC in unreversed order 1: UART CRC in reversed order	BIT	b0
14	**UART_CRC_INIT_VAL** 0: UART CRC Initial Value = 0x0000 1: UART CRC Initial Value = 0x1111	BIT	b1
13	**UART_CRC_MODE**, if operating in flow meter mode 0: UART CRC with default settings 1: UART CRC with configured settings For initial communication or operating in time conversion mode UART_CRC_MODE in SHR_RC has to be used.	BIT	b1
12	**UART_WUP_EN** 0: Wake Up Command disabled 1: Wake Up Command enabled	BIT	b0

Bit	Description	Format	Reset
11:10	**UART_HBR:** UART High Baud Rate If any High Baud Mode enabled: 00: 19200 Baud 01: 38400 Baud 10: 57600 Baud 11: 115200 Baud	BIT2	b01
9	**UART_HB_MODE:** UART High Baud Mode 0: High Baud Rate only controlled by remote controller 1: High Baud Rate enabled for UART Data Message	BIT	b1
8	**UART_IRQ_CLR_MODE:** UART Interrupt Clear Mode 0: UART Remote Interrupt has to be cleared by remote controller 1: UART Remote Interrupt automatically cleared by GP30	BIT	b0
7:4	**UART_DATA_MSG_ADR** Start of address block of automatic data message (upper four bit of actual start address)	UINT [3:0]	0
3:0	**UART_DATA_MSG_LEN** 0: Automatic Data Message disabled 1-15: Length of automatic data message	UINT [3:0]	0

7.3.5 CR_IEH (Interrupt & Errorhandling) 0x0C4

Bit	Description	Format	Reset
31	**CPU_BLD_CS:** Checksum Execution after bootloader 0: Checksum execution after bootloader disabled 1: Checksum execution after bootloader enabled	BIT	b0
30:28	**CPU_GPT:** General Purpose Timer, triggers General Purpose Handling for CPU via Task Sequencer 000: 1h 001: 2h 010: 4h 011: 6h 100: 8h 101: 12h 110: 24h 111: 48h	BIT	0
27	**Has to be set 0**	BIT	b0
26	**CPU_REQ_EN_GPH:** CPU Request Enable, General Purpose Handling triggered by General Purpose Timer 0: disabled 1: enabled	BIT2	b00
25	*not used*	BIT	b0
24	**CPU_REQ_EN_PP:** CPU Request Enable, Post Processing If enabled, PP_EN in CR_MRG_TS has also be set.	BIT	b0
23	**IRQ_EN_ERR_FLAG:** Interrupt Request Enable, Error Flag	BIT	b1
22	**IRQ_EN_DBG_STEP_FNS:** Interrupt Request Enable, Debug Step Finished	BIT	b1
21	**IRQ_EN_FW:** Interrupt Request Enable, Firmware	BIT	b1

Bit	Description	Format	Reset
20	**IRQ_EN_FW_S:** Interrupt Request Enable , Firmware, synchronized with task sequencer	BIT	b1
19	**IRQ_EN_CHKSUM_FNS:** Interrupt Request Enable, Checksum generation finished	BIT	b1
18	**IRQ_EN_BLD_FNS:** Interrupt Request Enable, Bootload finished	BIT	b1
17	**IRQ_EN_TRANS_FNS:** Interrupt Request Enable, FW Transaction finished	BIT	b1
16	**IRQ_EN_TSQ_FNS:** Interrupt Request Enable, Task Sequencer finished	BIT	b1
15	**EF_EN_CS_FWA_ERR:** Error Flag Enable, FWA Checksum Error	BIT	b0
14	**EF_EN_CS_FWU_ERR:** Error Flag Enable, FWU Checksum Error	BIT	b0
13	**EF_EN_CS_FWD2_ERR:** Error Flag Enable, FWD2 Checksum Error	BIT	b0
12	**EF_EN_CS_FWD1_ERR:** Error Flag Enable, FWD1 Checksum Error	BIT	b0
11	*Not used*		
10	**EF_EN_E2P_ACK_ERR:** Error Flag Enable, EEPROM Acknowledge Error	BIT	b0
9	**EF_EN_TSQ_TMO:** Error Flag Enable, Task Sequencer Timeout	BIT	b0
8	**EF_EN_TM_SQC_TMO:** Error Flag Enable, Temperature Sequence Timeout	BIT	b0
7	**EF_EN_USM_SQC_TMO:** Error Flag Enable, Ultrasonic Sequence Timeout	BIT	b0
6	**EF_EN_LBD_ERR:** Error Flag Enable, Low Battery Detect Error	BIT	b0
5	**EF_EN_ZCC_ERR:** Error Flag Enable, Zero Cross Calibration Error	BIT	b0
4	**EF_EN_TM_SC:** Error Flag Enable, Temperature Measurement Short Circuit	BIT	b0
3	**EF_EN_TM_OC:** Error Flag Enable, Temperature Measurement Open Circuit	BIT	b0
2	**EF_EN_AM_TMO:** Error Flag Enable, Amplitude Measurement Timeout	BIT	b0
1	**EF_EN_TOF_TMO:** Error Flag Enable, TOF Timeout	BIT	b0
0	**EF_EN_TDC_TMO:** Error Flag Enable, TDC Timeout	BIT	b0

7.3.6 CR_CPM (Clock- & Power-Management) 0x0C5

Bit	Description	Format	Reset
31:24	*Not used*		
23	**BF_SEL:** Base Frequency Select 0: 50 Hz T(BF_SEL) = 20 ms 1: 60 Hz T(BF_SEL) = 16.66 ms	BIT	b0
22	**TSV_UPD_MODE**: Time stamp update mode 0: Timestamp updated by TSV_UPD in SHR_EXC 1: Timestamp automatically update with every second	BIT	b0
21:16	**LBD_TH:** Low battery detection threshold, can be used for V_{CC} measurement 1 LSB: 25 mV LBD_TH = 0: 2.13 V LBD_TH = 63: 3.70 V	UINT [5:0]	0

Bit	Description	Format	Reset
15:13	**VM_RATE:** V_{CC} Voltage measurement rate 000: V_{CC} Voltage measurement disabled 001: V_{CC} Voltage measurement every measure cycle trigger 010: V_{CC} Voltage measurement every 2. sequence cycle trigger 011: V_{CC} Voltage measurement every 5. sequence cycle trigger 100: V_{CC} Voltage measurement every 10. sequence cycle trigger 101: V_{CC} Voltage measurement every 20. sequence cycle trigger 110: V_{CC} Voltage measurement every 50. sequence cycle trigger 111: V_{CC} Voltage measurement every 100. sequence cycle trigger	BIT3	b000
12	**GPH_MODE:** General Purpose Handling Mode 0: General Purpose Handling invoked without High Speed Clock 1: General Purpose Handling invoked with High Speed Clock	BIT	b0
11:9	**HSC_RATE:** High-Speed Clock Calibration Rate 000: Clock Calibration disabled 001: Clock Calibration every measure cycle trigger 010: Clock Calibration every 2. measurement cycle trigger 011: Clock Calibration every 5. measurement cycle trigger 100: Clock Calibration every 10. measurement cycle trigger 101: Clock Calibration every 20. measurement cycle trigger 110: Clock Calibration every 50. measurement cycle trigger 111: Clock Calibration every 100. measurement cycle trigger	BIT3	b000
8	**HS_CLK_SEL:** High-Speed Clock Select, if operating in flow meter mode 0: if 4 MHz clock source is used 1: if 8 MHz clock source is used For initial communication or operating in time conversion mode HS_CLK_SEL in SHR_RC has to be used.	BIT	b1
7:5	**HBR_TO**: High-Speed Clock Timeout if High Baud rate enabled 000: 10 ms 001: 20 ms 010: 30 ms 011: 40 ms 100: 60 ms 101: 80 ms 110: 100 ms 111: 120 ms	BIT3	b001
4:2	**HS_CLK_ST**: High-Speed Clock Settling Time 000: On Request, Settling Time 74 µs 001: On Request, Settling Time 104 µs 010: On Request, Settling Time 135 µs 011: On Request, Settling Time 196 µs 100: On Request, Settling Time 257 µs 101: On Request, Settling Time 379 µs 110: On Request, Settling Time 502 µs 111: On Request, Settling Time ~5000 µs	BIT3	b110
1:0	**Has to be set 00**	BIT2	b00

7.3.7 CR_MRG_TS (Measure Rate Generator & Task Sequencer) 0x0C6

Bit	Description	Format	Reset
31:24	*Not used*		

Bit	Description	Format	Reset
23	**TS_START_MODE:** Task Sequencing Start Mode 0: Task Sequencing first starts when remote interface isn't busy 1: Task Sequencing starts independent of remote busy state	BIT	b0
22:20	**TS_CST:** Checksum Timer 000: Checksum timer disabled 001: 1h 010: 2h 011: 6h 100: 24h 101: 48h 110: 96h 111: 168h This function is not executed when TOF_RATE = 1 and TM_RATE = 1 is set at the same time.	BIT3	b000
19:17	**Has to be set 000**	BIT3	0
16	**BG_PLS_MODE**: Bandgap pulse mode 0: Bandgap in self-pulsed mode 1: Bandgap synchronized pulsed by Task sequencer	BIT	b1
15	**PP_MODE:** Post processing mode (only if post processing is enabled) 0: Post processing requested with every task sequencer trigger 1: Post processing only requested if a measurement task is requested	BIT	b0
14	**PP_EN:** Post processing enable, used by CPU, if operating in flow meter mode 0: Post processing disabled 1: Post processing enabled If enabled, CPU_REQ_EN_PP in CR_IEH has also be set.	BIT	b0
13	**TS_RESTART_EN:** Task Sequencer Restart Enable 0: No automatic restart of task sequencer if not in IDLE 1: Task Sequencer automatically restarts with next measure cycle trigger if not in IDLE	BIT	b1
12:0	**MR_CT:** Measure rate cycle time 0: Measure rate generator disabled 1 – 8191: Cycle time = MR_CT * 976.5625 µs (LP_MODE = 1), = MR_CT * 1 ms (LP_MODE = 0)	UINT [12:0]	0

7.3.8 CR_TM (Temperature Measurement) 0x0C7

Bit	Description	Format	Reset
31:24	*Not used*		
23	**TM_FAKE_NO**: Number of Fake measurements 0: 2 fake measurements 1: 8 fake measurements	BIT	b0
22	**TM_DCH_SEL**: TM Discharge Select 0: 512 µs 1: 1024 µs	BIT	b0

Bit	Description	Format	Reset
21:20	**TM_LD_DLY**: Temperature Measurement Load Delay 00: Recommended, no delay needed 01: 10: 11:	BIT2	b00
19:18	**TM_PORT_ORDER**: TM Measurement Port Order 00: Measurement always in default port order 01: Measurement always in reversed order 10: 1. measurement: default order / 2. measurement: reversed order 11: 1. measurement: reversed order / 2. measurement: default order	BIT2	b00
17	**TM_PORT_MODE**: Port Mode 0: Inactive ports pulled to GND while measurement 1: Inactive ports set to HighZ while measurement (only for extern measurement)	BIT	b0
16	**TM_PORT_NO**: Number of Ports 0: 1 ports, 1 external sensor 1: 2 ports, 2 external sensors (only for extern 2-wire measurement)	BIT	b0
15	**TM_WIRE_MODE**: Temperature Measurement Wire Mode 0: 2 Wire 1: 4 Wire (only for extern measurement)	BIT	b0
14:13	**TM_MODE**: Temperature Measurement Mode 00: Extern 01: Intern 1x: Toggling between Extern/Intern	BIT2	b00
12:10	**TM_PAUSE**: Pause time between 2 temperature measurements 000: no pause, only one measurement performed * 001: not allowed 010: Pause time = 0.25 * T(BF_SEL) ms 011: Pause time = 0.5 * T(BF_SEL) ms 100: Pause time = 1.0 * T(BF_SEL) ms 101: Pause time = 1.5 * T(BF_SEL) ms 110: Pause time = 2.0 * T(BF_SEL) ms 111: Pause time = 2.5 * T(BF_SEL) ms * In case no pause is selected it is recommended to disable the error flags EF_EN_TM_SQC_TMO	BIT3	b000
9:0	**TM_RATE:** Temperature Measurement Rate 0: Temperature Measurement disabled 1-1023: Rate of Temperature Measurement related to sequencer cycle trigger	UINT [9:0]	0

7.3.9 CR_USM_PRC (Ultrasonic Measurement Processing) 0x0C8

Bit	Description	Format	Reset
31:18	*Not used*		

Bit	Description	Format	Reset
17:16	**USM_TO:** Timeout 00: 128 µs 01: 256 µs 10: 1024 µs 11: 4096 µs	BIT2	b00
15:8	**USM_NOISE_MASK_WIN**: Defines the window as long any signal (e.g. noise) is masked on receive path. Starting time refers to rising edge of 1st fire pulse. End time defines switching point between firing and receiving state of transducer interface. Offset: -0.4 µs 1 LSB: 1 µs	UINT [7:0]	0
7:6	**Has to be set 00**	BIT2	b00
5:4	**USM_DIR_MODE:** Ultrasonic Measurement Direction Mode 00: Always starting firing via Fire Buffer Up 01: Always starting firing via Fire Buffer Down 1x: Toggling direction with every ultrasonic measurement	BIT2	b00
3	*Not used*		
2:0	**USM_PAUSE**: Pause time between 2 ultrasonic measurements 000: no pause, only 1 measurement performed * 001: not allowed 010: Pause time = 0.25 * T(BF_SEL) ms 011: Pause time = 0.5 * T(BF_SEL) ms 100: Pause time = 1.0 * T(BF_SEL) ms 101: Pause time = 1.5 * T(BF_SEL) ms 110: Pause time = 2.0 * T(BF_SEL) ms 111: Pause time = 2.5 * T(BF_SEL) ms * In case no pause is selected it is recommended to disable the error flags EF_EN_USM_SQC_TMO	BIT3	b000

7.3.10 CR_USM_FRC (Ultrasonic Measurement Fire & Receive Control) 0x0C9

Bit	Description	Format	Reset
31:27	*Not used*		
26	**TI_GM_MODE:** Gas Meter Mode 0: Gas Meter Mode disabled 1: Gas Meter Mode enabled	BIT	b1
25:21	**TI_PATH_EN:** Transducer Interface Path Enable, if Gas Meter Mode is enabled [4]: Enable analog switches in both US buffer [3]: Enable precharge transistors in both US buffer [2]: Enable pulldown transistors in both US buffer [1]: Enable receive path transistors as defined in TI_PATH_SEL [0]: Enable fire buffer as defined in TI_PATH_SEL	BIT5	b00000
20	**TI_ERA_EN:** External receive amplifier 0: External receive amplifier disabled 1: External receive amplifier enabled	BIT	b0

Bit	Description	Format	Reset
19:18	**TI_PATH_SEL:** Transducer interface path select 00: No fire buffer & no receive path selected 01: Fire buffer 1 (350Ω) & receive path 1 selected 10: Fire buffer 2 (550Ω) & receive path 2 selected 11: Both Fire Buffers (214Ω) & both Receive Paths selected	BIT2	b00
17:15	**ZCC_RATE:** Zero Cross Calibration Rate 000: Zero cross calibration via task sequencer disabled 001: Zero cross calibration every measure cycle trigger 010: Zero cross calibration every 2. measurement cycle trigger 011: Zero cross calibration every 5. measurement cycle trigger 100: Zero cross calibration every 10. measurement cycle trigger 101: Zero cross calibration every 20. measurement cycle trigger 110: Zero cross calibration every 50. measurement cycle trigger 111: Zero cross calibration every 100. measurement cycle trigger	BIT3	b000
14	**ZCD_FHL_POL:** First Hit Level polarity 0: Positive, first hit level above zero cross level 1: Negative, first hit level below zero cross level	BIT	0
13:7	**FPG_FP_NO:** Number of fire pulses	UINT [6:0]	0
6:0	**FPG_CLK_DIV**: Fire pulse generator clock divider (1 .. 127) Frequency = High Speed Clock divided by (FPG_CLK_DIV + 1) 0: divided by 2 1: divided by 2 2: divided by 3 …. 127: divided by 128	BIT7	0

7.3.11 CR_USM_TOF (Ultrasonic Measurement Time of Flight) 0x0CA

Bit	Description	Format	Reset
31:16	*Not used*		
15:14	**TOF_EDGE_MODE:** Time of Flight, Edge Mode 00: Time measurement on positive edge of TOF Hit 01: Time measurement on negative edge of TOF Hit 10: Edge for TOF hit toggling after every measurement cycle 11: Edge for TOF hit toggling after every 2. measurement cycle	BIT2	b00
13	**TOF_HITS_TO_FDB:** TOF Hits stored to frontend data buffer 0: Only TOF sum of all values is stored to Frontend Data Buffer 1: TOF sum of all values and the first 8 TOF values are stored to Frontend Data Buffer	BIT	0
12:8	**TOF_HIT_NO:** Number of TOF hits taken for TDC measurement 0: not allowed 1: 1 Hit 2: 2 Hits …. 31: 31 Hits	UINT [4:0]	0

Bit	Description	Format	Reset
7:6	**TOF_HIT_IGN:** Number of hits ignored between two TOF hits taken for TDC measurement 00: 0 Hits 01: 1 Hit 10: 2 Hits 11: 3 Hits	BIT2	b00
5:1	**TOF_START_HIT_NO:** Defines number of detected hits after first hit which is defined as the starting TOF hit for TDC measurement 0: 0 Hits not allowed because start hit cannot be first hit 1: 1 Hits not recommended due to instability after first hit 2: 2 Hits …. 31: 31 Hits	UINT [4:0]	0
0	**TOF_START_HIT_MODE:** Selects mode for TOF start hit 0: Start hit for TOF measurement defined by TOF_START_HIT_NO 1: Start hit for TOF measurement defined by TOF_START_HIT_DLY	BIT	0

7.3.12 CR_USM_AM (Ultrasonic Measurement Amplitude Measurement) 0x0CB

Bit	Description	Format	Reset
31:16	*Not used*		
15	**PWD_EN:** Enables pulse width detection 0: Pulse width detection disabled 1: Pulse width detection enabled	BIT	0
14:12	**AMC_RATE:** Amplitude measurement calibration rate 000: AM Calibration disabled 001: AM Calibration with every amplitude measurement 010: AM Calibration with every 2. amplitude measurement 011: AM Calibration with every 5. amplitude measurement 100: AM Calibration with every 10. amplitude measurement 101: AM Calibration with every 20. amplitude measurement 110: AM Calibration with every 50. amplitude measurement 111: AM Calibration with every 100. amplitude measurement	BIT3	b000
11:9	**Has to be set 111** Sets timeout for AM to 128µs	BIT3	0
8:4	**AM_PD_END:** Amplitude Measurement, Peak Detection End, defined by number of detected hits 0: *not allowed* 1: after 1. detected Hit 2: after 2. detected Hit …. 30: after 30. detected Hit 31: *not allowed* Recommended condition: AM_PD_END <= TOF_START_HIT_NO	UINT [4:0]	0
3	**Has to be set 0**	BIT	0

Bit	Description	Format	Reset
2:0	**AM_RATE:** Amplitude measurement Rate 000: Amplitude measure disabled 001: Amplitude measure every TOF trigger ..010: Amplitude measure every 2. TOF trigger 011: Amplitude measure every 5. TOF trigger 100: Amplitude measure every 10. TOF trigger 101: Amplitude measure every 20. TOF trigger 110: Amplitude measure every 50. TOF trigger ..111: Amplitude measure every 100. TOF trigger	BIT3	b000

7.3.13 CR_TRIM1 (Trim Parameter 1) 0x0CC

Bit	Description	Format	Reset
31:0	**Trim Parameter 1** Recommended Code: 0x**84A0C47C**	BIT32	h0000 _0000

7.3.14 CR_TRIM2 (Trim Parameters) 0x0CD

Bit	Description	Format	Reset
31:0	**Trim Parameter 2** Recommended Code: 0x**401700CF**	BIT32	h4037 _65C5

7.3.15 CR_TRIM3 (Trim Parameters) 0x0CE

Bit	Description	Format	Reset
31:0	**Trim Parameter 3** Recommended Code: 0x**00270808**	BIT32	h0000 _0818

7.4 System Handling Register

7.4.1 SHR_TOF_RATE (Time Of Flight Rate) 0x0D0

Bit	Description	Format	Reset
31:6	*Not used*		
5:0	**TOF_RATE:** TOF Rate 0: TOF Measurement disabled 1-63: Rate of TOF Measurement relative to measure rate cycle trigger	UINT [5:0]	1

7.4.2 SHR_GPO (General Purpose Out) 0x0D3

Bit	Description	Format	Reset
31:16	*Not used*		
15	**FWA_CSE:** FWA Checksum Error Typically set by Checksum Generation in ROM Code	BIT	0

Bit	Description	Format	Reset
14	**FWU_CSE:** FWU Checksum Error Typically set by Checksum Generation in ROM Code	BIT	0
13	**FWD2_CSE:** FWD2 Checksum Error Typically set by Checksum Generation in ROM Code	BIT	0
12	**FWD1_CSE:** FWD1 Checksum Error Typically set by Checksum Generation in ROM Code	BIT	0
11	**PI_DIR_FRC1:** Forces High on Pulse Direction (priority over PI_DIR_FRC0) Typically set by Firmware	BIT	0
10	**PI_DIR_FRC0:** Forces Low on Pulse Direction (unless PI_DIR_FRC1 is set) Typically set by Firmware	BIT	0
9	**PI_OUT_FRC1:** Forces High on Pulse Output (priority over PI_OUT_FRC0) Typically set by Firmware for Error Indication	BIT	0
8	**PI_OUT_FRC0:** Forces Low on Pulse Output (unless PI_OUT_FRC1 is set) Typically set by Firmware for Zero Flow	BIT	0
7	*Not used*		
6:0	**GPO:** General Purpose Out	UINT [6:0]	0

7.4.3 SHR_PI_NPULSE (Pulse Interface Number of Pulses) 0x0D4

Bit	Description	Format	Reset
31:0	**PI_NPULSE:** Number of Pulses 1 LSB: $1/2^{24}$	SINT [31:0]	0

7.4.4 SHR_PI_TPA (Pulse Interface Time Pulse Distance) 0x0D5

Bit	Description	Format	Reset
31:16	*Not used*		
15:0	**PI_TPA:** Minimal distance between two pulses 1 LSB: 976.5625 µs (LP_MODE = 1) 1 LSB: 1 ms (LP_MODE = 0) Mandatory condition: PI_TPA > PI_TPW	UINT [15:0]	0

7.4.5 SHR_PI_IU_TIME (Pulse Interface Internal Update Time Distance) 0x0D6

Bit	Description	Format	Reset
31:16	*Not used*		
15:0	**PI_IU_TIME:** Time between 2 Internal Updates 1 LSB: 976.5625 µs (LP_MODE = 1) 1 LSB: 1 ms (LP_MODE = 0) Mandatory condition: PI_IU_TIME > 2 and PI_IU_TIME > PI_TPW	UINT [15:0]	0

7.4.6 SHR_PI_IU_NO (Pulse Interface Number of Auto Updates) 0x0D7

Bit	Description	Format	Reset
31:8	*Not used*		
7:0	**PI_IU_NO:** Number of Internal Updates between 2 General Updates Recommended condition for uniformed pulse generation: (PI_IU_NO + 1) * PI_IU_TIME = TOF_RATE * MR_CT	UINT [7:0]	0

7.4.7 SHR_TOF_START_HIT_DLY (TOF Start Hit Delay) 0x0D8

Bit	Description	Format	Reset
31:19	*Not used*		
18:0	**TOF_START_HIT_DLY:** Delay window after which next detected hit is defined to TOF start hit. Starting time of delay window refers to rising edge of 1st fire pulse 1 LSB: 7.8125 ns (HS_CLK: 4 MHz) 3.90625 ns (HS_CLK: 8 MHz)	UINT [18:0]	0

7.4.8 SHR_ZCD_LVL (Zero Cross Detection Level) 0x0D9

Bit	Description	Format	Reset
31:10	*Not used*		
9:0	**ZCD_LVL:** Zero Cross Detection Level 1 LSB: ~ 0.88 mV	UINT [9:0]	0

7.4.9 SHR_FHL_U (First Hit Level Up) 0x0DA

Bit	Description	Format	Reset
31:8	*Not used*		
7:0	**ZCD_FHL_U:** First Hit Level Up 1 LSB ~ 0.88 mV	UINT [7:0]	0

7.4.10 SHR_FHL_D (First Hit Level Down) 0x0DB

Bit	Description	Format	Reset
31:8	*Not used*		
7:0	**ZCD_FHL_D:** First Hit Level Down 1 LSB ~ 0.88 mV	UINT [7:0]	0

7.4.11 SHR_CPU_REQ (CPU Requests) 0x0DC

This register is automatically cleared when the CPU stops operation, typically due to a stop command. All bits are typically triggered by the task sequencer, the error handling, a general purpose pin or the remote control.

For test or debugging purposes it is also possible to write directly to these registers.

Bits have to be cleared by the system program code or the user program code.

Bit	Description	Format	Reset
31:6	*Not used*		
5	**CPU_REQ_FW_INIT:** CPU Request Firmware Initialization 0: Firmware Initialization not requested 1: Firmware Initialization requested Initially triggered by Bootloader	BIT-T	b0
4	**CPU_REQ_GPH:** CPU Request General Purpose Handling 0: General Purpose Handling in CPU not requested 1: General Purpose Handling in CPU requested - Synchronously triggered via Task Sequencer by any General Purpose Request	BIT-T	b0
3	*not used*	BIT-T	b0
2	**CPU_REQ_PP:** CPU Request Post Processing User 0: Post Processing in CPU not requested 1: Post Processing in CPU requested - Synchronously triggered by Task Sequencer if enabled	BIT-T	b0
1	**CPU_REQ_CHKSUM:** CPU Request Build Checksum 0: Build Checksum in CPU not requested 1: Configuration Compare in CPU requested - Synchronously triggered via Task Sequencer by Checksum Timer - Asynchronously triggered by Remote Controller - Initially triggered by Bootloader	BIT-T	b0
0	**CPU_REQ_BLD_EXC:** CPU Request Bootloader Execute 0: Bootloader Subroutine in CPU not requested 1: Bootloader Subroutine in CPU requested Initially triggered by Task Sequencer after system reset	BIT-T	b0

7.4.12 SHR_EXC (Executables) 0x0DD

Executables implemented as self-clearing bits.

Bit	Description	Format	Reset
31:16	*Not used*		
15	*Not used*	SCB	0
14	**GPH_TRIG:** General Purpose Handling Trigger 0: No action 1: Triggers General Purpose Handling for CPU via Task Sequencer	SCB	0
13	**GPR_REQ_CLR:** General Purpose Request Clear 0: No action 1: Clears general purpose request via remote interface	SCB	0
12	**COM_REQ_CLR:** Communication Request Clear 0: No action 1: Clears communication request via remote interface	SCB	0

Bit	Description	Format	Reset
11	**FW_IRQ:** FW Interrupt Request 0: No action 1: Interrupt Request triggered by FW	SCB	0
10	**FW_IRQ_S:** FW Interrupt Request, synchronized with task sequencer 0: No action 1: Interrupt Request triggered by FW and synchronized with task sequencer	SCB	0
9	**ZCC_RNG_CLR:** Zero Cross Calibration Range Clear 0: No action 1: Clears Zero Cross Calibration Range	SCB	0
8	*Not used* **Has to be set 0**	SCB	0
7	**E2P_CLR:** E2P Clear 0: No action 1: Clears E2P interface	SCB	0
6	**BG_REFRESH:** Bandgap Refresh 0: No action 1: Bandgap Refresh	SCB	0
5	**PI_UPD:** Pulse Interface Update 0: No action 1: Updates Pulse Interface	SCB	0
4	**TSV_UPD:** Time Stamp Value Update 0: No action 1: Update Time Stamp Value	SCB	0
3	**TSC_CLR:** Time Stamp Clear 0: No action 1: Clears Time Stamp Counter	SCB	0
2	**FES_CLR:** Frontend Status Clear 0: No action 1: Clears Frontend Status Register SRR_FEP_STF	SCB	0
1	**EF_CLR:** Error Flag Clear 0: No action 1: Clears Error Flag Register SRR_ERR_FLAG	SCB	0
0	**IF_CLR:** Interrupt Flag Clear 0: No action 1: Clears Interrupt Flag Register SRR_IRQ_FLAG	SCB	0

7.4.13 SHR_RC (Remote Control) 0x0DE

The remote control register is implemented with radio buttons and self-clearing bits. It is used when operating in time conversion mode accessed by remote control. Radio buttons have the advantage in that single states of the register settings can be changed without knowing the complete state of the register. This saves a pre-reading of the register when operating in remote mode.

To change a dedicated bit write a 1 to this one and a 0 to all others.

Bit	Description	Format	Reset
31:21	*not used*		
20	**FWD_RECALL:** Recalls Firmware Data 0: No action 1: Starts recalling of Firmware Data from Flash to SRAM Execution needs to be enabled by SHR_FW_TRANS_EN	SCB	0
19	**FWC_RECALL:** Recalls Firmware Program Code 0: No action 1: Starts recalling of Firmware Program Code from Flash to SRAM Execution needs to be enabled by SHR_FW_TRANS_EN	SCB	0
18	**FW_ERASE:** Erases User Firmware Program Code & Firmware Data 0: No action 1: Starts erasing User Firmware Program Code & Data Execution needs to be enabled by SHR_FW_TRANS_EN	SCB	0
17	**FW_STORE_LOCK:** Stores & Lock User Firmware Program Code & Firmware Data 0: No action 1: Starts storing & locking of User Firmware Program Code & Data Execution needs to be enabled by SHR_FW_TRANS_EN	SCB	0
16	**FW_STORE:** Stores User Firmware Program Code & Firmware Data 0: No action 1: Starts storing of Firmware User Program Code & Data Execution needs to be enabled by SHR_FW_TRANS_EN	SCB	0
15:14	*not used*		
13:12	**FWD1_MODE:** Firmware Data 1 Mode 00: No Change of FWD1_MODE state (WO) 01: FWD1 Read disabled when GP30 will be protected 10: FWD1 Read enabled when GP30 will be protected 11: No Change of FWD1_MODE state (WO)	RB	b01
11:10	**BG_MODE:** Bandgap Mode 00: No Change of BG_MODE state (WO) 01: Bandgap controlled as configured 10: Bandgap always on 11: No Change of BG_MODE state (WO)	RB	b01
9:8	**HSO_MODE:** High Speed Oscillator Mode 00: No Change of HSO_MODE state (WO) 01: HSO controlled as configured 10: HSO always on 11: No Change of HSO_MODE state (WO)	RB	b01
7:6	**DBG_EN:** Debug Enable 00: No Change of DBG_EN state (WO) 01: Debug Mode disabled 10: Debug Mode enabled 11: No Change of DBG_EN state (WO)	RB	b01

Bit	Description	Format	Reset
5:4	**UART_CRC_MODE:** UART CRC Mode 00: No Change of UART_CRC_MODE state (WO) 01: UART_CRC_MODE default 10: UART_CRC_MODE as configured 11: No Change of DBG_EN state (WO)	RB	b01
3:2	**HS_CLK_SEL:** High Speed Clock Select. 00: No Change of HS_CLK_SEL state (WO) 01: If 4 MHz clock source, has to be initially configured after reset 10: If 8 MHz clock source 11: No Change of HS_CLK_SEL state (WO) **Note: In the typical case of a 4 MHz reference, the user actively has to change the default setting to b01 after a power on or watchdog rest.**	RB	b10
1:0	**CFG_OK:** GP30 Configuration OK 00: No Change of CFG_OK state (WO) 01: GP30 not properly configured 10: GP30 properly configured 11: No Change of CFG_OK state (WO)	RB	b01

7.4.14 SHR_FW_TRANS_EN (Firmware Transaction Enable) 0x0DF

Bit	Description	Format	Reset
31:0	**FW_TRANS_EN:** Firmware Transaction Enable Code to enable transactions of firmware into NVRAMs: h50F5_B8CA Write only register Status of this register can be checked in FW_TRANS_EN in register SRR_MSC_STF	BIT32	hAF0A_7435

7.5 Status Registers

7.5.1 SRR_IRQ_FLAG (Interrupt Flags) 0x0E0

Bit	Description	Format	Reset
31:8	*Not used*		
7	**ERR_FLAG:** At least 1 error flag is set	BIT	b0
6	**DBG_STEP_END:** Debug Step Ended	BIT	b0
5	**FW_IRQ:** Firmware Interrupt Request	BIT	b0
4	**FW_IRQ_S:** Firmware Interrupt Request, synchronized with task sequencer	BIT	b0
3	**CHKSUM_FNS:** Checksum Subroutine Finished	BIT	b0
2	**BLD_FNS:** Bootloader Finished	BIT	b0
1	**FW_TRANS_FNS:** Firmware Transaction Finished	BIT	b0
0	**TSQ_FNS:** Task Sequencer Finished	BIT	b0

7.5.2 SRR_ERR_FLAG (Error Flags) 0x0E1

Bit	Description	Format	Reset
31:16	*Not used*		
15	**EF_CS_FWA_ERR:** Error Flag FWA Checksum	BIT	b0
14	**EF_CS_FWU_ERR:** Error Flag FWU Checksum	BIT	b0
13	**EF_CS_FWD2_ERR:** Error Flag FWD2Checksum	BIT	b0
12	**EF_CS_FWD1_ERR:** Error Flag FWD1Checksum	BIT	b0
11	*Not used*	BIT	b0
10	**EF_E2P_ACK_ERR:** Error Flag EEPROM Acknowledge	BIT	b0
9	**EF_TSQ_TMO:** Error Flag Task Sequencer Timeout	BIT	b0
8	**EF_TM_SQC_TMO:** Error Flag Temperature Sequence Timeout	BIT	b0
7	**EF_USM_SQC_TMO:** Error Flag Ultrasonic Sequence Timeout	BIT	b0
6	**EF_LBD_ERR:** Error Flag Low Battery Detect	BIT	b0
5	**EF_ZCC_ERR:** Error Flag Zero Cross Calibration	BIT	b0
4	**EF_TM_SC_ERR:** Error Flag Temperature Measurement Short Circuit	BIT	b0
3	**EF_TM_OC_ERR:** Error Flag Temperature Measurement Open Circuit	BIT	b0
2	**EF_AM_TMO:** Error Flag Amplitude Measurement Timeout	BIT	b0
1	**EF_TOF_TMO:** Error Flag TOF Timeout	BIT	b0
0	**EF_TDC_TMO:** Error Flag TDC Timeout	BIT	b0

7.5.3 SRR_FEP_STF (Frontend Processing Status Flags) 0x0E2

Bit	Description	Format	Reset
31:10	*Not used*		
9	**US_AMC_UPD**: Ultrasonic Update for AMC measurement 0: No update in frontend buffer 1: Updated value in AMC area of frontend buffer	BIT	b0
8	**US_AM_UPD**: Ultrasonic Update for AM measurement 0: No update in frontend buffer 1: Updated value in AM area of frontend buffer	BIT	b0
7	**US_TOF_EDGE**: TOF Measurement Edge 0: Positive Edge 1: Negative Edge	BIT	b0
6	**US_TOF_UPD**: Ultrasonic Update for TOF measurement 0: No update in frontend buffer 1: Updated value in TOF area of frontend buffer	BIT	b0
5	**US_D_UPD**: Ultrasonic Update in Down direction 0: No update in frontend buffer 1: Updated value in ultrasonic down area of frontend buffer	BIT	b0
4	**US_U_UPD**: Ultrasonic Update in Up direction 0: No update in Frontend Buffer 1: Updated value in ultrasonic up area of frontend buffer	BIT	b0
3	**TM_ST:** Temperature Measurement Subtask 0: Temperature Measurement with 1 subtask 1: Temperature Measurement with 2 subtasks	BIT	b0
2	**TM_MODE:** Temperature Measurement Mode 0: External Measurement 1: Internal Measurement	BIT	b0
1	**TM_UPD:** Temperature Measurement Update 0: No update in Frontend Buffer 1: Updated value in Temp Measure related Frontend Buffer	BIT	b0
0	**HCC_UPD:** High-Speed Clock Calibration Update 0: No update in SRR_HCC_VAL 1: Updated value in SRR_HCC_VAL	BIT	b0

7.5.4 SRR_GPI (General Purpose In) 0x0E3

Bit	Description	Format	Reset
31:12	*Not used*		
11	**LS_CLK_S:** Low Speed Clock, synchronized to CPU Clock	BIT	
10	**NVM_RDY:** NVRAM Ready	BIT	
9	**UART_SEL:** UART Select	BIT	
8	**LP_MODE:** Low Power Mode. Equals the signal on pin LP_MODE during operation. Note: Signal goes low during startup after power on, including firmware initialization.	BIT	
7	*not used*		

Bit	Description	Format	Reset
6:0	**GPI:** General Purpose In	BIT7	0

7.5.5 SRR_HCC_VAL (High-Speed Clock Calibration Value) 0x0E4

Bit	Description	Format	Reset
31:26	*Not used*		
25:0	**HCC_VAL:** High-Speed Clock Calibration Value Measures the time of 4 LS_CLK periods: 122.07 µs 1 LSB: 250 ns / 2^{16} (if f_{HS_CLK} = 4 MHz) 1 LSB: 125 ns / 2^{16} (if f_{HS_CLK} = 8 MHz)	UINT [25:0]	0

7.5.6 SRR_VCC_VAL (V_{CC} Value) 0x0E5

Bit	Description	Format	Reset
31: 6	*Not used*		
5:0	**VCC_VAL:** Measured value of V_{CC} voltage 1 LSB: 25 mV VCC_VAL = 0: 2.13 V VCC_VAL = 63: 3.70 V	UINT [5:0]	0

7.5.7 SRR_TS_HOUR (Time Stamp Hours) 0x0E6

Bit	Description	Format	Reset
31:18	*Not used*		
17:0	**TS_HOUR:** Timestamp Hours 1 LSB: 1h	UINT [17:0]	0

7.5.8 SRR_TS_MIN_SEC (Time Stamp Minutes & Seconds) 0x0E7

Bit	Description	Format	Reset
31:16	*Not used*		
15:8	**TS_MIN:** Timestamp Minutes 1 LSB: 1min Range (0-59)	UINT [7:0]	0
7:0	**TS_SEC:** Timestamp Seconds 1 LSB: 1sec Range (0-59)	UINT [7:0]	0

7.5.9 SRR_TOF_CT (Time of Flight, Cycle Time) 0x0E8

Bit	Description	Format	Reset
31:13	*Not used*		

Bit	Description	Format	Reset
12:0	**TOF_CT:** TOF Cycle Time Cycle Time = TOF_CT * 976.5625 µs (LP_MODE = 1), = TOF_CT * 1 ms (LP_MODE = 0)	UINT [12:0]	0

7.5.10 SRR_TS_TIME (Task Sequencer time) 0x0E9

Bit	Description	Format	Reset
31:12	*Not used*		
11:0	**TS_TIME:** Task Sequencer Time Current Time = TS_TIME * 976,5625 µs (LP_MODE = 1), = TS_TIME* 1 ms (LP_MODE = 0)	UINT [11:0]	0

7.5.11 SRR_MSC_STF (Miscellaneous Status Flags) 0x0EA

Bit	Description	Format	Reset
31:16	*Not used*		
15	**WD_DIS:** Watchdog Disabled	BIT	b0
14	**E2P_BSY:** E2P Busy	BIT	b0
13	**E2P_ACK:** EEPROM Acknowledge	BIT	b0
12	**HSO_STABLE:** High Speed Oscillator Stable	BIT	b0
11	*Not used*	BIT	b0
10	**CST_REQ:** Request by Checksum Timer	BIT	b0
9	*Not used*	BIT	b0
8	*Not used*	BIT	b0
7	**GPH_REQ:** General Purpose Request by GPH_TRIG in SHR_EXC	BIT	b0
6	**GPT_REQ:** General Purpose Request by GP Timer	BIT	b0
5	**GPR_REQ**: General Purpose Request by remote interface	BIT	b0
4	**COM_REQ:** Communication Request by remote interface	BIT	b0
3	**FWD1_RD_EN:** FWD1 Read Enabled	BIT	b0
2	**FW_UNLOCKED:** FW Unlocked	BIT	b0
1	**FW_STORE_ALL**: FW Store All	BIT	b0
0	**FW_TRANS_EN:** FW Transaction Enabled	BIT	b0

7.5.12 SRR_E2P_RD (EEPROM Read Data) 0x0EB

Bit	Description	Format	Reset
31:8	*not used*		

Bit	Description	Format	Reset
7:0	**E2P_DATA:** EEPROM Read Data Read Data from external EEPROM connected via EEPROM interface	BIT8	0

7.5.13 SRR_FWU_RNG (FW User Range) 0x0EC

Bit	Description	Format	Reset
31:12	*Not used*		
11:0	**FWU_RNG:** FW User Range Number of FW Code addresses which are reserved for FW User Code starting at address 0.	UINT [11:0]	0

7.5.14 SRR_FWU_REV (FW User Revision) 0x0ED

Bit	Description	Format	Reset
31:0	**FWU_REV:** FW User Revision Last 4 Bytes in FW User Code Range, reserved for revision.	BIT32	0

7.5.15 SRR_FWA_REV (FW ACAM Revision) 0x0EE

Bit	Description	Format	Reset
31:0	**FWA_REV:** FW ACAM Revision 4 Bytes in FW ACAM Code Range, reserved for revision.	BIT32	0

7.5.16 SRR_LSC_CV (Low Speed Clock Count Value) 0x0EF

Bit	Description	Format	Reset
6:0	**LSC_CV:** Low Speed Clock Count Value	BIT7	0

8 Applications

8.1 GP30-DEMO Board

For Ultrasonic Heat/Water Meter with 2-Wire Temperature Measurement

The following diagram shows the complete schematics of a heat meter front end. For details refer to the GP30-DEMO-KIT datasheet.

Figure 8-1 Complete schematics of the GP30 DEMO board:

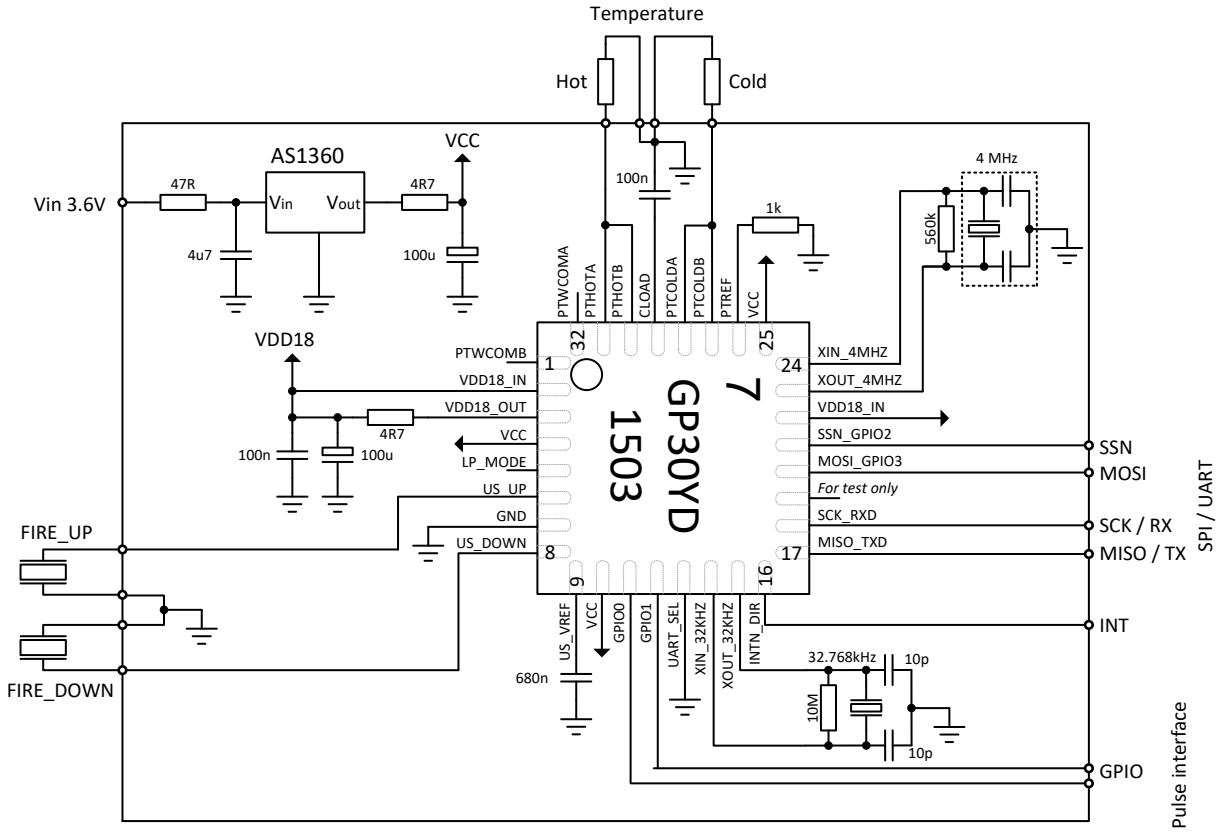

8.2 GP30 Typical Configuration

The following table shows a typical configuration as it is used in our example that simply calculates the DIFTOF and converts this to an output via the pulse interface (DIF_over_PI.cfg).

Table 8-1 Typical configuration

Register	Address	Content	Main settings
CR_WD_DIS	0xC0	0xAF0A7435	Watchdog enabled
CR_PI_E2P	0xC1	0x0034310A	Pulse interface enabled, with update over PI_UPD…
CR_GP_CTRL	0xC2	0x81111144	GPIO0 and GPIO1 set for pulse interface; pulls ups activated on inputs to avoid floating gates
CR_UART	0xC3	0x00001000	Not used
CR_IEH	0xC4	0x011F03FF	Various triggers for interrupt and error are set
CR_CPM	0xC5	0x00280AE8	Voltage measurement disabled. 4 MHz high speed clock, calibrated every 20th sequence, settling time 135µs
CR_MRG_TS	0xC6	0x00016080	Back timer and checksum timer disabled, bandgap synchronized, MR_CT = 253 (~247ms)
CR_TM	0xC7	0x00F99400	Temperature measurement off
CR_USM_PRC	0xC8	0x00002824	Ultrasonic measurement, 20ms between TOF_UP and TOF_DOWN, toggling direction, noise window 40.6 µs, 128 µs timeout
CR_USM_FRC	0xC9	0x03E48C83	25 pulses at 1 MHz
CR_USM_TOF	0xCA	0x00000C10	First hit mode, starting with 9th hit, 12 hits, no ignored ones, positive edges
CR_USM_AM	0xCB	0x0000DE81	Amplitude measurement with every TOF for 8 hits, calibration every 20th
CR_TRIM1	0xCC	0x84A0C47C	Trim bits as recommended
CR_TRIM2	0xCD	0x401700CF	Trim bits as recommended
CR_TRIM3	0xCE	0x00270808	Trim bits as recommended
SHR_TOF_RATE	0xD0	0x00000001	TOF rate = 1
SHR_TOF_START_HIT_DLY	0xD8	0x00000000	Start hit delay window = 0 (not active)
SHR_ZCD_FHL_U	0xDA	0x00000055	First hit level up = 85 (~ 74.8 mV)
SHR_ZCD_FHL_D	0xDB	0x00000055	First hit level down = 85 (~ 74.8 mV)

9 Glossary

Terms	Meaning	GP30 interpretation
AM	Amplitude measurement	This is a peak measurement of the received signal amplitude. It can be configured to be executed in different time frames, which allows to pick the overall signal maximum (to control the signal level), or to measure only the peak of a selected number of ->wave periods. The latter allows for a more detailed receive signal analysis.
Backup	Permanent storage of a data copy	GP30 is prepared for an external data backup, foreseen over the built-in I2C-bus, which permits write and read with an external EEPROM. In principle, a user may also utilize the ->GPIOs for his own interface implementation for external backup.
Bootloader	System routine that initializes CPU operation	Typically after a system reset, first time when the ->TS calls the ->CPU, the bootloader routine is called. If the -> Firmware is released, the bootloader loads the chip configuration from FWD into CR and does other hardware initialisations like reading firmware revision numbers and calculation of checksums.
Burst	Analog signal containing a number of ->wave periods	For a flow measurement, a ->fire burst, that means a fixed number of ->wave periods of the measurement frequency, is send over a ->transducer into the flow medium. After some travel time (see ->TOF), a receive burst appears at the opposed transducer, which is detected as a number of ->hits. Note that the peak amplitude of the receive burst must not exceed -> V_{ref} to avoid negative voltages.
Calibration	Parameter adjustment to compensate variations	In GP30, different calibration processes are implemented and needed for high quality measurements: ->Firmware calibrations: Flow and temperature calibration, but also the ->FHL adjustment are under full control of the firmware. Half-automated calibrations: ->AM calibration and ->HSO calibration are based on dedicated measurements, initiated by the ->TS on demand. The actual calibrations need further evaluation by the firmware. Fully hard-coded calibrations: these calibrations need no interaction from firmware. One example is ->ZCD level calibration, which only needs to be initiated by the ->TS frequently. Another example is ->TDC calibration which happens automatically before each measurement.
CD	Configuration Data	16 x (up to) 32b words of ->flash memory for configuration of the chip, address range 0x16C - 0x17A (->NVRAM). Is copied to ->CR for actual usage.
Comparator	Device that compares two input signals	See ->ZCD-comparator
CPU	Central Processing Unit	32b processor (Harvard architecture type) for general data processing. The CPU has a fixed instruction set and acts directly on its three input- and result-registers ->X,Y and Z as well as on addressed RAM. The fourth register of the CPU is the ->RAM address pointer R. Instructions for the CPU are read as -> FWC or ->ROM code at an address given by the ->program counter.
CR	Configuration Register	The chip actually uses for its hardware configuration a copy of the ->CD into the CR address range 0x0C0 - 0x0CF (see ->direct mapped registers).
CRC	Cyclic Redundancy Check	Method for checksum calculation to control data integrity, employed in GP30 for ->UART communication.
C0G		Material of a ceramic capacitor with a very low temperature drift of capacity
DIFTOF, DIFTOF_ALL	Difference of up and down ->TOF	The difference between up and down ->TOF is the actual measure for flow speed. (see also ->SUMTOF). DIFTOF_ALL is the DIFTOF using ->TOF_ALL results, averaged over all TOF ->hits.

Terms	Meaning	GP30 interpretation
Direct mapped registers	Registers with direct hardware access	These register cells are not part of some fixed memory block, they rather have individual data access. This makes them suitable for hardware control. See ->SHR, ->SRR, ->CR and ->DR. Labels have the according prefix.
DR	Debug Register	Internal registers of the ->CPU, mapped to the RAA address range 0x0F8 – 0x0FB in debug mode.
FEP	Frontend Processing	Task of the ->TS where frontend measurements are performed
FDB	Frontend data buffer	Part of the -> RAM where the -> frontend temporarily stores its latest measurement results (-> RAA address range from 0x80 up to maximally 0x9B)
FHL, V_{FHL}	First hit level	Voltage level similar to the ->ZCD level, but shifted away from Zero level, for save detection of a first ->hit. The FHL determines, which of the ->wave periods of the receive -> burst is detected as first hit. It thus has a strong influence on ->TOF and must be well controlled, in order to achieve comparable TOF measurements.
Fire, fire burst, fire buffer	Send signal ->burst	The measurement signal on sending side is called fire burst, its output amplifier correspondingly fire buffer.
Firmware	Program code (in a file) for chip operation	The program code can be provided by acam or by the customer, or a combination of both. The complete program code becomes the ->FWC (firmware code) when stored in the ->NVRAM. The term firmware is in general used for all firmware programs, no matter if they make up the complete FWC or not.
Flow meter mode	Operation mode of GP30 as full flow meter system	In flow meter mode, the TDC-GP30 also performs further evaluation of ->TOF results, to calculate physical results like flow and temperature. To do this, it uses a ->firmware running on its internal CPU. See for comparison -> time conversion mode
Frontend	Main measurement circuit block	This part of the GP30 chip is the main measurement device, containing the analog measurement interface (including the -> TDC). The frontend provides measurement results which are stored in the ->FDB.
FWC	Firmware Code	Firmware code denotes the complete content of the ->NVRAM's 4kB section (address range 0x0000 to 0x 0FFF). The difference to the term ->firmware is on the one hand that firmware means the program in the file. On the other hand, a particular firmware may provide just a part of the complete FWC. FWC is addressed by the CPU's program counter, it is not available for direct read processes like RAM.
FWD	Firmware Data	The firmware configuration and calibration data, to be stored in the ->FWD-RAM
FWD-RAM	Firmware Data memory	128 x 32b words of ->NVRAM (built as volatile ->SRAM and non-volatile flash memory). The FWD-RAM is organized in two address ranges, FWD1 (-> RAM addresses 0x100 - 0x11F) and FWD2 (RAM addresses 0x120 – 0x17F). Main purpose is calibration and configuration Due to its structure, FWD-RAM can be used like usual ->RAM by the firmware. But note that with every data recall from flash memory the contents of the SRAM cells get overwritten.
GPIO	General purpose input/output	GP30 has up to 7 GPIO pins which can be configured by the user. Some of them can be configured as ->PI or ->I2C-interface.

Terms	Meaning	GP30 interpretation
Hit	Stands for a detected wave period	The receive ->burst is typically a signal which starts with ->wave periods of the measurement frequency at increasing signal levels. While the first of these wave periods are too close to noise for a reliable detection, later signal wave periods with high level can be detected safely by the ->ZCD-comparator. The comparator converts the analog input signal into a digital signal, which is a sequence of hits. To detect the first hit at an increased signal level, away from noise, the input signal is compared to the ->FHL. After the first hit, the level for comparison is immediately reduced to the ->ZCD level, such that all later hits are detected at zero crossing (note that the ZCD level is defined to zero with respect to the receive signal, it is actually close to -> V_{ref} or another user-defined level). Different hits are denoted according to their usage: ▪ Hit (in general) stands for any detected ->wave period. ▪ First hit is actually the first hit in a ->TOF measurement (not the first wave period!) ▪ TOF hits means all hits which are evaluated for ->TOF measurements. Note that typically the first hit is not a TOF hit. ▪ Start hit is the first TOF hit. This is typically not the first hit, but (according to configuration) some well-defined later hit. Minimum the 3rd hit has to set as Start hit. ▪ Stop hit is the last TOF hit. It is also defined by configuration and should not be too close to the end of the receive ->burst. ▪ Ignored hits are all hits which are not evaluated for the TOF measurement: All hits between first hit and start hit, as well any hit between TOF hits or after the stop hit.
HSO	High speed oscillator	The 4 or 8 MHz oscillator of the GP30. In usual operation only switched on when needed, to reduce energy consumption. This is the time base for ->TDC measurements. The HSO is typically less accurate that the ->LSO. It should be frequently ->calibrated against the LSO to obtain the desired absolute accuracy of the ->TDC.
INIT	Initialization process of ->CPU or -> FEP	In GP30 terminology, INIT processes don't reset registers or digital IOs, while -> reset does at least one of it. Several different INIT processes are implemented, see chapter "Reset hierarchy" for details.
IO	Input/output	Connections to the outside world for input or output
I2C	Inter-Integrated Circuit bus	Standard serial bus for communication with external chips. Implemented in GP30 only in part for EEPROM data exchange.
LSO	Low speed oscillator	The 32768 Hz crystal oscillator of the GP30. This oscillator controls the main timing functions (->MRG and ->TS, real time clock).
MRG	Measurement Rate Generator	The measurement rate generator controls the cyclic ->tasks of GP30 by setting task requests in a rate defined by configuration (->CR). When the MRG is activated, it periodically triggers the ->TS for initiating the actual ->tasks.
NVRAM, NVM	Programmable Non-Volatile Memory	GP30 contains two sections of programmable non-volatile memory: One section of 4kB ->FWC memory, and another of ->FWD-RAM (FWD1:-> RAM addresses 0x100 - 0x11F and FWD2: RAM addresses 0x120 – 0x17F), in total 128 x 32b words. It is organized as a volatile SRAM part which is directly accessed from outside, and a non-volatile flash memory part.
PI	Pulse interface	Standard 2-wire interface for flow output of a water meter. Typically outputs one pulse per some fixed water volume (e.g. one pulse per 0.1 l), while the other wire signals the flow direction. Permits stand-alone operation and is fully compatible to mechanical water meters.
PP	Post Processing	Processing activities of the -> CPU, typically after frontend processing (e.g. a measurement) , initiated by –>TS

Terms	Meaning	GP30 interpretation
Program counter	Pointer to the current code address of the ->CPU	The program counter addresses the currently evaluated ->FWC or ->ROM-code cell during ->CPU operation The program counter always starts at 0xF000, when any CPU action is requested. If any kind of firmware code execution is requested, the program counter is continued at 0x0000 (for FW initialization, post processing or general purpose handling).
PWR	Pulse width ratio	Width of the pulse following the first ->hit, related to the pulse width at the start hit. This width indicates the position of the ->FHL relative to the level of the detected ->wave period and thus gives some information on detection safety (small value means FHL is close to the peak amplitude and the desired wave period may be missed due to noise; large value indicates the danger that an earlier wave period may reach FHL level and trigger the first hit before the desired wave period).
R	RAM address pointer of the CPU	The ->CPU acts on the data of the ->X-,Y- and Z-register and on one single RAM cell. The pointer R defines the address of the current RAM cell.
RAA	Random Access Area	Address range from 0x000 to 0x1FF covering the ->RAM addresses. Memory cells within this address range can all be read, most of them can also be written (except ->SRR and ->DR). The RAA covers memory cells of different technology: ->RAM (including ->FDB), ->FWD-RAM (including ->CD), ->direct mapped registers (->SHR, ->SRR, ->CR and ->DR).
RAM	Random Access Memory	176 x 32b words of volatile memory, used by ->FDB and -> Firmware. Address range 0x000 to 0x0AF
RAM address	Address of a cell in the RAA range	A RAM address is used by the firmware or over ->RI to point to a memory cell for data storage or retrieval. Note that RAM addresses cover not only actual RAM, but all cells in the RAA range. Address range from 0x000 to 0x1FF
Register	Memory cell for dedicated data storage	Memory cells are typically called register when they contain flags or configuration bits, or when they have a single dedicated purpose (see ->CPU, ->CR, ->SHR and ->SRR).
Reset	Reset of the chip	GP30 has different processes and commands that can call resets and initializations at different levels. Some of them refresh ->CR or GPIO state, others just (re-) initialize CPU or frontend. The latter are rather denoted ->INIT. See chapter “Reset hierarchy” for details.
RI	Remote Interface	Interface for communication with a remote controller (see ->SPI and ->UART)
ROM	Read Only Memory	4kB of fixed memory, contains hard coded routines for general purpose and parts of acam’s ->firmware (ROM code). Address range 0xF000 – 0xFFFF. The ROM code is addressed by the CPU’s program counter, it is not available for direct read processes like RAM.
ROM code	Hard coded routines in ROM	See -> ROM.
SCL	Serial Clock	Serial clock of EEPROM interface
SDA	Serial Data	Serial data of EEPROM interface
SHR	System Handling Register	Registers that directly control chip operation. The data & flags of system handling registers have a dynamic character. They are typically updated by post processing, but have to be initially configured before measurement starts.
SPI	Serial Peripheral Interface	Standard interface for communication of the GP30 with an external master controller (alternative to ->UART).
SRAM	Static RAM	GP30 does not use any dynamic RAM, in fact all RAM in GP30 is static RAM. However, the term “SRAM” is in particular used for the RAM-part of the ->NVRAM.
SRR	Status & Result Register	The SRR-registers describe the current state of the chip. They are set by the chip hardware and contain error and other condition flags, timing information and so on.

Terms	Meaning	GP30 interpretation
SUMTOF, SUMTOF_ALL	Sum of up and down TOF	The sum of up and down ->TOF is a measure for the speed of sound in the medium, which can be used for temperature calculation. SUMTOF_ALL is the SUMTOF using ->TOF_ALL results, averaged over all TOF ->hits.
Supervisor	Functional block of GP30 that controls voltage and timing	The supervisor of TDC-GP30 controls chip operation and timing through the measurement rate generator (->MRG) and the task sequencer (–>TS). It also covers voltage control and adjustment functions as well as the main oscillators -> LSO and ->HSO
Task	Process, job	The term task is used for a process which aims at fulfilling some fixed purpose, separate from other tasks with different goals. Typical tasks in GP30 are ->TOF measurement, temperature measurement (-> TM), post processing (-> PP), remote communication and voltage measurement.
Time conversion mode	Remotely controlled operation of GP30	In time conversion mode, the TDC-GP30 mainly acts as a ->TOF measurement system. It may operate self-controlled or remotely controlled, but it does no further result evaluation. This operation mode is similar to the typical usage of the acam chips GP21 and GP22. For comparison see ->Flow meter mode
TDC	Time-to-digital-converter	The core measurement device of GP30. Measures times between a start- and a stop-signal at high accuracy and high resolution. The internal fast time base of the TDC is automatically ->calibrated against the ->HSO before each measurement.
TOF, TOF_ALL	Time of Flight	Basic measurement result for an ultrasonic flow meter: The time between send and receive ->burst (with some offset, depending on ->hit detection). Measurements of TOF are done in flow direction (down TOF) and in the opposite direction (up TOF). GP30 also provides the sum of all TOF ->hits in the values TOF_ALL.
TS	Task Sequencer	The task sequencer arranges and initiates the ->tasks which are requested by the ->MRG in one measurement cycle or which are initiated remotely.
TM	Temperature measurement	This task means a temperature measurement using sensors, in contrast to temperatures which are calculated results from a TOF measurement (see -> SUMTOF)
Transducer	Electromechanical conversion device	Transducers for flow measurements are piezoelectric devices that convert an electrical signal into ultrasound and reverse. They are usually matched to the flow medium (e.g. water). GP30 can connect directly to the send and receive transducer.
UART	Universal Asynchronous Receiver & Transmitter	Standard interface for communication of the GP30 with an external master controller (alternative to ->SPI).
USM	Ultrasonic measurement	The principle of an ultrasonic flow meter is to measure ->TOFs of ultrasound in flow direction and against it, and to calculate the flow from the result. See also ->transducer.
V_{ref}	Reference voltage	The analog interface of GP30 refers to V_{ref}, a nominal voltage for -> V_{ZCD} of typically 0.7V. This makes it possible to receive a DC-free AC-signal with a single supply voltage. Up to the level of V_{ref}, negative swings of the receive signal are avoided.
V_{ZCD}	Zero cross detection level	This voltage level represents the virtual zero line for the receive ->burst. It is normally close to -> V_{ref}, just differing by the offset of the ->ZCD-comparator. Needs frequent ->calibration to compensate the slowly changing offset. Optionally, this voltage can be configured differently in **SHR_ZCD...** through the firmware.
Watchdog, watchdog clear	Reset timer for chip re-initialization	The watchdog of GP30 ->resets the chip (including ->CR refresh) if no watchdog clear (->firmware command ***clrwdt***) within 13.2s (typically) is executed. This is a safety function to interrupt hang-up situations. It can be disabled for remote control, when no firmware clears the watchdog automatically.

Terms	Meaning	GP30 interpretation
Wave period	One period of the signal wave	A period of typically 1us length for a 1 MHz measurement frequency. This may be a digital pulse, for example when sending, or a more sinusoidal wave when receiving. Fire or receive ->bursts are sequences of wave periods.
X-, Y- and Z-register	Input- and result registers of the CPU	The ->CPU acts on these ->registers for data input and result output.
ZCD	Zero cross detection	All ->hits following the first hit are detected when the received signal crosses a voltage level V_{ZCD}, defined as zero with respect to the receive ->burst. In contrast, the first hit is detected when the received signal crosses the different voltage level V_{FHL}(->FHL).
ZCD-Comparator	->comparator for ->hit detection	The ZCD-comparator in GP30 detects ->hits in the received -> burst signal by comparing the received signal level to a given reference voltage (see also -> FHL, ->ZCD and ->hit).

10 Miscellaneous

10.1 Bug Report

10.1.1 Communication Request Flag

Error description	COM_REQ bit in SRR_MSC_STF register might be set back in an uncontrolled manner, depending on the communication. In consequence, GP30 allows only a single response to a remote communication request.
Work around	Avoid any further communication after sending a remote command request (RC_COM_REQ), until the interrupt is set. Users have to reset the flag COM_REQ_CLR (bit 12) in register SHR_EXC. In TDC-GP30-F01 with firmware versions A1.A2.11.04 the bit is reset by the firmware.

10.2 Last Changes from 0.4 to current version 5

05.05.2020	SHR_FHL_xx format changed from SINT to UINT
	ScioSense contacts replacing ams AG / acam-messelectronic GmbH
	1.3 Ordering numbers extended

PRELIMINARY

ScioSense B.V.
High Tech Campus 10
5656 AE Eindhoven
The Netherlands
info@sciosense.com
www.sciosense.com
Tel. +31 40 851 6435
Tel. +40 7244 7419 0

Mouser Electronics

Authorized Distributor

Click to View Pricing, Inventory, Delivery & Lifecycle Information:

ScioSense:

TDC-GP30YA-F01 1K

Looking for pricing, stock, or lifecycle information?

Click below to explore more details on WIN SOURCE:

- View TDC-GP30YA-F01 1K on WIN SOURCE
- ScioSense Information

Optimize Your Supply Chain with WIN SOURCE Solutions

- Global Sourcing Solution
- Obsolete Management
- Cost Control Management
- Shortage Management
- Alternative Solution
- Excess Inventory Management