THE DATASHEET OF

JCB0305D12

www.win-source.net 0086-755-83957316

3 Watts

JCB Series

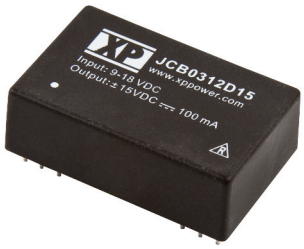

- 2:1 Input Range
- Operating Temperature –40 °C to +100 °C
- Single & Dual Outputs
- 1500 VDC Isolation
- Optional Isolation to 3000 VDC
- Optional Metal Case
- 3 Year Warranty

Specification

Input

Input Voltage Range	• 5 V (4.5-9 VDC) 12 V (9-18 VDC) 24 V (18-36 VDC) 48 V (36-72 VDC)
Input Current	• See table
Input Filter	• Pi network
Input Reflected Ripple	• 35 mA pk-pk through 12 µH inductor
Input Surge	• 5 V models 15 VDC for 100 ms 12 V models 24 VDC for 100 ms 24 V models 40 VDC for 100 ms 48 V models 80 VDC for 100 ms
Undervoltage Lockout	• None
Reverse Voltage Protection	• None

Output

Output Voltage	• See table
Minimum Load	• Minimum load required (see note 1)
Initial Set Accuracy	• ±1% max
Line Regulation	• ±0.5% max
Load Regulation	• ±0.5% max
Cross Regulation	• ±5% on dual output models (see note 2)
Transient Response	• <3% deviation, recovery to within 1% in 2 ms for a 50% load change
Ripple & Noise	• 60 mV pk-pk max, 20 MHz bandwidth
Short Circuit Protection	• Continuous, with auto recovery
Overvoltage Protection	• None
Overcurrent Protection	• None
Maximum Capacitive Load	• See tables
Temperature Coefficient	• ±0.02/°C max

General

Efficiency	• See tables
Isolation Voltage	• 1500 VDC Input to Output For optional high isolation version 3000 VDC (see note 3) 1500 VDC Input to Case 1500 VDC Output to Case
Switching Frequency	• 100-400 kHz variable
Isolation Resistance	• 10^9 Ω
Power Density	• 7.5 W/in^3
MTBF	• >2 MHrs to MIL-HDBK-217F at 25 °C, GB

Environmental

Operating Temperature	• -40 °C to +100 °C, derate from 100% load at +85 °C to no load at +100 °C
Case Temperature	• +100 °C max
Storage Temperature	• -40 °C to +125 °C
Humidity	• Up to 95% RH, non-condensing
Cooling	• Natural convection

EMC & Safety

Emissions	• EN55022 Class A conducted & radiated, with external components, see application note
ESD Immunity	• EN61000-4-2, level 3, Perf Criteria A
EFT/Burst	• EN61000-4-4, level 3, Perf Criteria A (see note 7)
Surge	• EN61000-4-5, installation class 3, Perf Criteria A (see note 7)
Conducted Immunity	• EN61000-4-6, 10 V rms, Perf Criteria A
Magnetic Fields	• EN61000-4-8, 1 A/m, Perf Criteria A

Models and Ratings

Input Voltage	Output Voltage	Output Current	Input Current[6] No Load	Input Current[6] Full Load	Maximum Capacitive Load	Efficiency	Model Number[3,4,5]
4.5-9 V	5.0 V	600 mA	40 mA	857 mA	2200 µF	70%	JCB0305S05
	9.0 V	333 mA	40 mA	833 mA	470 µF	72%	JCB0305S09
	12.0 V	250 mA	40 mA	810 mA	470 µF	74%	JCB0305S12
	15.0 V	200 mA	40 mA	810 mA	470 µF	74%	JCB0305S15
	24.0 V	125 mA	40 mA	857 mA	220 µF	70%	JCB0305S24
	±5.0 V	±300 mA	40 mA	869 mA	±1000 µF	69%	JCB0305D05
	±9.0 V	±167 mA	40 mA	857 mA	±220 µF	70%	JCB0305D09
	±12.0 V	±125 mA	40 mA	833 mA	±220 µF	72%	JCB0305D12
	±15.0 V	±100 mA	40 mA	810 mA	±220 µF	74%	JCB0305D15
	±24.0 V	±63 mA	40 mA	857 mA	±100 µF	70%	JCB0305D24
9-18 V	5.0 V	600 mA	20 mA	328 mA	2200 µF	76%	JCB0312S05
	9.0 V	333 mA	20 mA	324 mA	470 µF	77%	JCB0312S09
	12.0 V	250 mA	20 mA	316 mA	470 µF	79%	JCB0312S12
	15.0 V	200 mA	20 mA	316 mA	470 µF	79%	JCB0312S15
	24.0 V	125 mA	20 mA	316 mA	220 µF	79%	JCB0312S24
	±5.0 V	±300 mA	20 mA	324 mA	±1000 µF	77%	JCB0312D05
	±9.0 V	±167 mA	20 mA	320 mA	±220 µF	78%	JCB0312D09
	±12.0 V	±125 mA	20 mA	320 mA	±220 µF	78%	JCB0312D12
	±15.0 V	±100 mA	20 mA	320 mA	±220 µF	78%	JCB0312D15
	±24.0 V	±63 mA	20 mA	320 mA	±100 µF	78%	JCB0312D24
18-36 V	5.0 V	600 mA	12 mA	156 mA	2200 µF	80%	JCB0324S05
	9.0 V	333 mA	12 mA	156 mA	470 µF	80%	JCB0324S09
	12.0 V	250 mA	12 mA	152 mA	470 µF	82%	JCB0324S12
	15.0 V	200 mA	12 mA	152 mA	470 µF	82%	JCB0324S15
	24.0 V	125 mA	12 mA	156 mA	220 µF	80%	JCB0324S24
	±5.0 V	±300 mA	12 mA	160 mA	±1000 µF	78%	JCB0324D05
	±9.0 V	±167 mA	12 mA	158 mA	±220 µF	79%	JCB0324D09
	±12.0 V	±125 mA	12 mA	156 mA	±220 µF	80%	JCB0324D12
	±15.0 V	±100 mA	12 mA	156 mA	±220 µF	80%	JCB0324D15
	±24.0 V	±63 mA	12 mA	156 mA	±100 µF	80%	JCB0324D24
36-72 V	5.0 V	600 mA	8 mA	81 mA	2200 µF	77%	JCB0348S05
	9.0 V	333 mA	8 mA	80 mA	470 µF	78%	JCB0348S09
	12.0 V	250 mA	8 mA	78 mA	470 µF	80%	JCB0348S12
	15.0 V	200 mA	8 mA	78 mA	470 µF	80%	JCB0348S15
	24.0 V	125 mA	8 mA	78 mA	220 µF	80%	JCB0348S24
	±5.0 V	±300 mA	8 mA	80 mA	±1000 µF	78%	JCB0348D05
	±9.0 V	±167 mA	8 mA	79 mA	±220 µF	79%	JCB0348D09
	±12.0 V	±125 mA	8 mA	78 mA	±220 µF	80%	JCB0348D12
	±15.0 V	±100 mA	8 mA	78 mA	±220 µF	80%	JCB0348D15
	±24.0 V	±63 mA	8 mA	78 mA	±100 µF	80%	JCB0348D24

Notes

1. *Minimum load required to meet noise and ripple and initial set accuracy specifications. Below 25% load, noise and ripple increases to 200 mV pk-pk typical and load regulation to ±1% max.*
2. *Cross regulation is ±5% when one output is at 100% the other is varied between 25% and 100%.*
3. *For optional 3000 VDC isolation, add suffix '-H' to end of part number.*
4. *For optional metal case version, add suffix '-M' to end of part number, eg. JCB0324S12-HM*
5. *For alternative pin out, add suffix '-Z' to end of part number,eg. JCB0324S12-HMZ*
6. *Input current measured at nominal input voltage*
7. *A 220 µF/100 V capacitor across the input is required in order to meet EN61000-4-4 & EN61000-4-5.*

Mechanical Details and Application Notes

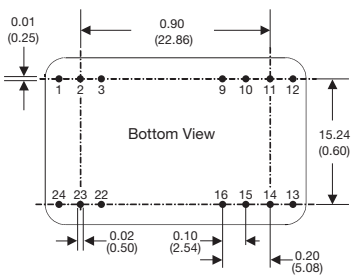

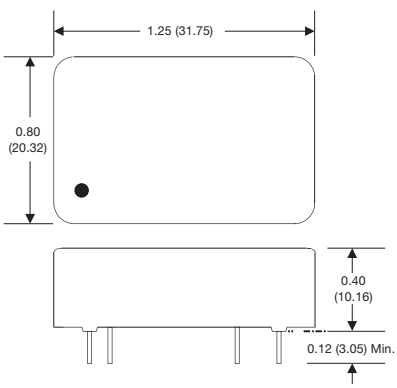

PIN CONNECTIONS						
Pin	Single	Dual	Single-H	Dual-H	Single-Z, or -HZ	Dual-Z, or -HZ
1	+Vin	+Vin	N.P.	N.P.	N.P.	N.P.
2	N.C.	-Vout	-Vin	-Vin	-Vin	-Vin
3	N.C.	Common	-Vin	-Vin	-Vin	-Vin
9	N.P.	N.P.	N.P.	Common	N.P.	Common
10	-Vout	Common	N.P.	N.P.	N.P.	N.P.
11	+Vout	+Vout	N.C.	-Vout	N.C.	-Vout
12	-Vin	-Vin	N.P.	N.P.	N.P.	N.P.
13	-Vin	-Vin	N.P.	N.P.	N.P.	N.P.
14	+Vout	+Vout	+Vout	+Vout	+Vout	+Vout
15	-Vout	Common	N.P.	N.P.	N.P.	N.P.
16	N.P.	N.P.	-Vout	Common	-Vout	Common
22	N.C.	Common	+Vin	+Vin	+Vin	+Vout
23	N.C.	-Vout	+Vin	+Vin	+Vin	+Vout
24	+Vin	+Vin	N.P.	N.P.	N.P.	N.P.

N.C. - No Connection **N.P.** - No Pin

Input Filter

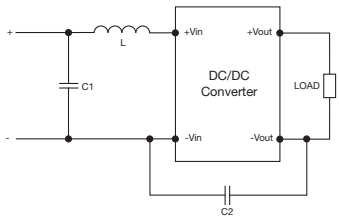

Model	C1	L	C2
JCB0305	220 µF/100 V	12 µH	
JCB0312	220 µF/100 V	12 µH	
JCB0324	220 µF/100 V	12 µH	470 pF/2 KV/ MLCC*
JCB0348	220 µF/100 V	12 µH	

*or higher for -H

Notes

1. All dimensions are in inches (mm)
2. Weight: 0.04 lbs (20 g) approx.
3. Pin diameter: 0.02±0.002 (0.5±0.05)
4. Pin pitch tolerance: ±0.014 (±0.35)
5. Case tolerance: ±0.02 (±0.5)

Looking for pricing, stock, or lifecycle information?

Click below to explore more details on WIN SOURCE:

- View JCB0305D12 on WIN SOURCE
- XP Power Information

Optimize Your Supply Chain with WIN SOURCE Solutions

- Global Sourcing Solution
- Obsolete Management
- Cost Control Management
- Shortage Management
- Alternative Solution
- Excess Inventory Management