THE DATASHEET OF

CY9AFB41MBBGL-GE1

www.win-source.net 0086-755-83957316

Please note that Cypress is an Infineon Technologies Company.

The document following this cover page is marked as “Cypress” document as this is the company that originally developed the product. Please note that Infineon will continue to offer the product to new and existing customers as part of the Infineon product portfolio.

Continuity of document content

The fact that Infineon offers the following product as part of the Infineon product portfolio does not lead to any changes to this document. Future revisions will occur when appropriate, and any changes will be set out on the document history page.

Continuity of ordering part numbers

Infineon continues to support existing part numbers. Please continue to use the ordering part numbers listed in the datasheet for ordering.

CY9AB40NB Series

32-bit ARM® Cortex®-M3 FM3 Microcontroller

The CY9AB40NB Series are highly integrated 32-bit microcontrollers dedicated for embedded controllers with low-power consumption mode and competitive cost.
These series are based on the ARM Cortex-M3 Processor with on-chip Flash memory and SRAM, and have peripheral functions such as various timers, ADCs, LCDC and Communication Interfaces (USB, UART, CSIO, I^2C).
The products which are described in this data sheet are placed into TYPE6 product categories in FM3 Family Peripheral Manual.

Features

32-bit ARM Cortex-M3 Core

- Processor version: r2p1
- Up to 40 MHz Frequency Operation
- Integrated Nested Vectored Interrupt Controller (NVIC): 1 NMI (non-maskable interrupt) and 48 peripheral interrupts and 16 priority levels
- 24-bit System timer (Sys Tick): System timer for OS task management

On-chip Memories

[Flash memory]

- Dual operation Flash memory
  - Dual Operation Flash memory has the upper bank and the lower bank. So, this series could implement erase, write and read operations for each bank simultaneously.
  - Main area: Up to 256 Kbytes (Up to 240 Kbytes upper bank + 16 Kbytes lower bank)
  - Work area: 32 Kbytes (lower bank)
- Read cycle: 0 wait-cycle
- Security function for code protection

[SRAM]

This Series on-chip SRAM is composed of two independent SRAM (SRAM0, SRAM1). SRAM0 is connected to I-code bus and D-code bus of Cortex-M3 core. SRAM1 is connected to System bus.

- SRAM0: Up to 16 Kbytes
- SRAM1: Up to 16 Kbytes

External Bus Interface*

- Supports SRAM, NOR Flash memory device
- Up to 8 chip selects
- 8-/16-bit Data width
- Up to 25-bit Address bit
- Maximum area size : Up to 256 Mbytes
- Supports Address/Data multiplex
- Supports external RDY function

*: CY9AFB41LB, FB42LB and FB44LB do not support External Bus Interface.

USB Interface

The USB interface is composed of Device and Host. PLL for USB is built-in, USB clock can be generated by multiplication of Main clock.

[USB device]

- USB2.0 Full-Speed supported
- Max 6 EndPoint supported
  - EndPoint 0 is control transfer
  - EndPoint 1, 2 can select Bulk-transfer, Interrupt-transfer or Isochronous-transfer
  - EndPoint 3 to 5 can select Bulk-transfer or Interrupt-transfer
  - EndPoint 1 to 5 is comprised of Double Buffers.
  - The size of each endpoint is according to the follows.
    - Endpoint 0, 2 to 5: 64 bytes
    - Endpoint 1: 256 bytes

[USB host]

- USB2.0 Full/Low-speed supported
- Bulk-transfer, interrupt-transfer and Isochronous-transfer support
- USB Device connected/disconnected automatic detection
- Automatic processing of the IN/OUT token handshake packet
- Max 256-byte packet-length supported
- Wake-up function supported

LCD Controller (LCDC)

- Up to 40 SEG × 8 COM
- 8 COM or 4 COM mode can be selected.
- Built-in internal dividing resistor
- LCD drive power supply (bias) pin (VV4 to VV0)
- With blinking function

Multi-function Serial Interface (Max 8channels)

- 4 channels with 16steps×9-bit FIFO (ch.4 to ch.7), 4 channels without FIFO (ch.0 to ch.3)
- Operation mode is selectable from the following for each channel.
  - UART
  - CSIO
  - I^2C

[UART]

- Full-duplex double buffer
- Selection with or without parity supported
- Built-in dedicated baud rate generator
- External clock available as a serial clock
- Hardware Flow control* : Automatically control the transmission by CTS/RTS (only ch.4)
- Various error detection functions available (parity errors, framing errors, and overrun errors)

*: CY9AFB41LB, FB42LB and FB44LB do not support Hardware Flow control.

[CSIO]

- Full-duplex double buffer
- Built-in dedicated baud rate generator
- Overrun error detection function available

[I^2C]

Standard-mode (Max 100 kbps) / Fast-mode (Max 400 kbps) supported

DMA Controller (8 channels)

The DMA Controller has an independent bus from the CPU, so CPU and DMA Controller can process simultaneously.

- 8 independently configured and operated channels
- Transfer can be started by software or request from the built-in peripherals
- Transfer address area: 32-bit (4 Gbytes)
- Transfer mode: Block transfer/Burst transfer/Demand transfer
- Transfer data type: byte/half-word/word
- Transfer block count: 1 to 16
- Number of transfers: 1 to 65536

A/D Converter (Max 24 channels)

[12-bit A/D Converter]

- Successive Approximation type
- Built-in 2 units
- Conversion time: 2.0 µs @ 2.7 V to 3.6 V
- Priority conversion available (priority at 2 levels)
- Scanning conversion mode
- Built-in FIFO for conversion data storage (for SCAN conversion: 16 steps, for Priority conversion: 4 steps)

Base Timer (Max 8 channels)

Operation mode is selectable from the following for each channel.

- 16-bit PWM timer
- 16-bit PPG timer
- 16-/32-bit reload timer
- 16-/32-bit PWC timer

General-Purpose I/O Port

This series can use its pins as general-purpose I/O ports when they are not used for external bus or peripherals. Moreover, the port relocate function is built in. It can set which I/O port the peripheral function can be allocated to.

- Capable of pull-up control per pin
- Capable of reading pin level directly
- Built-in the port relocate function
- Up to 83 fast general-purpose I/O Ports@100 pin Package
- Some ports are 5 V tolerant.

See Pin Assignment to confirm the corresponding pins.

Dual Timer (32-/16-bit Down Counter)

The Dual Timer consists of two programmable 32-/16-bit down counters.
Operation mode is selectable from the following for each channel.

- Free-running
- Periodic (=Reload)
- One-shot

HDMI-CEC/Remote Control Receiver (Up to 2 channels)

[HDMI-CEC transmitter]

- Header block automatic transmission by judging Signal free
- Generating status interrupt by detecting Arbitration lost
- Generating START, EOM, ACK automatically to output CEC transmission by setting 1 byte data
- Generating transmission status interrupt when transmitting 1 block (1 byte data and EOM/ACK)

[HDMI-CEC receiver]

- Automatic ACK reply function available
- Line error detection function available

[Remote control receiver]

- 4 bytes reception buffer
- Repeat code detection function available

Real-time clock (RTC)

The Real-time clock can count year/Month/Day/Hour/Minute/Second/A day of the week from 00 to 99.

- The interrupt function with specifying date and time (Year/Month/Day/Hour/Minute) is available. This function is also available by specifying only Year, Month, Day, Hour or Minute.
- Timer interrupt function after set time or each set time.
- Capable of rewriting the time with continuing the time count.
- Leap year automatic count is available.

Watch Counter

- The Watch counter is used for wake up from sleep and timer mode.
- Interval timer: up to 64 s (Max) @ Sub Clock: 32.768 kHz

External Interrupt Controller Unit

- Up to 16 external interrupt input pins
- Include one non-maskable interrupt (NMI) input pin

Watchdog Timer (2 channels)

- A watchdog timer can generate interrupts or a reset when a time-out value is reached.
- This series consists of two different watchdogs, a Hardware watchdog and a Software watchdog.
- The Hardware watchdog timer is clocked by the built-in low-speed CR oscillator. Therefore, the Hardware watchdog is active in any low-power consumption modes except RTC, Stop, Deep Standby RTC, Deep Standby Stop modes.

CRC (Cyclic Redundancy Check) Accelerator

The CRC accelerator calculates the CRC which has a heavy software processing load, and achieves a reduction of the integrity check processing load for reception data and storage.

CCITT CRC16 and IEEE-802.3 CRC32 are supported.

- CCITT CRC16 Generator Polynomial: 0x1021
- IEEE-802.3 CRC32 Generator Polynomial: 0x04C11DB7

Clock and Reset

[Clocks]

- Selectable from five clock sources (2 external oscillators, 2 built-in CR oscillators, and Main PLL).
- Main Clock: 4 MHz to 48 MHz
- Sub Clock: 32.768 kHz
- Built-in high-speed CR Clock: 4 MHz
- Built-in low-speed CR Clock: 100 kHz
- Main PLL Clock

[Resets]

- Reset requests from INITX pin
- Power on reset
- Software reset
- Watchdog timers reset
- Low-voltage detection reset
- Clock Super Visor reset

Clock Super Visor (CSV)

Clocks generated by built-in CR oscillators are used to supervise abnormality of the external clocks.

- External clock failure (clock stop) is detected, reset is asserted.
- External frequency anomaly is detected, interrupt or reset is asserted.

Low-Voltage Consumption Detector (LVD)

- This Series includes 2-stage monitoring of voltage on the VCC pins. When the voltage falls below the voltage that has been set, Low-Voltage Detector generates an interrupt or reset.
- LVD1: error reporting via interrupt
- LVD2: auto-reset operation

Low-Power Consumption Mode

- Six low-power consumption modes supported.
  - Sleep
  - Timer
  - RTC
  - Stop
  - Deep Standby RTC (selectable between keeping the value of RAM and not)
  - Deep Standby Stop (selectable between keeping the value of RAM and not)

Debug

- Serial Wire JTAG Debug Port (SWJ-DP)
- Embedded Trace Macrocells (ETM).*

*: CY9AFB41LB/MB, FB42LB/MB, FB44LB/MB support only SWJ-DP.

Unique ID

Unique value of the device (41-bit) is set.

Power Supply

Wide range voltage:

VCC = 1.65 V to 3.6 V

VCC = 3.0 V to 3.6 V (when USB is used)

VCC = 2.2 V to 3.6 V (when LCDC is used)

Contents

Features **1**
1. Product Lineup **6**
2. Packages **7**
3. Pin Assignment **8**
4. List of Pin Functions **15**
4.1 List of Pin Numbers 15
4.2 List of Pin Functions 26
5. I/O Circuit Type **41**
6. Handling Precautions **48**
6.1 Precautions for Product Design 48
6.2 Precautions for Package Mounting 49
6.3 Precautions for Use Environment 51
7. Handling Devices **52**
8. Block Diagram **54**
9. Memory Size **54**
10. Memory Map **55**
11. Pin Status in Each CPU State **58**
12. List of Pin Status **59**
13. Electrical Characteristics **66**
13.1 Absolute Maximum Ratings 66
13.2 Recommended Operating Conditions 67
13.3 DC Characteristics 68
13.3.1 Current rating 68
13.3.2 Pin Characteristics 71
13.4 LCD Characteristics 72
13.5 AC Characteristics 73
13.5.1 Main Clock Input Characteristics 73
13.5.2 Sub Clock Input Characteristics 74
13.5.3 Built-in CR Oscillation Characteristics 74
13.5.4 Operating Conditions of Main and USB PLL 75
13.5.5 Reset Input Characteristics 76
13.5.6 Power-on Reset Timing 77
13.5.7 External Bus Timing 78
13.5.8 Base Timer Input Timing 85
13.5.9 CSIO/UART Timing 86
13.5.10 External Input Timing 94
13.5.11 I^2C Timing 95
13.5.12 ETM Timing 96
13.5.13 JTAG Timing 97
13.6 12-bit A/D Converter 98
13.7 USB Characteristics 101
13.8 Low-Voltage Detection Characteristics 105
13.8.1 Interrupt of Low-Voltage Detection 106
13.9 Flash Memory Write/Erase Characteristics 107
13.9.1 Write / Erase time 107
13.9.2 Write cycles and data hold time 107
13.10 Return Time from Low-Power Consumption Mode 108
13.10.1 Return Factor: Interrupt/WKUP 108
13.10.2 Return Factor: Reset 109
14. Ordering Information **111**

15. Package Dimensions 112
16. Errata 121
16.1 Part Numbers Affected 121
16.2 Qualification Status 121
16.3 Errata Summary 121
17. Major Changes 125
Document History 127
Sales, Solutions, and Legal Information 128

1. Product Lineup

Memory size

Product name		CY9AFB41LB/MB/NB	CY9AFB42LB/MB/NB	CY9AFB44LB/MB/NB
On-chip Flash memory	Main area	64 Kbytes	128 Kbytes	256 Kbytes
	Work area	32 Kbytes	32 Kbytes	32 Kbytes
On-chip SRAM	SRAM0	8 Kbytes	8 Kbytes	16 Kbytes
	SRAM1	8 Kbytes	8 Kbytes	16 Kbytes
	Total	16 Kbytes	16 Kbytes	32 Kbytes

Function

Product name		CY9AFB41LB CY9AFB42LB CY9AFB44LB	CY9AFB41MB CY9AFB42MB CY9AFB44MB	CY9AFB41NB CY9AFB42NB CY9AFB44NB
Pin count		64	80/96	100/112
CPU		Cortex-M3		
	Freq.	40 MHz		
Power supply voltage range		1.65 V to 3.6 V		
USB2.0 (Device/Host)		1 ch.		
DMAC		8 ch.		
External Bus Interface		-	Addr: 21-bit (Max) R/W Data: 8-bit (Max) CS: 4 (Max) Support: SRAM, NOR Flash memory	Addr: 25-bit (Max) R/W Data: 8-/16-bit (Max) CS: 8 (Max) Support: SRAM, NOR Flash memory
LCD Controller		20 SEG × 8 COM (Max)	33 SEG × 8 COM (Max)	40 SEG × 8 COM (Max)
MF Serial Interface (UART/CSIO/I^{2}C)		8 ch. (Max) ch.4 to ch.7: FIFO (16 steps × 9-bit) ch.0 to ch.3: No FIFO		
Base Timer (PWC/Reload timer/PWM/PPG)		8 ch. (Max)		
Dual Timer		1 unit		
HDMI-CEC/ Remote Control Receiver		2 ch. (Max)		
Real-Time Clock		1 unit		
Watch Counter		1 unit		
CRC Accelerator		Yes		
Watchdog timer		1 ch. (SW) + 1 ch. (HW)		
External Interrupts		8 pins (Max) + NMI × 1	11 pins (Max) + NMI × 1	16 pins (Max) + NMI × 1
I/O ports		51 pins (Max)	66 pins (Max)	83 pins (Max)
12-bit A/D converter		12 ch. (2 units)	17 ch. (2 units)	24 ch. (2 units)
CSV (Clock Super Visor)		Yes		
LVD (Low-Voltage Detector)		2 ch.		
Built-in CR	High-speed	4 MHz		
	Low-speed	100 kHz		
Debug Function		SWJ-DP		SWJ-DP/ETM
Unique ID		Yes		

Note:

- *All signals of the peripheral function in each product cannot be allocated by limiting the pins of package. It is necessary to use the port relocate function of the I/O port according to your function use.*
- *See Electrical Characteristics12.5 AC Characteristics 12.5.3 Built-in CR Oscillation Characteristics for accuracy of built-in CR.*

2. Packages

Package	Product name	CY9AFB41LB CY9AFB42LB CY9AFB44LB	CY9AFB41MB CY9AFB42MB CY9AFB44MB	CY9AFB41NB CY9AFB42NB CY9AFB44NB
LQFP:	LQD064 (0.5mm pitch)	❍	-	-
LQFP:	LQG064 (0.65mm pitch)	❍	-	-
QFN:	VNC064 (0.5mm pitch)	❍	-	-
LQFP:	LQH080 (0.5mm pitch)	-	❍	-
LQFP:	LQJ080 (0.65mm pitch)	-	❍	-
BGA:	FDG096 (0.5mm pitch)	-	❍	-
LQFP:	LQI100 (0.5mm pitch)	-	-	❍
QFP:	PQH100 (0.65mm pitch)	-	-	❍
BGA:	LBC112 (0.8mm pitch)	-	-	❍

❍: Supported

Note:

- *See Package Dimensions for detailed information on each package.*

3. Pin Assignment

LQI100

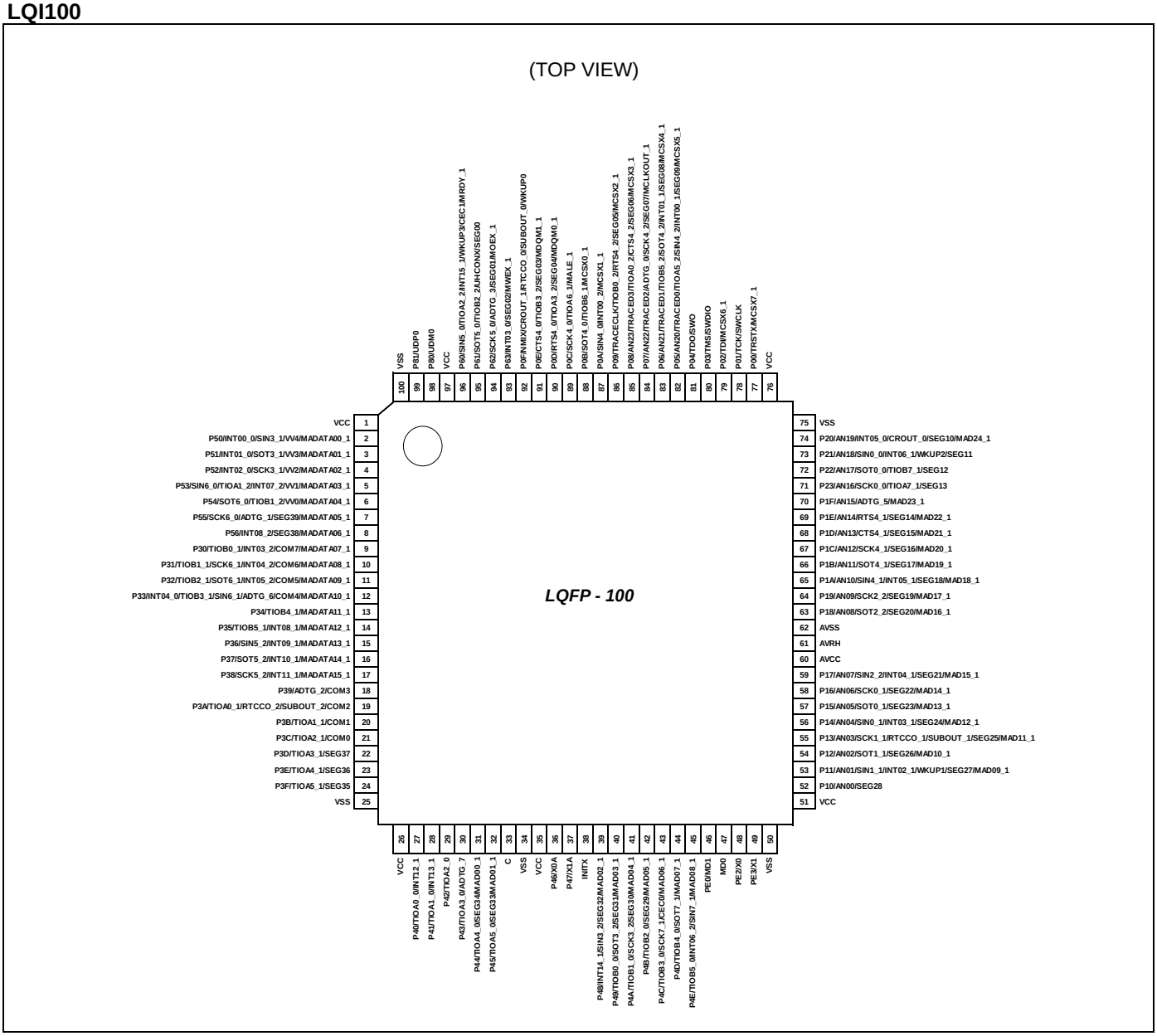

Note:

- *The number after the underscore ("_") in pin names such as XXX_1 and XXX_2 indicates the relocated port number. For these pins, there are multiple pins that provide the same function for the same channel. Use the extended port function register (EPFR) to select the pin.*

PQH100

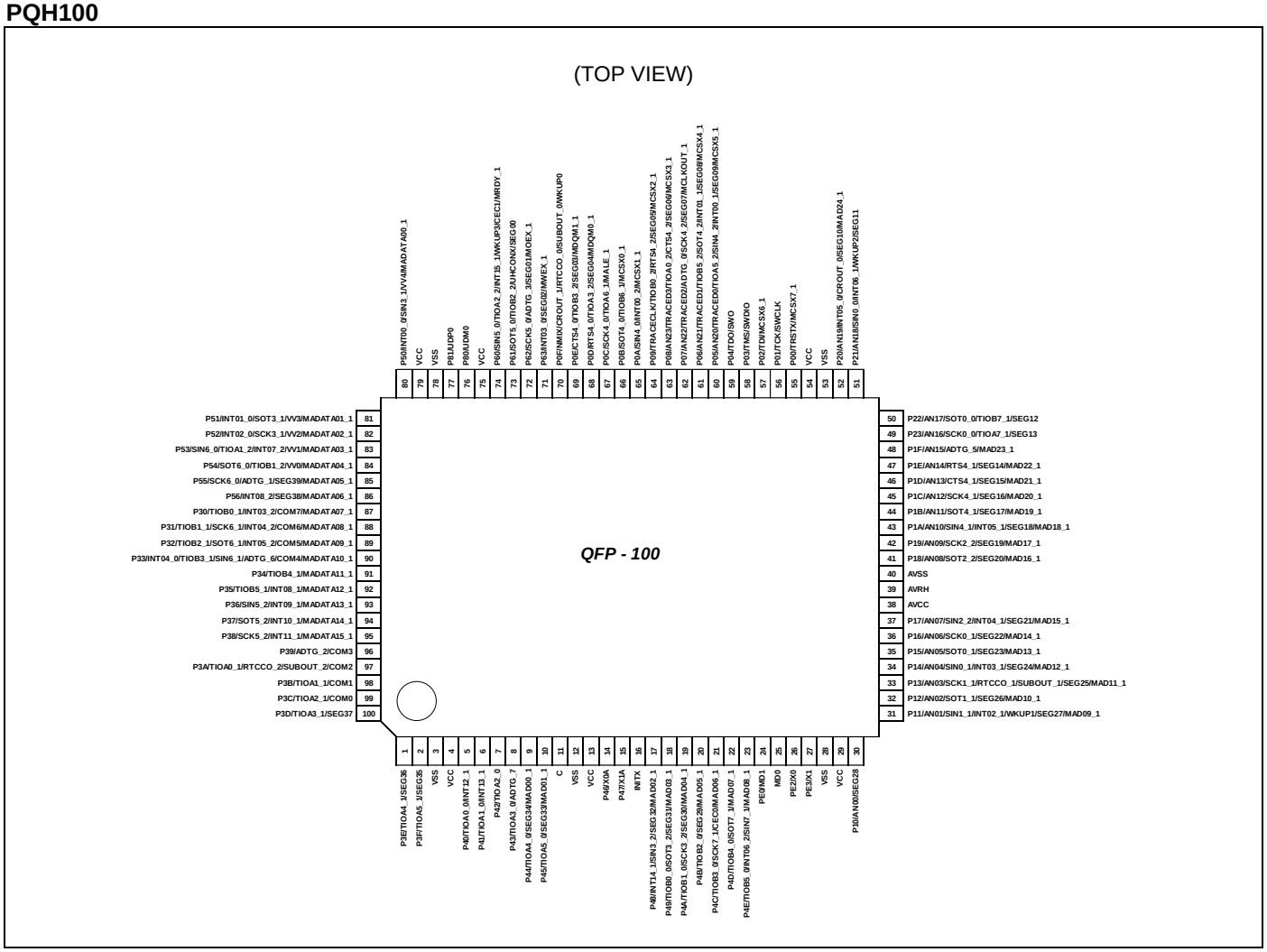

Note:

- *The number after the underscore ("_") in pin names such as XXX_1 and XXX_2 indicates the relocated port number. For these pins, there are multiple pins that provide the same function for the same channel. Use the extended port function register (EPFR) to select the pin.*

LQH080/LQJ080

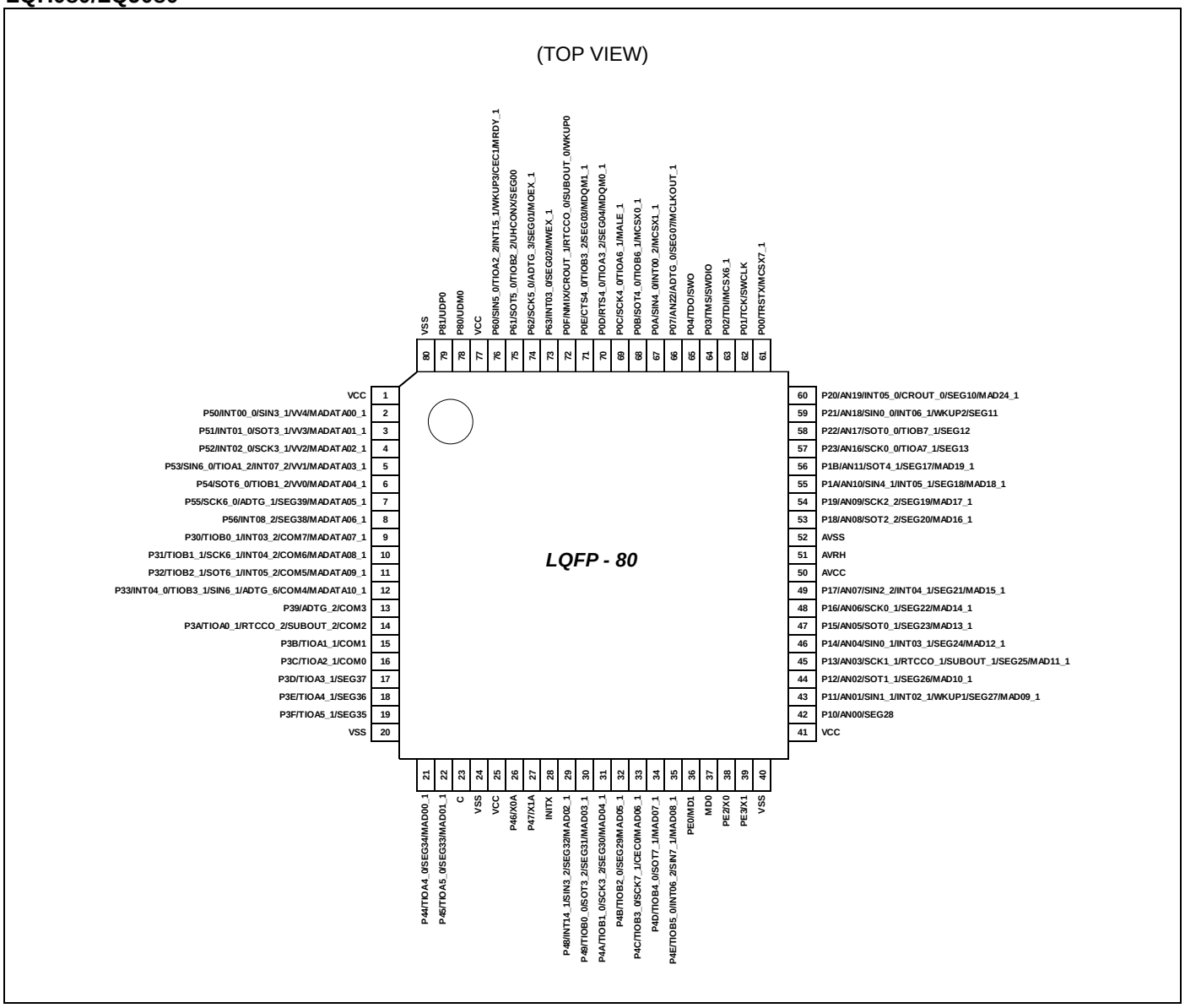

Note:

- *The number after the underscore ("_") in pin names such as XXX_1 and XXX_2 indicates the relocated port number. For these pins, there are multiple pins that provide the same function for the same channel. Use the extended port function register (EPFR) to select the pin.*

LQD064/LQG064

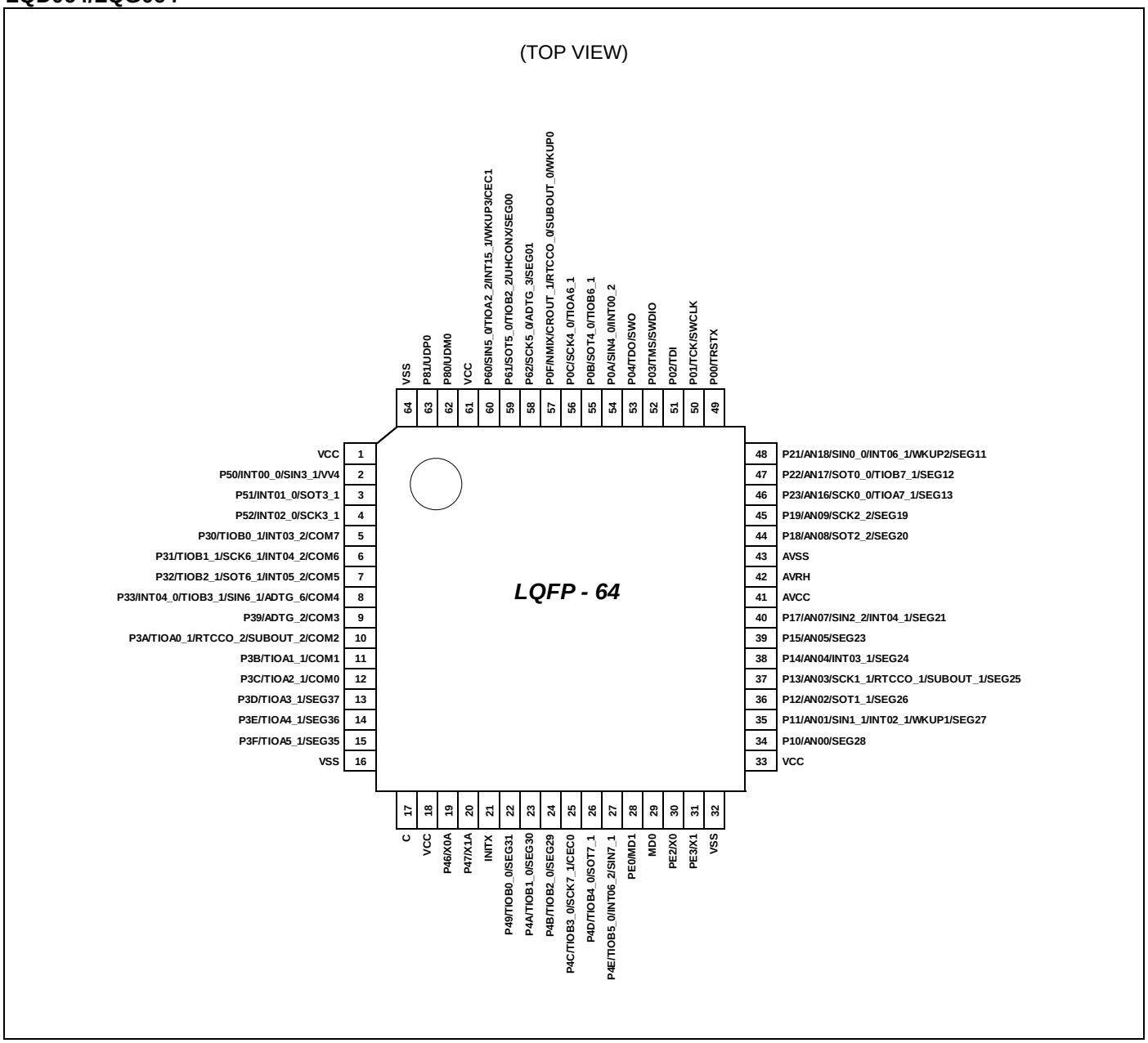

Note:

- *The number after the underscore ("_") in pin names such as XXX_1 and XXX_2 indicates the relocated port number. For these pins, there are multiple pins that provide the same function for the same channel. Use the extended port function register (EPFR) to select the pin.*

VNC064

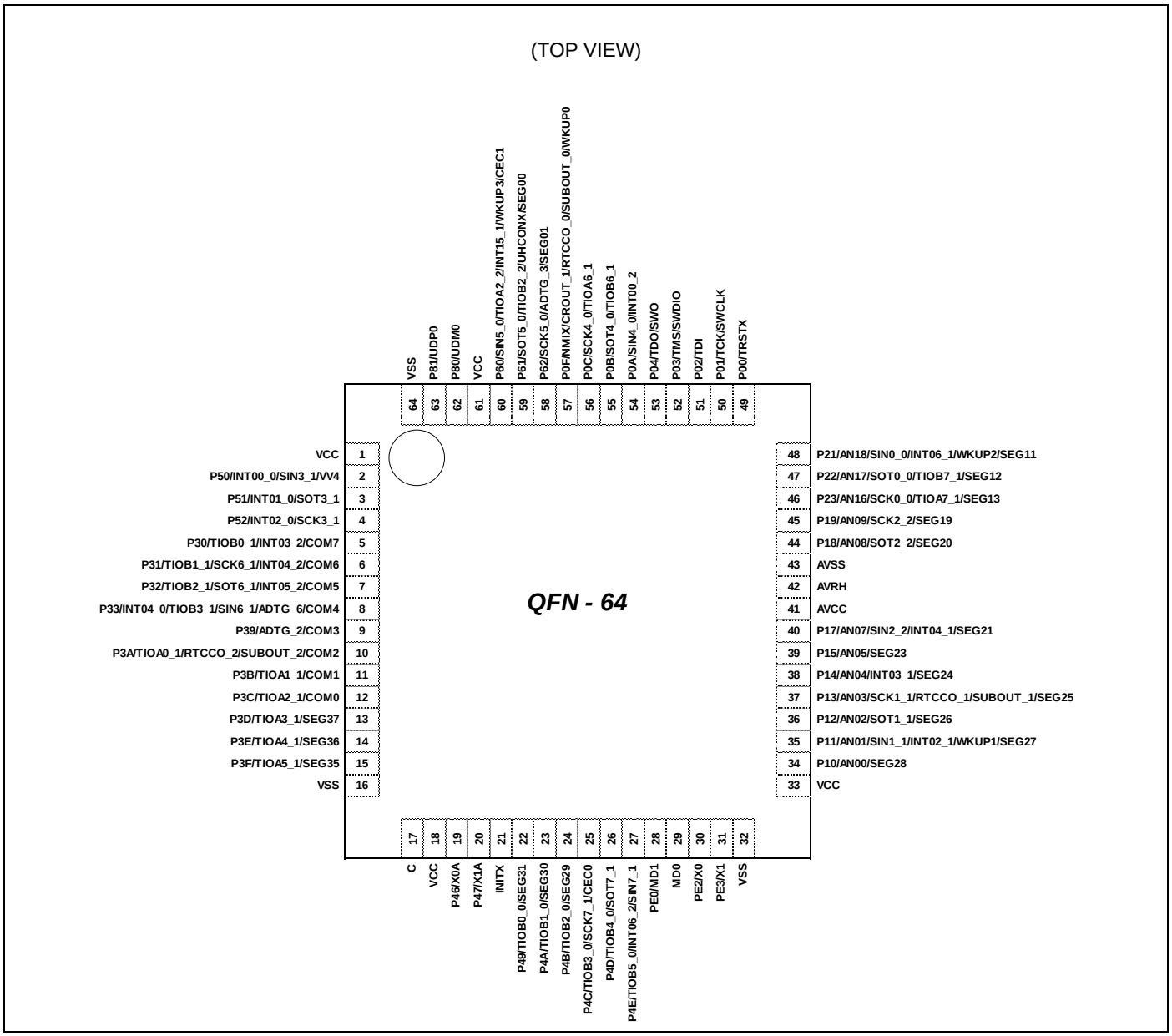

Note:

- *The number after the underscore ("_") in pin names such as XXX_1 and XXX_2 indicates the relocated port number. For these pins, there are multiple pins that provide the same function for the same channel. Use the extended port function register (EPFR) to select the pin.*

LBC112

(TOP VIEW)

	1	2	3	4	5	6	7	8	9	10	11
A	VSS	UDP0	UDM0	VCC	P0E	P0B	AN22	TMS/ SWDIO	TRSTX	VCC	VSS
B	VCC	VSS	P52	P61	P0F	P0C	AN23	TDO/ SWO	TCK/ SWCLK	VSS	TDI
C	P50	P51	VSS	P60	P62	P0D	P09	AN20	VSS	AN19	AN18
D	P53	P54	P55	VSS	P56	P63	P0A	VSS	AN21	AN16	AN15
E	P30	P31	P32	P33	Index			AN17	AN14	AN12	AN11
F	P34	P35	P36	P39				AN13	AN10	AN09	AVRH
G	P37	P38	P3A	P3D				AN08	AN07	AN06	AVSS
H	P3B	P3C	P3E	VSS	P44	P4C	AN05	VSS	AN04	AN03	AVCC
J	VCC	P3F	VSS	P40	P43	P49	P4D	AN02	VSS	AN01	AN00
K	VCC	VSS	X1A	INITX	P42	P48	P4B	P4E	MD1	VSS	VCC
L	VSS	C	X0A	VSS	P41	P45	P4A	MD0	X0	X1	VSS

Note:

– *The number after the underscore ("_") in pin names such as XXX_1 and XXX_2 indicates the relocated port number. For these pins, there are multiple pins that provide the same function for the same channel. Use the extended port function register (EPFR) to select the pin.*

FDG096

(TOP VIEW)

	1	2	3	4	5	6	7	8	9	10	11
A	VSS	UDP0	UDM0	VCC	VSS	P0F	VSS	AN22	TMS/ SWDIO	TRSTX	VSS
B	VCC	VSS	P52	P61	P63	P0D	P0C	TDO/ SWO	TCK/ SWCLK	VSS	TDI
C	P50	P51	VSS	P60	P62	P0E	P0B	P0A	VSS	AN19	AN18
D	P53	P54	P55	Index					AN17	AN16	VSS
E	P56	P30	P31						AN11	AN10	AN09
F	VSS	VSS	VSS						AN08	AN07	AVRH
G	P32	P33	P39						AN06	AN05	AVSS
H	P3A	P3B	P3C						AN04	AN03	AVCC
J	P3D	P3E	VSS	P3F	P48	P4A	P4D	AN02	VSS	AN01	AN00
K	VCC	VSS	X1A	INITX	P45	P49	P4C	P4E	MD1	VSS	VCC
L	VSS	C	X0A	VSS	P44	VSS	P4B	MD0	X0	X1	VSS

Note:

– *The number after the underscore ("_") in pin names such as XXX_1 and XXX_2 indicates the relocated port number. For these pins, there are multiple pins that provide the same function for the same channel. Use the extended port function register (EPFR) to select the pin.*

4. List of Pin Functions

4.1 List of Pin Numbers

The number after the underscore ("_") in pin names such as XXX_1 and XXX_2 indicates the relocated port number. For these pins, there are multiple pins that provide the same function for the same channel. Use the extended port function register (EPFR) to select the pin.

Pin No						Pin Name	I/O Circuit Type	Pin State Type
LQFP-100	QFP-100	BGA-112	LQFP-80	BGA-96	LQFP-64 QFN-64			
1	79	B1	1	B1	1	VCC	-	
2	80	C1	2	C1	2	P50	J	Y
						INT00_0		
						SIN3_1		
						VV4		
					-	MADATA00_1		
3	81	C2	3	C2	-	P51	J	Y
						INT01_0		
						SOT3_1 (SDA3_1)		
						VV3		
						MADATA01_1		
-	-	-	-	-	3	P51	E	L
						INT01_0		
						SOT3_1 (SDA3_1)		
4	82	B3	4	B3	-	P52	J	Y
						INT02_0		
						SCK3_1 (SCL3_1)		
						VV2		
						MADATA02_1		
-	-	-	-	-	4	P52	E	L
						INT02_0		
						SCK3_1 (SCL3_1)		
5	83	D1	5	D1	-	P53	J	Y
						SIN6_0		
						TIOA1_2		
						INT07_2		
						VV1		
						MADATA03_1		
6	84	D2	6	D2	-	P54	J	X
						SOT6_0 (SDA6_0)		
						TIOB1_2		
						VV0		
						MADATA04_1		

Pin No						Pin Name	I/O Circuit Type	Pin State Type
LQFP-100	QFP-100	BGA-112	LQFP-80	BGA-96	LQFP-64 QFN-64			
7	85	D3	7	D3	-	P55	K	U
						SCK6_0 (SCL6_0)		
						ADTG_1		
						SEG39		
						MADATA05_1		
8	86	D5	8	E1	-	P56	K	V
						INT08_2		
						SEG38		
						MADATA06_1		
9	87	E1	9	E2	5	P30	K	V
						TIOB0_1		
						INT03_2		
						COM7		
					-	MADATA07_1		
10	88	E2	10	E3	6	P31	K	V
						TIOB1_1		
						SCK6_1 (SCL6_1)		
						INT04_2		
						COM6		
					-	MADATA08_1		
11	89	E3	11	G1	7	P32	K	V
						TIOB2_1		
						SOT6_1 (SDA6_1)		
						INT05_2		
						COM5		
					-	MADATA09_1		
12	90	E4	12	G2	8	P33	K	V
						INT04_0		
						TIOB3_1		
						SIN6_1		
						ADTG_6		
						COM4		
					-	MADATA10_1		
13	91	F1	-	-	-	P34	E	K
						TIOB4_1		
						MADATA11_1		
14	92	F2	-	-	-	P35	E	L
						TIOB5_1		
						INT08_1		
						MADATA12_1		

Pin No						Pin Name	I/O Circuit Type	Pin State Type
LQFP-100	QFP-100	BGA-112	LQFP-80	BGA-96	LQFP-64 QFN-64			
15	93	F3	-	-	-	P36 SIN5_2 INT09_1 MADATA13_1	E	L
-	-	-	-	F1	-	VSS	-	
-	-	-	-	F2	-	VSS	-	
-	-	-	-	F3	-	VSS	-	
16	94	G1	-	-	-	P37 SOT5_2 (SDA5_2) INT10_1 MADATA14_1	E	L
17	95	G2	-	-	-	P38 SCK5_2 (SCL5_2) INT11_1 MADATA15_1	E	L
18	96	F4	13	G3	9	P39 ADTG_2 COM3	K	U
19	97	G3	14	H1	10	P3A TIOA0_1 RTCCO_2 SUBOUT_2 COM2	K	U
20	98	H1	15	H2	11	P3B TIOA1_1 COM1	K	U
21	99	H2	16	H3	12	P3C TIOA2_1 COM0	K	U
22	100	G4	17	J1	13	P3D TIOA3_1 SEG37	K	U
-	-	B2	-	B2	-	VSS	-	
23	1	H3	18	J2	14	P3E TIOA4_1 SEG36	K	U
24	2	J2	19	J4	15	P3F TIOA5_1 SEG35	K	U
25	3	L1	20	L1	16	VSS	-	
26	4	J1	-	-	-	VCC	-	

Pin No						Pin Name	I/O Circuit Type	Pin State Type
LQFP-100	QFP-100	BGA-112	LQFP-80	BGA-96	LQFP-64 QFN-64			
27	5	J4	-	-	-	P40 TIOA0_0 INT12_1	E	L
28	6	L5	-	-	-	P41 TIOA1_0 INT13_1	E	L
29	7	K5	-	-	-	P42 TIOA2_0	E	K
30	8	J5	-	-	-	P43 TIOA3_0 ADTG_7	E	K
31	9	H5	21	L5	-	P44 TIOA4_0 SEG34 MAD00_1	K	U
32	10	L6	22	K5	-	P45 TIOA5_0 SEG33 MAD01_1	K	U
-	-	K2	-	K2	-	VSS	-	
-	-	J3	-	J3	-	VSS	-	
-	-	H4	-	-	-	VSS	-	
-	-	-	-	L6	-	VSS	-	
33	11	L2	23	L2	17	C	-	
34	12	L4	24	L4	-	VSS	-	
35	13	K1	25	K1	18	VCC	-	
36	14	L3	26	L3	19	P46 X0A	D	F
37	15	K3	27	K3	20	P47 X1A	D	G
38	16	K4	28	K4	21	INITX	B	C
39	17	K6	29	J5	-	P48 INT14_1 SIN3_2 SEG32 MAD02_1	K	V
40	18	J6	30	K6	22	P49 TIOB0_0 SEG31	K	U
					-	SOT3_2 (SDA3_2) MAD03_1		

Pin No						Pin Name	I/O Circuit Type	Pin State Type
LQFP-100	QFP-100	BGA-112	LQFP-80	BGA-96	LQFP-64 QFN-64			
41	19	L7	31	J6	23	P4A	K	U
						TIOB1_0		
						SEG30		
					-	SCK3_2 (SCL3_2)		
						MAD04_1		
42	20	K7	32	L7	24	P4B	K	U
						TIOB2_0		
						SEG29		
					-	MAD05_1		
43	21	H6	33	K7	25	P4C	I*	S
						TIOB3_0		
						SCK7_1 (SCL7_1)		
						CEC0		
					-	MAD06_1		
44	22	J7	34	J7	26	P4D	I*	K
						TIOB4_0		
						SOT7_1 SDA7_1)		
					-	MAD07_1		
45	23	K8	35	K8	27	P4E	I*	L
						TIOB5_0		
						INT06_2		
						SIN7_1		
					-	MAD08_1		
46	24	K9	36	K9	28	MD1	C	E
						PE0		
47	25	L8	37	L8	29	MD0	G	D
48	26	L9	38	L9	30	X0	A	A
						PE2		
49	27	L10	39	L10	31	X1	A	B
						PE3		
50	28	L11	40	L11	32	VSS	-	
51	29	K11	41	K11	33	VCC	-	
52	30	J11	42	J11	34	P10	L	W
						AN00		
						SEG28		
53	31	J10	43	J10	35	P11	L	R
						AN01		
						SIN1_1		
						INT02_1		
						WKUP1		
						SEG27		
					-	MAD09_1		

Pin No						Pin Name	I/O Circuit Type	Pin State Type
LQFP-100	QFP-100	BGA-112	LQFP-80	BGA-96	LQFP-64 QFN-64			
54	32	J8	44	J8	36	P12	L	W
						AN02		
						SOT1_1.(SDA1_1)		
						SEG26		
					-	MAD10_1		
-	-	K10	-	K10	-	VSS	-	
-	-	J9	-	J9	-	VSS	-	
55	33	H10	45	H10	37	P13	L	W
						AN03		
						SCK1_1 (SCL1_1)		
						RTCCO_1		
						SEG25		
						SUBOUT_1		
					-	MAD11_1		
56	34	H9	46	H9	38	P14	L	N
						AN04		
						INT03_1		
						SEG24		
					-	SIN0_1		
						MAD12_1		
57	35	H7	47	G10	39	P15	L	W
						AN05		
						SEG23		
					-	SOT0_1 (SDA0_1)		
						MAD13_1		
58	36	G10	48	G9	-	P16	L	W
						AN06		
						SCK0_1 (SCL0_1)		
						SEG22		
						MAD14_1		
59	37	G9	49	F10	40	P17	L	N
						AN07		
						SIN2_2		
						INT04_1		
						SEG21		
					-	MAD15_1		
60	38	H11	50	H11	41	AVCC	-	
61	39	F11	51	F11	42	AVRH	-	
62	40	G11	52	G11	43	AVSS	-	

Pin No						Pin Name	I/O Circuit Type	pin state type
LQFP-100	QFP-100	BGA-112	LQFP-80	BGA-96	LQFP-64 QFN-64			
63	41	G8	53	F9	44	P18	L	W
						AN08		
						SOT2_2 (SDA2_2)		
						SEG20		
					-	MAD16_1		
64	42	F10	54	E11	45	P19	L	W
						AN09		
						SCK2_2 (SCL2_2)		
						SEG19		
					-	MAD17_1		
-	-	H8	-	-	-	VSS	-	
65	43	F9	55	E10	-	P1A	L	N
						AN10		
						SIN4_1		
						INT05_1		
						SEG18		
						MAD18_1		
66	44	E11	56	E9	-	P1B	L	W
						AN11		
						SOT4_1 (SDA4_1)		
						SEG17		
						MAD19_1		
67	45	E10	-	-	-	P1C	L	W
						AN12		
						SCK4_1 (SCL4_1)		
						SEG16		
						MAD20_1		
68	46	F8	-	-	-	P1D	L	W
						AN13		
						CTS4_1		
						SEG15		
						MAD21_1		
69	47	E9	-	-	-	P1E	L	W
						AN14		
						RTS4_1		
						SEG14		
						MAD22_1		
70	48	D11	-	-	-	P1F	F	M
						AN15		
						ADTG_5		
						MAD23_1		

Pin No						Pin Name	I/O Circuit Type	Pin State Type
LQFP-100	QFP-100	BGA-112	LQFP-80	BGA-96	LQFP-64 QFN-64			
-	-	B10	-	B10	-	VSS	-	
-	-	C9	-	C9	-	VSS	-	
-	-	-	-	D11	-	VSS	-	
71	49	D10	57	D10	46	P23	L	W
						AN16		
						SCK0_0 (SCL0_0)		
						TIOA7_1		
						SEG13		
72	50	E8	58	D9	47	P22	L	W
						AN17		
						SOT0_0 (SDA0_0)		
						TIOB7_1		
						SEG12		
73	51	C11	59	C11	48	P21	L	R
						AN18		
						SIN0_0		
						INT06_1		
						WKUP2		
						SEG11		
74	52	C10	60	C10	-	P20	L	N
						AN19		
						INT05_0		
						CROUT_0		
						SEG10		
						MAD24_1		
75	53	A11	-	A11	-	VSS	-	
76	54	A10	-	-	-	VCC	-	
77	55	A9	61	A10	49	P00	E	J
						TRSTX		
					-	MCSX7_1		
78	56	B9	62	B9	50	P01	E	J
						TCK		
						SWCLK		
79	57	B11	63	B11	51	P02	E	J
						TDI		
					-	MCSX6_1		
80	58	A8	64	A9	52	P03	E	J
						TMS		
						SWDIO		
81	59	B8	65	B8	53	P04	E	J
						TDO		
						SWO		

Pin No						Pin Name	I/O Circuit Type	Pin State Type
LQFP-100	QFP-100	BGA-112	LQFP-80	BGA-96	LQFP-64 QFN-64			
82	60	C8	-	-	-	P05	L	Q
						AN20		
						TRACED0		
						TIOA5_2		
						SIN4_2		
						INT00_1		
						SEG09		
						MCSX5_1		
-	-	D8	-	-	-	VSS	-	
83	61	D9	-	-	-	P06	L	Q
						AN21		
						TRACED1		
						TIOB5_2		
						SOT4_2 (SDA4_2)		
						INT01_1		
						SEG08		
						MCSX4_1		
84	62	A7	66	A8	-	P07	L	P
						AN22		
						ADTG_0		
						SEG07		
						MCLKOUT_1		
			-	-		TRACED2		
						SCK4_2 (SCL4_2)		
-	-	-	-	A7	-	VSS	-	
85	63	B7	-	-	-	P08	L	P
						AN23		
						TRACED3		
						TIOA0_2		
						CTS4_2		
						SEG06		
						MCSX3_1		
86	64	C7	-	-	-	P09	K	O
						TRACECLK		
						TIOB0_2		
						RTS4_2		
						SEG05		
						MCSX2_1		
87	65	D7	67	C8	54	P0A	I*	L
						SIN4_0		
						INT00_2		
					-	MCSX1_1		

Pin No						Pin Name	I/O Circuit Type	Pin State Type
LQFP-100	QFP-100	BGA-112	LQFP-80	BGA-96	LQFP-64 QFN-64			
88	66	A6	68	C7	55	P0B	I*	K
						SOT4_0 (SDA4_0)		
						TIOB6_1		
					-	MCSX0_1		
89	67	B6	69	B7	56	P0C	I*	K
						SCK4_0 (SCL4_0)		
						TIOA6_1		
					-	MALE_1		
-	-	D4	-	-	-	VSS	-	
-	-	C3	-	C3	-	VSS	-	
90	68	C6	70	B6	-	P0D	K	U
						RTS4_0		
						TIOA3_2		
						SEG04		
						MDQM0_1		
91	69	A5	71	C6	-	P0E	K	U
						CTS4_0		
						TIOB3_2		
						SEG03		
						MDQM1_1		
-	-	-	-	A5	-	VSS	-	
92	70	B5	72	A6	57	P0F	E	I
						NMIX		
						CROUT_1		
						RTCCO_0		
						SUBOUT_0		
						WKUP0		
93	71	D6	73	B5	-	P63	K	V
						INT03_0		
						SEG02		
						MWEX_1		
94	72	C5	74	C5	58	P62	K	U
						SCK5_0 (SCL5_0)		
						ADTG_3		
						SEG01		
					-	MOEX_1		
95	73	B4	75	B4	59	P61	K	U
						SOT5_0 (SDA5_0)		
						TIOB2_2		
						UHCONX		
						SEG00		

Pin No						Pin Name	I/O Circuit Type	Pin State Type
LQFP-100	QFP-100	BGA-112	LQFP-80	BGA-96	LQFP-64 QFN-64			
96	74	C4	76	C4	60	P60	I*	T
						SIN5_0		
						TIOA2_2		
						INT15_1		
						WKUP3		
						CEC1		
					-	MRDY_1		
97	75	A4	77	A4	61	VCC	-	
98	76	A3	78	A3	62	P80	H	H
						UDM0		
99	77	A2	79	A2	63	P81	H	H
						UDP0		
100	78	A1	80	A1	64	VSS	-	-

: 5 V tolerant I/O

4.2 List of Pin Functions

The number after the underscore ("_") in pin names such as XXX_1 and XXX_2 indicates the relocated port number. For these pins, there are multiple pins that provide the same function for the same channel. Use the extended port function register (EPFR) to select the pin.

Pin Function	Pin Name	Function Description	Pin No					
			LQFP-100	QFP-100	BGA-112	LQFP-80	BGA-96	LQFP/ QFN-64
ADC	ADTG_0	A/D converter external trigger input pin	84	62	A7	66	A8	-
	ADTG_1		7	85	D3	7	D3	-
	ADTG_2		18	96	F4	13	G3	9
	ADTG_3		94	72	C5	74	C5	58
	ADTG_4		-	-	-	-	-	-
	ADTG_5		70	48	D11	-	-	-
	ADTG_6		12	90	E4	12	G2	8
	ADTG_7		30	8	J5	-	-	-
	ADTG_8		-	-	-	-	-	-
	AN00	A/D converter analog input pin. ANxx describes ADC ch.xx.	52	30	J11	42	J11	34
	AN01		53	31	J10	43	J10	35
	AN02		54	32	J8	44	J8	36
	AN03		55	33	H10	45	H10	37
	AN04		56	34	H9	46	H9	38
	AN05		57	35	H7	47	G10	39
	AN06		58	36	G10	48	G9	-
	AN07		59	37	G9	49	F10	40
	AN08		63	41	G8	53	F9	44
	AN09		64	42	F10	54	E11	45
	AN10		65	43	F9	55	E10	-
	AN11		66	44	E11	56	E9	-
	AN12		67	45	E10	-	-	-
	AN13		68	46	F8	-	-	-
	AN14		69	47	E9	-	-	-
	AN15		70	48	D11	-	-	-
	AN16		71	49	D10	57	D10	46
	AN17		72	50	E8	58	D9	47
	AN18		73	51	C11	59	C11	48
	AN19		74	52	C10	60	C10	-
	AN20		82	60	C8	-	-	-
	AN21		83	61	D9	-	-	-
	AN22		84	62	A7	66	A8	-
	AN23		85	63	B7	-	-	-

Pin Function	Pin Name	Function Description	Pin No					
			LQFP-100	QFP-100	BGA-112	LQFP-80	BGA-96	LQFP/ QFN-64
Base Timer 0	TIOA0_0	Base timer ch.0 TIOA pin	27	5	J4	-	-	-
	TIOA0_1		19	97	G3	14	H1	10
	TIOA0_2		85	63	B7	-	-	-
	TIOB0_0	Base timer ch.0 TIOB pin	40	18	J6	30	K6	22
	TIOB0_1		9	87	E1	9	E2	5
	TIOB0_2		86	64	C7	-	-	-
Base Timer 1	TIOA1_0	Base timer ch.1 TIOA pin	28	6	L5	-	-	-
	TIOA1_1		20	98	H1	15	H2	11
	TIOA1_2		5	83	D1	5	D1	-
	TIOB1_0	Base timer ch.1 TIOB pin	41	19	L7	31	J6	23
	TIOB1_1		10	88	E2	10	E3	6
	TIOB1_2		6	84	D2	6	D2	-
Base Timer 2	TIOA2_0	Base timer ch.2 TIOA pin	29	7	K5	-	-	-
	TIOA2_1		21	99	H2	16	H3	12
	TIOA2_2		96	74	C4	76	C4	60
	TIOB2_0	Base timer ch.2 TIOB pin	42	20	K7	32	L7	24
	TIOB2_1		11	89	E3	11	G1	7
	TIOB2_2		95	73	B4	75	B4	59
Base Timer 3	TIOA3_0	Base timer ch.3 TIOA pin	30	8	J5	-	-	-
	TIOA3_1		22	100	G4	17	J1	13
	TIOA3_2		90	68	C6	70	B6	-
	TIOB3_0	Base timer ch.3 TIOB pin	43	21	H6	33	K7	25
	TIOB3_1		12	90	E4	12	G2	8
	TIOB3_2		91	69	A5	71	C6	-
Base Timer 4	TIOA4_0	Base timer ch.4 TIOA pin	31	9	H5	21	L5	-
	TIOA4_1		23	1	H3	18	J2	14
	TIOA4_2		-	-	-	-	-	-
	TIOB4_0	Base timer ch.4 TIOB pin	44	22	J7	34	J7	26
	TIOB4_1		13	91	F1	-	-	-
	TIOB4_2		-	-	-	-	-	-
Base Timer 5	TIOA5_0	Base timer ch.5 TIOA pin	32	10	L6	22	K5	-
	TIOA5_1		24	2	J2	19	J4	15
	TIOA5_2		82	60	C8	-	-	-
	TIOB5_0	Base timer ch.5 TIOB pin	45	23	K8	35	K8	27
	TIOB5_1		14	92	F2	-	-	-
	TIOB5_2		83	61	D9	-	-	-
Base Timer 6	TIOA6_1	Base timer ch.6 TIOA pin	89	67	B6	69	B7	56
	TIOB6_1	Base timer ch.6 TIOB pin	88	66	A6	68	C7	55
Base Timer 7	TIOA7_0	Base timer ch.7 TIOA pin	-	-	-	-	-	-
	TIOA7_1		71	49	D10	57	D10	46
	TIOA7_2		-	-	-	-	-	-
	TIOB7_0	Base timer ch.7 TIOB pin	-	-	-	-	-	-
	TIOB7_1		72	50	E8	58	D9	47
	TIOB7_2		-	-	-	-	-	-

Pin Function	Pin Name	Function Description	Pin No					
			LQFP-100	QFP-100	BGA-112	LQFP-80	BGA-96	LQFP/ QFN-64
Debugger	SWCLK	Serial wire debug interface clock input pin	78	56	B9	62	B9	50
	SWDIO	Serial wire debug interface data input / output pin	80	58	A8	64	A9	52
	SWO	Serial wire viewer output pin	81	59	B8	65	B8	53
	TCK	JTAG test clock input pin	78	56	B9	62	B9	50
	TDI	JTAG test data input pin	79	57	B11	63	B11	51
	TDO	JTAG debug data output pin	81	59	B8	65	B8	53
	TMS	JTAG test mode state input/output pin	80	58	A8	64	A9	52
	TRACECLK	Trace CLK output pin of ETM	86	64	C7	-	-	-
	TRACED0	Trace data output pins of ETM	82	60	C8	-	-	-
	TRACED1		83	61	D9	-	-	-
	TRACED2		84	62	A7	-	-	-
	TRACED3		85	63	B7	-	-	-
	TRSTX	JTAG test reset Input pin	77	55	A9	61	A10	49
External Bus	MAD00_1	External bus interface address bus	31	9	H5	21	L5	-
	MAD01_1		32	10	L6	22	K5	-
	MAD02_1		39	17	K6	29	J5	-
	MAD03_1		40	18	J6	30	K6	-
	MAD04_1		41	19	L7	31	J6	-
	MAD05_1		42	20	K7	32	L7	-
	MAD06_1		43	21	H6	33	K7	-
	MAD07_1		44	22	J7	34	J7	-
	MAD08_1		45	23	K8	35	K8	-
	MAD09_1		53	31	J10	43	J10	-
	MAD10_1		54	32	J8	44	J8	-
	MAD11_1		55	33	H10	45	H10	-
	MAD12_1		56	34	H9	46	H9	-
	MAD13_1		57	35	H7	47	G10	-
	MAD14_1		58	36	G10	48	G9	-
	MAD15_1		59	37	G9	49	F10	-
	MAD16_1		63	41	G8	53	F9	-
	MAD17_1		64	42	F10	54	E11	-
	MAD18_1		65	43	F9	55	E10	-
	MAD19_1		66	44	E11	56	E9	-
	MAD20_1		67	45	E10	-	-	-
	MAD21_1		68	46	F8	-	-	-
	MAD22_1		69	47	E9	-	-	-
	MAD23_1		70	48	D11	-	-	-
	MAD24_1		74	52	C10	60	C10	-

Pin Function	Pin Name	Function Description	Pin No					
			LQFP-100	QFP-100	BGA-112	LQFP-80	BGA-96	LQFP/ QFN-64
External Bus	MCSX0_1	External bus interface chip select output pin	88	66	A6	68	C7	-
	MCSX1_1		87	65	D7	67	C8	-
	MCSX2_1		86	64	C7	-	-	-
	MCSX3_1		85	63	B7	-	-	-
	MCSX4_1		83	61	D9	-	-	-
	MCSX5_1		82	60	C8	-	-	-
	MCSX6_1		79	57	B11	63	B11	-
	MCSX7_1		77	55	A9	61	A10	-
	MDQM0_1	External bus interface byte mask signal output pin	90	68	C6	70	B6	-
	MDQM1_1		91	69	A5	71	C6	-
	MOEX_1	External bus interface read enable signal for SRAM	94	72	C5	74	C5	-
	MWEX_1	External bus interface write enable signal for SRAM	93	71	D6	73	B5	-
	MADATA00_1	External bus interface data bus	2	80	C1	2	C1	-
	MADATA01_1		3	81	C2	3	C2	-
	MADATA02_1		4	82	B3	4	B3	-
	MADATA03_1		5	83	D1	5	D1	-
	MADATA04_1		6	84	D2	6	D2	-
	MADATA05_1		7	85	D3	7	D3	-
	MADATA06_1		8	86	D5	8	E1	-
	MADATA07_1		9	87	E1	9	E2	-
	MADATA08_1		10	88	E2	10	E3	-
	MADATA09_1		11	89	E3	11	G1	-
	MADATA10_1		12	90	E4	12	G2	-
	MADATA11_1		13	91	F1	-	-	-
	MADATA12_1		14	92	F2	-	-	-
	MADATA13_1		15	93	F3	-	-	-
	MADATA14_1		16	94	G1	-	-	-
	MADATA15_1		17	95	G2	-	-	-
	MALE_1	Address Latch enable signal for multiplex	89	67	B6	69	B7	-
	MRDY_1	External bus RDY input signal	96	74	C4	76	C4	-
	MCLKOUT_1	External bus clock output pin	84	62	A7	66	A8	-

Pin Function	Pin Name	Function Description	Pin No					
			LQFP-100	QFP-100	BGA-112	LQFP-80	BGA-96	LQFP/ QFN-64
External Interrupt	INT00_0	External interrupt request 00 input pin	2	80	C1	2	C1	2
	INT00_1		82	60	C8	-	-	-
	INT00_2		87	65	D7	67	C8	54
	INT01_0	External interrupt request 01 input pin	3	81	C2	3	C2	3
	INT01_1		83	61	D9	-	-	-
	INT02_0	External interrupt request 02 input pin	4	82	B3	4	B3	4
	INT02_1		53	31	J10	43	J10	35
	INT03_0	External interrupt request 03 input pin	93	71	D6	73	B5	-
	INT03_1		56	34	H9	46	H9	38
	INT03_2		9	87	E1	9	E2	5
	INT04_0	External interrupt request 04 input pin	12	90	E4	12	G2	8
	INT04_1		59	37	G9	49	F10	40
	INT04_2		10	88	E2	10	E3	6
	INT05_0	External interrupt request 05 input pin	74	52	C10	60	C10	-
	INT05_1		65	43	F9	55	E10	-
	INT05_2		11	89	E3	11	G1	7
	INT06_1	External interrupt request 06 input pin	73	51	C11	59	C11	48
	INT06_2		45	23	K8	35	K8	27
	INT07_2	External interrupt request 07 input pin	5	83	D1	5	D1	-
	INT08_1	External interrupt request 08 input pin	14	92	F2	-	-	-
	INT08_2		8	86	D5	8	E1	-
	INT09_1	External interrupt request 09 input pin	15	93	F3	-	-	-
	INT10_1	External interrupt request 10 input pin	16	94	G1	-	-	-
	INT11_1	External interrupt request 11 input pin	17	95	G2	-	-	-
	INT12_1	External interrupt request 12 input pin	27	5	J4	-	-	-
	INT13_1	External interrupt request 13 input pin	28	6	L5	-	-	-
	INT14_1	External interrupt request 14 input pin	39	17	K6	29	J5	-
	INT15_1	External interrupt request 15 input pin	96	74	C4	76	C4	60
	NMIX	Non-Maskable Interrupt input pin	92	70	B5	72	A6	57

Pin Function	Pin Name	Function Description	Pin No					
			LQFP-100	QFP-100	BGA-112	LQFP-80	BGA-96	LQFP/ QFN-64
GPIO	P00	General-purpose I/O port 0	77	55	A9	61	A10	49
	P01		78	56	B9	62	B9	50
	P02		79	57	B11	63	B11	51
	P03		80	58	A8	64	A9	52
	P04		81	59	B8	65	B8	53
	P05		82	60	C8	-	-	-
	P06		83	61	D9	-	-	-
	P07		84	62	A7	66	A8	-
	P08		85	63	B7	-	-	-
	P09		86	64	C7	-	-	-
	P0A		87	65	D7	67	C8	54
	P0B		88	66	A6	68	C7	55
	P0C		89	67	B6	69	B7	56
	P0D		90	68	C6	70	B6	-
	P0E		91	69	A5	71	C6	-
	P0F		92	70	B5	72	A6	57
	P10	General-purpose I/O port 1	52	30	J11	42	J11	34
	P11		53	31	J10	43	J10	35
	P12		54	32	J8	44	J8	36
	P13		55	33	H10	45	H10	37
	P14		56	34	H9	46	H9	38
	P15		57	35	H7	47	G10	39
	P16		58	36	G10	48	G9	-
	P17		59	37	G9	49	F10	40
	P18		63	41	G8	53	F9	44
	P19		64	42	F10	54	E11	45
	P1A		65	43	F9	55	E10	-
	P1B		66	44	E11	56	E9	-
	P1C		67	45	E10	-	-	-
	P1D		68	46	F8	-	-	-
	P1E		69	47	E9	-	-	-
	P1F		70	48	D11	-	-	-
	P20	General-purpose I/O port 2	74	52	C10	60	C10	-
	P21		73	51	C11	59	C11	48
	P22		72	50	E8	58	D9	47
	P23		71	49	D10	57	D10	46

Pin Function	Pin Name	Function Description	Pin No					
			LQFP-100	QFP-100	BGA-112	LQFP-80	BGA-96	LQFP/ QFN-64
GPIO	P30	General-purpose I/O port 3	9	87	E1	9	E2	5
	P31		10	88	E2	10	E3	6
	P32		11	89	E3	11	G1	7
	P33		12	90	E4	12	G2	8
	P34		13	91	F1	-	-	-
	P35		14	92	F2	-	-	-
	P36		15	93	F3	-	-	-
	P37		16	94	G1	-	-	-
	P38		17	95	G2	-	-	-
	P39		18	96	F4	13	G3	9
	P3A		19	97	G3	14	H1	10
	P3B		20	98	H1	15	H2	11
	P3C		21	99	H2	16	H3	12
	P3D		22	100	G4	17	J1	13
	P3E		23	1	H3	18	J2	14
	P3F		24	2	J2	19	J4	15
	P40	General-purpose I/O port 4	27	5	J4	-	-	-
	P41		28	6	L5	-	-	-
	P42		29	7	K5	-	-	-
	P43		30	8	J5	-	-	-
	P44		31	9	H5	21	L5	-
	P45		32	10	L6	22	K5	-
	P46		36	14	L3	26	L3	19
	P47		37	15	K3	27	K3	20
	P48		39	17	K6	29	J5	-
	P49		40	18	J6	30	K6	22
	P4A		41	19	L7	31	J6	23
	P4B		42	20	K7	32	L7	24
	P4C		43	21	H6	33	K7	25
	P4D		44	22	J7	34	J7	26
	P4E		45	23	K8	35	K8	27
	P50	General-purpose I/O port 5	2	80	C1	2	C1	2
	P51		3	81	C2	3	C2	3
	P52		4	82	B3	4	B3	4
	P53		5	83	D1	5	D1	-
	P54		6	84	D2	6	D2	-
	P55		7	85	D3	7	D3	-
	P56		8	86	D5	8	E1	-
	P60	General-purpose I/O port 6	96	74	C4	76	C4	60
	P61		95	73	B4	75	B4	59
	P62		94	72	C5	74	C5	58
	P63		93	71	D6	73	B5	-
	P80	General-purpose I/O port 8	98	76	A3	78	A3	62
	P81		99	77	A2	79	A2	63
	PE0	General-purpose I/O port E	46	24	K9	36	K9	28
	PE2		48	26	L9	38	L9	30
	PE3		49	27	L10	39	L10	31

Pin Function	Pin Name	Function Description	Pin No					
			LQFP-100	QFP-100	BGA-112	LQFP-80	BGA-96	LQFP/ QFN-64
Multi-function Serial0	SIN0_0	Multi-function serial interface ch.0 input pin	73	51	C11	59	C11	48
	SIN0_1		56	34	H9	46	H9	-
	SOT0_0 (SDA0_0)	Multi-function serial interface ch.0 output pin. This pin operates as SOT0 when it is used in a UART/CSIO (operation modes 0 to 2) and as SDA0 when it is used in an I^2C (operation mode 4).	72	50	E8	58	D9	47
	SOT0_1 (SDA0_1)		57	35	H7	47	G10	-
	SCK0_0 (SCL0_0)	Multi-function serial interface ch.0 clock I/O pin. This pin operates as SCK0 when it is used in a UART/CSIO (operation modes 0 to 2) and as SCL0 when it is used in an I^2C (operation mode 4).	71	49	D10	57	D10	46
	SCK0_1 (SCL0_1)		58	36	G10	48	G9	-
Multi-function Serial1	SIN1_1	Multi-function serial interface ch.1 input pin	53	31	J10	43	J10	35
	SOT1_1 (SDA1_1)	Multi-function serial interface ch.1 output pin. This pin operates as SOT1 when it is used in a UART/CSIO (operation modes 0 to 2) and as SDA1 when it is used in an I^2C (operation mode 4).	54	32	J8	44	J8	36
	SCK1_1 (SCL1_1)	Multi-function serial interface ch.1 clock I/O pin. This pin operates as SCK1 when it is used in a UART/CSIO (operation modes 0 to 2) and as SCL1 when it is used in an I^2C (operation mode 4).	55	33	H10	45	H10	37

Pin Function	Pin Name	Function Description	Pin No					
			LQFP-100	QFP-100	BGA-112	LQFP-80	BGA-96	LQFP/ QFN-64
Multi-function Serial 2	SIN2_2	Multi-function serial interface ch.2 input pin	59	37	G9	49	F10	40
	SOT2_2 (SDA2_2)	Multi-function serial interface ch.2 output pin. This pin operates as SOT2 when it is used in a UART/CSIO (operation modes 0 to 2) and as SDA2 when it is used in an I^2C (operation mode 4).	63	41	G8	53	F9	44
	SCK2_2 (SCL2_2)	Multi-function serial interface ch.2 clock I/O pin. This pin operates as SCK2 when it is used in a UART/CSIO (operation modes 0 to 2) and as SCL2 when it is used in an I^2C (operation mode 4).	64	42	F10	54	E11	45
Multi-function Serial 3	SIN3_1	Multi-function serial interface ch.3 input pin	2	80	C1	2	C1	2
	SIN3_2		39	17	K6	29	J5	-
	SOT3_1 (SDA3_1)	Multi-function serial interface ch.3 output pin. This pin operates as SOT3 when it is used in a UART/CSIO (operation modes 0 to 2) and as SDA3 when it is used in an I^2C (operation mode 4).	3	81	C2	3	C2	3
	SOT3_2 (SDA3_2)		40	18	J6	30	K6	-
	SCK3_1 (SCL3_1)	Multi-function serial interface ch.3 clock I/O pin. This pin operates as SCK3 when it is used in a UART/CSIO (operation modes 0 to 2) and as SCL3 when it is used in an I^2C (operation mode 4).	4	82	B3	4	B3	4
	SCK3_2 (SCL3_2)		41	19	L7	31	J6	-

Pin Function	Pin Name	Function Description	Pin No					
			LQFP-100	QFP-100	BGA-112	LQFP-80	BGA-96	LQFP/ QFN-64
Multi-function Serial 4	SIN4_0	Multi-function serial interface ch.4 input pin	87	65	D7	67	C8	54
	SIN4_1		65	43	F9	55	E10	-
	SIN4_2		82	60	C8	-	-	-
	SOT4_0 (SDA4_0)	Multi-function serial interface ch.4 output pin. This pin operates as SOT4 when it is used in a UART/CSIO (operation modes 0 to 2) and as SDA4 when it is used in an I²C (operation mode 4).	88	66	A6	68	C7	55
	SOT4_1 (SDA4_1)		66	44	E11	56	E9	-
	SOT4_2 (SDA4_2)		83	61	D9	-	-	-
	SCK4_0 (SCL4_0)	Multi-function serial interface ch.4 clock I/O pin. This pin operates as SCK4 when it is used in a UART/CSIO (operation modes 0 to 2) and as SCL4 when it is used in an I²C (operation mode 4).	89	67	B6	69	B7	56
	SCK4_1 (SCL4_1)		67	45	E10	-	-	-
	SCK4_2 (SCL4_2)		84	62	A7	-	-	-
	RTS4_0	Multi-function serial interface ch.4 RTS output pin	90	68	C6	70	B6	-
	RTS4_1		69	47	E9	-	-	-
	RTS4_2		86	64	C7	-	-	-
	CTS4_0	Multi-function serial interface ch.4 CTS input pin	91	69	A5	71	C6	-
	CTS4_1		68	46	F8	-	-	-
	CTS4_2		85	63	B7	-	-	-
Multi-function Serial 5	SIN5_0	Multi-function serial interface ch.5 input pin	96	74	C4	76	C4	60
	SIN5_2		15	93	F3	-	-	-
	SOT5_0 (SDA5_0)	Multi-function serial interface ch.5 output pin. This pin operates as SOT5 when it is used in a UART/CSIO (operation modes 0 to 2) and as SDA5 when it is used in an I²C (operation mode 4).	95	73	B4	75	B4	59
	SOT5_2 (SDA5_2)		16	94	G1	-	-	-
	SCK5_0 (SCL5_0)	Multi-function serial interface ch.5 clock I/O pin. This pin operates as SCK5 when it is used in a UART/CSIO (operation modes 0 to 2) and as SCL5 when it is used in an I²C (operation mode 4).	94	72	C5	74	C5	58
	SCK5_2 (SCL5_2)		17	95	G2	-	-	-

Pin Function	Pin Name	Function Description	Pin No					
			LQFP-100	QFP-100	BGA-112	LQFP-80	BGA-96	LQFP/ QFN-64
Multi-function Serial 6	SIN6_0	Multi-function serial interface ch.6 input pin	5	83	D1	5	D1	-
	SIN6_1		12	90	E4	12	G2	8
	SOT6_0 (SDA6_0)	Multi-function serial interface ch.6 output pin. This pin operates as SOT6 when it is used in a UART/CSIO (operation modes 0 to 2) and as SDA6 when it is used in an I^2C (operation mode 4).	6	84	D2	6	D2	-
	SOT6_1 (SDA6_1)		11	89	E3	11	G1	7
	SCK6_0 (SCL6_0)	Multi-function serial interface ch.6 clock I/O pin. This pin operates as SCK6 when it is used in a UART/CSIO (operation modes 0 to 2) and as SCL6 when it is used in an I^2C (operation mode 4).	7	85	D3	7	D3	-
	SCK6_1 (SCL6_1)		10	88	E2	10	E3	6
Multi-function Serial 7	SIN7_1	Multi-function serial interface ch.7 input pin	45	23	K8	35	K8	27
	SOT7_1 (SDA7_1)	Multi-function serial interface ch.7 output pin. This pin operates as SOT7 when it is used in a UART/CSIO (operation modes 0 to 2) and as SDA7 when it is used in an I^2C (operation mode 4).	44	22	J7	34	J7	26
	SCK7_1 (SCL7_1)	Multi-function serial interface ch.7 clock I/O pin. This pin operates as SCK7 when it is used in a UART/CSIO (operation modes 0 to 2) and as SCL7 when it is used in an I^2C (operation mode 4).	43	21	H6	33	K7	25

Pin Function	Pin Name	Function Description	Pin No					
			LQFP-100	QFP-100	BGA-112	LQFP-80	BGA-96	LQFP/ QFN-64
USB	UDM0	USB device/host D – pin	98	76	A3	78	A3	62
	UDP0	USB device/host D + pin	99	77	A2	79	A2	63
	UHCONX	USB external pull-up control pin	95	73	B4	75	B4	59
Real-time clock	RTCCO_0	0.5 seconds pulse output pin of Real-time clock	92	70	B5	72	A6	57
	RTCCO_1		55	33	H10	45	H10	37
	RTCCO_2		19	97	G3	14	H1	10
	SUBOUT_0	Sub clock output pin	92	70	B5	72	A6	57
	SUBOUT_1		55	33	H10	45	H10	37
	SUBOUT_2		19	97	G3	14	H1	10
Low-Power Consumption Mode	WKUP0	Deep standby mode return signal input pin 0	92	70	B5	72	A6	57
	WKUP1	Deep standby mode return signal input pin 1	53	31	J10	43	J10	35
	WKUP2	Deep standby mode return signal input pin 2	73	51	C11	59	C11	48
	WKUP3	Deep standby mode return signal input pin 3	96	74	C4	76	C4	60
HDMI-CEC/ Remote Control Reception	CEC0	HDMI-CEC/Remote Control Reception ch.0 input/output pin	43	21	H6	33	K7	25
	CEC1	HDMI-CEC/Remote Control Reception ch.1 input/output pin	96	74	C4	76	C4	60
LCDC	VV0	LCD drive power supply pin	6	84	D2	6	D2	-
	VV1		5	83	D1	5	D1	-
	VV2		4	82	B3	4	B3	-
	VV3		3	81	C2	3	C2	-
	VV4		2	80	C1	2	C1	2
	COM0	LCD common output pin	21	99	H2	16	H3	12
	COM1		20	98	H1	15	H2	11
	COM2		19	97	G3	14	H1	10
	COM3		18	96	F4	13	G3	9
	COM4		12	90	E4	12	G2	8
	COM5		11	89	E3	11	G1	7
	COM6		10	88	E2	10	E3	6
	COM7		9	87	E1	9	E2	5

Pin function	Pin name	Function description	Pin No					
			LQFP-100	QFP-100	BGA-112	LQFP-80	BGA-96	LQFP/ QFN-64
LCDC	SEG00	LCD segment output pin	95	73	B4	75	B4	59
	SEG01		94	72	C5	74	C5	58
	SEG02		93	71	D6	73	B5	-
	SEG03		91	69	A5	71	C6	-
	SEG04		90	68	C6	70	B6	-
	SEG05		86	64	C7	-	-	-
	SEG06		85	63	B7	-	-	-
	SEG07		84	62	A7	66	A8	-
	SEG08		83	61	D9	-	-	-
	SEG09		82	60	C8	-	-	-
	SEG10		74	52	C10	60	C10	-
	SEG11		73	51	C11	59	C11	48
	SEG12		72	50	E8	58	D9	47
	SEG13		71	49	D10	57	D10	46
	SEG14		69	47	E9	-	-	-
	SEG15		68	46	F8	-	-	-
	SEG16		67	45	E10	-	-	-
	SEG17		66	44	E11	56	E9	-
	SEG18		65	43	F9	55	E10	-
	SEG19		64	42	F10	54	E11	45
	SEG20		63	41	G8	53	F9	44
	SEG21		59	37	G9	49	F10	40
	SEG22		58	36	G10	48	G9	-
	SEG23		57	35	H7	47	G10	39
	SEG24		56	34	H9	46	H9	38
	SEG25		55	33	H10	45	H10	37
	SEG26		54	32	J8	44	J8	36
	SEG27		53	31	J10	43	J10	35
	SEG28		52	30	J11	42	J11	34
	SEG29		42	20	K7	32	L7	24
	SEG30		41	19	L7	31	J6	23
	SEG31		40	18	J6	30	K6	22
	SEG32		39	17	K6	29	J5	-
	SEG33		32	10	L6	22	K5	-
	SEG34		31	9	H5	21	L5	-
	SEG35		24	2	J2	19	J4	15
	SEG36		23	1	H3	18	J2	14
	SEG37		22	100	G4	17	J1	13
	SEG38		8	86	D5	8	E1	-
	SEG39		7	85	D3	7	D3	-

Pin Function	Pin Name	Function Description	Pin No					
			LQFP-100	QFP-100	BGA-112	LQFP-80	BGA-96	LQFP/ QFN-64
Reset	INITX	External Reset Input pin. A reset is valid when INITX=L.	38	16	K4	28	K4	21
Mode	MD0	Mode 0 pin. During normal operation, MD0=L must be input. During serial programming to Flash memory, MD0=H must be input.	47	25	L8	37	L8	29
	MD1	Mode 1 pin. During serial programming to Flash memory, MD1=L must be input.	46	24	K9	36	K9	28
Power	VCC	Power supply Pin	1	79	B1	1	B1	1
			26	4	J1	-	-	-
			35	13	K1	25	K1	18
			51	29	K11	41	K11	33
			76	54	A10	-	-	-
			97	75	A4	77	A4	61
GND	VSS	GND Pin	-	-	-	-	F1	-
			-	-	-	-	F2	-
			-	-	-	-	F3	-
			-	-	B2	-	B2	-
			25	3	L1	20	L1	16
			-	-	K2	-	K2	-
			-	-	J3	-	J3	-
			-	-	H4	-	-	-
			-	-	-	-	L6	-
			34	12	L4	24	L4	-
			50	28	L11	40	L11	32
			-	-	K10	-	K10	-
			-	-	J9	-	J9	-
			-	-	H8	-	-	-
			-	-	B10	-	B10	-
			-	-	C9	-	C9	-
			-	-	-	-	D11	-
			75	53	A11	-	A11	-
			-	-	D8	-	-	-
			-	-	-	-	A7	-
			-	-	D4	-	-	-
			-	-	C3	-	C3	-
			-	-	-	-	A5	-
			100	78	A1	80	A1	64

Pin Function	Pin Name	Function Description	Pin No					
			LQFP-100	QFP-100	BGA-112	LQFP-80	BGA-96	LQFP/ QFN-64
Clock	X0	Main clock (oscillation) input pin	48	26	L9	38	L9	30
	X0A	Sub clock (oscillation) input pin	36	14	L3	26	L3	19
	X1	Main clock (oscillation) I/O pin	49	27	L10	39	L10	31
	X1A	Sub clock (oscillation) I/O pin	37	15	K3	27	K3	20
	CROUT_0	Built-in high-speed CR-osc clock output port	74	52	C10	60	C10	-
	CROUT_1		92	70	B5	72	A6	57
ADC power	AVCC	A/D converter analog power supply pin	60	38	H11	50	H11	41
	AVRH	A/D converter analog reference voltage input pin	61	39	F11	51	F11	42
ADC GND	AVSS	A/D converter GND pin	62	40	G11	52	G11	43
C pin	C	Power supply stabilization capacity pin	33	11	L2	23	L2	17

Note:

- *While this device contains a Test Access Port (TAP) based on the IEEE 1149.1-2001 JTAG standard, it is not fully compliant to all requirements of that standard. This device may contain a 32-bit device ID that is the same as the 32-bit device ID in other devices with different functionality. The TAP pins may also be configurable for purposes other than access to the TAP controller.*

5. I/O Circuit Type

Type	Circuit	Remarks
A	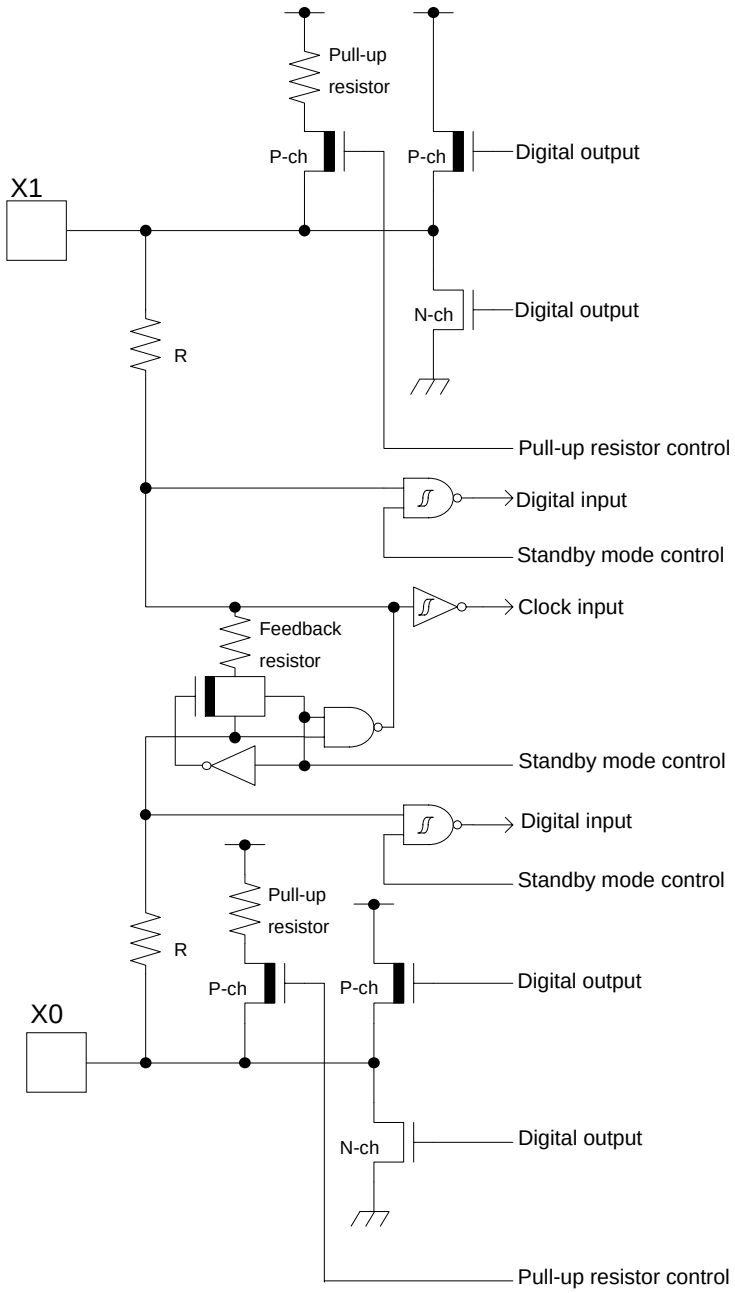	*It is possible to select the main oscillation / GPIO function* *When the main oscillation is selected.* – Oscillation feedback resistor: Approximately 1 MΩ – With Standby mode control – When the GPIO is selected. – CMOS level output. – CMOS level hysteresis input – With pull-up resistor control – With standby mode control – Pull-up resistor: Approximately 33 kΩ – I_{OH}= -4 mA, I_{OL}= 4 mA

Type	Circuit	Remarks
B	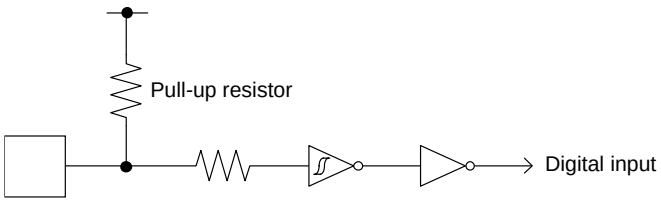	– CMOS level hysteresis input – Pull-up resistor: Approximately 33 kΩ
C	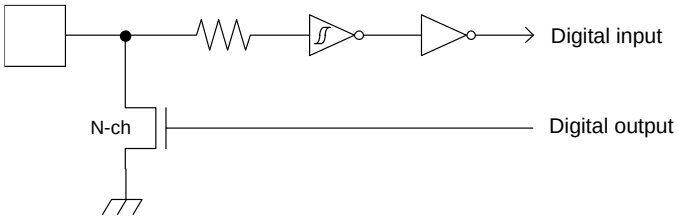	– Open drain output – CMOS level hysteresis input

Type	Circuit	Remarks
D	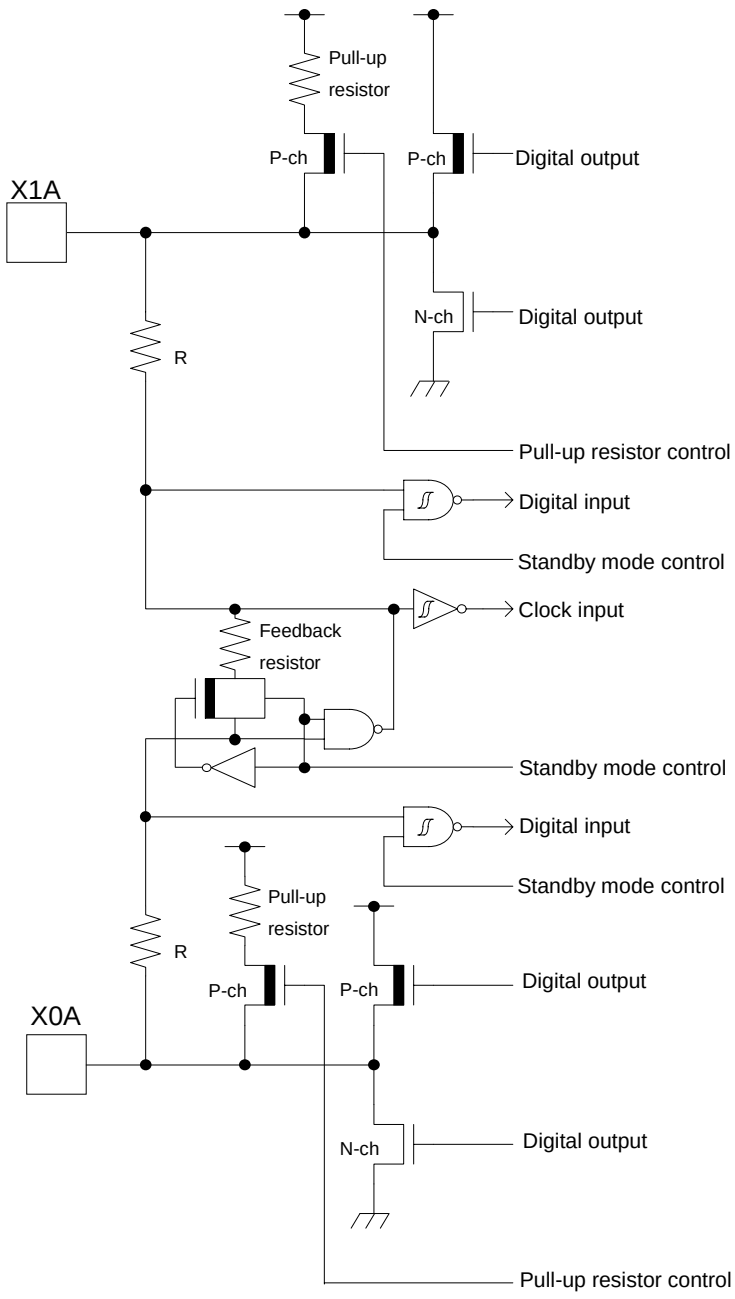	*It is possible to select the sub oscillation / GPIO function* *When the sub oscillation is selected.* – Oscillation feedback resistor: Approximately 5 MΩ – With Standby mode control *When the GPIO is selected.* – CMOS level output. – CMOS level hysteresis input – With pull-up resistor control – With standby mode control – Pull-up resistor: Approximately 33 kΩ – IOH= -4 mA, IOL= 4 mA

Type	Circuit	Remarks
E	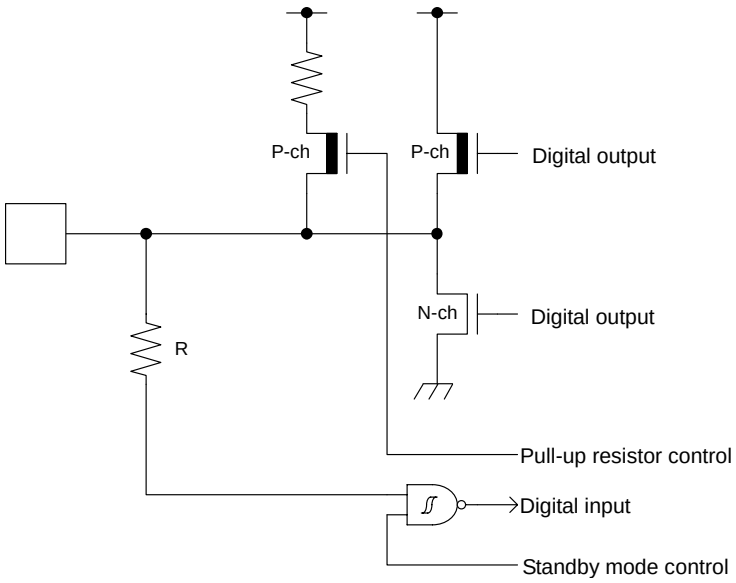	– CMOS level output – CMOS level hysteresis input – With pull-up resistor control – With standby mode control – Pull-up resistor: Approximately 33 kΩ – IOH= -4 mA, IOL= 4 mA – When this pin is used as an I2C pin, the digital output P-ch transistor is always off
F	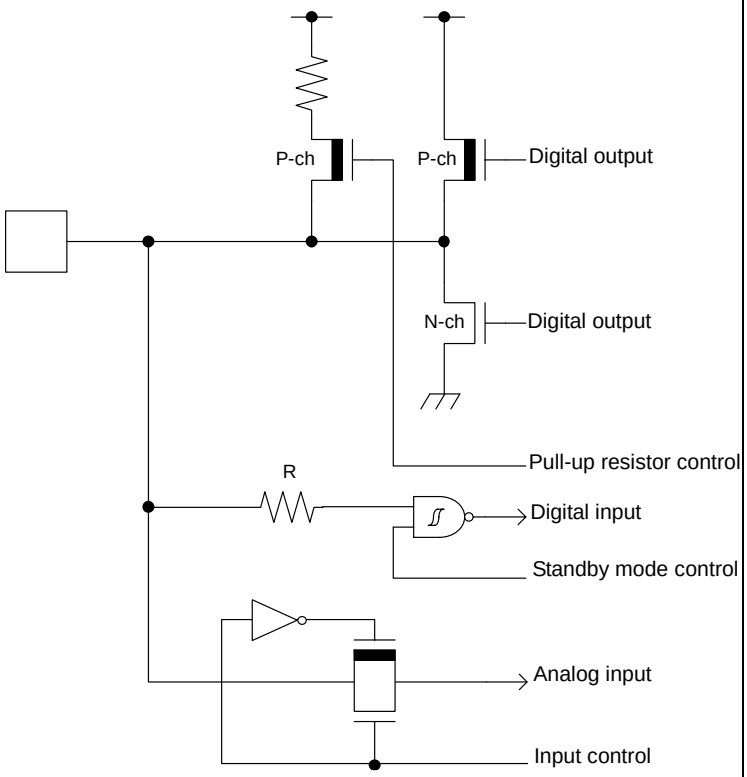	– CMOS level output – CMOS level hysteresis input – With input control – Analog input – With pull-up resistor control – With standby mode control – Pull-up resistor: Approximately 33 kΩ – IOH= -4 mA, IOL= 4 mA – When this pin is used as an I2C pin, the digital output P-ch transistor is always off

Type	Circuit	Remarks
G	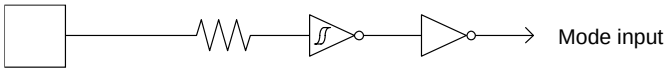	*CMOS level hysteresis input*
H	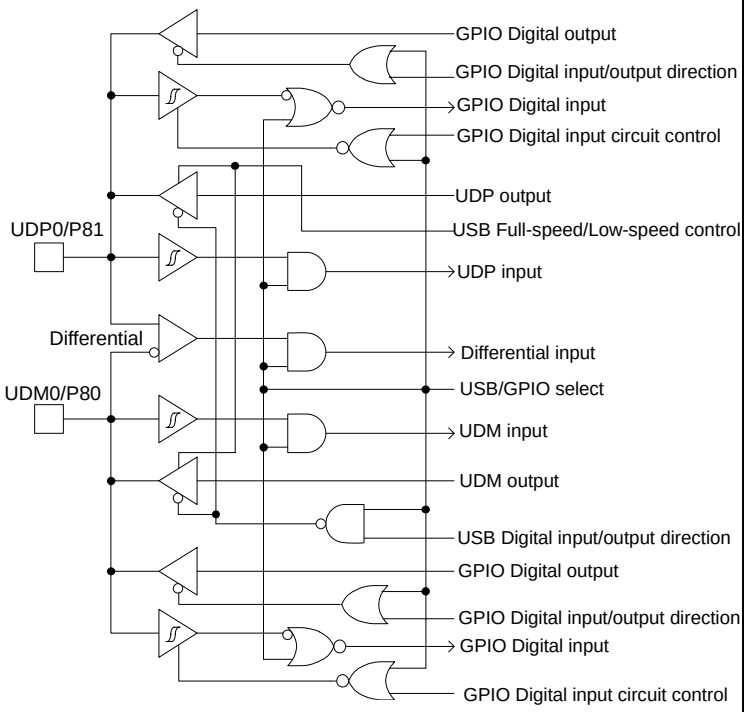	*It is possible to select the USB I/O / GPIO function.* *When the USB I/O is selected.* – Full-speed, Low-speed control When the GPIO is selected. – CMOS level output – CMOS level hysteresis input – With standby mode control
I	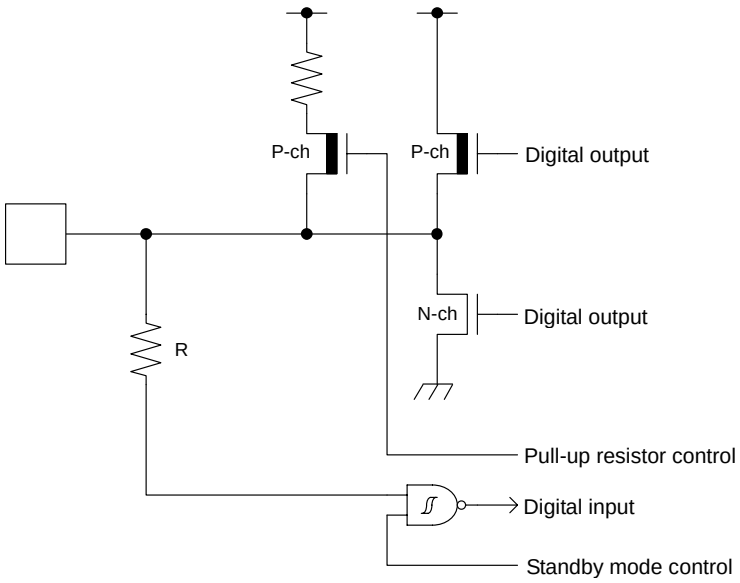	– CMOS level output – CMOS level hysteresis input – 5 V tolerant – With pull-up resistor control – With standby mode control – Pull-up resistor: Approximately 33 kΩ – IOH= -4 mA, IOL= 4 mA – Available to control PZR registers. – When this pin is used as an I2C pin, the digital output P-ch transistor is always off

Type	Circuit	Remarks
J	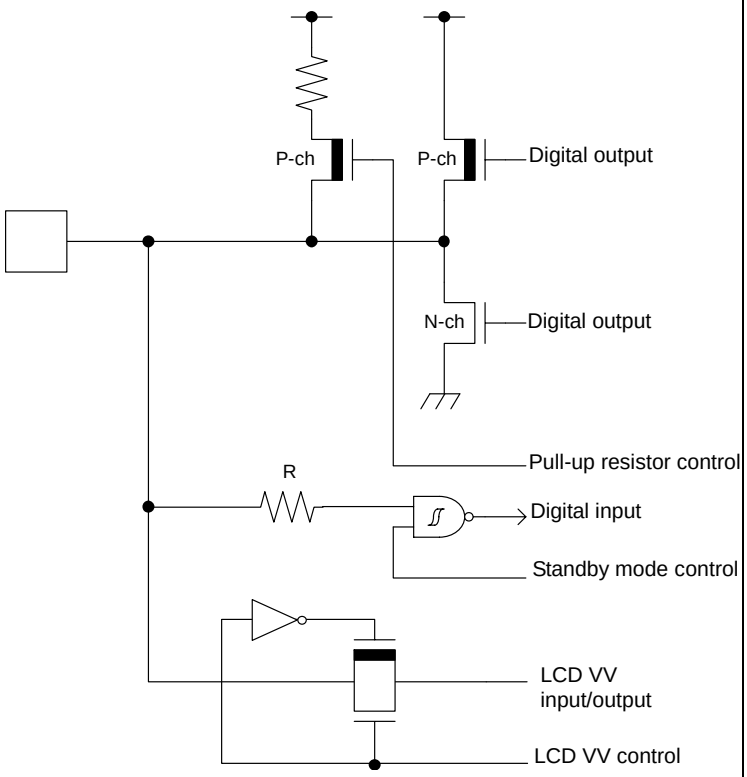	– CMOS level output – CMOS level hysteresis input – With input control – LCD-VV input/output – With pull-up resistor control – With standby mode control – Pull-up resistor: Approximately 33 kΩ – IOH= -4 mA, IOL= 4 mA – When this pin is used as an I2C pin, the digital output P-ch transistor is always off
K	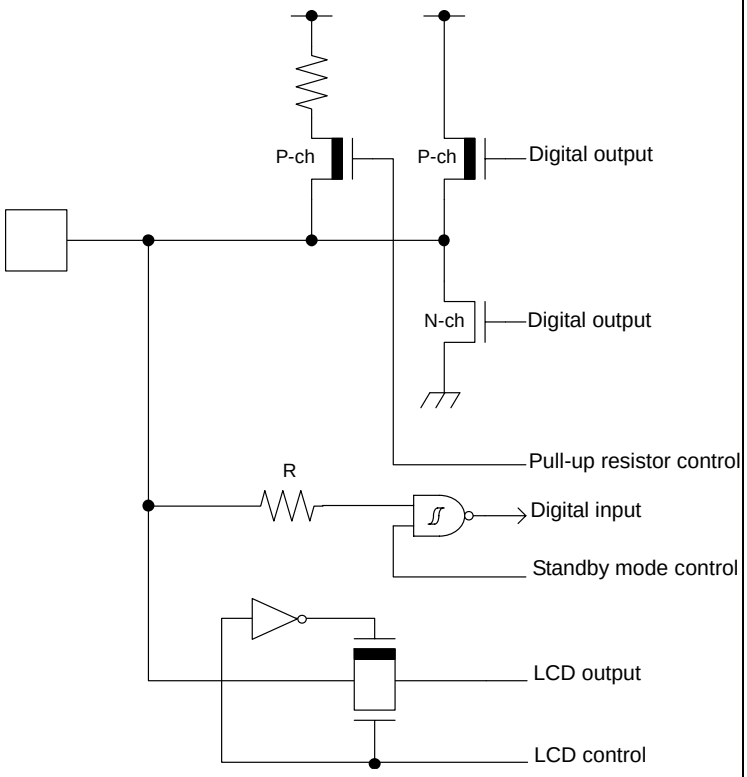	– CMOS level output – CMOS level hysteresis input – With input control – LCD output – With pull-up resistor control – With standby mode control – Pull-up resistor: Approximately 33 kΩ – IOH= -4 mA, IOL= 4 mA – When this pin is used as an I2C pin, the digital output P-ch transistor is always off

Type	Circuit	Remarks
L	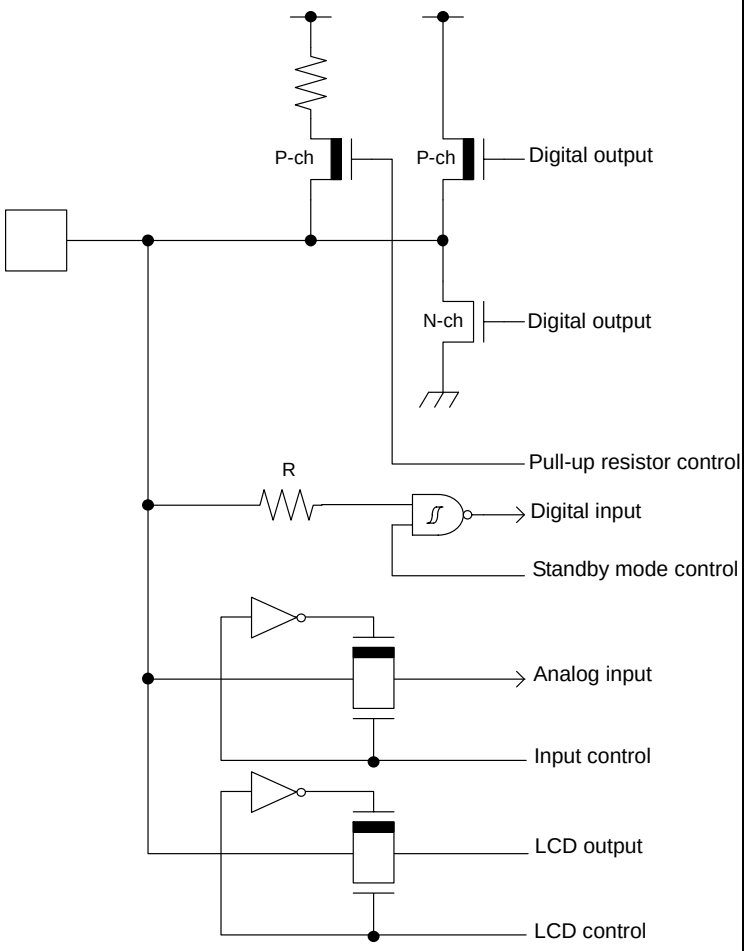	– CMOS level output – CMOS level hysteresis input – With input control – LCD output – With pull-up resistor control – With standby mode control – Pull-up resistor: Approximately 33 kΩ – IOH= -4 mA, IOL= 4 mA – When this pin is used as an I2C pin, the digital output P-ch transistor is always off

6. Handling Precautions

Any semiconductor device has inherently a certain rate of failure. The possibility of failure is greatly affected by the conditions in which they are used (circuit conditions, environmental conditions, etc.). This page describes precautions that must be observed to minimize the chance of failure and to obtain higher reliability from your Cypress semiconductor devices.

6.1 Precautions for Product Design

This section describes precautions when designing electronic equipment using semiconductor devices.

Absolute Maximum Ratings

Semiconductor devices can be permanently damaged by application of stress (voltage, current, temperature, etc.) in excess of certain established limits, called absolute maximum ratings. Do not exceed these ratings.

Recommended Operating Conditions

Recommended operating conditions are normal operating ranges for the semiconductor device. All the device's electrical characteristics are warranted when operated within these ranges.

Always use semiconductor devices within the recommended operating conditions. Operation outside these ranges may adversely affect reliability and could result in device failure.

No warranty is made with respect to uses, operating conditions, or combinations not represented on the data sheet. Users considering application outside the listed conditions are advised to contact their sales representative beforehand.

Processing and Protection of Pins

These precautions must be followed when handling the pins which connect semiconductor devices to power supply and input/output functions.

1. Preventing Over-Voltage and Over-Current Conditions

Exposure to voltage or current levels in excess of maximum ratings at any pin is likely to cause deterioration within the device, and in extreme cases leads to permanent damage of the device. Try to prevent such overvoltage or over-current conditions at the design stage.

2. Protection of Output Pins

Shorting of output pins to supply pins or other output pins, or connection to large capacitance can cause large current flows. Such conditions if present for extended periods of time can damage the device.
Therefore, avoid this type of connection.

3. Handling of Unused Input Pins

Unconnected input pins with very high impedance levels can adversely affect stability of operation. Such pins should be connected through an appropriate resistance to a power supply pin or ground pin.

Latch-up

Semiconductor devices are constructed by the formation of P-type and N-type areas on a substrate. When subjected to abnormally high voltages, internal parasitic PNPN junctions (called thyristor structures) may be formed, causing large current levels in excess of several hundred mA to flow continuously at the power supply pin. This condition is called latch-up.

CAUTION: The occurrence of latch-up not only causes loss of reliability in the semiconductor device, but can cause injury or damage from high heat, smoke or flame. To prevent this from happening, do the following:

1. *Be sure that voltages applied to pins do not exceed the absolute maximum ratings. This should include attention to abnormal noise, surge levels, etc.*
2. *Be sure that abnormal current flows do not occur during the power-on sequence.*

Observance of Safety Regulations and Standards

Most countries in the world have established standards and regulations regarding safety, protection from electromagnetic interference, etc. Customers are requested to observe applicable regulations and standards in the design of products.

Fail-Safe Design

Any semiconductor devices have inherently a certain rate of failure. You must protect against injury, damage or loss from such failures by incorporating safety design measures into your facility and equipment such as redundancy, fire protection, and prevention of over-current levels and other abnormal operating conditions.

Precautions Related to Usage of Devices

Cypress semiconductor devices are intended for use in standard applications (computers, office automation and other office equipment, industrial, communications, and measurement equipment, personal or household devices, etc.).

CAUTION: Customers considering the use of our products in special applications where failure or abnormal operation may directly affect human lives or cause physical injury or property damage, or where extremely high levels of reliability are demanded (such as aerospace systems, atomic energy controls, sea floor repeaters, vehicle operating controls, medical devices for life support, etc.) are requested to consult with sales representatives before such use. The company will not be responsible for damages arising from such use without prior approval.

6.2 Precautions for Package Mounting

Package mounting may be either lead insertion type or surface mount type. In either case, for heat resistance during soldering, you should only mount under Cypress's recommended conditions. For detailed information about mount conditions, contact your sales representative.

Lead Insertion Type

Mounting of lead insertion type packages onto printed circuit boards may be done by two methods: direct soldering on the board, or mounting by using a socket.

Direct mounting onto boards normally involves processes for inserting leads into through-holes on the board and using the flow soldering (wave soldering) method of applying liquid solder. In this case, the soldering process usually causes leads to be subjected to thermal stress in excess of the absolute ratings for storage temperature. Mounting processes should conform to Cypress recommended mounting conditions.

If socket mounting is used, differences in surface treatment of the socket contacts and IC lead surfaces can lead to contact deterioration after long periods. For this reason it is recommended that the surface treatment of socket contacts and IC leads be verified before mounting.

Surface Mount Type

Surface mount packaging has longer and thinner leads than lead-insertion packaging, and therefore leads are more easily deformed or bent. The use of packages with higher pin counts and narrower pin pitch results in increased susceptibility to open connections caused by deformed pins, or shorting due to solder bridges.

You must use appropriate mounting techniques. Cypress Inc. recommends the solder reflow method, and has established a ranking of mounting conditions for each product. Users are advised to mount packages in accordance with Cypress ranking of recommended conditions.

Lead-Free Packaging

CAUTION: When ball grid array (BGA) packages with Sn-Ag-Cu balls are mounted using Sn-Pb eutectic soldering, junction strength may be reduced under some conditions of use.

Storage of Semiconductor Devices

Because plastic chip packages are formed from plastic resins, exposure to natural environmental conditions will cause absorption of moisture. During mounting, the application of heat to a package that has absorbed moisture can cause surfaces to peel, reducing moisture resistance and causing packages to crack. To prevent, do the following:

1. Avoid exposure to rapid temperature changes, which cause moisture to condense inside the product. Store products in locations where temperature changes are slight.
2. Use dry boxes for product storage. Products should be stored below 70% relative humidity, and at temperatures between 5°C and 30°C.
   When you open Dry Package that recommends humidity 40% to 70% relative humidity.
3. When necessary, Cypress Inc. packages semiconductor devices in highly moisture-resistant aluminum laminate bags, with a silica gel desiccant. Devices should be sealed in their aluminum laminate bags for storage.
4. Avoid storing packages where they are exposed to corrosive gases or high levels of dust.

Baking

Packages that have absorbed moisture may be de-moisturized by baking (heat drying). Follow the Cypress recommended conditions for baking.

Condition: 125°C/24 h

Static Electricity

Because semiconductor devices are particularly susceptible to damage by static electricity, you must take the following precautions:

1. Maintain relative humidity in the working environment between 40% and 70%. Use of an apparatus for ion generation may be needed to remove electricity.
2. Electrically ground all conveyors, solder vessels, soldering irons and peripheral equipment.
3. Eliminate static body electricity by the use of rings or bracelets connected to ground through high resistance (on the level of 1 MΩ).
   Wearing of conductive clothing and shoes, use of conductive floor mats and other measures to minimize shock loads is recommended.
4. Ground all fixtures and instruments, or protect with anti-static measures.
5. Avoid the use of styrofoam or other highly static-prone materials for storage of completed board assemblies.

6.3 Precautions for Use Environment

Reliability of semiconductor devices depends on ambient temperature and other conditions as described above.

For reliable performance, do the following:

1. Humidity

Prolonged use in high humidity can lead to leakage in devices as well as printed circuit boards. If high humidity levels are anticipated, consider anti-humidity processing.

2. Discharge of Static Electricity

When high-voltage charges exist close to semiconductor devices, discharges can cause abnormal operation. In such cases, use anti-static measures or processing to prevent discharges.

3. Corrosive Gases, Dust, or Oil

Exposure to corrosive gases or contact with dust or oil may lead to chemical reactions that will adversely affect the device. If you use devices in such conditions, consider ways to prevent such exposure or to protect the devices.

4. Radiation, Including Cosmic Radiation

Most devices are not designed for environments involving exposure to radiation or cosmic radiation. Users should provide shielding as appropriate.

5. Smoke, Flame

CAUTION: Plastic molded devices are flammable, and therefore should not be used near combustible substances. If devices begin to smoke or burn, there is danger of the release of toxic gases.

Customers considering the use of Cypress products in other special environmental conditions should consult with sales representatives.

7. Handling Devices

Power supply pins

In products with multiple VCC and VSS pins, respective pins at the same potential are interconnected within the device in order to prevent malfunctions such as latch-up. However, all of these pins should be connected externally to the power supply or ground lines in order to reduce electromagnetic emission levels, to prevent abnormal operation of strobe signals caused by the rise in the ground level, and to conform to the total output current rating.

Moreover, connect the current supply source with each Power supply pin and GND pin of this device at low impedance. It is also advisable that a ceramic capacitor of approximately 0.1 µF be connected as a bypass capacitor between each Power supply pin and GND pin, between AVCC pin and AVSS pin near this device.

Stabilizing supply voltage

A malfunction may occur when the power supply voltage fluctuates rapidly even though the fluctuation is within the recommended operating conditions of the VCC power supply voltage. As a rule, with voltage stabilization, suppress the voltage fluctuation so that the fluctuation in VCC ripple (peak-to-peak value) at the commercial frequency (50 Hz/60 Hz) does not exceed 10% of the VCC value in the recommended operating conditions, and the transient fluctuation rate does not exceed 0.1 V/µs when there is a momentary fluctuation on switching the power supply.

Crystal oscillator circuit

Noise near the X0/X1 and X0A/X1A pins may cause the device to malfunction. Design the printed circuit board so that X0/X1, X0A/X1A pins, the crystal oscillator, and the bypass capacitor to ground are located as close to the device as possible.

It is strongly recommended that the PC board artwork be designed such that the X0/X1 and X0A/X1A pins are surrounded by ground plane as this is expected to produce stable operation.

Evaluate oscillation of your using crystal oscillator by your mount board.

Sub crystal oscillator

This series sub oscillator circuit is low gain to keep the low current consumption.
The crystal oscillator to fill the following conditions is recommended for sub crystal oscillator to stabilize the oscillation.

Surface mount type
Size: More than 3.2 mm × 1.5 mm
Load capacitance: Approximately 6 pF to 7 pF Lead type
Load capacitance: Approximately 6 pF to 7 pF

Using an external clock

When using an external clock as an input of the main clock, set X0/X1 to the external clock input, and input the clock to X0. X1(PE3) can be used as a general-purpose I/O port.
Similarly, when using an external clock as an input of the sub clock, set X0A/X1A to the external clock input, and input the clock to X0A. X1A (P47) can be used as a general-purpose I/O port.

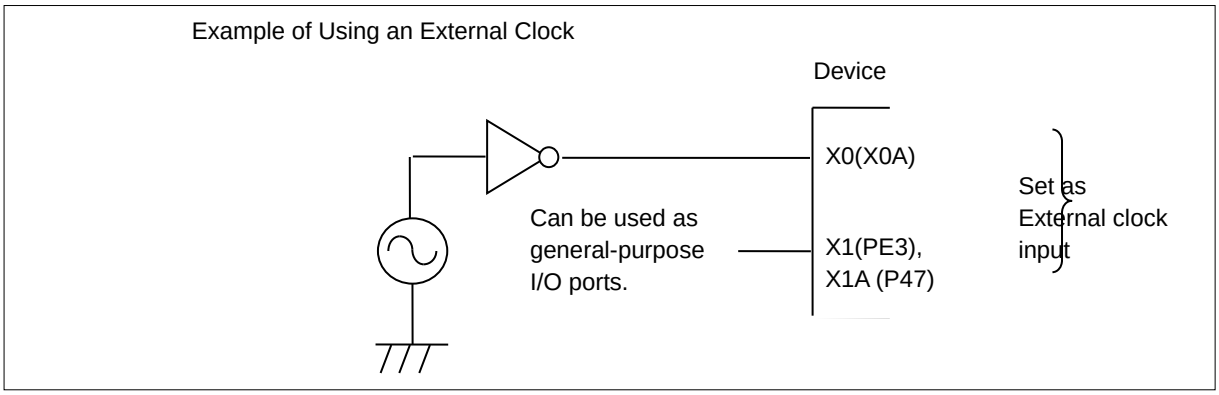

Handling when using Multi-function serial pin as I²C pin

If it is using the multi-function serial pin as I²C pins, P-ch transistor of digital output is always disabled. However, I²C pins need to keep the electrical characteristic like other pins and not to connect to the external I²C bus system with power OFF.

C Pin

This series contains the regulator. Be sure to connect a smoothing capacitor (C_S) for the regulator between the C pin and the GND pin. Please use a ceramic capacitor or a capacitor of equivalent frequency characteristics as a smoothing capacitor.
However, some laminated ceramic capacitors have the characteristics of capacitance variation due to thermal fluctuation (F characteristics and Y5V characteristics). Please select the capacitor that meets the specifications in the operating conditions to use by evaluating the temperature characteristics of a capacitor.
A smoothing capacitor of about 4.7µF would be recommended for this series.

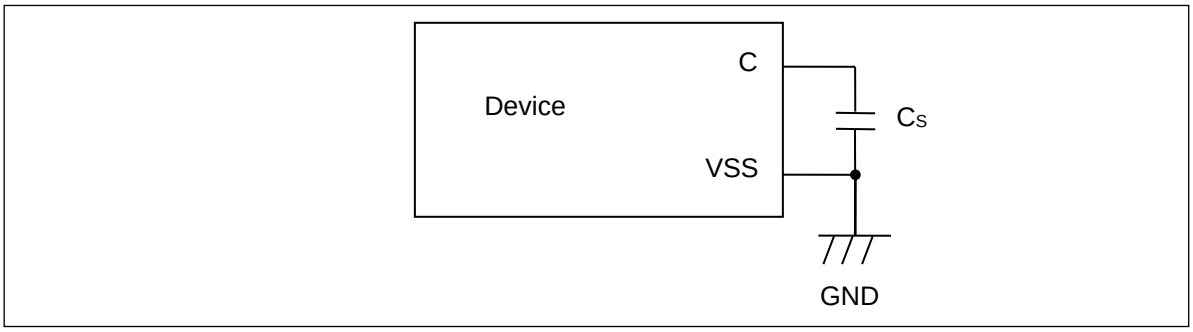

Mode pins (MD0)

Connect the MD pin (MD0) directly to VCC or VSS pins. Design the printed circuit board such that the pull-up/down resistance stays low, as well as the distance between the mode pins and VCC pins or VSS pins is as short as possible and the connection impedance is low, when the pins are pulled-up/down such as for switching the pin level and rewriting the Flash memory data. It is because of preventing the device erroneously switching to test mode due to noise.

Notes on power-on

Turn power on/off in the following order or at the same time.
If not using the A/D converter, connect AVCC = VCC and AVSS = VSS.

Turning on : VCC →AVCC → AVRH

Turning off : AVRH → AVCC → VCC

Serial Communication

There is a possibility to receive wrong data due to the noise or other causes on the serial communication.
Therefore, design a printed circuit board so as to avoid noise.
Consider the case of receiving wrong data due to noise, perform error detection such as by applying a checksum of data at the end. If an error is detected, retransmit the data.

Differences in features among the products with different memory sizes and between Flash memory products and MASK products

The electric characteristics including power consumption, ESD, latch-up, noise characteristics, and oscillation characteristics among the products with different memory sizes and between Flash memory products and MASK products are different because chip layout and memory structures are different.

If you are switching to use a different product of the same series, please make sure to evaluate the electric characteristics.

Pull-Up function of 5 V tolerant I/O

Please do not input the signal more than VCC voltage at the time of Pull-Up function use of 5 V tolerant I/O.

8. Block Diagram

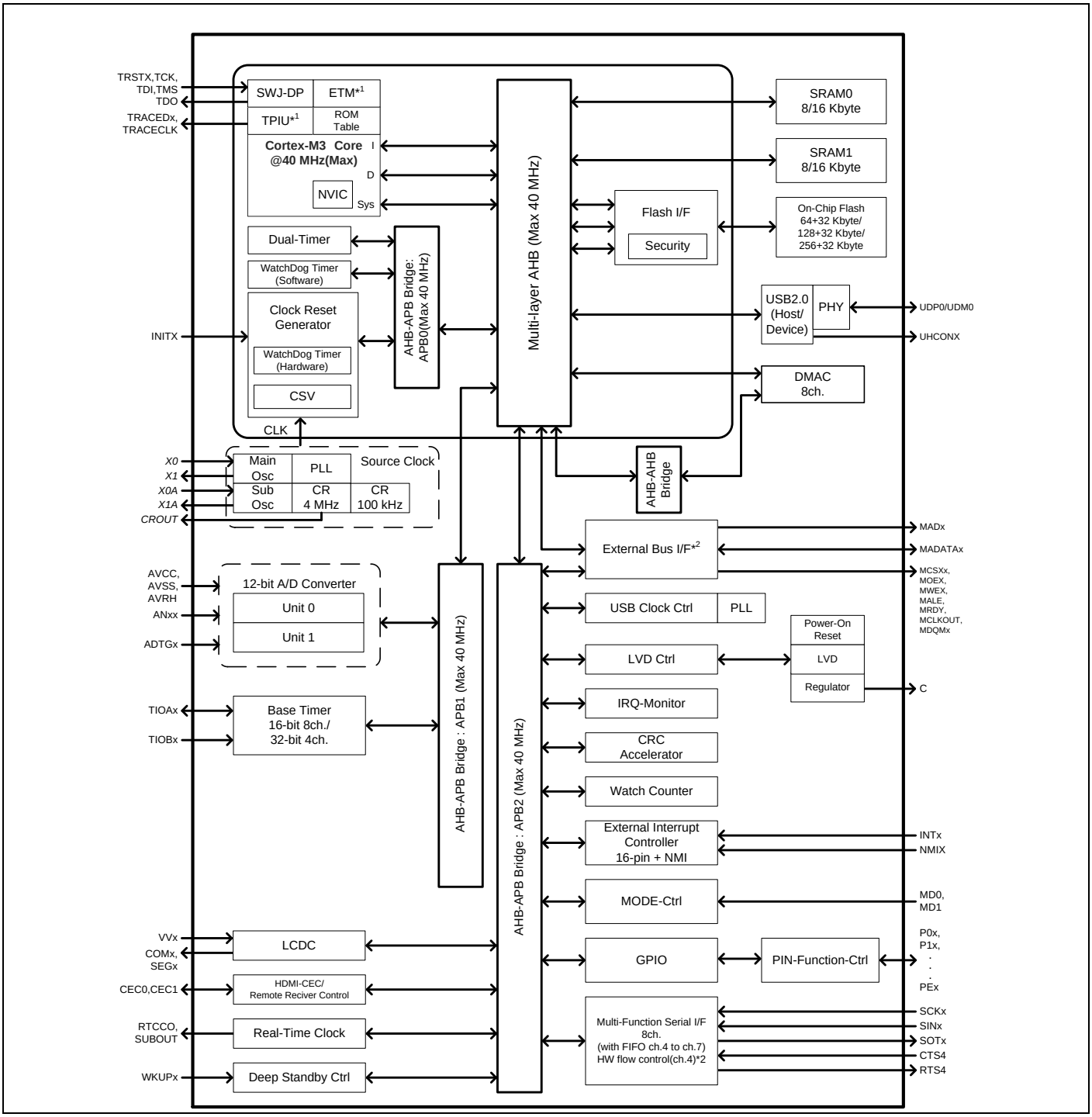

*1: For the CY9AFB41LB/MB, CY9AFB42LB/MB, and CY9AFB44LB/MB, ETM is not available.

*2: For the CY9AFB41LB, CY9AFB42LB and CY9AFB44LB, the External Bus Interface is not available. And the Multi-function Serial Interface does not support hardware flow control in these products.

9. Memory Size

See Memory size in Product Lineup to confirm the memory size.

10. Memory Map

Memory Map (1)

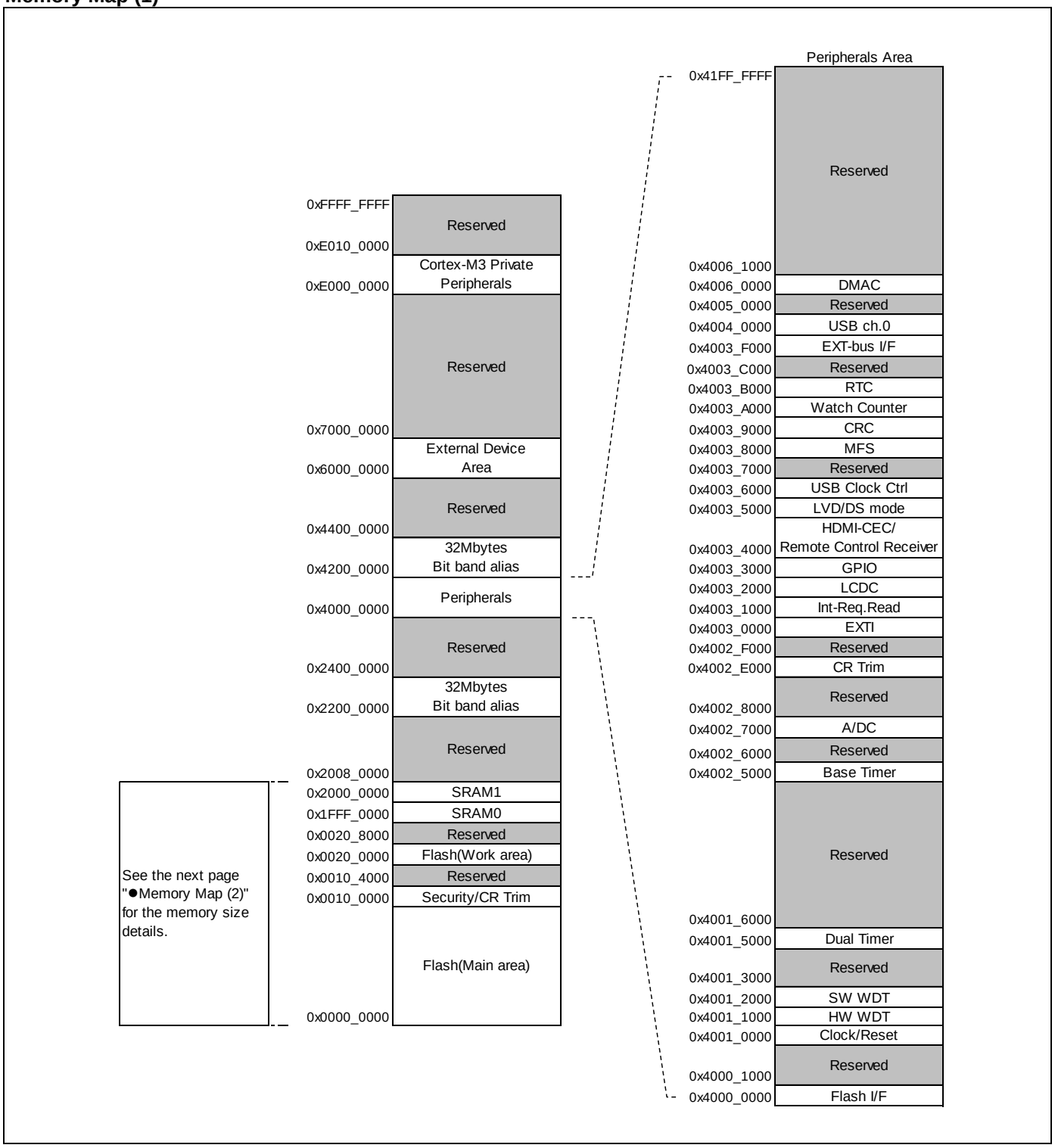

Memory Map (2)

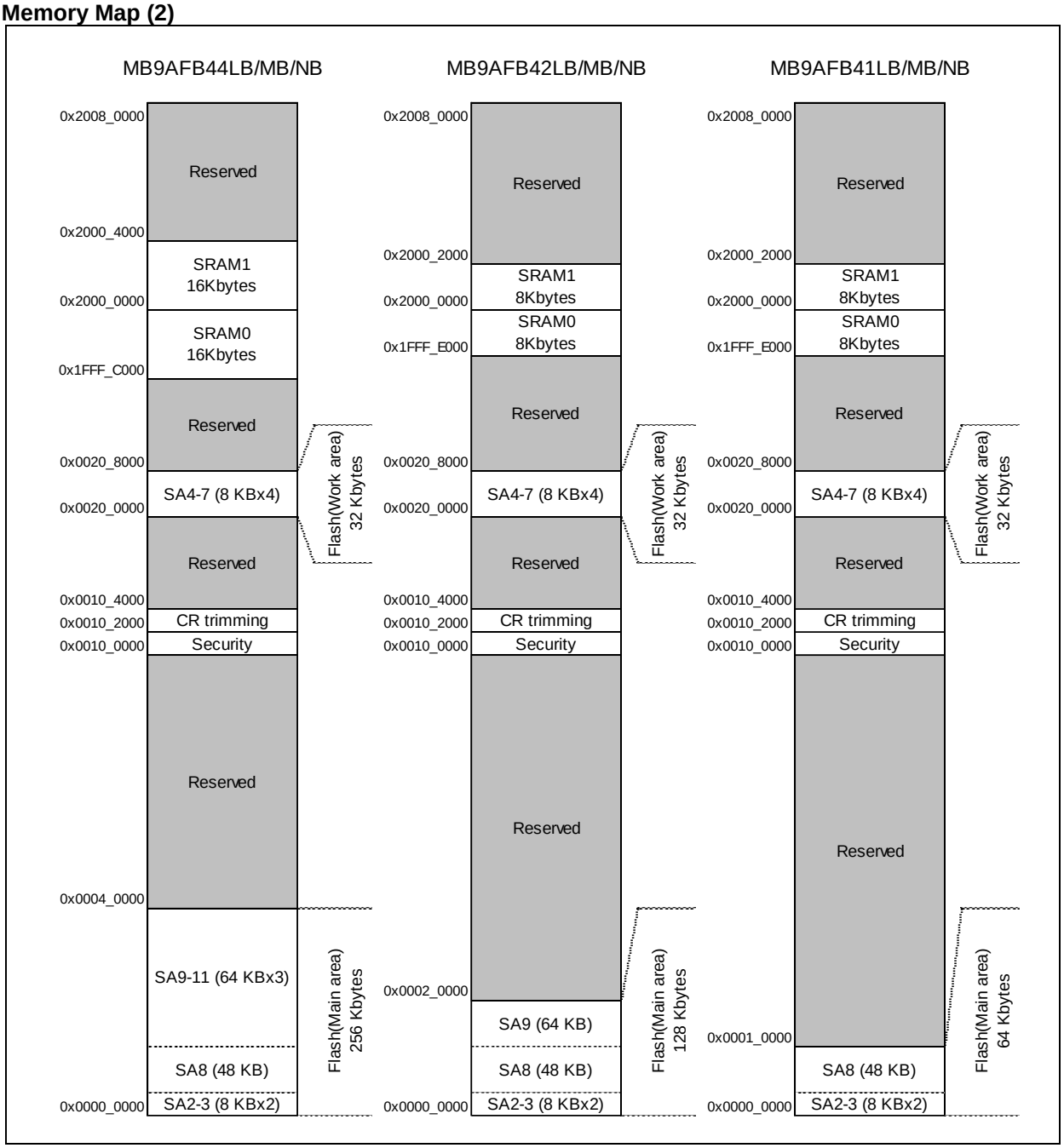

Refer to the programming manual for the detail of Flash main area.

CY9AB40N/A40N/340N/140N/150R, CY9B520M/320M/120M Series Flash Programming Manual

Peripheral Address Map

Start address	End address	Bus	Peripherals
0x4000_0000	0x4000_0FFF	AHB	Flash memory I/F register
0x4000_1000	0x4000_FFFF		Reserved
0x4001_0000	0x4001_0FFF	APB0	Clock/Reset Control
0x4001_1000	0x4001_1FFF		Hardware Watchdog timer
0x4001_2000	0x4001_2FFF		Software Watchdog timer
0x4001_3000	0x4001_4FFF		Reserved
0x4001_5000	0x4001_5FFF		Dual Timer
0x4001_6000	0x4001_FFFF		Reserved
0x4002_0000	0x4002_4FFF	APB1	Reserved
0x4002_5000	0x4002_5FFF		Base Timer
0x4002_6000	0x4002_6FFF		Reserved
0x4002_7000	0x4002_7FFF		A/D Converter
0x4002_8000	0x4002_DFFF		Reserved
0x4002_E000	0x4002_EFFF		Built-in CR trimming
0x4002_F000	0x4002_FFFF		Reserved
0x4003_0000	0x4003_0FFF	APB2	External Interrupt
0x4003_1000	0x4003_1FFF		Interrupt source check register
0x4003_2000	0x4003_2FFF		LCDC
0x4003_3000	0x4003_3FFF		GPIO
0x4003_4000	0x4003_4FFF		HDMI-CEC/Remote control Receiver
0x4003_5000	0x4003_57FF		Low-Voltage Detector
0x4003_5800	0x4003_5FFF		Deep standby mode Controller
0x4003_6000	0x4003_6FFF		USB clock generator
0x4003_7000	0x4003_7FFF		Reserved
0x4003_8000	0x4003_8FFF		Multi-function serial
0x4003_9000	0x4003_9FFF		CRC
0x4003_A000	0x4003_AFFF		Watch Counter
0x4003_B000	0x4003_BFFF		Real-time clock
0x4003_C000	0x4003_EFFF		Reserved
0x4003_F000	0x4003_FFFF		External Memory interface
0x4004_0000	0x4004_FFFF	AHB	USB ch.0
0x4005_0000	0x4005_FFFF		Reserved
0x4006_0000	0x4006_0FFF		DMAC register
0x4006_1000	0x41FF_FFFF		Reserved

11. Pin Status in Each CPU State

The terms used for pin status have the following meanings.

- INITX=0

This is the period when the INITX pin is the L level.

- INITX=1

This is the period when the INITX pin is the H level.

- SPL=0

This is the status that the standby pin level setting bit (SPL) in the standby mode control register (STB_CTL) is set to 0.

- SPL=1

This is the status that the standby pin level setting bit (SPL) in the standby mode control register (STB_CTL) is set to 1.

- Input enabled

Indicates that the input function can be used.

- Internal input fixed at 0

This is the status that the input function cannot be used. Internal input is fixed at L.

- Hi-Z

Indicates that the pin drive transistor is disabled and the pin is put in the Hi-Z state.

- Setting disabled

Indicates that the setting is disabled.

- Maintain previous state

Maintains the state that was immediately prior to entering the current mode.
If a built-in peripheral function is operating, the output follows the peripheral function.
If the pin is being used as a port, that output is maintained.

- Analog input is enabled

Indicates that the analog input is enabled.

- Trace output

Indicates that the trace function can be used.

- GPIO selected

In Deep standby mode, pins switch to the general-purpose I/O port.

List of Pin Status

Pin status type	Function group	Power-on reset or low-voltage detection state	INITX input state	Device internal reset state	Run mode or Sleep mode state	Timer mode, RTC mode, or Sleep mode state		Deep standby RTC mode or Deep standby Stop mode state		Return from Deep standby mode state
		Power supply unstable	Power supply stable		Power supply stable	Power supply stable		Power supply stable		Power supply stable
		-	INITX = 0	INITX = 1	INITX = 1	INITX = 1		INITX = 1		INITX = 1
		-	-	-	-	SPL = 0	SPL = 1	SPL = 0	SPL = 1	-
A	GPIO selected	Setting disabled	Setting disabled	Setting disabled	Maintain previous state	Maintain previous state	Hi-Z / Internal input fixed at 0	GPIO selected Internal input fixed at 0	Hi-Z / Internal input fixed at 0	GPIO selected
	Main crystal oscillator input pin/ External main clock input selected	Input enabled	Input enabled	Input enabled	Input enabled	Input enabled	Input enabled	Input enabled	Input enabled	Input enabled
B	GPIO selected	Setting disabled	Setting disabled	Setting disabled	Maintain previous state	Maintain previous state	Hi-Z / Internal input fixed at 0	GPIO selected Internal input fixed at 0	Hi-Z / Internal input fixed at 0	GPIO selected
	External main clock input selected	Setting disabled	Setting disabled	Setting disabled	Maintain previous state	Maintain previous state	Hi-Z / Internal input fixed at 0	Maintain previous state	Hi-Z / Internal input fixed at 0	Maintain previous state
	Main crystal oscillator output pin	Hi-Z / Internal input fixed at 0/ or Input enabled	Hi-Z / Internal input fixed at 0	Hi-Z / Internal input fixed at 0	Maintain previous state/ When oscillation stops[1], Hi-Z / Internal input fixed at 0	Maintain previous state/ When oscillation stops[1], Hi-Z / Internal input fixed at 0	Maintain previous state/ When oscillation stops[1], Hi-Z / Internal input fixed at 0	Maintain previous state/ When oscillation stops[1], Hi-Z / Internal input fixed at 0	Maintain previous state/ When oscillation stops[1], Hi-Z / Internal input fixed at 0	Maintain previous state/ When oscillation stops[1], Hi-Z / Internal input fixed at 0
C	INITX input pin	Pull-up / Input enabled	Pull-up / Input enabled	Pull-up / Input enabled	Pull-up / Input enabled	Pull-up / Input enabled	Pull-up / Input enabled	Pull-up / Input enabled	Pull-up / Input enabled	Pull-up / Input enabled
D	Mode input pin	Input enabled	Input enabled	Input enabled	Input enabled	Input enabled	Input enabled	Input enabled	Input enabled	Input enabled

Pin status type	Function group	Power-on reset or low-voltage detection state	INITX input state	Device internal reset state	Run mode or Sleep mode state	Timer mode, RTC mode, or Sleep mode state		Deep standby RTC mode or Deep standby Stop mode state		Return from Deep standby mode state
		Power supply unstable	Power supply stable		Power supply stable	Power supply stable		Power supply stable		Power supply stable
		-	INITX = 0	INITX = 1	INITX = 1	INITX = 1		INITX = 1		INITX = 1
		-	-	-	-	SPL = 0	SPL = 1	SPL = 0	SPL = 1	-
E	Mode input pin	Input enabled	Input enabled	Input enabled	Input enabled	Input enabled	Input enabled	Input enabled	Input enabled	Input enabled
	GPIO selected	Setting disabled	Setting disabled	Setting disabled	Maintain previous state	Maintain previous state	Hi-Z / Input enabled	GPIO selected	Hi-Z / Input enabled	GPIO selected
F	GPIO selected	Setting disabled	Setting disabled	Setting disabled	Maintain previous state	Maintain previous state	Hi-Z / Internal input fixed at 0	GPIO selected Internal input fixed at 0	Hi-Z / Internal input fixed at 0	GPIO selected
	Sub crystal oscillator input pin / External sub clock input selected	Input enabled	Input enabled	Input enabled	Input enabled	Input enabled	Input enabled	Input enabled	Input enabled	Input enabled
G	GPIO selected	Setting disabled	Setting disabled	Setting disabled	Maintain previous state	Maintain previous state	Hi-Z / Internal input fixed at 0	GPIO selected Internal input fixed at 0	Hi-Z / Internal input fixed at 0	GPIO selected
	External sub clock input selected	Setting disabled	Setting disabled	Setting disabled	Maintain previous state	Maintain previous state	Hi-Z / Internal input fixed at 0	Maintain previous state	Hi-Z/ Internal input fixed at 0	Maintain previous state
	Sub crystal oscillator output pin	Hi-Z / Internal input fixed at 0/ or Input enable	Hi-Z / Internal input fixed at 0	Hi-Z / Internal input fixed at 0	Maintain previous state	Maintain previous state/When oscillation stops[2], Hi-Z / Internal input fixed at 0	Maintain previous state/When oscillation stops[2], Hi-Z / Internal input fixed at 0	Maintain previous state/When oscillation stops[2], Hi-Z/ Internal input fixed at 0	Maintain previous state/When oscillation stops[2], Hi-Z/ Internal input fixed at 0	Maintain previous state/When oscillation stops[2], Hi-Z/ Internal input fixed at 0

Pin status type	Function group	Power-on reset or low-voltage detection state	INITX input state	Device internal reset state	Run mode or Sleep mode state	Timer mode, RTC mode, or Sleep mode state		Deep standby RTC mode or Deep standby Stop mode state		Return from Deep standby mode state
		Power supply unstable	Power supply stable		Power supply stable	Power supply stable		Power supply stable		Power supply stable
		-	INITX = 0	INITX = 1	INITX = 1	INITX = 1		INITX = 1		INITX = 1
		-	-	-	-	SPL = 0	SPL = 1	SPL = 0	SPL = 1	-
H	GPIO selected	Hi-Z	Hi-Z / Input enabled	Hi-Z / Input enabled	Maintain previous state	Maintain previous state	Hi-Z / Internal input fixed at 0	GPIO selected Internal input fixed at 0	Hi-Z / Internal input fixed at 0	GPIO selected
	USB I/O pin	Setting disabled	Setting disabled	Setting disabled	Maintain previous state	Hi-Z at trans-mission/ Input enabled/ Internal input fixed at 0 at reception	Hi-Z at trans-mission/ Input enabled/ Internal input fixed at 0 at reception	Hi-Z / Input enabled	Hi-Z / Input enabled	Hi-Z / Input enabled
I	NMIX selected	Setting disabled	Setting disabled	Setting disabled	Maintain previous state	Maintain previous state	Maintain previous state	WKUP input enabled	Hi-Z / WKUP input enabled	GPIO selected
	Resource other than above selected	Hi-Z	Hi-Z / Input enabled	Hi-Z / Input enabled			Hi-Z / Internal input fixed at 0			
	GPIO selected									
J	JTAG selected	Hi-Z	Pull-up / Input enabled	Pull-up / Input enabled	Maintain previous state	Maintain previous state	Maintain previous state	Maintain previous state	Maintain previous state	Maintain previous state
	GPIO selected	Setting disabled	Setting disabled	Setting disabled			Hi-Z / Internal input fixed at 0	GPIO selected Internal input fixed at 0	Hi-Z / Internal input fixed at 0	GPIO selected
K	Resource selected	Hi-Z	Hi-Z / Input enabled	Hi-Z / Input enabled	Maintain previous state	Maintain previous state	Hi-Z / Internal input fixed at 0	GPIO selected Internal input fixed at 0	Hi-Z / Internal input fixed at 0	GPIO selected
	GPIO selected									

Pin status type	Function group	Power-on reset or low-voltage detection state	INITX input state	Device internal reset state	Run mode or Sleep mode state	Timer mode, RTC mode, or Sleep mode state		Deep standby RTC mode or Deep standby Stop mode state		Return from Deep standby mode state
		Power supply unstable	Power supply stable		Power supply stable	Power supply stable		Power supply stable		Power supply stable
		-	INITX = 0	INITX = 1	INITX = 1	INITX = 1		INITX = 1		INITX = 1
		-	-	-	-	SPL = 0	SPL = 1	SPL = 0	SPL = 1	-
L	External interrupt enabled selected	Setting disabled	Setting disabled	Setting disabled	Maintain previous state	Maintain previous state	Maintain previous state	GPIO selected Internal input fixed at 0	Hi-Z / Internal input fixed at 0	GPIO selected
	Resource other than above selected	Hi-Z	Hi-Z / Input enabled	Hi-Z / Input enabled			Hi-Z / Internal input fixed at 0			
	GPIO selected									
M	Analog input selected	Hi-Z	Hi-Z / Internal input fixed at 0 / Analog input enabled	Hi-Z / Internal input fixed at 0 / Analog input enabled	Hi-Z / Internal input fixed at 0 / Analog input enabled	Hi-Z / Internal input fixed at 0 / Analog input enabled	Hi-Z / Internal input fixed at 0 / Analog input enabled	Hi-Z / Internal input fixed at 0 / Analog input enabled	Hi-Z / Internal input fixed at 0 / Analog input enabled	Hi-Z / Internal input fixed at 0 / Analog input enabled
	Resource other than above selected	Setting disabled	Setting disabled	Setting disabled	Maintain previous state	Maintain previous state	Hi-Z / Internal input fixed at 0	GPIO selected Internal input fixed at 0	Hi-Z / Internal input fixed at 0	GPIO selected
	GPIO selected									
N	Analog input selected	Hi-Z	Hi-Z / Internal input fixed at 0 / Analog input enabled	Hi-Z / Internal input fixed at 0 / Analog input enabled	Hi-Z / Internal input fixed at 0 / Analog input enabled	Hi-Z / Internal input fixed at 0 / Analog input enabled	Hi-Z / Internal input fixed at 0 / Analog input enabled	Hi-Z / Internal input fixed at 0 / Analog input enabled	Hi-Z / Internal input fixed at 0 / Analog input enabled	Hi-Z / Internal input fixed at 0 / Analog input enabled
	External interrupt enabled selected	Setting disabled	Setting disabled	Setting disabled	Maintain previous state	Maintain previous state	Maintain previous state	GPIO selected Internal input fixed at 0	Hi-Z / Internal input fixed at 0	GPIO selected Internal input fixed at 0
	Resource other than above selected						Hi-Z / Internal input fixed at 0			
	GPIO selected									

Pin status type	Function group	Power-on reset or low-voltage detection state	INITX input state	Device internal reset state	Run mode or Sleep mode state	Timer mode, RTC mode, or Sleep mode state		Deep standby RTC mode or Deep standby Stop mode state		Return from Deep standby mode state
		Power supply unstable	Power supply stable		Power supply stable	Power supply stable		Power supply stable		Power supply stable
		-	INITX = 0	INITX = 1	INITX = 1	INITX = 1		INITX = 1		INITX = 1
		-	-	-	-	SPL = 0	SPL = 1	SPL = 0	SPL = 1	-
O	Trace selected	Setting disabled	Setting disabled	Setting disabled	Maintain previous state	Maintain previous state	Trace output	GPIO selected Internal input fixed at 0	Hi-Z / Internal input fixed at 0	GPIO selected Internal input fixed at 0
	Resource other than above selected	Hi-Z	Hi-Z / Internal input fixed at 0	Hi-Z / Internal input fixed at 0			Hi-Z / Internal input fixed at 0			
	GPIO selected									
P	Analog input selected	Hi-Z	Hi-Z / Internal input fixed at 0 / Analog input enabled	Hi-Z / Internal input fixed at 0 / Analog input enabled	Hi-Z / Internal input fixed at 0 / Analog input enabled	Hi-Z / Internal input fixed at 0 / Analog input enabled	Hi-Z / Internal input fixed at 0 / Analog input enabled	Hi-Z / Internal input fixed at 0 / Analog input enabled	Hi-Z / Internal input fixed at 0 / Analog input enabled	Hi-Z / Internal input fixed at 0 / Analog input enabled
	Trace selected	Setting disabled	Setting disabled	Setting disabled	Maintain previous state	Maintain previous state	Trace output	GPIO selected Internal input fixed at 0	Hi-Z / Internal input fixed at 0	GPIO selected Internal input fixed at 0
	Resource other than above selected						Hi-Z / Internal input fixed at 0			
	GPIO selected									
Q	Analog input selected	Hi-Z	Hi-Z / Internal input fixed at 0 / Analog input enabled	Hi-Z / Internal input fixed at 0 / Analog input enabled	Hi-Z / Internal input fixed at 0 / Analog input enabled	Hi-Z / Internal input fixed at 0 / Analog input enabled	Hi-Z / Internal input fixed at 0 / Analog input enabled	Hi-Z / Internal input fixed at 0 / Analog input enabled	Hi-Z / Internal input fixed at 0 / Analog input enabled	Hi-Z / Internal input fixed at 0 / Analog input enabled
	Trace selected	Setting disabled	Setting disabled	Setting disabled	Maintain previous state	Maintain previous state	Trace output	GPIO selected Internal input fixed at 0	Hi-Z / Internal input fixed at 0	GPIO selected Internal input fixed at 0
	External interrupt enabled selected						Maintain previous state			
	Resource other than above selected						Hi-Z / Internal input fixed at 0			
	GPIO selected									

Pin status type	Function group	Power-on reset or low-voltage detection state	INITX input state	Device internal reset state	Run mode or Sleep mode state	Timer mode, RTC mode, or Sleep mode state		Deep standby RTC mode or Deep standby Stop mode state		Return from Deep standby mode state
		Power supply unstable	Power supply stable		Power supply stable	Power supply stable		Power supply stable		Power supply stable
		-	INITX = 0	INITX = 1	INITX = 1	INITX = 1		INITX = 1		INITX = 1
		-	-	-	-	SPL = 0	SPL = 1	SPL = 0	SPL = 1	-
R	Analog input selected	Hi-Z	Hi-Z / Internal input fixed at 0 / Analog input enabled	Hi-Z / Internal input fixed at 0 / Analog input enabled	Hi-Z / Internal input fixed at 0 / Analog input enabled	Hi-Z / Internal input fixed at 0 / Analog input enabled	Hi-Z / Internal input fixed at 0 / Analog input enabled	Hi-Z / Internal input fixed at 0 / Analog input enabled	Hi-Z / Internal input fixed at 0 / Analog input enabled	Hi-Z / Internal input fixed at 0 / Analog input enabled
	WKUP enabled	Setting disabled	Setting disabled	Setting disabled	Maintain previous state	Maintain previous state	Maintain previous state	WKUP input enabled	Hi-Z / WKUP input enabled	GPIO selected Internal input fixed at 0
	External interrupt enabled selected							GPIO selected Internal input fixed at 0	Hi-Z / Internal input fixed at 0	
	Resource other than above selected						Hi-Z / Internal input fixed at 0			
	GPIO selected									
S	CEC enabled	Setting disabled	Setting disabled	Setting disabled	Maintain previous state	Maintain previous state	Maintain previous state	Maintain previous state	Maintain previous state	Maintain previous state
	Resource other than above selected	Hi-Z	Hi-Z / Input enabled	Hi-Z / Input enabled	Maintain previous state	Maintain previous state	Hi-Z / Internal input fixed at 0	GPIO selected Internal input fixed at 0	Hi-Z / Internal input fixed at 0	GPIO selected
	GPIO selected									
T	CEC enabled	Setting disabled	Setting disabled	Setting disabled	Maintain previous state	Maintain previous state	Maintain previous state	Maintain previous state	Maintain previous state	Maintain previous state
	WKUP enabled	Setting disabled	Setting disabled	Setting disabled	Maintain previous state	Maintain previous state	Maintain previous state	WKUP input enabled	Hi-Z / WKUP input enabled	GPIO selected
	External interrupt enabled selected							GPIO selected Internal input fixed at 0	Hi-Z / Internal input fixed at 0	
	Resource other than above selected	Hi-Z	Hi-Z / Input enabled	Hi-Z / Input enabled			Hi-Z / Internal input fixed at 0			
	GPIO selected									

Pin status type	Function group	Power-on reset or low-voltage detection state	INITX input state	Device internal reset state	Run mode or Sleep mode state	Timer mode, RTC mode, or Sleep mode state		Deep standby RTC mode or Deep standby Stop mode state		Return from Deep standby mode state
		Power supply unstable	Power supply stable		Power supply stable	Power supply stable		Power supply stable		Power supply stable
		-	INITX = 0	INITX = 1	INITX = 1	INITX = 1		INITX = 1		INITX = 1
		-	-	-	-	SPL = 0	SPL = 1	SPL = 0	SPL = 1	-
U	resource selected	Hi-Z	Hi-Z / Internal input fixed at 0	Hi-Z / Internal input fixed at 0	Maintain previous state	Maintain previous state	Hi-Z / Internal input fixed at 0	GPIO selected Internal input fixed at 0	Hi-Z / Internal input fixed at 0	GPIO selected Internal input fixed at 0
	GPIO selected									
V	External interrupt enabled selected	Setting disabled	Setting disabled	Setting disabled	Maintain previous state	Maintain previous state	Maintain previous state	GPIO selected Internal input fixed at 0	Hi-Z / Internal input fixed at 0	GPIO selected Internal input fixed at 0
	Resource other than above selected	Hi-Z	Hi-Z / Internal input fixed at 0	Hi-Z / Internal input fixed at 0			Hi-Z / Internal input fixed at 0			
	GPIO selected									
W	Analog input selected	Hi-Z	Hi-Z / Internal input fixed at 0 / Analog input enabled	Hi-Z / Internal input fixed at 0 / Analog input enabled	Hi-Z / Internal input fixed at 0 / Analog input enabled	Hi-Z / Internal input fixed at 0 / Analog input enabled	Hi-Z / Internal input fixed at 0 / Analog input enabled	Hi-Z / Internal input fixed at 0 / Analog input enabled	Hi-Z / Internal input fixed at 0 / Analog input enabled	Hi-Z / Internal input fixed at 0 / Analog input enabled
	Resource other than above selected	Setting disabled	Setting disabled	Setting disabled	Maintain previous state	Maintain previous state	Hi-Z / Internal input fixed at 0	GPIO selected Internal input fixed at 0	Hi-Z / Internal input fixed at 0	GPIO selected Internal input fixed at 0
	GPIO selected									
X	resource selected	Hi-Z	Hi-Z / Internal input fixed at 0	Hi-Z / Internal input fixed at 0	Maintain previous state	Maintain previous state	Hi-Z / Internal input fixed at 0	GPIO selected Internal input fixed at 0	Hi-Z / Internal input fixed at 0	Hi-Z / Internal input fixed at 0
	GPIO selected									
Y	External interrupt enabled selected	Setting disabled	Setting disabled	Setting disabled	Maintain previous state	Maintain previous state	Maintain previous state	GPIO selected Internal input fixed at 0	Hi-Z / Internal input fixed at 0	Hi-Z / Internal input fixed at 0
	Resource other than above selected	Hi-Z	Hi-Z / Internal input fixed at 0	Hi-Z / Internal input fixed at 0			Hi-Z / Internal input fixed at 0			
	GPIO selected									

1: Oscillation is stopped at Sub Timer mode, Low-speed CR Timer mode, RTC mode, Stop mode, Deep Standby RTC mode, and Deep Standby Stop mode.

2: Oscillation is stopped at Stop mode and Deep Standby Stop mode.

12. Electrical Characteristics

12.1 Absolute Maximum Ratings

Parameter	Symbol	Rating		Unit	Remarks
		Min	Max		
Power supply voltage[1],[2]	V_{CC}	V_{SS} - 0.5	V_{SS} + 4.6	V	
Analog power supply voltage[1],[3]	AV_{CC}	V_{SS} - 0.5	V_{SS} + 4.6	V	
Analog reference voltage[1],[3]	AVRH	V_{SS} - 0.5	V_{SS} + 4.6	V	
LCD input voltage [1],[3]	VV0 to VV4	V_{SS} - 0.5	V_{SS} + 4.6	V	
Input voltage[1]	V_I	V_{SS} - 0.5	V_{CC} + 0.5 (≤ 4.6 V)	V	
		V_{SS} - 0.5	V_{SS} + 6.5	V	5 V tolerant
Analog pin input voltage[1]	V_{IA}	V_{SS} - 0.5	AV_{CC} + 0.5 (≤ 4.6 V)	V	
Output voltage[1]	V_O	V_{SS} - 0.5	V_{CC} + 0.5 (≤ 4.6 V)	V	
L level maximum output current[4]	I_{OL}	-	10	mA	
			39	mA	P81/UDP0 , P80/UDM0 pins
L level average output current[5]	I_{OLAV}	-	4	mA	
			10.5	mA	[7]
			27	mA	[8]
L level total maximum output current	$\sum I_{OL}$	-	100	mA	
L level total average output current[6]	$\sum I_{OLAV}$	-	50	mA	
H level maximum output current[4]	I_{OH}	-	- 10	mA	
			39	mA	P81/UDP0 , P80/UDM0 pins
H level average output current[5]	I_{OHAV}	-	- 4	mA	
			12	mA	[7]
			27	mA	[8]
H level total maximum output current	$\sum I_{OH}$	-	- 100	mA	
H level total average output current[6]	$\sum I_{OHAV}$	-	- 50	mA	
Power consumption	P_D	-	300	mW	
Storage temperature	T_{STG}	- 55	+ 150	°C	

1: These parameters are based on the condition that $V_{SS} = AV_{SS} = 0V$.

2: V_{CC} must not drop below V_{SS} - 0.5V.

3: Ensure that the voltage does not to exceed V_{CC} + 0.5 V, for example, when the power is turned on.

4: The maximum output current is defined as the value of the peak current flowing through any one of the corresponding pins.

5: The average output current is defined as the average current value flowing through any one of the corresponding pins for a 100 ms period.

6: The total average output current is defined as the average current value flowing through all of corresponding pins for a 100ms.

7: When P81/UDP0 and P80/UDM0 pins are used as GPIO (P81, P80).

8: Then P81/UDP0 and P80/UDM0 pins are used as USB (UDP0, UDM0).

WARNING:

- *Semiconductor devices may be permanently damaged by application of stress (including, without limitation, voltage, current or temperature) in excess of absolute maximum ratings.Do not exceed any of these ratings.*

12.2 Recommended Operating Conditions

(V_{SS} = AV_{SS} = 0.0V)

Parameter	Symbol	Conditions	Value		Unit	Remarks
			Min	Max		
Power supply voltage	V_{CC}	-	1.65[6]	3.6	V	[1], [4]
			3.0[6]	3.6		[2]
			2.2[6]	3.6		[1], [3]
LCD input voltage	V_{VV4}	-	2.2	V_{CC}	V	
Analog power supply voltage	AV_{CC}	-	1.65	3.6	V	AV_{CC} = V_{CC}
Analog reference voltage	AVRH	-	2.7	AV_{CC}	V	AV_{CC} ≥ 2.7 V
			AV_{CC}	AV_{CC}	V	AV_{CC}< 2.7 V
	AVRL	-	AV_{SS}	AV_{SS}	V	
Smoothing capacitor	C_S	-	1	10	µF	For Regulator[5]
Operating temperature	T_A	-	- 40	+ 85	°C	

1: When P81/UDP0 and P80/UDM0 pins are used as GPIO (P81, P80).

2: When P81/UDP0 and P80/UDM0 pins are used as USB (UDP0, UDM0).

3: When LCD Controller is used.

4: When LCD Controller is not used.

5: See C Pin in Handling Devices for the connection of the smoothing capacitor.

6: In between less than the minimum power supply voltage and low voltage reset/interrupt detection voltage or more, instruction execution and low voltage detection function by built-in High-speed CR(including Main PLL is used) or built-in Low-speed CR is possible to operate only.

WARNING:

- *The recommended operating conditions are required in order to ensure the normal operation of the semiconductor device. All of the device's electrical characteristics are warranted when the device is operated under these conditions. Any use of semiconductor devices will be under their recommended operating condition.*
  Operation under any conditions other than these conditions may adversely affect reliability of device and could result in device failure. No warranty is made with respect to any use, operating conditions or combinations not represented on this data sheet. If you are considering application under any conditions other than listed herein, please contact sales representatives beforehand.

12.3 DC Characteristics

12.3.1 *Current rating*

(V_{CC} = AV_{CC} = 1.65V to 3.6V, V_{SS} = AV_{SS} = 0V, T_A = - 40°C to + 85°C)

Parameter	Symbol	Pin name	Conditions		Value		Unit	Remarks
					Typ[3]	Max[4]		
Power supply current	I_{CC}	VCC	PLL Rrun mode	CPU: 40 MHz, Peripheral: 40 MHz	15.5	21	mA	[1], [5]
				CPU: 40 MHz, Peripheral: the clock stops NOP operation	8.7	12	mA	[1], [5]
			High-speed CR Rrun mode	CPU/ Peripheral: 4 MHz[2]	1.8	2.9	mA	[1]
			Sub Rrun mode	CPU/ Peripheral: 32 kHz	110	680	µA	[1], [6]
			Low-speed CR Run mode	CPU/ Peripheral: 100 kHz	125	700	µA	[1]
	I_{CCS}		PLL Sleep mode	Peripheral: 40 MHz	9	12.5	mA	[1], [5]
			High-speed CR Sleep mode	Peripheral: 4 MHz[2]	0.8	1.6	mA	[1]
			Sub Sleep mode	Peripheral: 32 kHz	96	670	µA	[1], [6]
			Low-speed CR Sleep mode	Peripheral: 100 kHz	110	680	µA	[1]

1: When all ports are fixed.

2: When setting it to 4 MHz by trimming.

3: T_A=+25°C, V_{CC}=3.6 V

4: T_A=+85°C, V_{CC}=3.6 V

5: When using the crystal oscillator of 4 MHz (Including the current consumption of the oscillation circuit)

6: When using the crystal oscillator of 32 kHz (Including the current consumption of the oscillation circuit)

Parameter	Symbol	Pin name	Conditions		Value		Unit	Remarks
					Typ[2]	Max[2]		
Power supply current	I_{CCT}	VCC	Main Timer mode	T_A = + 25°C, When LVD is off	2.1	2.5	mA	[1], [3]
				T_A = + 85°C, When LVD is off	-	3.4	mA	[1], [3]
			Sub Timer mode	T_A = + 25°C, When LVD is off	12	35	µA	[1], [4]
				T_A = + 85°C, When LVD is off	-	330	µA	[1], [4]
	I_{CCR}		RTC mode	T_A = + 25°C, When LVD is off	9.8	29	µA	[1], [4]
				T_A = + 85°C, When LVD is off	-	280	µA	[1], [4]
	I_{CCH}		Stop mode	T_A = + 25°C, When LVD is off	9	28	µA	[1]
				T_A = + 85°C, When LVD is off	-	270	µA	[1]
	I_{CCHD}		Deep Standby Stop mode	T_A = + 25°C, When LVD is off, When RAM is off	1.25	7	µA	[1], [4], [5]
				T_A = + 25°C, When LVD is off, When RAM is on	5.3	18	µA	[1], [4], [5]
				T_A = + 85°C, When LVD is off, When RAM is off	-	70	µA	[1], [4], [5]
				T_A = + 85°C, When LVD is off, When RAM is on		100	µA	[1], [4], [5]
	I_{CCRD}		Deep Standby RTC mode	T_A = + 25°C, When LVD is off, When RAM is off	1.9	9	µA	[1], [5]
				T_A = + 25°C, When LVD is off, When RAM is on	5.9	20	µA	[1], [5]
				T_A = + 85°C, When LVD is off, When RAM is off	-	75	µA	[1], [5]
				T_A = + 85°C, When LVD is off, When RAM is on		105	µA	[1], [5]

1: When all ports are fixed.

2: V_{CC}=3.6 V

3: When using the crystal oscillator of 4 MHz (Including the current consumption of the oscillation circuit)

4: When using the crystal oscillator of 32 kHz (Including the current consumption of the oscillation circuit)

5: RAM on/off setting is on-chip SRAM only.

Low-Voltage Detection Current

(V_{CC} = 1.65V to 3.6V, V_{DDI} = 1.1V to 1.3V, V_{SS} = 0V, T_A = - 40°C to + 85°C)

Parameter	Symbol	Pin name	Conditions	Value		Unit	Remarks
				Typ	Max		
Low-voltage detection circuit (LVD) power supply current	I_{CCLVD}	VCC	At operation for reset V_{CC} = 3.6 V	0.13	0.3	µA	At not detect
			At operation for interrupt V_{CC} = 3.6 V	0.13	0.3	µA	At not detect

Flash Memory Current

(V_{CC} = 1.65V to 3.6V, V_{DDI} = 1.1V to 1.3V, V_{SS} = 0V, T_A = - 40°C to + 85°C)

Parameter	Symbol	Pin name	Conditions	Value		Unit	Remarks
				Typ	Max		
Flash memory write/erase current	$I_{CCFLASH}$	VCC	At Write/Erase	9.5	11.2	mA	*

: The current at which to write or erase Flash memory, $I_{CCFLASH}$ is added to I_{CC}.

A/D Converter Current

(V_{CC} = V_{CC28} = AV_{CC} = 1.65V to 3.6V, V_{DDI} = 1.1V to 1.3V, V_{SS} = AV_{SS} = 0V, T_A = - 40°C to +85°C)

Parameter	Symbol	Pin name	Conditions	Value		Unit	Remarks
				Typ	Max		
Power supply current	I_{CCAD}	AVCC	At 1unit operation	0.27	0.42	mA	
			At stop	0.03	10	µA	
Reference power supply current	I_{CCAVRH}	AVRH	At 1unit operation AVRH=3.6 V	0.72	1.29	mA	
			At stop	0.02	2.6	µA	

12.3.2 *Pin Characteristics*

(V_{CC} = AV_{CC} = 1.65V to 3.6V, V_{SS} = AV_{SS} = 0V, T_A = - 40°C to + 85°C)

Parameter	Symbol	Pin name	Conditions	Value			Unit	Remarks
				Min	Typ	Max		
H level input voltage (hysteresis input)	V_{IHS}	CMOS hysteresis input pin, MD0, MD1	V_{CC} ≥ 2.7 V	V_{CC} × 0.8	-	V_{CC} + 0.3	V	
			V_{CC} < 2.7 V	V_{CC} × 0.7				
		5V tolerant input pin	V_{CC} ≥ 2.7 V	V_{CC} × 0.8	-	V_{SS} + 5.5	V	
			V_{CC} < 2.7 V	V_{CC} × 0.7				
L level input voltage (hysteresis input)	V_{ILS}	CMOS hysteresis input pin, MD0, MD1	V_{CC} ≥ 2.7 V	V_{SS} - 0.3	-	V_{CC} × 0.2	V	
			V_{CC} < 2.7 V			V_{CC} × 0.3		
		5V tolerant input pin	V_{CC} ≥ 2.7 V	V_{SS} - 0.3	-	V_{CC} × 0.2	V	
			V_{CC} < 2.7 V			V_{CC} × 0.3		
H level output voltage	V_{OH}	4mA type	V_{CC} ≥ 2.7 V, I_{OH} = - 4 mA	V_{CC} - 0.5	-	V_{CC}	V	
			V_{CC} < 2.7 V, I_{OH} = - 2 mA	V_{CC} - 0.45				
		The pin doubled as USB I/O	V_{CC} ≥ 2.7 V, I_{OH} = - 12 mA	V_{CC} - 0.4	-	V_{CC}	V	
			V_{CC} < 2.7 V, I_{OH} = - 6.5 mA					
L level output voltage	V_{OL}	4mA type	V_{CC} ≥ 2.7 V, I_{OL} = 4 mA	V_{SS}	-	0.4	V	
			V_{CC} < 2.7 V, I_{OL} = 2 mA					
		The pin doubled as USB I/O	V_{CC} ≥ 2.7 V, I_{OL} = 10.5 mA	V_{SS}	-	0.4	V	
			V_{CC} < 2.7 V, I_{OL} = 5 mA					
Input leak current	I_{IL}	-	-	- 5	-	+ 5	μA	
		CEC0, CEC1	V_{CC} = AV_{CC} = AVRH = V_{SS} = AV_{SS} = 0.0 V	-	-	+1.8	μA	
Pull-up resistor value	R_{PU}	Pull-up pin	V_{CC} ≥ 2.7 V	21	33	66	kΩ	
			V_{CC} < 2.7 V	-	-	134		
Input capacitance	C_{IN}	Other than VCC, VSS, AVCC, AVSS, AVRH	-	-	5	15	pF	

12.4 LCD Characteristics

(V_{CC} = 2.2V to 3.6V, V_{SS} = 0V, T_A = - 40°C to + 85°C)

Parameter	Symbol	Pin name	Conditions	Value			Unit	Remarks
				Min	Typ	Max		
VV0 to VV3 Output voltage (1/4 bias)	V_{VV0}	VV0	When using internal dividing resistor	0	-	V_{VV4} × 5%	V	
	V_{VV1}	VV1		V_{VV4} × 1/4-10%	-	V_{VV4} × 1/4+10%		
	V_{VV2}	VV2		V_{VV4} × 1/2-10%	-	V_{VV4} × 1/2+10%		
	V_{VV3}	VV3		V_{VV4} × 3/4-10%	-	V_{VV4} × 3/4+10%		
VV0 to VV3 Output voltage (1/3 bias)	V_{VV0}	VV0	When using internal dividing resistor	0	-	V_{VV4} × 5%	V	
	V_{VV1}	VV1		V_{VV4} × 1/3-10%	-	V_{VV4} × 1/3+10%		
	V_{VV2}	VV2		V_{VV4} × 2/3 -10%	-	V_{VV4} × 2/3+10%		
	V_{VV3}	VV3		V_{VV4} × 2/3-10%	-	V_{VV4} × 2/3+10%		
VV0 to VV3 Output voltage (1/2 bias)	V_{VV0}	VV0	When using internal dividing resistor	0	-	V_{VV4} × 5%	V	
	V_{VV1}	VV1		V_{VV4} × 1/2-10%	-	V_{VV4} × 1/2+10%		
	V_{VV2}	VV2		V_{VV4} × 1/2-10%	-	V_{VV4} × 1/2+10%		
	V_{VV3}	VV3		V_{VV4} × 1/2-10%	-	V_{VV4} × 1/2+10%		
VV4 Active current (1/4 bias)	I_{R100K}	VV4	When using 100 kΩ internal dividing resistor	-	10	20	µA	
	I_{R10K}	VV4	When using 10 kΩ internal dividing resistor	-	100	160	µA	
VV4 Active current (1/3 bias)	I_{R100K}	VV4	When using 100 kΩ internal dividing resistor	-	12	30	µA	
	I_{R10K}	VV4	When using 10 kΩ internal dividing resistor	-	120	180	µA	
VV4 Active current (1/2 bias)	I_{R100K}	VV4	When using 100 kΩ internal dividing resistor	-	18	40	µA	
	I_{R10K}	VV4	When using 10 kΩ internal dividing resistor	-	180	270	µA	
VV4 Static current	I_{OFF_VV4}	VV4	When LCD stops	-	0.5	1.5	µA	
VV0 Output Voltage in using external resistor	V_{VV0E}	VV0	I_{OL}=1 mA	-	-	0.66	V	

12.5 AC Characteristics

12.5.1 *Main Clock Input Characteristics*

(V_{CC} = 1.65V to 3.6V, V_{SS} = 0V, T_A = - 40°C to + 85°C)

Parameter	Symbol	Pin name	Conditions	Value		Unit	Remarks
				Min	Max		
Input frequency	f_{CH}	X0, X1	V_{CC} ≥ 2.7 V	4	48	MHz	When crystal oscillator is connected
			V_{CC} < 2.7 V	4	20		
			-	4	48	MHz	When using external clock
Input clock cycle	t_{CYLH}		-	20.83	250	ns	When using external clock
Input clock pulse width	-		PWH/tCYLH, PWL/tCYLH	45	55	%	When using external clock
Input clock rising time and falling time	t_{CF}, t_{CR}		-	-	5	ns	When using external clock
Internal operating Clock[1] frequency	f_{CM}	-	-	-	40	MHz	Master clock
	f_{CC}	-	-	-	40	MHz	Base clock (HCLK/FCLK)
	f_{CP0}	-	-	-	40	MHz	APB0 bus clock[2]
	f_{CP1}	-	-	-	40	MHz	APB1 bus clock[2]
	f_{CP2}	-	-	-	40	MHz	APB2 bus clock[2]
Internal operating clock[1] cycle time	t_{CYCC}	-	-	25	-	ns	Base clock (HCLK/FCLK)
	t_{CYCP0}	-	-	25	-	ns	APB0 bus clock[2]
	t_{CYCP1}	-	-	25	-	ns	APB1 bus clock[2]
	t_{CYCP2}	-	-	25	-	ns	APB2 bus clock[2]

1: For more information about each internal operating clock, see Chapter 2-1: Clock in FM3 Family Peripheral Manual.

2: For about each APB bus which each peripheral is connected to, see Block Diagram in this datasheet.

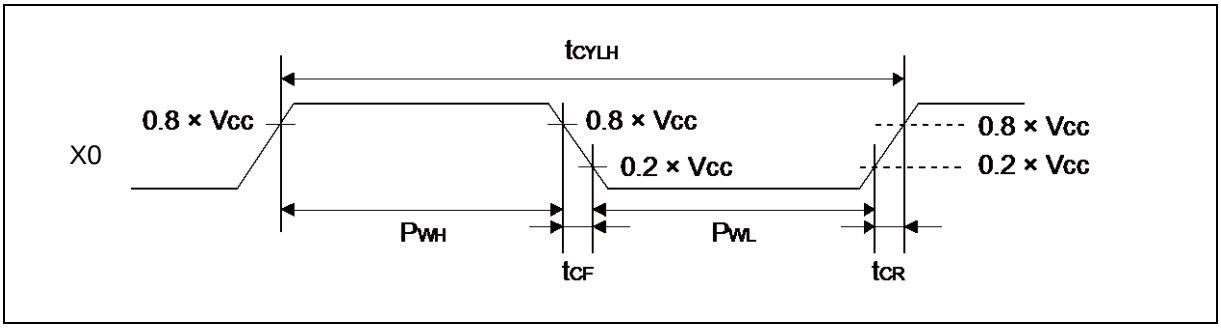

12.5.2 *Sub Clock Input Characteristics*

(V_{CC} = 1.65V to 3.6V, V_{SS} = 0V, T_A = - 40°C to + 85°C)

Parameter	Symbol	Pin name	Conditions	Value			Unit	Remarks
				Min	Typ	Max		
Input frequency	f_{CL}	X0A, X1A	-	-	32.768	-	kHz	When crystal oscillator is connected
			-	32	-	100	kHz	When using external clock
Input clock cycle	t_{CYLL}		-	10	-	31.25	µs	When using external clock
Input clock pulse width	-		PWH/tCYLL, PWL/tCYLL	45	-	55	%	When using external clock

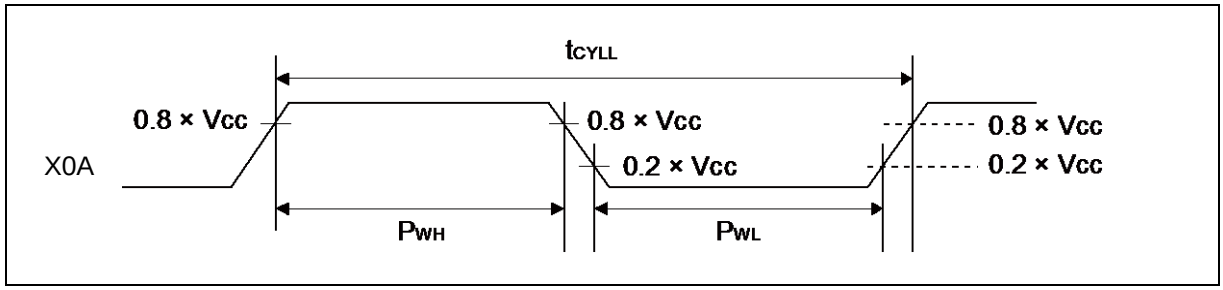

12.5.3 *Built-in CR Oscillation Characteristics*

Built-in High-speed CR

(V_{CC} = 1.65V to 3.6V, V_{SS} = 0V, T_A = - 40°C to + 85°C)

Parameter	Symbol	Conditions	Value			Unit	Remarks
			Min	Typ	Max		
Clock frequency	f_{CRH}	T_A = + 25°C V_{CC} ≥ 2.7 V	3.96	4	4.04	MHz	When trimming[1]
		T_A = + 25°C V_{CC} < 2.7 V	3.9	4	4.1		
		T_A = - 40°C to + 85°C	3.84	4	4.16		
		T_A = - 40°C to + 85°C	2.8	-	5.2		When not trimming
Frequency stabilization time	t_{CRWT}	-	-	-	30	µs	[2]

1: In the case of using the values in CR trimming area of Flash memory at shipment for frequency/temperature trimming.

2: This is the time to stabilize the frequency of High-speed CR clock after setting trimming value.
This period is able to use High-speed CR clock as source clock.

Built-in Low-speed CR

(V_{CC} = 1.65V to 3.6V, V_{SS} = 0V, T_A = - 40°C to + 85°C)

Parameter	Symbol	Conditions	Value			Unit	Remarks
			Min	Typ	Max		
Clock frequency	f_{CRL}	-	50	100	150	kHz	

12.5.4 *Operating Conditions of Main and USB PLL*

Operating Conditions of Main and USB PLL (In the case of using main clock for input of PLL)

(V_{CC} = 1.65V to 3.6V, V_{SS} = 0V, T_A = - 40°C to + 85°C)

Parameter	Symbol	Value			Unit	Remarks
		Min	Typ	Max		
PLL oscillation stabilization wait time[1] (LOCK UP time)	t_{LOCK}	100	-	-	µs	
PLL input clock frequency	f_{PLLI}	4	-	16	MHz	
PLL multiple rate	-	5	-	37	multiple	
PLL macro oscillation clock frequency	f_{PLLO}	75	-	150	MHz	
Main PLL clock frequency[2]	f_{CLKPLL}	-	-	40	MHz	
USB clock frequency[3]	$f_{CLKSPLL}$	-	-	48	MHz	After the M frequency division

1: Time from when the PLL starts operating until the oscillation stabilizes.

2: For more information about Main PLL clock (CLKPLL), see Chapter 2-1: Clock in FM3 Family Peripheral Manual.

3: For more information about USB clock, see Chapter 2-2: USB Clock Generation in FM3 Family Peripheral Manual Communication Macro Part.

Operating Conditions of Main PLL (In the case of using the built-in High-speed CR for the input clock of the Main PLL)

(V_{CC} = 1.65V to 3.6V, V_{SS} = 0V, T_A = - 40°C to + 85°C)

Parameter	Symbol	Value			Unit	Remarks
		Min	Typ	Max		
PLL oscillation stabilization wait time[1] (LOCK UP time)	t_{LOCK}	100	-	-	µs	
PLL input clock frequency	f_{PLLI}	3.8	4	4.2	MHz	
PLL multiple rate	-	19	-	35	multiple	
PLL macro oscillation clock frequency	f_{PLLO}	72	-	150	MHz	
Main PLL clock frequency[2]	f_{CLKPLL}	-	-	40	MHz	

1: Time from when the PLL starts operating until the oscillation stabilizes.

2: For more information about Main PLL clock (CLKPLL), see Chapter 2-1: Clock in FM3 Family Peripheral Manual.

Note:

- *Make sure to input to the Main PLL source clock, the High-speed CR clock (CLKHC) that the frequency/temperature has been trimmed. When setting PLL multiple rate, please take the accuracy of the built-in High-speed CR clock into account and prevent the master clock from exceeding the maximum frequency.*

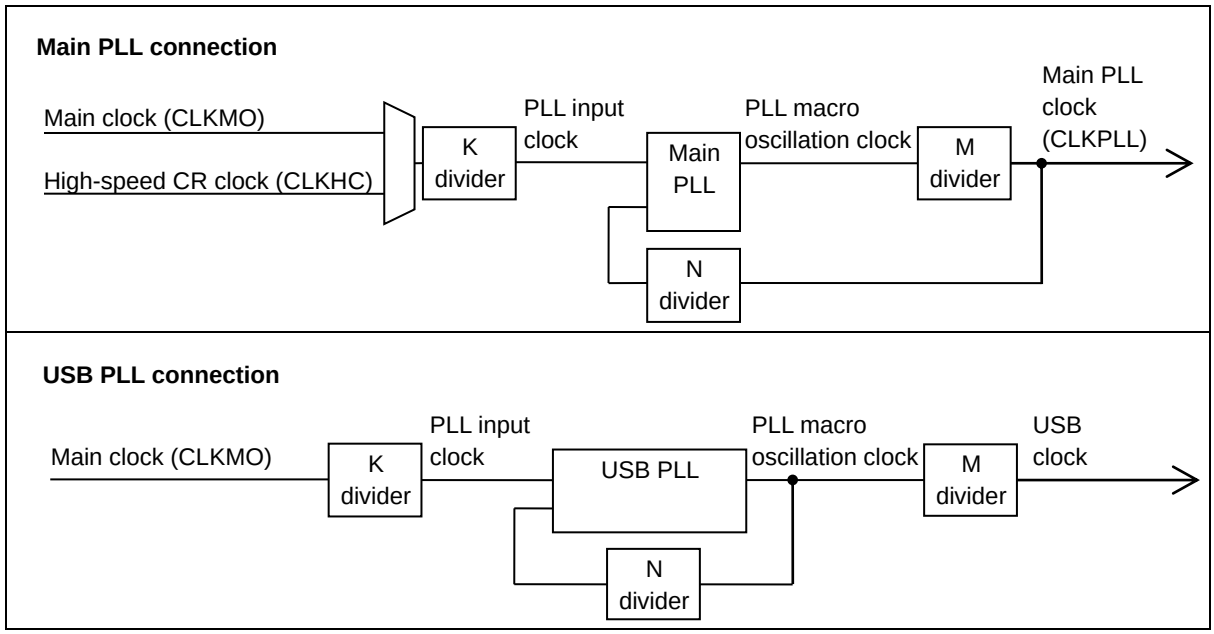

12.5.5 *Reset Input Characteristics*

(V_{CC} = 1.65V to 3.6V, V_{SS} = 0V, T_A = - 40°C to + 85°C)

Parameter	Symbol	Pin name	Conditions	Value		Unit	Remarks
				Min	Max		
Reset input time	t_{INITX}	INITX	-	500	-	ns	

12.5.6 *Power-on Reset Timing*

(V_{SS} = 0V, T_A = - 40°C to + 85°C)

Parameter	Symbol	Pin name	Conditions	Value			Unit	Remarks
				Min	Typ	Max		
Power supply shut down time	t_{OFF}	VCC	-	1	-	-	ms	*1
Power ramp rate	dV/dt		Vcc:0.2 V to 1.65 V	0.2	-	1000	mV/µs	*2
Time until releasing Power-on reset	t_{PRT}		-	1.34	-	16.09	ms	

*1: V_{CC} must be held below 0.2 V for minimum period of t_{OFF}. Improper initialization may occur if this condition is not met.
*2: This dV/dt characteristic is applied at the power-on of cold start (t_{OFF}>1 ms).

Note:

– *If t_{OFF} cannot be satisfied designs must assert external reset(INITX) at power-up and at any brownout event per "13. 5. 5.Reset Input Characteristics".*

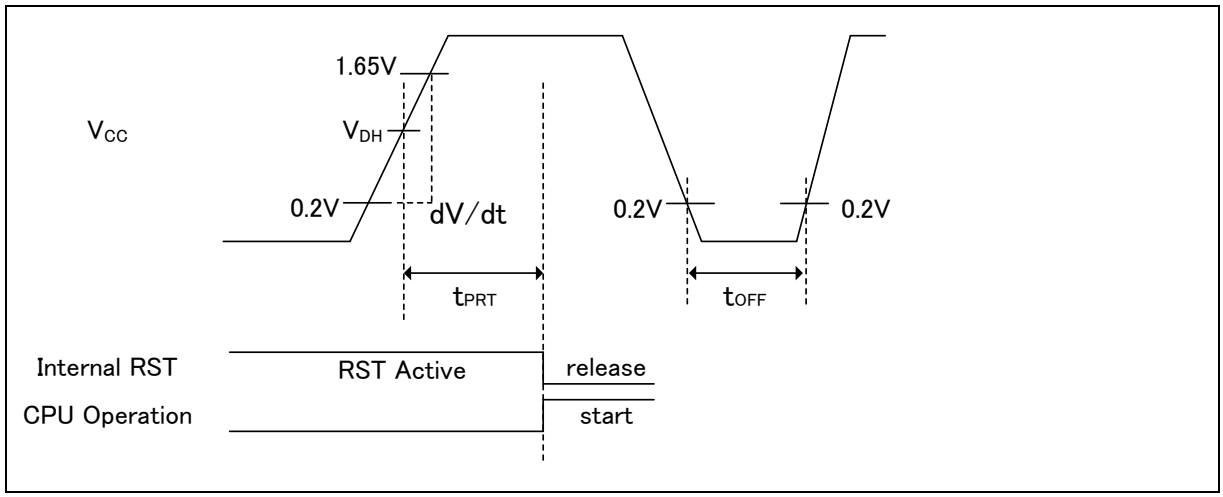

Glossary

■ VDH: detection voltage of Low Voltage detection reset. See "12.8 Low-Voltage Detection Characteristics"

12.5.7 *External Bus Timing*

External bus clock output characteristics

(V_{CC} = 1.65V to 3.6V, V_{SS} = 0V, T_A = - 40°C to + 85°C)

Parameter	Symbol	Pin name	Conditions	Value		Unit
				Min	Max	
Output frequency	t_{CYCLE}	MCLKOUT*	$V_{CC} \geq 2.7$ V	-	40	MHz
			$V_{CC} < 2.7$ V	-	20	MHz

*: *The external bus clock output (MCLKOUT) is a divided clock of HCLK.*
For more information about setting of clock divider, see Chapter 12: External Bus Interface in FM3 Family Peripheral Manual.
When external bus clock is not output, this characteristic does not give any effect on external bus operation.

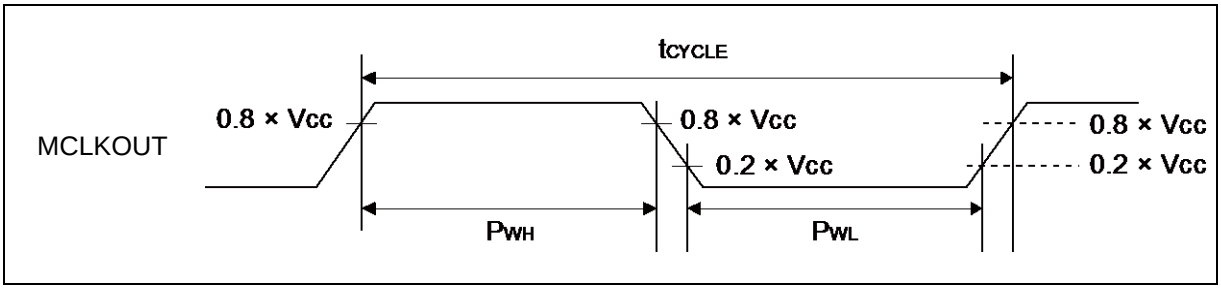

External bus signal input/output characteristics

(V_{CC} = 1.65V to 3.6V, V_{SS} = 0V, T_A = - 40°C to + 85°C)

Parameter	Symbol	Conditions	Value	Unit	Remarks
Signal input characteristics	V_{IH}	-	0.8 × V_{CC}	V	
	V_{IL}		0.2 × V_{CC}	V	
Signal output characteristics	V_{OH}		0.8 × V_{CC}	V	
	V_{OL}		0.2 × V_{CC}	V	

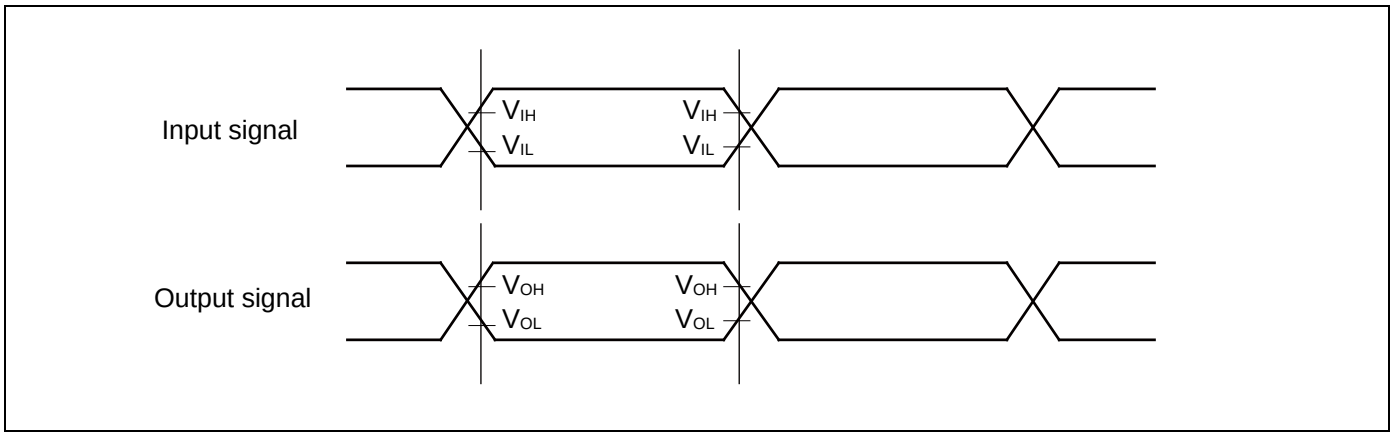

Separate Bus Access Asynchronous SRAM Mode

(V_{CC} = 1.65V to 3.6V, V_{SS} = 0V, T_A = - 40°C to + 85°C)

Parameter	Symbol	Pin name	Conditions	Value		Unit
				Min	Max	
MOEX Min pulse width	t_{OEW}	MOEX	V_{CC} ≥ 2.7 V	MCLK×n-3	-	ns
			V_{CC} < 2.7 V			
MCSX ↓ → Address output delay time	t_{CSL-AV}	MCSX[7:0], MAD[24:0]	V_{CC} ≥ 2.7 V	-9	+9	ns
			V_{CC} < 2.7 V	-12	+12	
MOEX ↑ → Address hold time	t_{OEH-AX}	MOEX, MAD[24:0]	V_{CC} ≥ 2.7 V	0	MCLK×m+9	ns
			V_{CC} < 2.7 V		MCLK×m+12	
MCSX ↓ → MOEX ↓ delay time	$t_{CSL-OEL}$	MOEX, MCSX[7:0]	V_{CC} ≥ 2.7 V	MCLK×m-9	MCLK×m+9	ns
			V_{CC} < 2.7 V	MCLK×m-12	MCLK×m+12	
MOEX ↑ → MCSX ↑ time	$t_{OEH-CSH}$		V_{CC} ≥ 2.7 V	0	MCLK×m+9	ns
			V_{CC} < 2.7 V		MCLK×m+12	
MCSX ↓ → MDQM ↓ delay time	$t_{CSL-RDQML}$	MCSX, MDQM[1:0]	V_{CC} ≥ 2.7 V	MCLK×m-9	MCLK×m+9	ns
			V_{CC} < 2.7 V	MCLK×m-12	MCLK×m+12	
Data set up → MOEX ↑ time	t_{DS-OE}	MOEX, MADATA[15:0]	V_{CC} ≥ 2.7 V	30	-	ns
			V_{CC} < 2.7 V	38	-	
MOEX ↑ →Data hold time	t_{DH-OE}	MOEX, MADATA[15:0]	V_{CC} ≥ 2.7 V	0	-	ns
			V_{CC} < 2.7 V			
MWEX Min pulse width	t_{WEW}	MWEX	V_{CC} ≥ 2.7 V	MCLK×n-3	-	ns
			V_{CC} < 2.7 V			
MWEX ↑ → Address output delay time	t_{WEH-AX}	MWEX, MAD[24:0]	V_{CC} ≥ 2.7 V	0	MCLK×m+9	ns
			V_{CC} < 2.7 V		MCLK×m+12	
MCSX ↓ → MWEX ↓ delay time	$t_{CSL-WEL}$	MWEX, MCSX[7:0]	V_{CC} ≥ 2.7 V	MCLK×n-9	MCLK×n+9	ns
			V_{CC} < 2.7 V	MCLK×n-12	MCLK×n+12	
MWEX ↑ → MCSX ↑ delay time	$t_{WEH-CSH}$		V_{CC} ≥ 2.7 V	0	MCLK×m+9	ns
			V_{CC} < 2.7 V		MCLK×m+12	
MCSX ↓→ MDQM ↓ delay time	$t_{CSL-WDQML}$	MCSX, MDQM[1:0]	V_{CC} ≥ 2.7 V	MCLK×n-9	MCLK×n+9	ns
			V_{CC} < 2.7 V	MCLK×n-12	MCLK×n+12	
MWEX ↓→ Data output time	t_{CSL-DV}	MCSX, MADATA[15:0]	V_{CC} ≥ 2.7 V	MCLK-9	MCLK+9	ns
			V_{CC} < 2.7 V	MCLK-12	MCLK+12	
MWEX ↑ → Data hold time	t_{WEH-DX}	MWEX, MADATA[15:0]	V_{CC} ≥ 2.7 V	0	MCLK×m+9	ns
			V_{CC} < 2.7 V		MCLK×m+12	

Note:

- *When the external load capacitance C_L = 30 pF (m = 0 to 15, n = 1 to 16).*

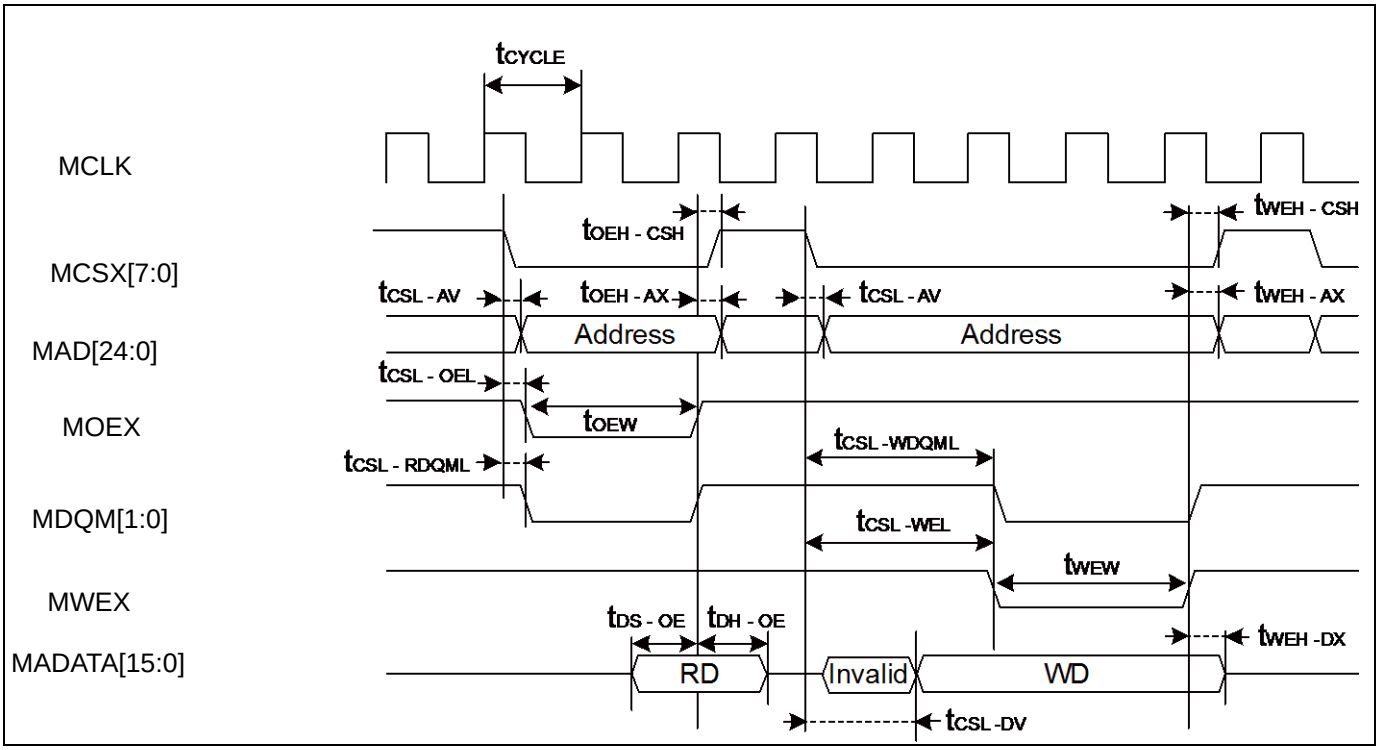
tCYCLE
MCLK
MCSX[7:0]
MAD[24:0]
MOEX
MDQM[1:0]
MWEX
MADATA[15:0]
tOEH - CSH
tWEH - CSH
tCSL - AV
tOEH - AX
tCSL - AV
tWEH - AX
Address
Address
tCSL - OEL
tOEW
tCSL - RDQML
tCSL -WDQML
tCSL -WEL
tWEW
tDS - OE
tDH - OE
tWEH -DX
RD
Invalid
WD
tCSL -DV

Separate Bus Access Synchronous SRAM Mode

(V_{CC} = 1.65V to 3.6V, V_{SS} = 0V, T_A = - 40°C to + 85°C)

Parameter	Symbol	Pin name	Conditions	Value		Unit
				Min	Max	
Address delay time	t_{AV}	MCLK, MAD[24:0]	V_{CC} ≥ 2.7 V	1	12	ns
			V_{CC} < 2.7 V		13	
MCSX delay time	t_{CSL}	MCLK, MCSX[7:0]	V_{CC} ≥ 2.7 V	1	12	ns
			V_{CC} < 2.7 V			
	t_{CSH}		V_{CC} ≥ 2.7 V	1	12	ns
			V_{CC} < 2.7 V			
MOEX delay time	t_{REL}	MCLK, MOEX	V_{CC} ≥ 2.7 V	1	9	ns
			V_{CC} < 2.7 V		12	
	t_{REH}		V_{CC} ≥ 2.7 V	1	9	ns
			V_{CC} < 2.7 V		12	
Data set up → MCLK ↑ time	t_{DS}	MCLK, MADATA[15:0]	V_{CC} ≥ 2.7 V	24	-	ns
			V_{CC} < 2.7 V	37		
MCLK ↑ → Data hold time	t_{DH}	MCLK, MADATA[15:0]	V_{CC} ≥ 2.7 V	0	-	ns
			V_{CC} < 2.7 V			
MWEX delay time	t_{WEL}	MCLK, MWEX	V_{CC} ≥ 2.7 V	1	9	ns
			V_{CC} < 2.7 V		12	
	t_{WEH}		V_{CC} ≥ 2.7 V	1	9	ns
			V_{CC} < 2.7 V		12	
MDQM[1:0] delay time	t_{DQML}	MCLK, MDQM[1:0]	V_{CC} ≥ 2.7 V	1	9	ns
			V_{CC} < 2.7 V		12	
	t_{DQMH}		V_{CC} ≥ 2.7 V	1	9	ns
			V_{CC} < 2.7 V		12	
MCLK ↑ → Data output time	t_{ODS}	MCLK, MADATA[15:0]	V_{CC} ≥ 2.7 V	MCLK + 1	MCLK + 18	ns
			V_{CC}<2.7 V		MCLK + 24	
MCLK ↑ → Data hold time	t_{OD}	MCLK, MADATA[15:0]	V_{CC} ≥ 2.7 V	1	18	ns
			V_{CC}<2.7 V		24	

Note:

- *When the external load capacitance C_L = 30 pF.*

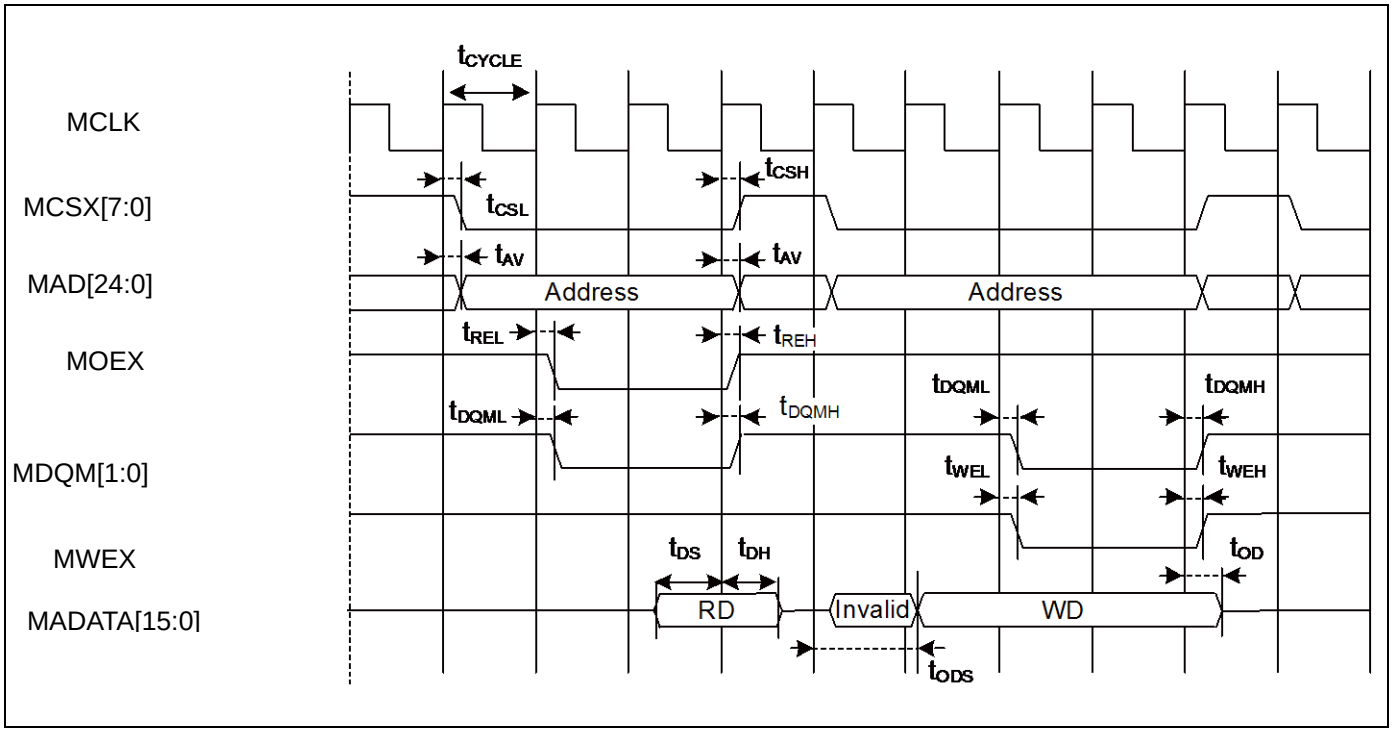

Multiplexed Bus Access Asynchronous SRAM Mode

(V_{CC} = 1.65V to 3.6V, V_{SS} = 0V, T_A = - 40°C to + 85°C)

Parameter	Symbol	Pin name	Conditions	Value		Unit
				Min	Max	
Multiplexed address delay time	$t_{ALE-CHMADV}$	MALE, MADATA[15:0]	V_{CC} ≥ 2.7 V	-2	+10	ns
			V_{CC} < 2.7 V		+20	
Multiplexed address hold time	t_{CHMADH}		V_{CC} ≥ 2.7 V	MCLK×n+0	MCLK×n+10	ns
			V_{CC} < 2.7 V	MCLK×n+0	MCLK×n+20	

Note:

– *When the external load capacitance C_L = 30 pF (m = 0 to 15, n = 1 to 16).*

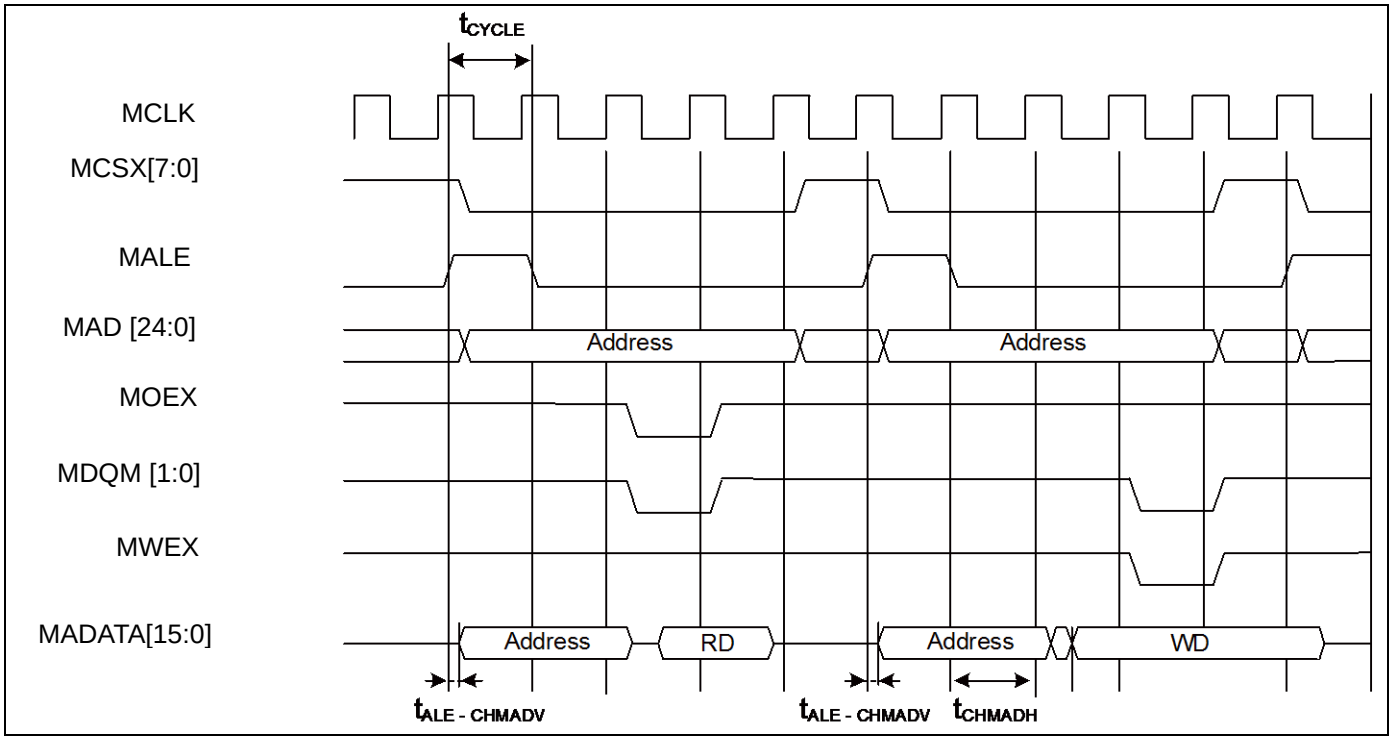

Multiplexed Bus Access Synchronous SRAM Mode

(V_{CC} = 1.65V to 3.6V, V_{SS} = 0V, T_A = - 40°C to + 85°C)

Parameter	Symbol	Pin name	Conditions	Value		Unit	Remarks
				Min	Max		
MALE delay time	t_{CHAL}	MCLK, ALE	V_{CC} ≥ 2.7 V	1	9	ns	
			V_{CC} < 2.7 V		12	ns	
	t_{CHAH}		V_{CC} ≥ 2.7 V	1	9	ns	
			V_{CC} < 2.7 V		12	ns	
MCLK ↑ → Multiplexed Address delay time	t_{CHMADV}	MCLK, MADATA[15:0]	V_{CC} ≥ 2.7 V	1	t_{OD}	ns	
			V_{CC} < 2.7 V				
MCLK ↑ → Multiplexed Data output time	t_{CHMADX}		V_{CC} ≥ 2.7 V	1	t_{OD}	ns	
			V_{CC} < 2.7 V				

Note:

- *When the external load capacitance C_L = 30 pF.*

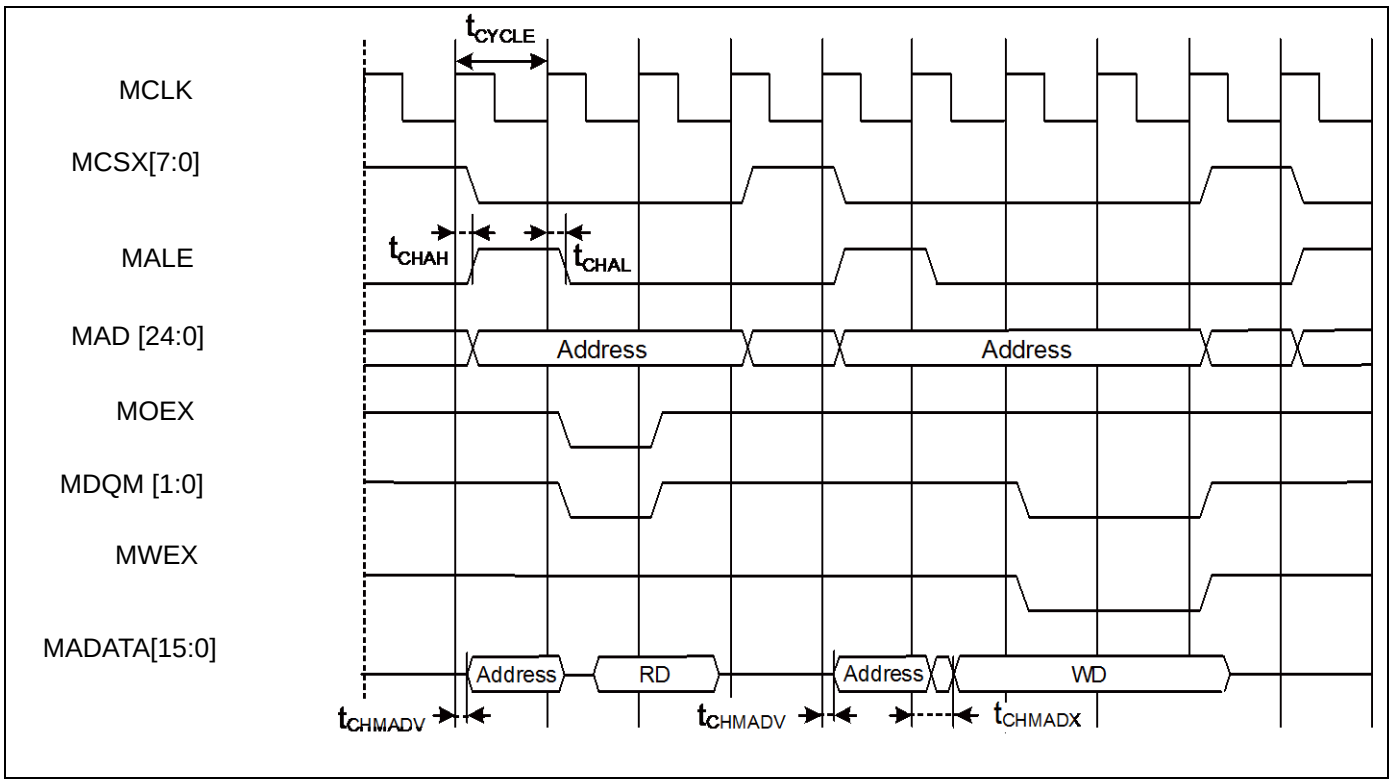

External Ready Input Timing

(V_{CC} = 1.65V to 3.6V, V_{SS} = 0V, T_A = - 40°C to + 85°C)

Parameter	Symbol	Pin name	Conditions	Value		Unit	Remarks
				Min	Max		
MCLK ↑ MRDY input setup time	t_{RDYI}	MCLK, MRDY	V_{CC} ≥ 2.7 V	23	-	ns	
			V_{CC} < 2.7 V	37			

When RDY is input

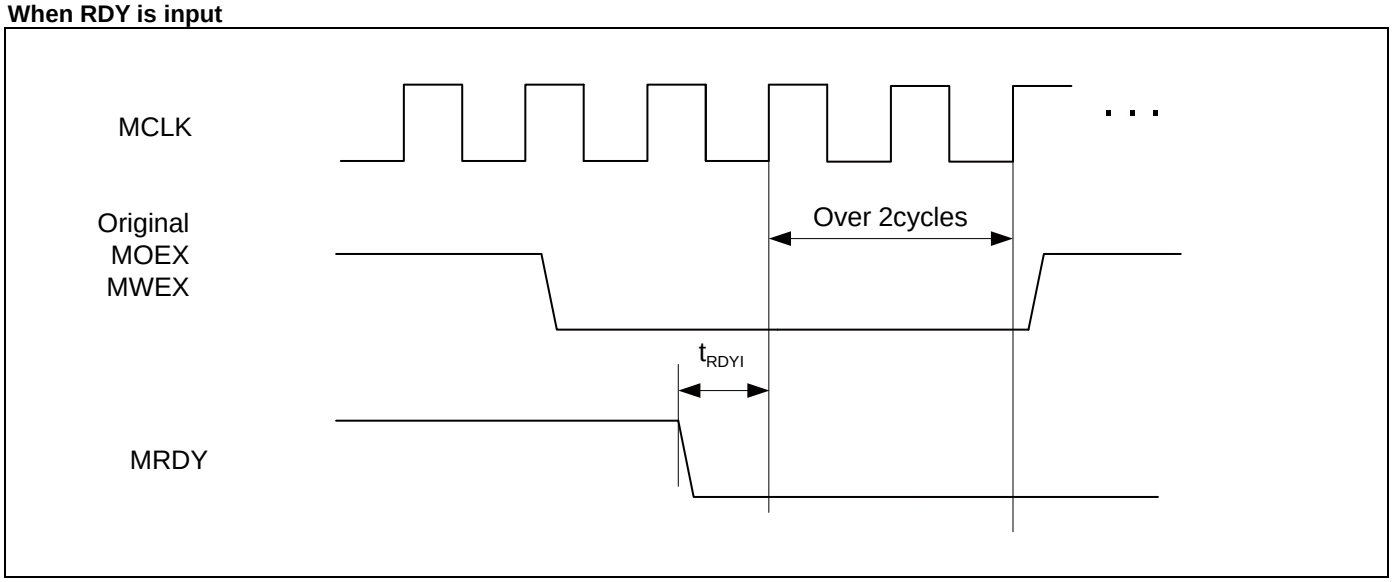

When RDY is released

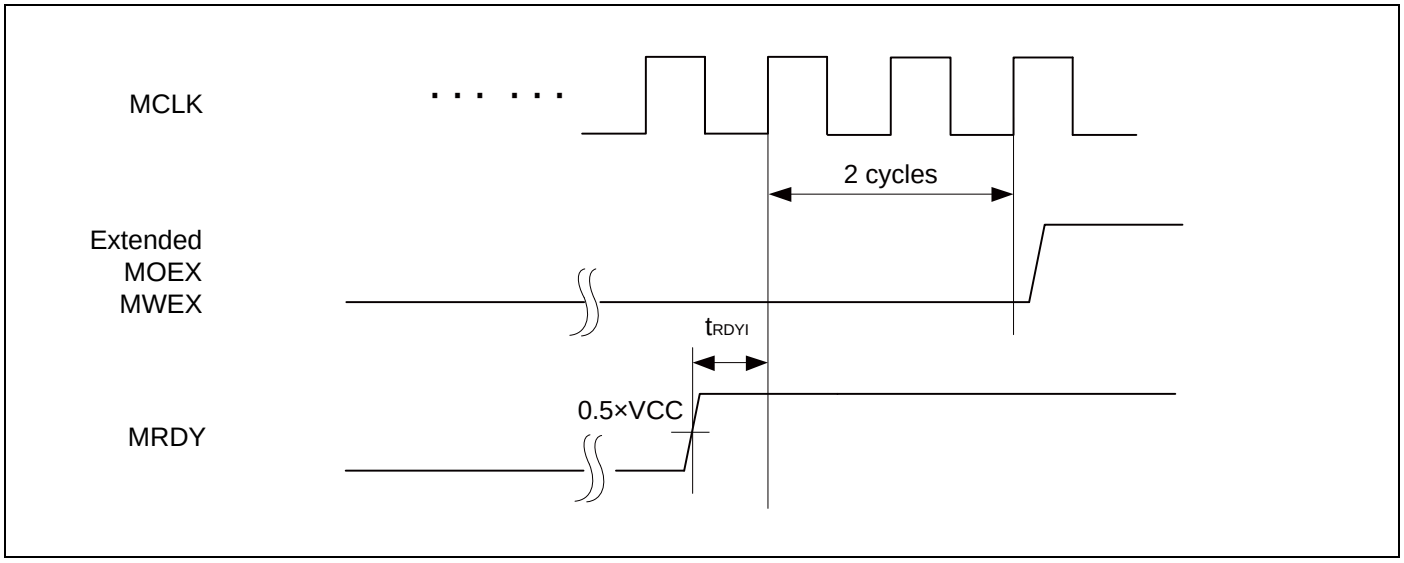

12.5.8 *Base Timer Input Timing*

Timer input timing

(V_{CC} = 1.65V to 3.6V, V_{SS} = 0V, T_A = - 40°C to + 85°C)

Parameter	Symbol	Pin name	Conditions	Value		Unit	Remarks
				Min	Max		
Input pulse width	t_{TIWH}, t_{TIWL}	TIOAn/TIOBn (when using as ECK, TIN)	-	$2t_{CYCP}$	-	ns	

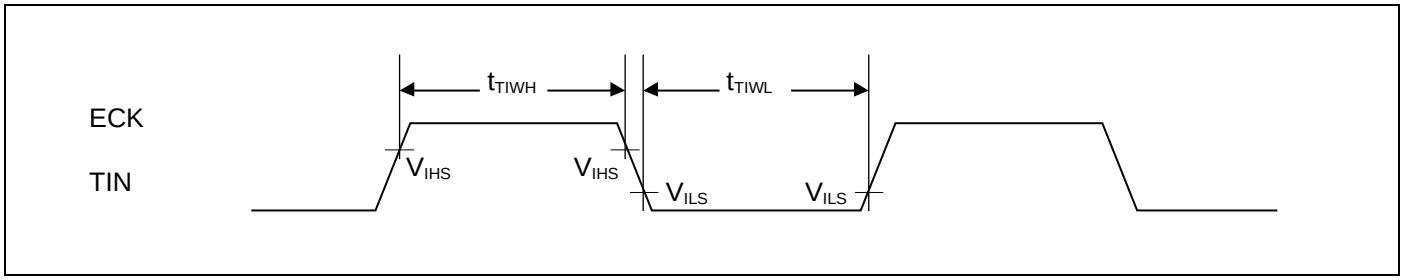

Trigger input timing

(V_{CC} = 1.65V to 3.6V, V_{SS} = 0V, T_A = - 40°C to + 85°C)

Parameter	Symbol	Pin name	Conditions	Value		Unit	Remarks
				Min	Max		
Input pulse width	t_{TRGH}, t_{TRGL}	TIOAn/TIOBn (when using as TGIN)	-	$2t_{CYCP}$	-	ns	

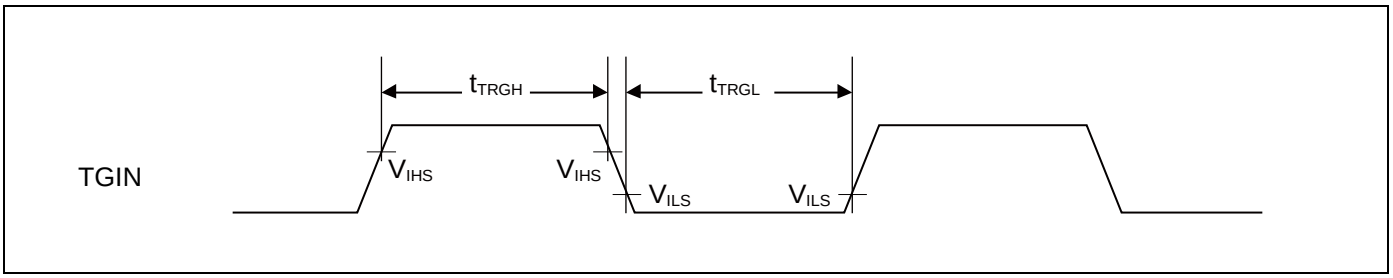

Note:

- *t_{CYCP} indicates the APB bus clock cycle time.*
  About the APB bus number which the Base Timer is connected to, see Block Diagram in this data sheet.

12.5.9 *CSIO/UART Timing*

CSIO (SPI = 0, SCINV = 0)

(V_{CC} = 1.65V to 3.6V, V_{SS} = 0V, T_A = - 40°C to + 85°C)

Parameter	Symbol	Pin name	Conditions	V_{CC} < 2.7 V		V_{CC} ≥ 2.7 V		Unit
				Min	Max	Min	Max	
Baud rate	-	-	-	-	8	-	8	Mbps
Serial clock cycle time	t_{SCYC}	SCKx	Master mode	$4t_{CYCP}$	-	$4t_{CYCP}$	-	ns
SCK ↓ → SOT delay time	t_{SLOVI}	SCKx, SOTx		- 30	+ 30	- 20	+ 20	ns
SIN → SCK ↑ setup time	t_{IVSHI}	SCKx, SINx		50	-	36	-	ns
SCK ↑ → SIN hold time	t_{SHIXI}	SCKx, SINx		0	-	0	-	ns
Serial clock L pulse width	t_{SLSH}	SCKx	Slave mode	$2t_{CYCP}$ - 10	-	$2t_{CYCP}$ - 10	-	ns
Serial clock H pulse width	t_{SHSL}	SCKx		t_{CYCP} + 10	-	t_{CYCP} + 10	-	ns
SCK ↓ → SOT delay time	t_{SLOVE}	SCKx, SOTx		-	50	-	33	ns
SIN → SCK ↑ setup time	t_{IVSHE}	SCKx, SINx		10	-	10	-	ns
SCK ↑ → SIN hold time	t_{SHIXE}	SCKx, SINx		20	-	20	-	ns
SCK falling time	t_F	SCKx		-	5	-	5	ns
SCK rising time	t_R	SCKx		-	5	-	5	ns

Notes:

- *The above characteristics apply to clock synchronous mode.*
- *t_{CYCP} indicates the APB bus clock cycle time.*
  About the APB bus number which Multi-function serial is connected to, see Block Diagram in this data sheet.
- *These characteristics only guarantee the same relocate port number.*
  For example, the combination of SCKx_0 and SOTx_1 is not guaranteed.
- *When the external load capacitance C_L = 30 pF.*

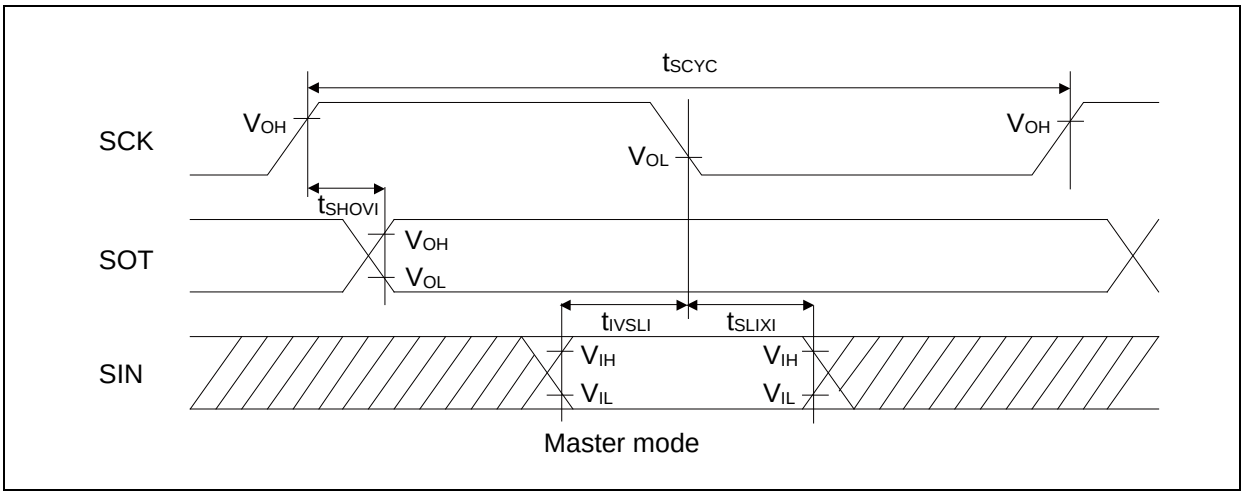
tSCYC
SCK
VOH
VOL
VOH
tSHOVI
SOT
VOH
VOL
tIVSLI
tSLIXI
SIN
VIH
VIL
VIH
VIL
Master mode

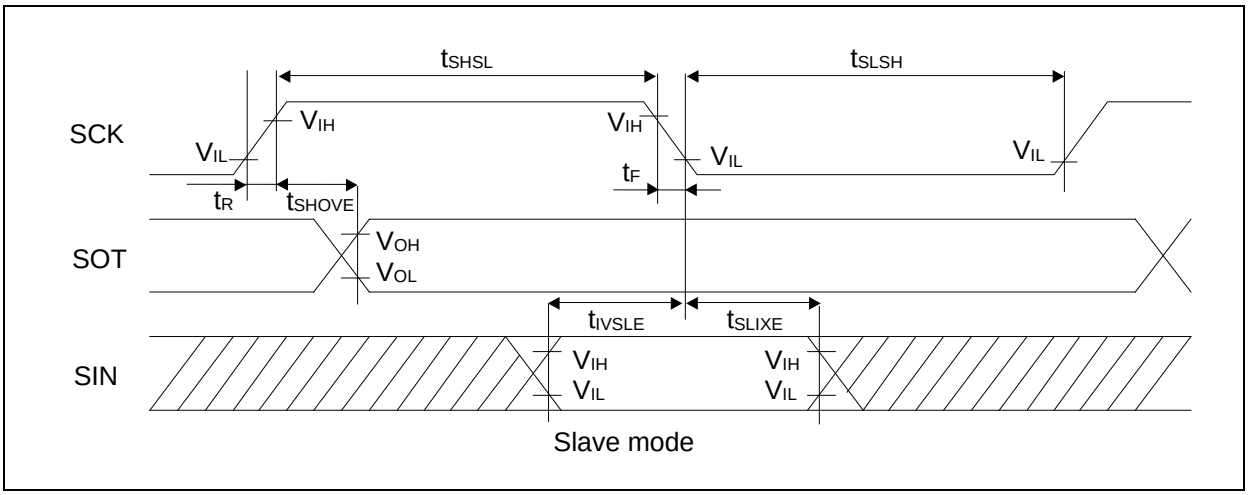
tSHSL
tSLSH
SCK
VIH
VIH
VIL
VIL
VIL
tF
tR
tSHOVE
SOT
VOH
VOL
tIVSLE
tSLIXE
SIN
VIH
VIL
VIH
VIL
Slave mode

CSIO (SPI = 0, SCINV = 1)

(V_{CC} = 1.65V to 3.6V, V_{SS} = 0V, T_A = - 40°C to + 85°C)

Parameter	Symbol	Pin name	Conditions	V_{CC} < 2.7 V		V_{CC} ≥ 2.7 V		Unit
				Min	Max	Min	Max	
Baud rate	-	-	-	-	8	-	8	Mbps
Serial clock cycle time	t_{SCYC}	SCKx	Master mode	$4t_{CYCP}$	-	$4t_{CYCP}$	-	ns
SCK ↑ → SOT delay time	t_{SHOVI}	SCKx, SOTx		- 30	+ 30	- 20	+ 20	ns
SIN → SCK ↓ setup time	t_{IVSLI}	SCKx, SINx		50	-	36	-	ns
SCK ↓ → SIN hold time	t_{SLIXI}	SCKx, SINx		0	-	0	-	ns
Serial clock L pulse width	t_{SLSH}	SCKx	Slave mode	$2t_{CYCP}$ - 10	-	$2t_{CYCP}$ - 10	-	ns
Serial clock H pulse width	t_{SHSL}	SCKx		t_{CYCP} + 10	-	t_{CYCP} + 10	-	ns
SCK ↑ → SOT delay time	t_{SHOVE}	SCKx, SOTx		-	50	-	33	ns
SIN → SCK ↓ setup time	t_{IVSLE}	SCKx, SINx		10	-	10	-	ns
SCK ↓ → SIN hold time	t_{SLIXE}	SCKx, SINx		20	-	20	-	ns
SCK falling time	t_F	SCKx		-	5	-	5	ns
SCK rising time	t_R	SCKx		-	5	-	5	ns

Notes:

- *The above characteristics apply to clock synchronous mode.*
- *t_{CYCP} indicates the APB bus clock cycle time.*
- *About the APB bus number which Multi-function serial is connected to, see Block Diagram in this data sheet.*
- *These characteristics only guarantee the same relocate port number.For example, the combination of SCKx_0 and SOTx_1 is not guaranteed.*
- *When the external load capacitance CL = 30 pF.*

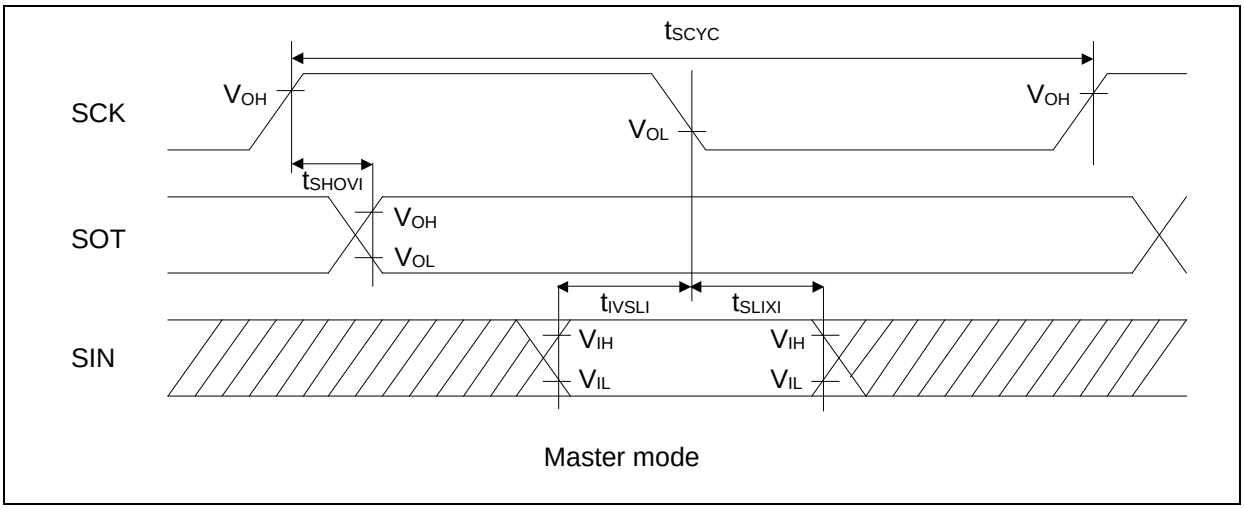

Master mode

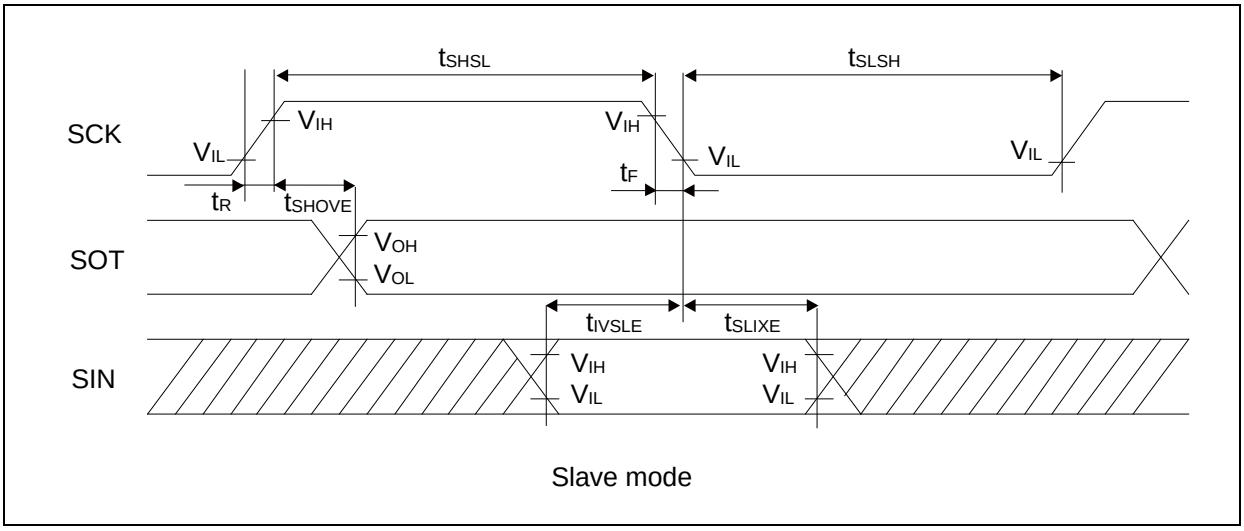

Slave mode

CSIO (SPI = 1, SCINV = 0)

(V_{CC} = 1.65V to 3.6V, V_{SS} = 0V, T_A = - 40°C to + 85°C)

Parameter	Symbol	Pin name	Conditions	V_{CC} < 2.7 V		V_{CC} ≥ 2.7 V		Unit
				Min	Max	Min	Max	
Baud rate	-	-	-	-	8	-	8	Mbps
Serial clock cycle time	t_{SCYC}	SCKx	Master mode	$4t_{CYCP}$	-	$4t_{CYCP}$	-	ns
SCK ↑ → SOT delay time	t_{SHOVI}	SCKx, SOTx		- 30	+ 30	- 20	+ 20	ns
SIN → SCK ↓ setup time	t_{IVSLI}	SCKx, SINx		50	-	36	-	ns
SCK ↓→ SIN hold time	t_{SLIXI}	SCKx, SINx		0	-	0	-	ns
SOT → SCK ↓ delay time	t_{SOVLI}	SCKx, SOTx		$2t_{CYCP}$ - 34	-	$2t_{CYCP}$ - 34	-	ns
Serial clock L pulse width	t_{SLSH}	SCKx	Slave mode	$2t_{CYCP}$ - 10	-	$2t_{CYCP}$ - 10	-	ns
Serial clock H pulse width	t_{SHSL}	SCKx		t_{CYCP} + 10	-	t_{CYCP} + 10	-	ns
SCK ↑ → SOT delay time	t_{SHOVE}	SCKx, SOTx		-	50	-	33	ns
SIN → SCK ↓ setup time	t_{IVSLE}	SCKx, SINx		10	-	10	-	ns
SCK ↓→ SIN hold time	t_{SLIXE}	SCKx, SINx		20	-	20	-	ns
SCK falling time	t_F	SCKx		-	5	-	5	ns
SCK rising time	t_R	SCKx		-	5	-	5	ns

Notes:

- *The above characteristics apply to clock synchronous mode.*
- *t_{CYCP} indicates the APB bus clock cycle time.*
- *About the APB bus number which Multi-function serial is connected to, see Block Diagram in this data sheet.*
- *These characteristics only guarantee the same relocate port number.*
  For example, the combination of SCKx_0 and SOTx_1 is not guaranteed.
- *When the external load capacitance C_L = 30 pF.*

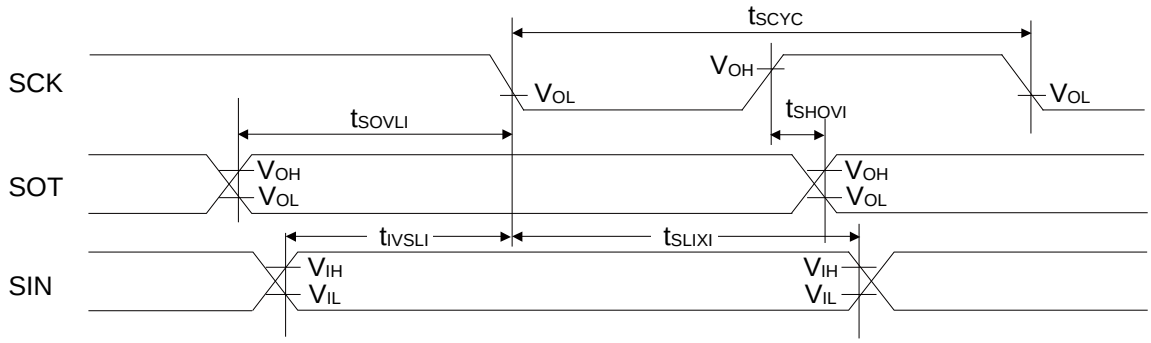

Master mode

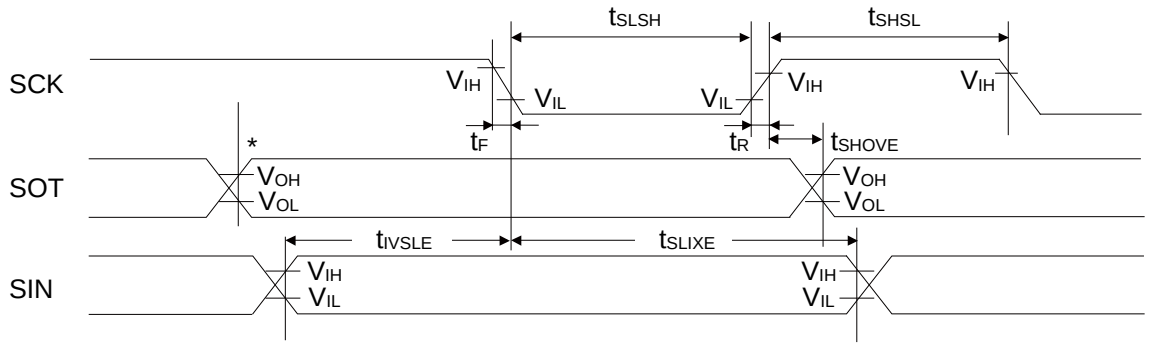

Slave mode

: Changes when writing to TDR register

CSIO (SPI = 1, SCINV = 1)

(V_{CC} = 1.65V to 3.6V, V_{SS} = 0V, T_A = - 40°C to + 85°C)

Parameter	Symbol	Pin name	Conditions	V_{CC} < 2.7 V		V_{CC} ≥ 2.7 V		Unit
				Min	Max	Min	Max	
Baud rate	-	-	-	-	8	-	8	Mbps
Serial clock cycle time	t_{SCYC}	SCKx	Master mode	$4t_{CYCP}$	-	$4t_{CYCP}$	-	ns
SCK ↓ → SOT delay time	t_{SLOVI}	SCKx, SOTx		- 30	+ 30	- 20	+ 20	ns
SIN → SCK ↑ setup time	t_{IVSHI}	SCKx, SINx		50	-	36	-	ns
SCK ↑ → SIN hold time	t_{SHIXI}	SCKx, SINx		0	-	0	-	ns
SOT → SCK ↑ delay time	t_{SOVHI}	SCKx, SOTx		$2t_{CYCP}$ - 34	-	$2t_{CYCP}$ - 34	-	ns
Serial clock L pulse width	t_{SLSH}	SCKx	Slave mode	$2t_{CYCP}$ - 10	-	$2t_{CYCP}$ - 10	-	ns
Serial clock H pulse width	t_{SHSL}	SCKx		t_{CYCP} + 10	-	t_{CYCP} + 10	-	ns
SCK ↓ → SOT delay time	t_{SLOVE}	SCKx, SOTx		-	50	-	33	ns
SIN → SCK ↑ setup time	t_{IVSHE}	SCKx, SINx		10	-	10	-	ns
SCK ↑ → SIN hold time	t_{SHIXE}	SCKx, SINx		20	-	20	-	ns
SCK falling time	t_F	SCKx		-	5	-	5	ns
SCK rising time	t_R	SCKx		-	5	-	5	ns

Notes:

- *The above characteristics apply to clock synchronous mode.*
- *t_{CYCP} indicates the APB bus clock cycle time.*
- *About the APB bus number which Multi-function serial is connected to, see Block Diagram in this data sheet.*
- *These characteristics only guarantee the same relocate port number.*
  For example, the combination of SCKx_0 and SOTx_1 is not guaranteed.
- *When the external load capacitance CL = 30 pF.*

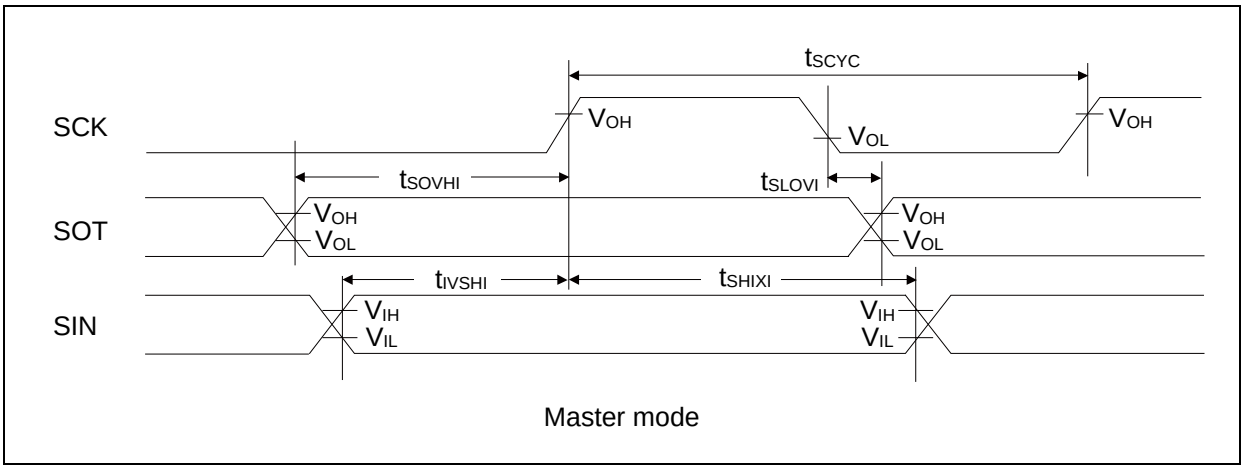

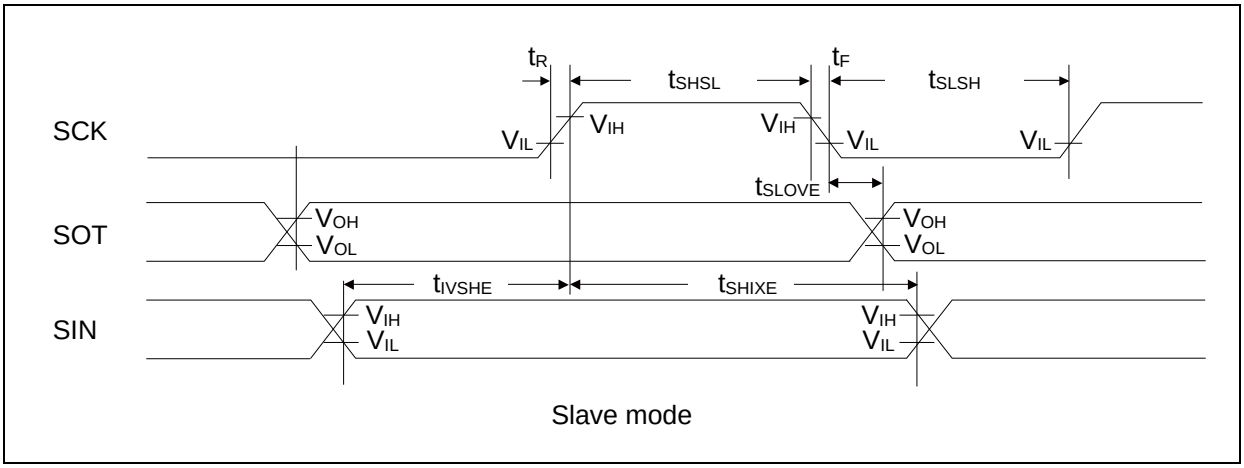

UART external clock input (EXT = 1)

(V_{CC} = 1.65V to 3.6V, V_{SS} = 0V, T_A = - 40°C to + 85°C)

Parameter	Symbol	Conditions	Value		Unit	Remarks
			Min	Max		
Serial clock L pulse width	t_{SLSH}	C_L = 30 pF	t_{CYCP} + 10	-	ns	
Serial clock H pulse width	t_{SHSL}		t_{CYCP} + 10	-	ns	
SCK falling time	t_F		-	5	ns	
SCK rising time	t_R		-	5	ns	

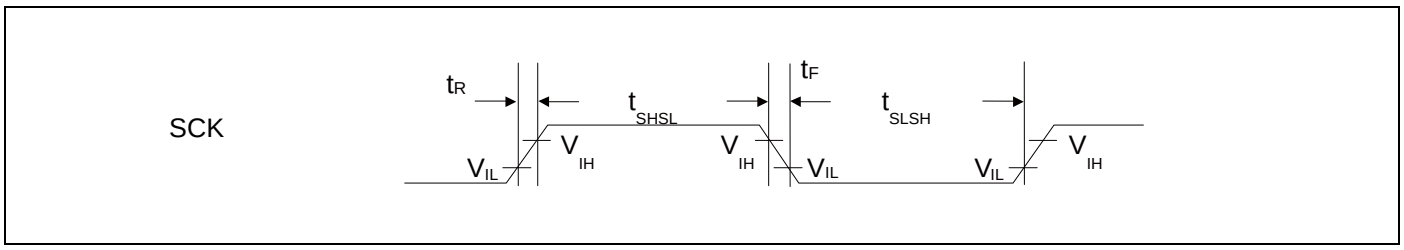

12.5.10 *External Input Timing*

(V_{CC} = 1.65V to 3.6V, V_{SS} = 0V, T_A = - 40°C to + 85°C)

Parameter	Symbol	Pin name	Conditions	Value		Unit	Remarks
				Min	Max		
Input pulse width	t_{INH}, t_{INL}	ADTG	-	$2t_{CYCP}$[1]	-	ns	A/D converter trigger input
		INTxx, NMIX	[2]	$2t_{CYCP}$ + 100[1]	-	ns	External interrupt NMI
			[3]	500	-	ns	
		WKUPx	[4]	600	-	ns	Deep standby wake up

1: t_{CYCP} indicates the APB bus clock cycle time.

About the APB bus number which the Multi-function Timer is connected to, see Block Diagramin this data sheet.

2: When in Run mode, in Sleep mode.

3: When in Timer mode, in RTC mode, in Stop mode.

4: When in Deep Standby RTC mode, in Deep Standby Stop mode.

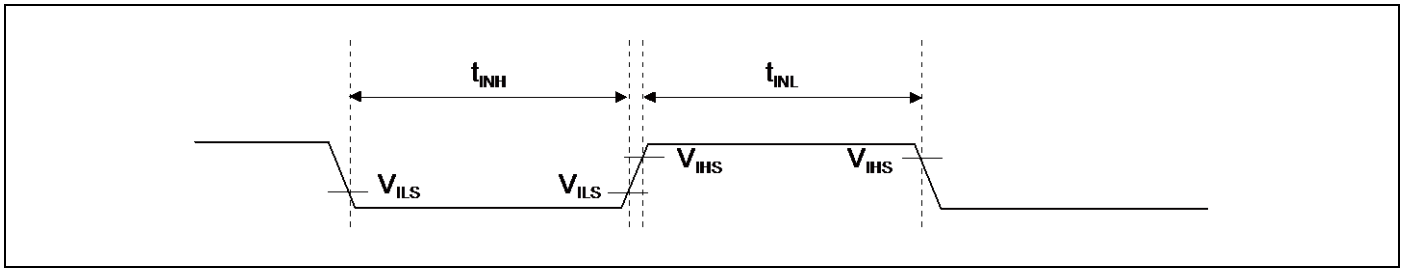

12.5.11 *I²C Timing*

(V_{CC} = 1.65V to 3.6V, V_{SS} = 0V, T_A = - 40°C to + 85°C)

Parameter	Symbol	Conditions	Standard-mode		Fast-mode		Unit	Remarks
			Min	Max	Min	Max		
SCL clock frequency	f_{SCL}	C_L = 30 pF, R = (V_p/I_{OL})[1]	0	100	0	400	kHz	
(Repeated) START condition hold time SDA ↓ → SCL ↓	t_{HDSTA}		4.0	-	0.6	-	µs	
SCL clock L width	t_{LOW}		4.7	-	1.3	-	µs	
SCL clock H width	t_{HIGH}		4.0	-	0.6	-	µs	
(Repeated) START condition setup time SCL ↑ → SDA ↓	t_{SUSTA}		4.7	-	0.6	-	µs	
Data hold time SCL ↓ → SDA ↓↑	t_{HDDAT}		0	3.45[2]	0	0.9[3]	µs	
Data setup time SDA ↓↑ → SCL ↑	t_{SUDAT}		250	-	100	-	ns	
STOP condition setup time SCL ↑ → SDA ↑	t_{SUSTO}		4.0	-	0.6	-	µs	
Bus free time between STOP condition and START condition	t_{BUF}		4.7	-	1.3	-	µs	
Noise filter	t_{SP}	-	2 t_{CYCP}[4]	-	2 t_{CYCP}[4]	-	ns	

1: R and C represent the pull-up resistor and load capacitance of the SCL and SDA lines, respectively. Vp indicates the power supply voltage of the pull-up resistor and I_{OL} indicates V_{OL} guaranteed current.

2: The maximum t_{HDDAT} must satisfy that it does not extend at least L period (t_{LOW}) of device's SCL signal.

3: A Fast-mode I²C bus device can be used on a Standard-mode I²C bus system as long as the device satisfies the requirement of t_{SUDAT} ≥ 250 ns.

4: t_{CYCP} is the APB bus clock cycle time.About the APB bus number that I²C is connected to, see Block Diagram in this data sheet. To use Standard-mode, set the APB bus clock at 2 MHz or more.To use Fast-mode, set the APB bus clock at 8 MHz or more.

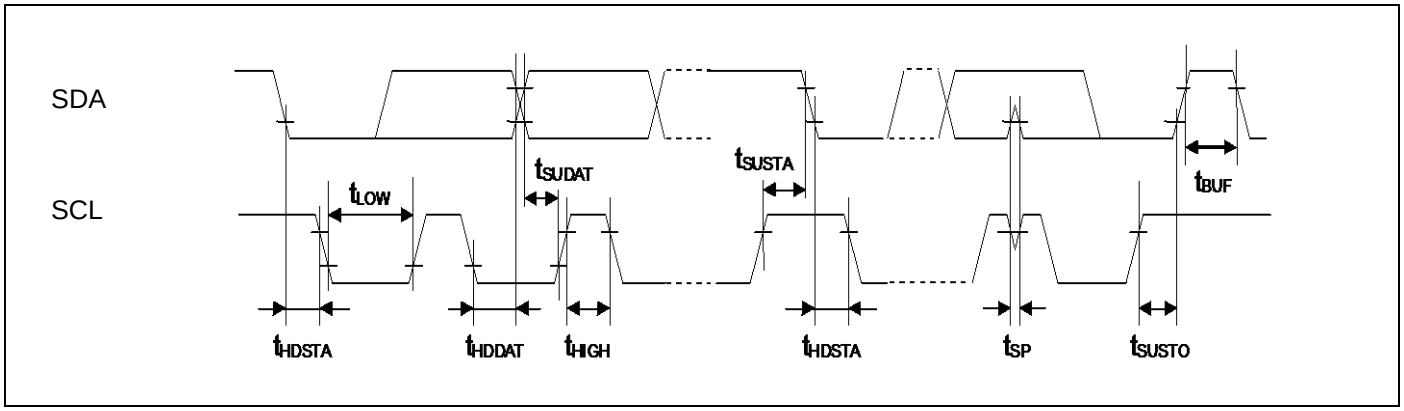

12.5.12 *ETM Timing*

(V_{CC} = 1.65V to 3.6V, V_{SS} = 0V, T_A = - 40°C to + 85°C)

Parameter	Symbol	Pin name	Conditions	Value		Unit	Remarks
				Min	Max		
Data hold	t_{ETMH}	TRACECLK, TRACED[3:0]	V_{CC} ≥ 2.7 V	2	11	ns	
			V_{CC} < 2.7 V	2	15		
TRACECLK frequency	1/ t_{TRACE}	TRACECLK	V_{CC} ≥ 2.7 V	-	40	MHz	
			V_{CC} < 2.7 V	-	20	MHz	
TRACECLK clock cycle	t_{TRACE}		V_{CC} ≥ 2.7 V	25	-	ns	
			V_{CC} < 2.7 V	50	-	ns	

Note:

- *When the external load capacitance C_L = 30 pF.*

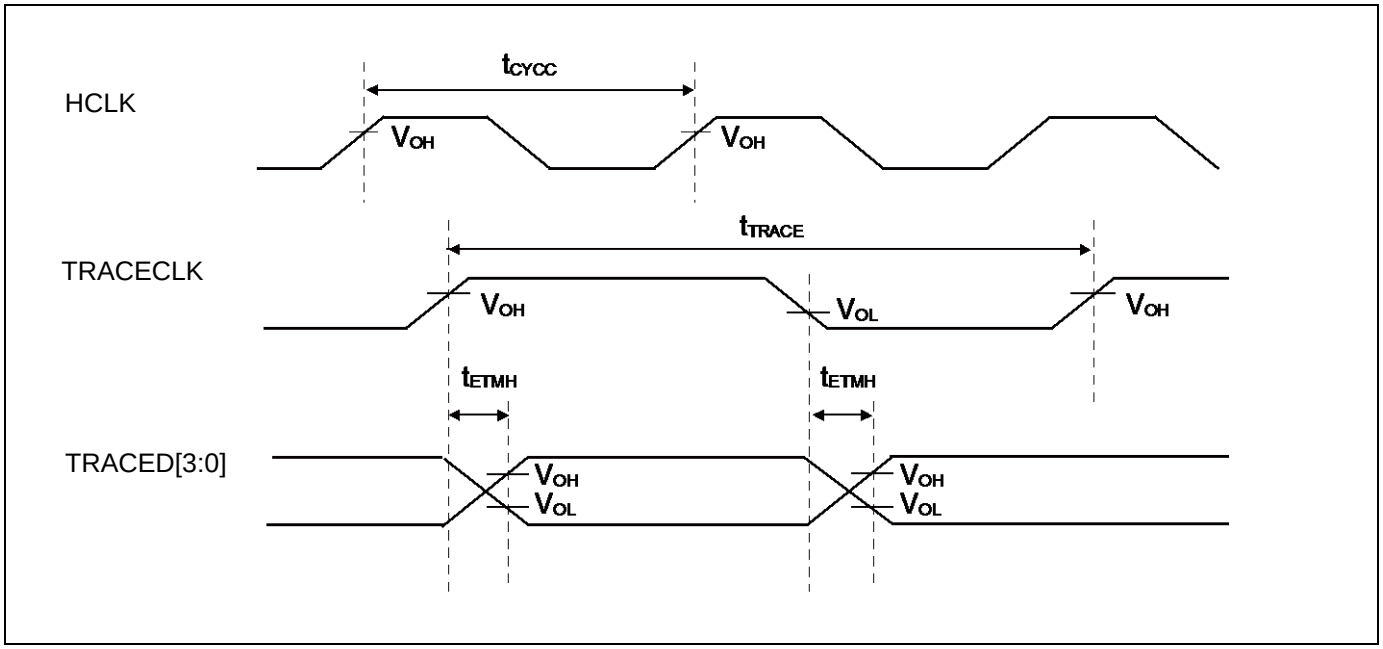

12.5.13 *JTAG Timing*

(V_{CC} = 1.65V to 3.6V, V_{SS} = 0V, T_A = - 40°C to + 85°C)

Parameter	Symbol	Pin name	Conditions	Value		Unit	Remarks
				Min	Max		
TMS, TDI setup time	t_{JTAGS}	TCK, TMS, TDI	V_{CC} ≥ 2.7 V	15	-	ns	
			V_{CC} < 2.7 V				
TMS, TDI hold time	t_{JTAGH}	TCK, TMS, TDI	V_{CC} ≥ 2.7 V	15	-	ns	
			V_{CC} < 2.7 V				
TDO delay time	t_{JTAGD}	TCK, TDO	V_{CC} ≥ 2.7 V	-	25	ns	
			V_{CC} < 2.7 V	-	45		

Note:

– *When the external load capacitance C_L = 30 pF.*

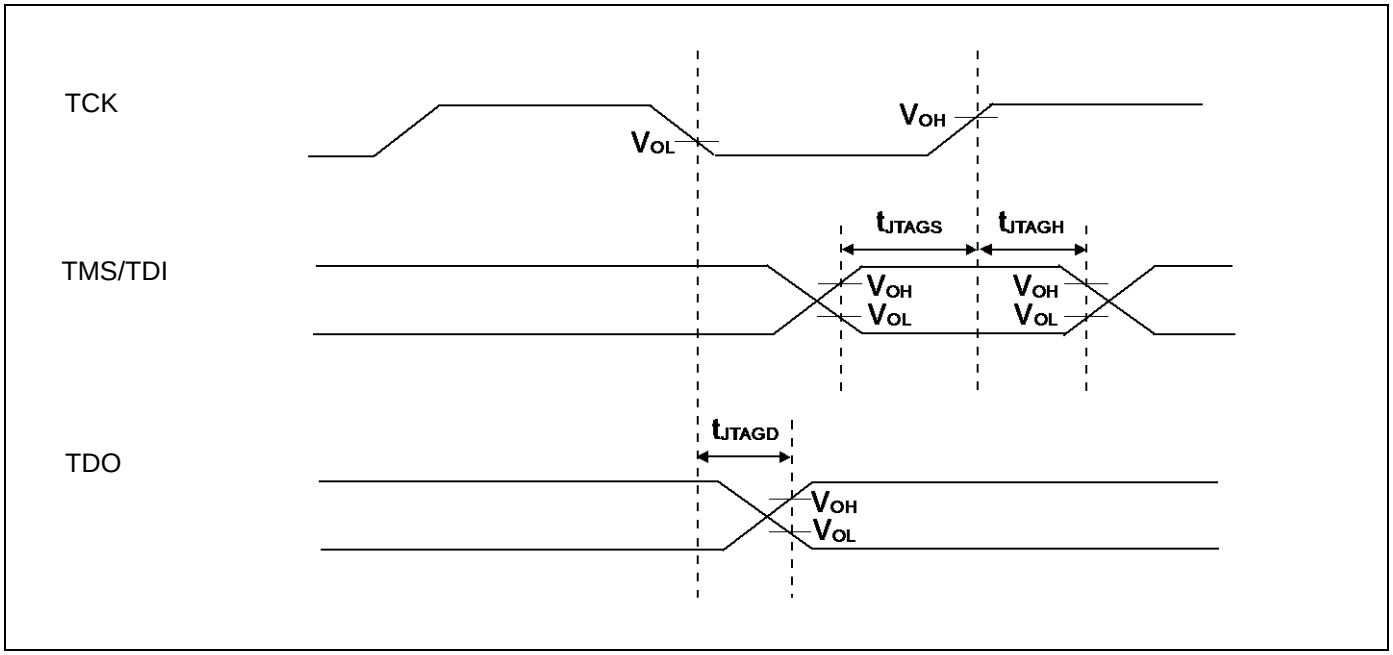

12.6 12-bit A/D Converter

Electrical Characteristics for the A/D Converter

(V_{CC} = AV_{CC} = 1.65V to 3.6V, V_{SS} = AV_{SS} = 0V, T_A = - 40°C to + 85°C)

Parameter	Symbol	Pin name	Value			Unit	Remarks
			Min	Typ	Max		
Resolution	-	-	-	-	12	bit	
Integral Nonlinearity	-	-	-	± 2	± 4.5	LSB	
Differential Nonlinearity	-	-	-	± 2.2	± 2.5	LSB	
Zero transition voltage	V_{ZT}	ANxx	-	± 6	± 15	mV	
Full-scale transition voltage	V_{FST}	ANxx	-	AVRH ± 6	AVRH ± 15	mV	
Conversion time	-	-	2.0[1]	-	-	µs	AV_{CC} ≥ 2.7 V
			4.0[1]	-	-		1.8 V≤ AV_{CC} < 2.7 V
			10[1]	-	-		1.65 V≤ AV_{CC} < 1.8 V
Sampling time[2]	t_S	-	0.6	-	10	us	AV_{CC} ≥ 2.7 V
			1.2	-			1.8 V≤ AV_{CC} < 2.7 V
			3.0	-			1.65V≤ AV_{CC} < 1.8V
Compare clock cycle[3]	t_{CCK}	-	100	-	1000	ns	AV_{CC} ≥ 2.7 V
			200				1.8 V≤ AV_{CC} < 2.7 V
			500				1.65 V≤ AV_{CC} < 1.8 V
State transition time to operation permission	t_{STT}	-	-	-	1.0	µs	
Power supply current (analog + digital)	-	AVCC	-	0.27	0.42	mA	A/D 1unit operation
			-	0.03	10	µA	When A/D stops
Reference power supply current (between AVRH to AVSS)	-	AVRH	-	0.72	1.29	mA	A/D 1unit operation AVRH=3.6 V
			-	0.02	2.6	µA	When A/D stops
Analog input capacity	C_{AIN}	-	-	-	9.4	pF	
Analog input resistor	R_{AIN}	-	-	-	2.2	kΩ	AV_{CC} ≥ 2.7V
					5.5		1.8 V≤ AV_{CC} < 2.7 V
					10.5		1.65 V≤ AV_{CC} < 1.8 V
Interchannel disparity	-	-	-	-	4	LSB	
Analog port input leak current	-	ANxx	-	-	5	µA	
Analog input voltage	-	ANxx	AV_{SS}	-	AVRH	V	
Reference voltage	-	AVRH	2.7	-	AV_{CC}	V	AV_{CC} ≥ 2.7 V
			AV_{CC}				AV_{CC} < 2.7 V
	-	AVRL	AV_{SS}	-	AV_{SS}	V	

1: The conversion time is the value of sampling time (t_S) + compare time (t_C).

The condition of the minimum conversion time is the following.

AV_{CC} ≥ 2.7 V, HCLK=40 MHz sampling time: 0.6 µs, compare time: 1.4 µs
1.8 V ≤ AV_{CC} < 2.7 V, HCLK=40 MHz sampling time: 1.2 µs, compare time: 2.8 µs
1.65 V ≤ AV_{CC} < 1.8 V, HCLK=40 MHz sampling time: 3 µs, compare time: 7 µs

Ensure that it satisfies the value of the sampling time (t_S) and compare clock cycle (t_{CCK}).
For setting of the sampling time and the compare clock cycle, see Chapter 1-1: A/D Converter in FM3 Family Peripheral Manual Analog Macro Port.

The register setting of the A/D Converter are reflected in the operation according to the APB bus clock timing.

The sampling clock and compare clock is generated from the Base clock (HCLK).

About the APB bus number which the A/D Converter is connected to, see Block Diagram in this data sheet.

2: A necessary sampling time changes by external impedance.

Ensure that it set the sampling time to satisfy (Equation 1).

3: The compare time (t_C) is the value of (Equation 2).

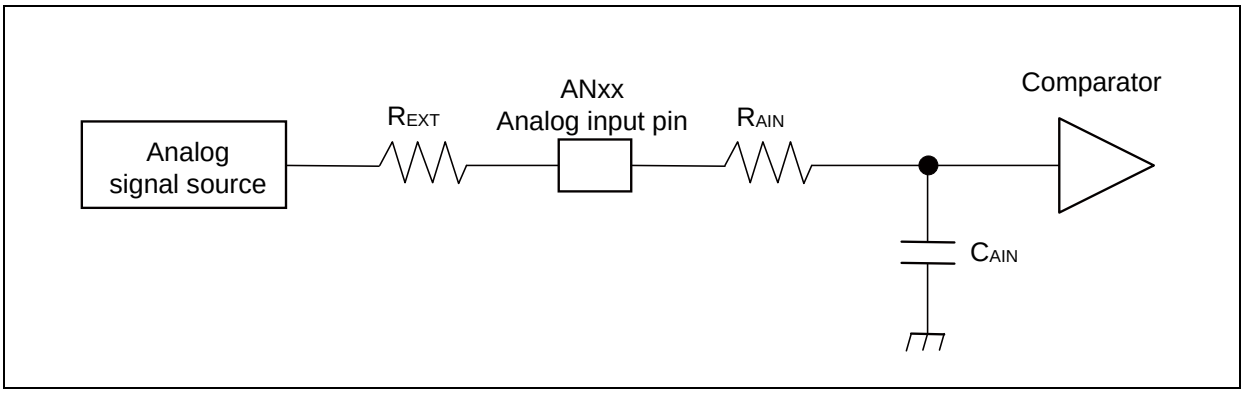

(Equation 1) $t_S \geq (R_{AIN} + R_{EXT}) \times C_{AIN} \times 9$

t_S: *Sampling time[ns]*

R_{AIN}: *Input resistor of A/D[kΩ] = 2.2 kΩ at 2.7 V ≤ AV_{CC} ≤ 3.6 V*

Input resistor of A/D[kΩ] = 5.5 kΩ at 1.8 V ≤ AV_{CC} ≤ 2.7 V

Input resistor of A/D[kΩ] = 10.5 kΩ at 1.65 V ≤ AV_{CC} ≤ 1.8 V

C_{AIN}: *Input capacity of A/D[pF] = 9.4 pF at 1.65 V ≤ AV_{CC} ≤ 3.6 V*

R_{EXT}: *Output impedance of external circuit[kΩ]*

(Equation 2) $t_C = t_{CCK} \times 14$

t_C: *Compare time*

t_{CCK}: *Compare clock cycle*

Definition of 12-bit A/D Converter Terms

- Resolution: Analog variation that is recognized by an A/D converter.
- Integral Nonlinearity: Deviation of the line between the zero-transition point (0b000000000000 ←→ 0b000000000001) and the full-scale transition point (0b111111111110 ←→ 0b111111111111) from the actual conversion characteristics.
- Differential Nonlinearity: Deviation from the ideal value of the input voltage that is required to change the output code by 1 LSB.

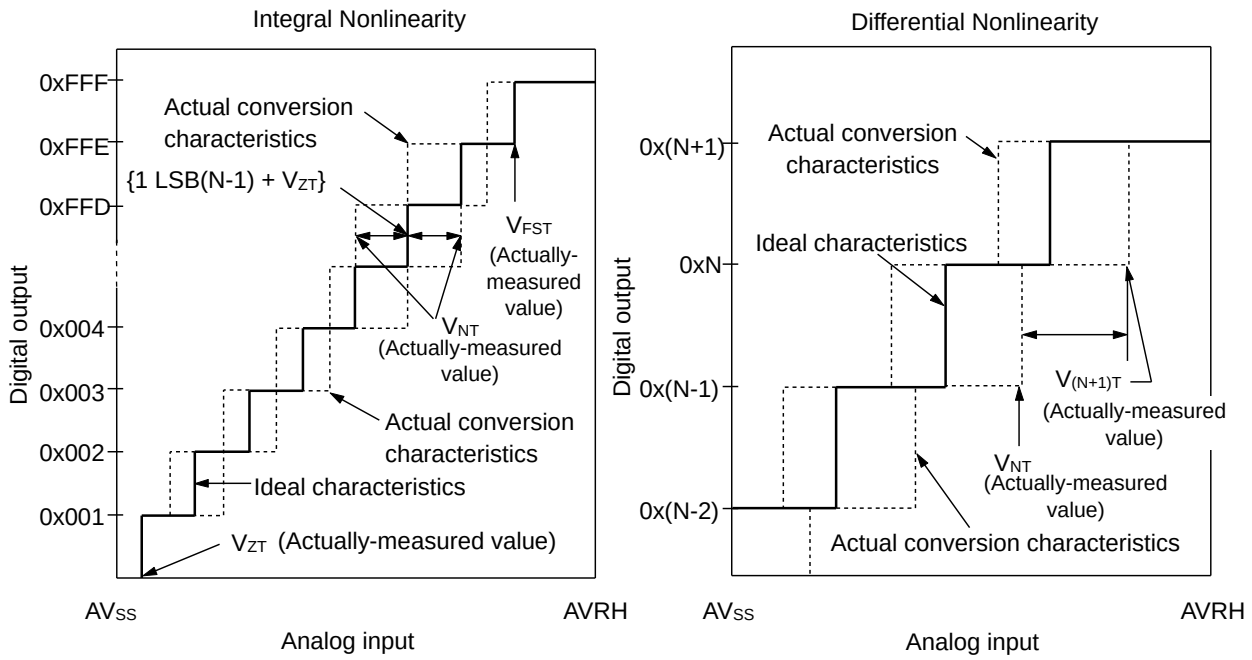

$$\text{Linearity error of digital output N} = \frac{V_{NT} - \{1LSB \times (N - 1) + V_{ZT}\}}{1LSB} \text{ [LSB]}$$

$$\text{Differential linearity error of digital output N} = \frac{V_{(N+1)T} - V_{NT}}{1LSB} - 1 \text{ [LSB]}$$

$$1LSB = \frac{V_{FST} - V_{ZT}}{4094}$$

N: A/D converter digital output value.
V_{ZT}: Voltage at which the digital output changes from 0x000 to 0x001.
V_{FST}: Voltage at which the digital output changes from 0xFFE to 0xFFF.
V_{NT}: Voltage at which the digital output changes from 0x(N − 1) to 0xN.

12.7 USB Characteristics

(V_{CC} = 3.0V to 3.6V, V_{SS} = 0V, T_A = - 40°C to + 85°C)

Parameter		Symbol	Pin name	Conditions	Value		Unit	Remarks
					Min	Max		
Input characteristics	Input H level voltage	V_{IH}	UDP0, UDM0	-	2.0	V_{CC} + 0.3	V	[1]
	Input L level voltage	V_{IL}		-	V_{SS} - 0.3	0.8	V	[1]
	Differential input sensitivity	V_{DI}		-	0.2	-	V	[2]
	Different common mode range	V_{CM}		-	0.8	2.5	V	[2]
Output characteristics	Output H level voltage	V_{OH}		External pull-down resistor = 15kΩ	2.8	3.6	V	[3]
	Output L level voltage	V_{OL}		External pull-up resistor = 1.5kΩ	0	0.3	V	[3]
	Crossover voltage	V_{CRS}		-	1.3	2.0	V	[4]
	Rising time	t_{FR}		Full-Speed	4	20	ns	[5]
	Falling time	t_{FF}		Full-Speed	4	20	ns	[5]
	Rising/falling time matching	t_{FRFM}		Full-Speed	90	111.11	%	[5]
	Output impedance	Z_{DRV}		Full-Speed	28	44	Ω	[5]
	Rising time	t_{LR}		Low-Speed	75	300	ns	[7]
	Falling time	t_{LF}		Low-Speed	75	300	ns	[7]
	Rising/falling time matching	t_{LRFM}		Low-Speed	80	125	%	[7]

1: The switching threshold voltage of Single-End-Receiver of USB I/O buffer is set as within V_{IL} (Max) = 0.8V, V_{IH} (Min) = 2.0 V (TTL input standard). There are some hysteresis to lower noise sensitivity.

2: Use the differential-Receiver to receive the USB differential data signal.
The Differential-Receiver has 200 mV of differential input sensitivity when the differential data input is within 0.8 V to 2.5 V to the local ground reference level. Above voltage range is the common mode input voltage range.

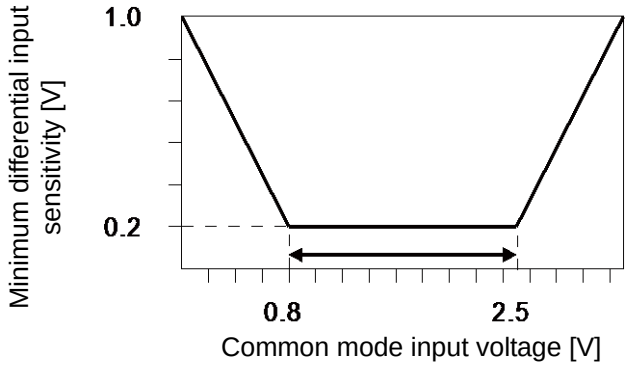

3: The output drive capability of the driver is below 0.3 V at Low-State (V_{OL}) (to 3.6 V and 1.5 kΩ load), and 2.8 V or above (to ground and 15 kΩ load) at High-State (V_{OH}).

4: The cross voltage of the external differential output signal (D + /D −) of USB I/O buffer is within 1.3 V to 2.0 V.

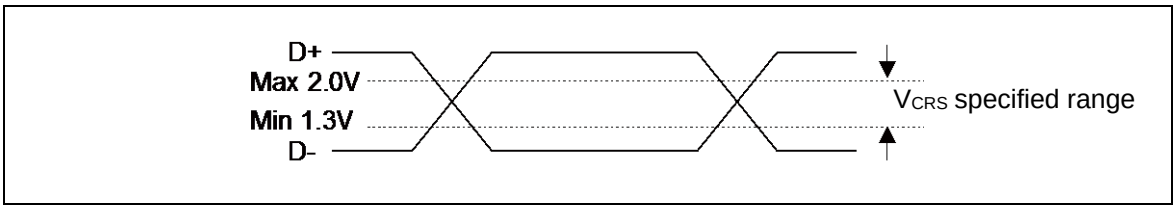

5: They indicate the rising time (Trise) and falling time (Tfall) of the full-speed differential data signal.
They are defined by the time between 10% and 90% of the output signal voltage.
For full-speed buffer, Tr/Tf ratio is regulated as within ± 10% to minimize RFI emission.

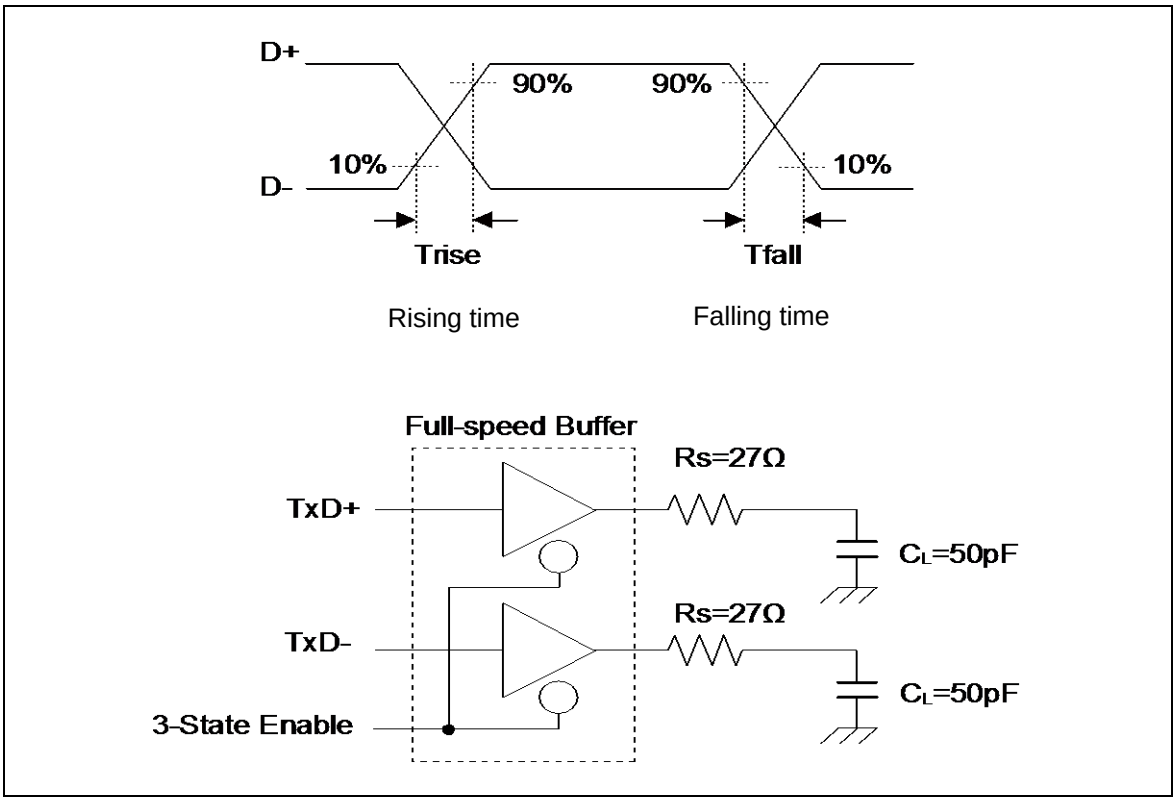

6: USB Full-speed connection is performed via twist pair cable shield with 90Ω ± 15% characteristic impedance (Differential Mode).
USB standard defines that output impedance of USB driver must be in range from 28 Ω to 44 Ω. So, discrete series resistor (Rs) addition is defined in order to satisfy the above definition and keep balance.
When using this USB I/O, use it with 25 Ω to 30 Ω (recommendation value 27 Ω) Series resistor Rs.

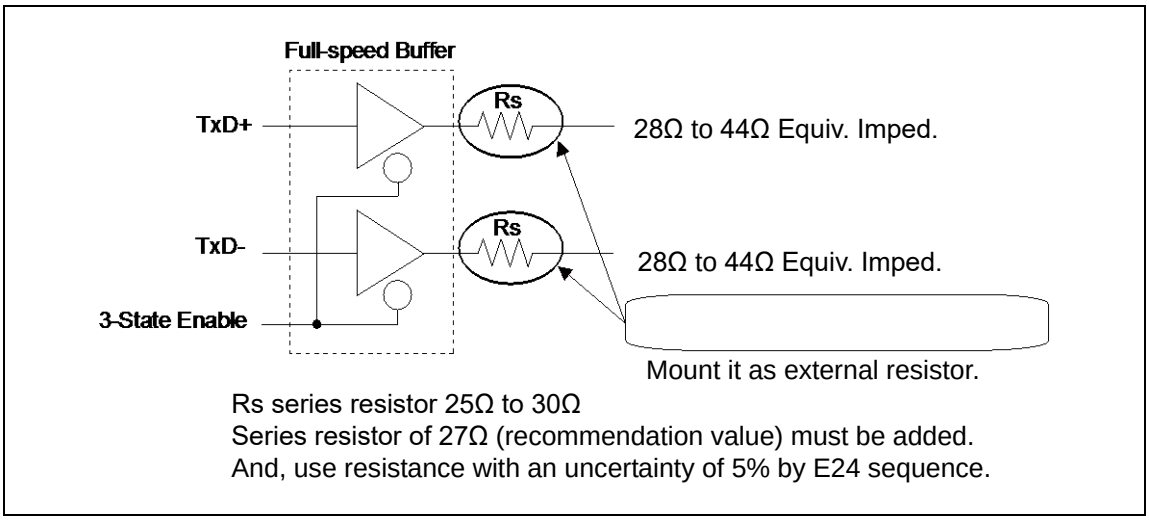

7: They indicate the rising time (Trise) and falling time (Tfall) of the low-speed differential data signal.They are defined by the time between 10% and 90% of the output signal voltage.

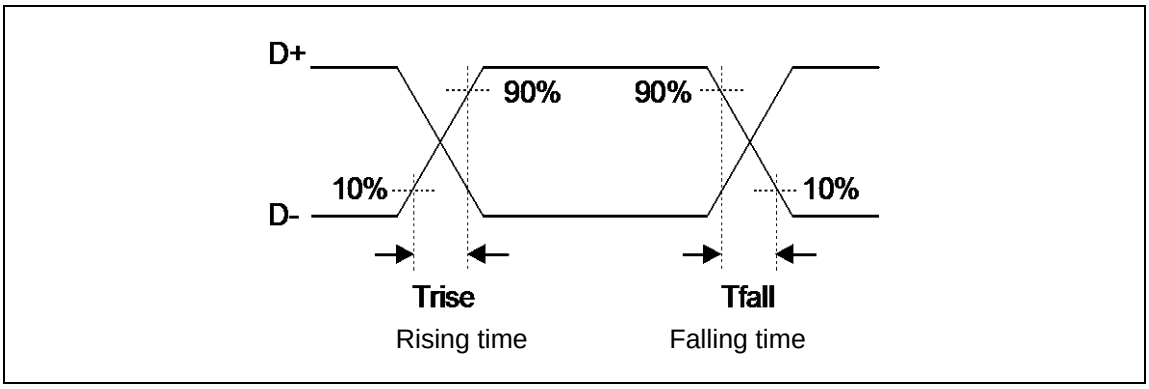

See Figure • Low-Speed Load (Compliance Load) for conditions of the external load.

Low-Speed Load (Upstream Port Load) - Reference 1

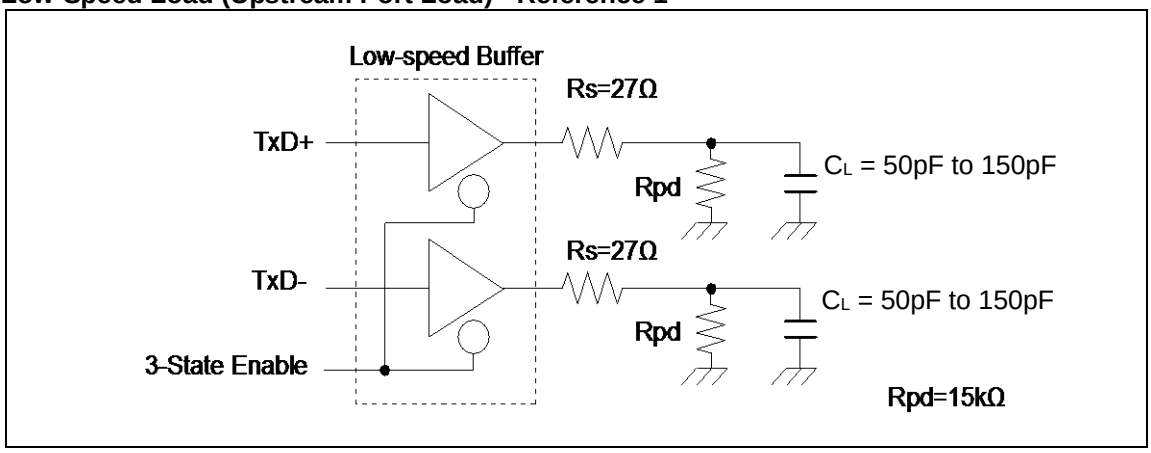

Low-Speed Load (Downstream Port Load) - Reference 2

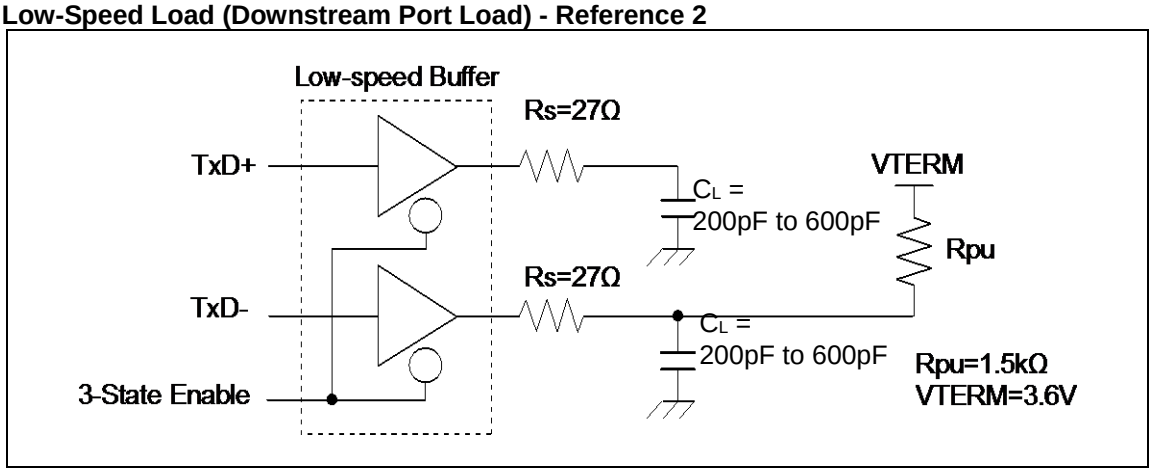

Low-Speed Load (Compliance Load)

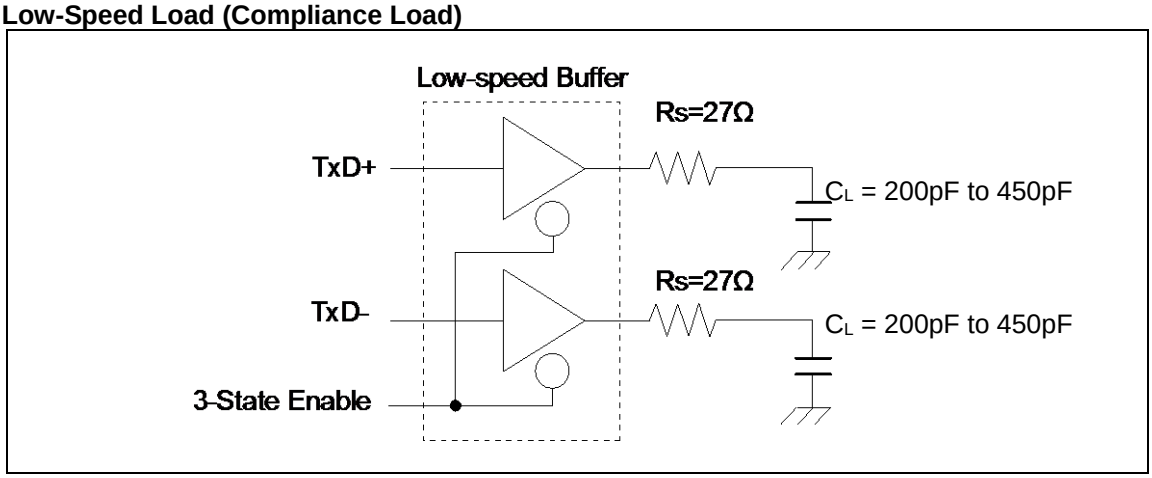

12.8 Low-Voltage Detection Characteristics

Low-Voltage Detection Reset

(T_A = - 40°C to + 85°C)

Parameter	Symbol	Conditions	Value			Unit	Remarks
			Min	Typ	Max		
Detected voltage	VDL	SVHR[1] = 00000	1.38	1.50	1.60	V	When voltage drops
Released voltage	VDH		1.43	1.55	1.65	V	When voltage rises
Detected voltage	VDL	SVHR[1] = 00001	1.43	1.55	1.65	V	When voltage drops
Released voltage	VDH		Same as SVHR = 00000 value			V	When voltage rises
Detected voltage	VDL	SVHR[1] = 00010	1.47	1.60	1.73	V	When voltage drops
Released voltage	VDH		Same as SVHR = 00000 value			V	When voltage rises
Detected voltage	VDL	SVHR[1] = 00011	1.52	1.65	1.78	V	When voltage drops
Released voltage	VDH		Same as SVHR = 00000 value			V	When voltage rises
Detected voltage	VDL	SVHR[1] = 00100	1.56	1.70	1.84	V	When voltage drops
Released voltage	VDH		Same as SVHR = 00000 value			V	When voltage rises
Detected voltage	VDL	SVHR[1] = 00101	1.61	1.75	1.89	V	When voltage drops
Released voltage	VDH		Same as SVHR = 00000 value			V	When voltage rises
Detected voltage	VDL	SVHR[1] = 00110	1.66	1.80	1.94	V	When voltage drops
Released voltage	VDH		Same as SVHR = 00000 value			V	When voltage rises
Detected voltage	VDL	SVHR[1] = 00111	1.70	1.85	2.00	V	When voltage drops
Released voltage	VDH		Same as SVHR = 00000 value			V	When voltage rises
Detected voltage	VDL	SVHR[1] = 01000	1.75	1.90	2.05	V	When voltage drops
Released voltage	VDH		Same as SVHR = 00000 value			V	When voltage rises
Detected voltage	VDL	SVHR[1] = 01001	1.79	1.95	2.11	V	When voltage drops
Released voltage	VDH		Same as SVHR = 00000 value			V	When voltage rises
Detected voltage	VDL	SVHR[1] = 01010	1.84	2.00	2.16	V	When voltage drops
Released voltage	VDH		Same as SVHR = 00000 value			V	When voltage rises
Detected voltage	VDL	SVHR[1] = 01011	1.89	2.05	2.21	V	When voltage drops
Released voltage	VDH		Same as SVHR = 00000 value			V	When voltage rises
Detected voltage	VDL	SVHR[1] = 01100	2.30	2.50	2.70	V	When voltage drops
Released voltage	VDH		Same as SVHR = 00000 value			V	When voltage rises
Detected voltage	VDL	SVHR[1] = 01101	2.39	2.60	2.81	V	When voltage drops
Released voltage	VDH		Same as SVHR = 00000 value			V	When voltage rises
Detected voltage	VDL	SVHR[1] = 01110	2.48	2.70	2.92	V	When voltage drops
Released voltage	VDH		Same as SVHR = 00000 value			V	When voltage rises
Detected voltage	VDL	SVHR[1] = 01111	2.58	2.80	3.02	V	When voltage drops
Released voltage	VDH		Same as SVHR = 00000 value			V	When voltage rises
Detected voltage	VDL	SVHR[1] = 10000	2.67	2.90	3.13	V	When voltage drops
Released voltage	VDH		Same as SVHR = 00000 value			V	When voltage rises
Detected voltage	VDL	SVHR[1] = 10001	2.76	3.00	3.24	V	When voltage drops
Released voltage	VDH		Same as SVHR = 00000 value			V	When voltage rises
Detected voltage	VDL	SVHR[1] = 10010	2.85	3.10	3.35	V	When voltage drops
Released voltage	VDH		Same as SVHR = 00000 value			V	When voltage rises
Detected voltage	VDL	SVHR[1] = 10011	2.94	3.20	3.46	V	When voltage drops
Released voltage	VDH		Same as SVHR = 00000 value			V	When voltage rises
LVD stabilization wait time	t_{LVDW}	-	-	-	5200 × t_{CYCP}[2]	µs	
LVD detection delay time	t_{LVDDL}	-	-	-	200	µs	

1: The SVHR bit of Low-Voltage Detection Voltage Control Register (LVD_CTL) is initialized to 00000 by Low-Voltage Detection Reset.

2: t_{CYCP} indicates the APB2 bus clock cycle time.

12.8.1 *Interrupt of Low-Voltage Detection*

(T_A = - 40°C to + 85°C)

Parameter	Symbol	Conditions	Value			Unit	Remarks
			Min	Typ	Max		
Detected voltage	VDL	SVHI = 00100	1.56	1.70	1.84	V	When voltage drops
Released voltage	VDH		1.61	1.75	1.89	V	When voltage rises
Detected voltage	VDL	SVHI = 00101	1.61	1.75	1.89	V	When voltage drops
Released voltage	VDH		1.66	1.80	1.94	V	When voltage rises
Detected voltage	VDL	SVHI = 00110	1.66	1.80	1.94	V	When voltage drops
Released voltage	VDH		1.70	1.85	2.00	V	When voltage rises
Detected voltage	VDL	SVHI = 00111	1.70	1.85	2.00	V	When voltage drops
Released voltage	VDH		1.75	1.90	2.05	V	When voltage rises
Detected voltage	VDL	SVHI = 01000	1.75	1.90	2.05	V	When voltage drops
Released voltage	VDH		1.79	1.95	2.11	V	When voltage rises
Detected voltage	VDL	SVHI = 01001	1.79	1.95	2.11	V	When voltage drops
Released voltage	VDH		1.84	2.00	2.16	V	When voltage rises
Detected voltage	VDL	SVHI = 01010	1.84	2.00	2.16	V	When voltage drops
Released voltage	VDH		1.89	2.05	2.21	V	When voltage rises
Detected voltage	VDL	SVHI = 01011	1.89	2.05	2.21	V	When voltage drops
Released voltage	VDH		1.93	2.10	2.27	V	When voltage rises
Detected voltage	VDL	SVHI = 01100	2.30	2.50	2.70	V	When voltage drops
Released voltage	VDH		2.39	2.60	2.81	V	When voltage rises
Detected voltage	VDL	SVHI = 01101	2.39	2.60	2.81	V	When voltage drops
Released voltage	VDH		2.48	2.70	2.92	V	When voltage rises
Detected voltage	VDL	SVHI = 01110	2.48	2.70	2.92	V	When voltage drops
Released voltage	VDH		2.58	2.80	3.02	V	When voltage rises
Detected voltage	VDL	SVHI = 01111	2.58	2.80	3.02	V	When voltage drops
Released voltage	VDH		2.67	2.90	3.13	V	When voltage rises
Detected voltage	VDL	SVHI = 10000	2.67	2.90	3.13	V	When voltage drops
Released voltage	VDH		2.76	3.00	3.24	V	When voltage rises
Detected voltage	VDL	SVHI = 10001	2.76	3.00	3.24	V	When voltage drops
Released voltage	VDH		2.85	3.10	3.35	V	When voltage rises
Detected voltage	VDL	SVHI = 10010	2.85	3.10	3.35	V	When voltage drops
Released voltage	VDH		2.94	3.20	3.46	V	When voltage rises
Detected voltage	VDL	SVHI = 10011	2.94	3.20	3.46	V	When voltage drops
Released voltage	VDH		3.04	3.30	3.56	V	When voltage rises
LVD stabilization wait time	t_{LVDW}	-	-	-	5200 × t_{CYCP}*	µs	
LVD detection delay time	t_{LVDDL}	-	-	-	200	µs	

*: t_{CYCP} *indicates the APB2 bus clock cycle time.*

12.9 Flash Memory Write/Erase Characteristics

12.9.1 *Write / Erase time*

(V_{CC} = 1.65V to 3.6V, T_A = - 40°C to + 85°C)

Parameter		Value		Unit	Remarks
		Typ*	Max*		
Sector erase time	Large Sector	1.1	2.7	s	Includes write time prior to internal erase
	Small Sector	0.3	0.9		
Half word (16-bit) write time		30	528	µs	Not including system-level overhead time
Chip erase time		6.8	18	s	Includes write time prior to internal erase

**: The typical value is immediately after shipment, the maximam value is guarantee value under 10,000 cycle of erase/write.*

12.9.2 *Write cycles and data hold time*

Erase/write cycles (cycle)	Data hold time (year)	Remarks
1,000	20*	
10,000	10*	

**: At average + 85℃*

12.10 Return Time from Low-Power Consumption Mode

12.10.1 *Return Factor: Interrupt/WKUP*

The return time from Low-Power consumption mode is indicated as follows. It is from receiving the return factor to starting the program operation.

Return Count Time

(V_{CC} = 1.65V to 3.6V, V_{DDI} = 1.1V to 1.3V, V_{SS} = 0V, T_A = - 40°C to + 85°C)

Parameter	Symbol	Value		Unit	Remarks
		Typ	Max*		
Sleep mode	t_{ICNT}	t_{CYCC}		µs	
High-speed CR Timer mode, Main Timer mode, PLL Timer mode		40	80	µs	
Low-speed CR Timer mode		350	700	µs	
Sub Timer mode		690	880	µs	
RTC mode, Stop mode		278	523	µs	
Deep Standby RTC mode		318	603	µs	When RAM is off
Deep Standby Stop mode		278	523	µs	When RAM is on

: The maximum value depends on the accuracy of built-in CR.

Operation example of return from Low-Power consumption mode (by external interrupt*)

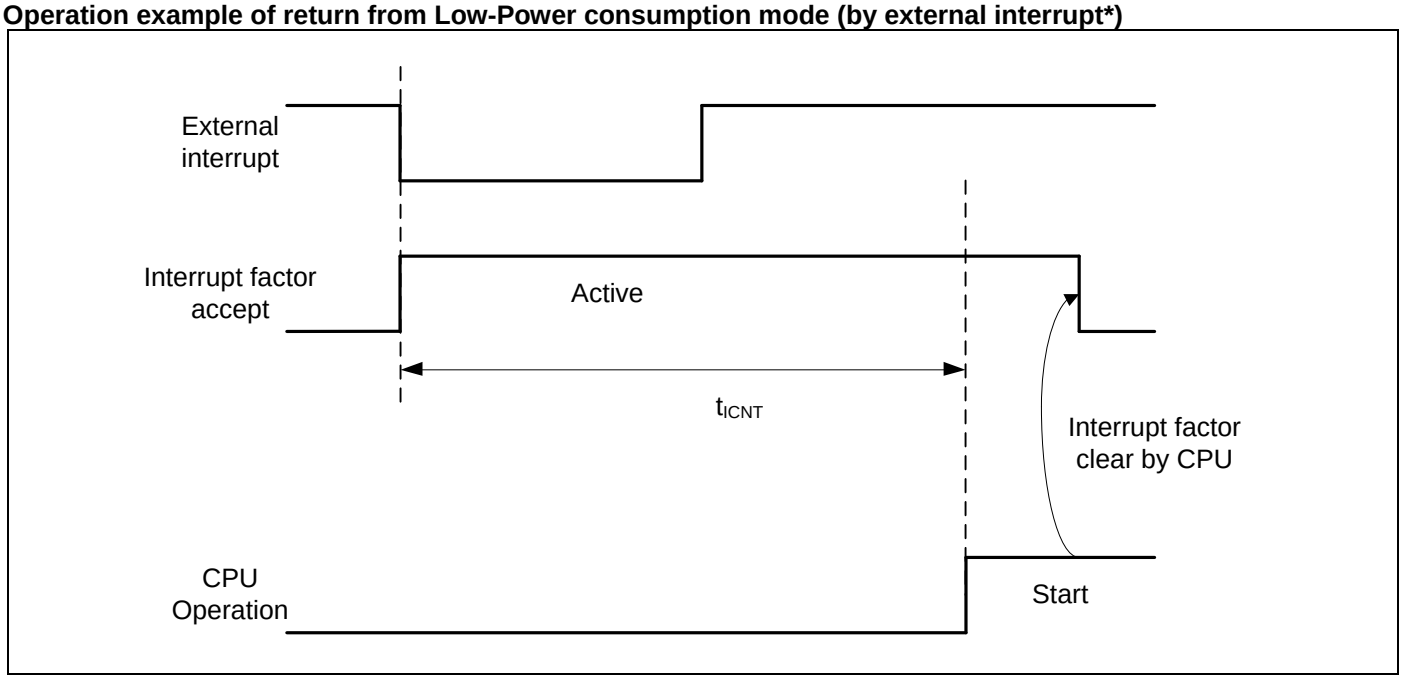

: External interrupt is set to detecting fall edge.

Operation example of return from Low-Power consumption mode (by internal resource interrupt*)

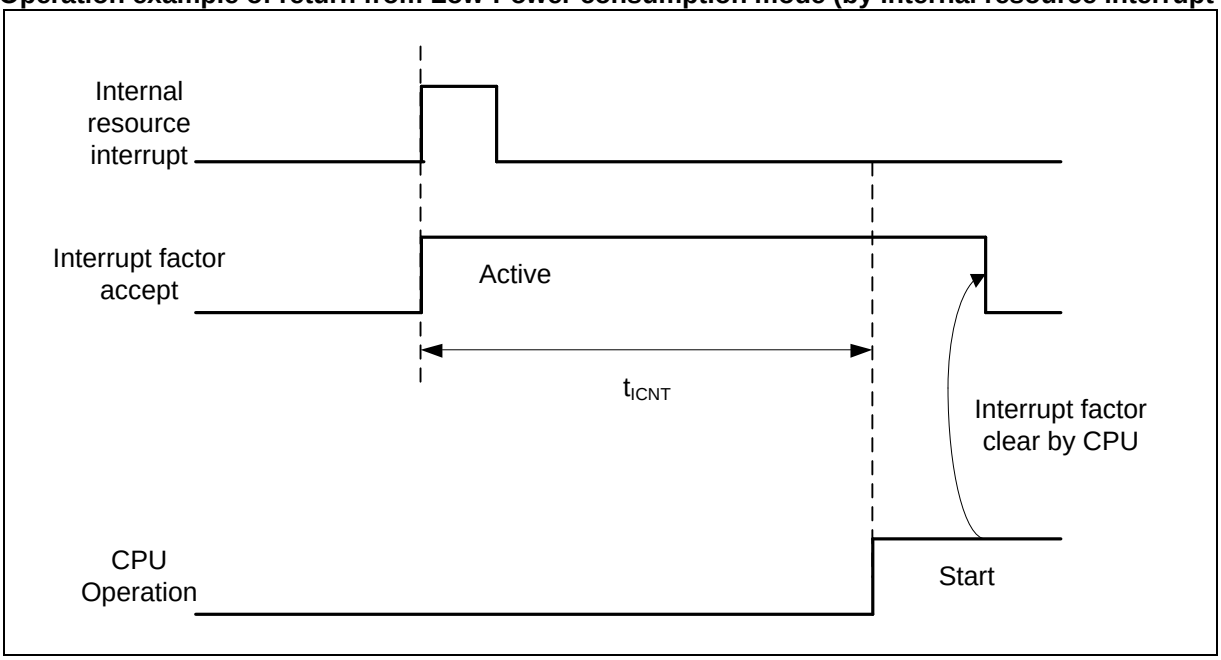

: Internal resource interrupt is not included in return factor by the kind of Low-Power consumption mode.

Notes:

- *When interrupt recoveries, the operation mode that CPU recoveries depend on the state before the Low-Power consumption mode transition. See Chapter 6: Low Power Consumption Mode in FM3 Family Peripheral Manual.*

12.10.2 *Return Factor: Reset*

The return time from Low-Power consumption mode is indicated as follows. It is from releasing reset to starting the program operation.

Return Count Time

(V_{CC} = 1.65V to 3.6V, V_{DDI} = 1.1V to 1.3V, V_{SS} = 0V, T_A = - 40°C to + 85°C)

Parameter	Symbol	Value		Unit	Remarks
		Typ	Max*		
Sleep mode	t_{RCNT}	148	263	µs	
High-speed CR Timer mode, Main Timer mode, PLL Timer mode		148	263	µs	
Low-speed CR Timer mode		258	483	µs	
Sub Timer mode		322	516	µs	
RTC/Stop mode		278	523	µs	
Deep Standby RTC mode		318	603	µs	When RAM is off
Deep Standby Stop mode		278	523	µs	When RAM is on

: The maximum value depends on the accuracy of built-in CR.

Operation example of return from Low-Power consumption mode (by INITX)

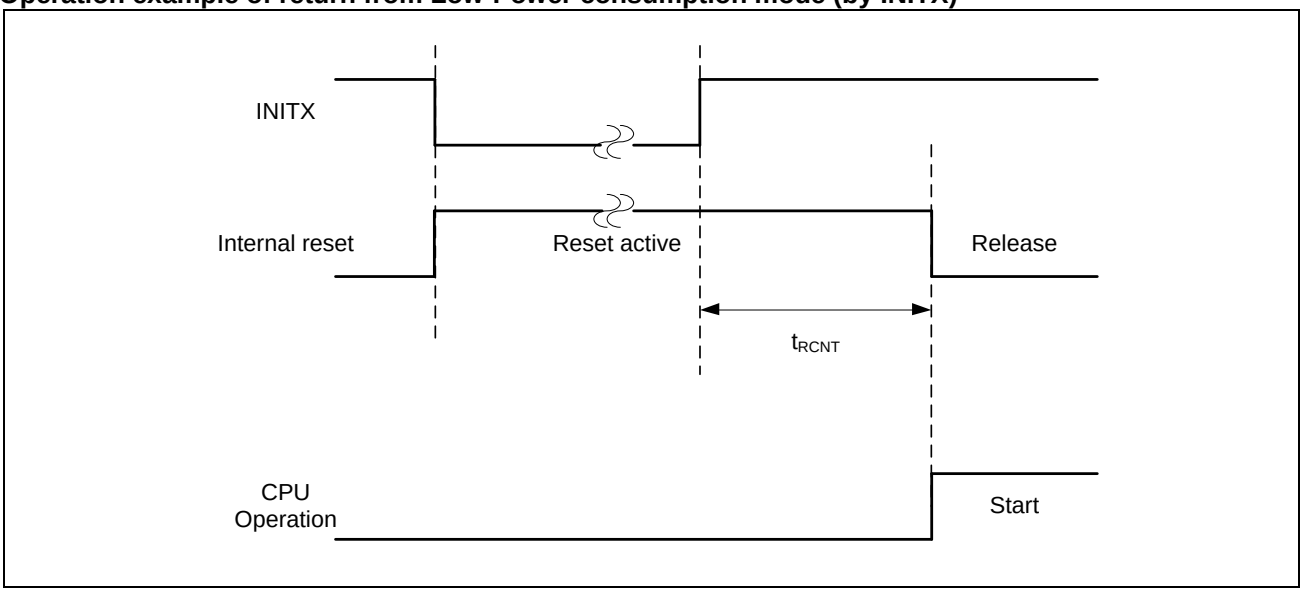

Operation example of return from low power consumption mode (by internal resource reset*)

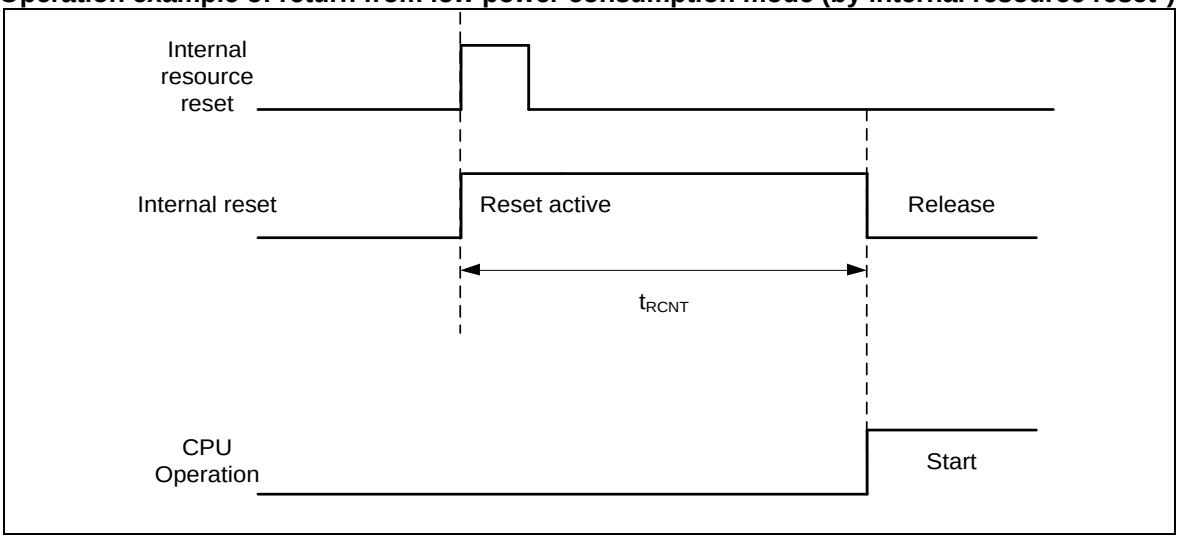

*: Internal resource reset is not included in return factor by the kind of Low-Power consumption mode.

Notes:

- *The return factor is different in each Low-Power consumption modes. See Chapter 6: Low Power Consumption Mode and Operations of Standby Modes in FM3 Family Peripheral Manual.*
- *When interrupt recoveries, the operation mode that CPU recoveries depend on the state before the Low-Power consumption mode transition. See Chapter 6: Low Power Consumption Mode in FM3 Family Peripheral Manual.*
- *The time during the power-on reset/low-voltage detection reset is excluded. See (6) Power-on Reset Timing in 4. AC Characteristics in Electrical Characteristics for the detail on the time during the power-on reset/low-voltage detection reset.*
- *When in recovery from reset, CPU changes to the High-speed CR Run mode. When using the main clock or the PLL clock, it is necessary to add the main clock oscillation stabilization wait time or the Main PLL clock stabilization wait time.*
- *The internal resource reset means the watchdog reset and the CSV reset.*

13. Ordering Information

Part number	On-chip Flash memory	On-chip SRAM	Package	Packing
CY9AFB41LBPMC1-G-JNE2	Main: 64 Kbyte Work: 32 Kbyte	16 Kbyte	Plastic・LQFP 64-pin (0.5mm pitch), (LQD064)	Tray
CY9AFB42LBPMC1-G-JNE2	Main: 128 Kbyte Work: 32 Kbyte	16 Kbyte		
CY9AFB44LBPMC1-G-JNE2	Main: 256 Kbyte Work: 32 Kbyte	32 Kbyte		
CY9AFB41LBPMC-G-JNE2	Main: 64 Kbyte Work: 32 Kbyte	16 Kbyte	Plastic・LQFP 64-pin (0.65mm pitch), (LQG064)	
CY9AFB42LBPMC-G-JNE2	Main: 128 Kbyte Work: 32 Kbyte	16 Kbyte		
CY9AFB44LBPMC-G-JNE2	Main: 256 Kbyte Work: 32 Kbyte	32 Kbyte		
CY9AFB41LBQN-G-AVE2	Main: 64 Kbyte Work: 32 Kbyte	16 Kbyte	Plastic・QFN 64-pin (0.5mm pitch), (VNC064)	
CY9AFB42LBQN-G-AVE2	Main: 128 Kbyte Work: 32 Kbyte	16 Kbyte		
CY9AFB44LBQN-G-AVE2	Main: 256 Kbyte Work: 32 Kbyte	32 Kbyte		
CY9AFB41MBPMC-G-JNE2	Main: 64 Kbyte Work: 32 Kbyte	16 Kbyte	Plastic・LQFP 80-pin (0.5mm pitch), (LQH080)	
CY9AFB42MBPMC-G-JNE2	Main: 128 Kbyte Work: 32 Kbyte	16 Kbyte		
CY9AFB44MBPMC-G-JNE2	Main: 256 Kbyte Work: 32 Kbyte	32 Kbyte		
CY9AFB41MBPMC1-G-JNE2	Main: 64 Kbyte Work: 32 Kbyte	16 Kbyte	Plastic・LQFP 80-pin (0.65mm pitch), (LQJ080)	
CY9AFB42MBPMC1-G-JNE2	Main: 128 Kbyte Work: 32 Kbyte	16 Kbyte		
CY9AFB44MBPMC1-G-JNE2	Main: 256 Kbyte Work: 32 Kbyte	32 Kbyte		
CY9AFB41MBBGL-GE1	Main: 64 Kbyte Work: 32 Kbyte	16 Kbyte	Plastic・PFBGA 96-pin (0.5mm pitch), (FDG096)	
CY9AFB42MBBGL-GE1	Main: 128 Kbyte Work: 32 Kbyte	16 Kbyte		
CY9AFB44MBBGL-GE1	Main: 256 Kbyte Work: 32 Kbyte	32 Kbyte		
CY9AFB41NBPMC-G-JNE2	Main: 64 Kbyte Work: 32 Kbyte	16 Kbyte	Plastic・LQFP 100-pin (0.5mm pitch), (LQI100)	
CY9AFB42NBPMC-G-JNE2	Main: 128 Kbyte Work: 32 Kbyte	16 Kbyte		
CY9AFB44NBPMC-G-JNE2	Main: 256 Kbyte Work: 32 Kbyte	32 Kbyte		
CY9AFB41NBPQC-G-JNE2	Main: 64 Kbyte Work: 32 Kbyte	16 Kbyte	Plastic・QFP 100-pin (0.65mm pitch), (PQH100)	Tray
CY9AFB42NBPQC-G-JNE2	Main: 128 Kbyte Work: 32 Kbyte	16 Kbyte		
CY9AFB44NBPQC-G-JNE2	Main: 256 Kbyte Work: 32 Kbyte	32 Kbyte		
CY9AFB41NBBGL-GE1	Main: 64 Kbyte Work: 32 Kbyte	16 Kbyte	Plastic・PFBGA 112-pin (0.8mm pitch), (LBC112)	
CY9AFB42NBBGL-GE1	Main: 128 Kbyte Work: 32 Kbyte	16 Kbyte		
CY9AFB44NBBGL-GE1	Main: 256 Kbyte Work: 32 Kbyte	32 Kbyte		

14. Package Dimensions

Package Type	Package Code
LQFP 100	LQI100

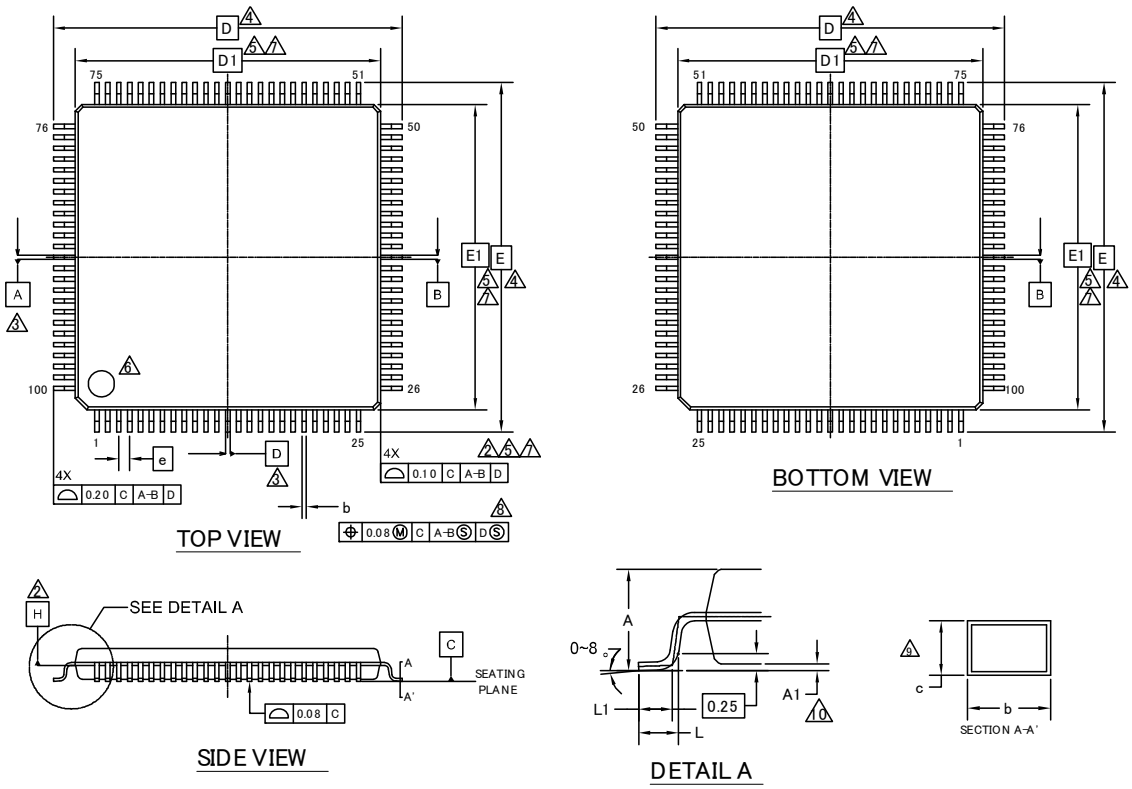

SYMBOL	DIMENSIONS		
	MIN.	NOM.	MAX.
A	—	—	1.70
A1	0.05	—	0.15
b	0.15	—	0.27
c	0.09	—	0.20
D	16.00 BSC		
D1	14.00 BSC		
e	0.50 BSC		
E	16.00 BSC		
E1	14.00 BSC		
L	0.45	0.60	0.75
L1	0.30	0.50	0.70

NOTES:

1. ALL DIMENSIONS ARE IN MILLIMETERS.
2. DATUM PLANE H IS LOCATED AT THE BOTTOM OF THE MOLD PARTING LINE COINCIDENT WITH WHERE THE LEAD EXITS THE BODY.
3. DATUMS A-B AND D TO BE DETERMINED AT DATUM PLANE H.
4. TO BE DETERMINED AT SEATING PLANE C.
5. DIMENSIONS D1 AND E1 DO NOT INCLUDE MOLD PROTRUSION. ALLOWABLE PROTRUSION IS 0.25mm PER SIDE. DIMENSIONS D1 AND E1 INCLUDE MOLD MISMATCH AND ARE DETERMINED AT DATUM PLANE H.
6. DETAILS OF PIN 1 IDENTIFIER ARE OPTIONAL BUT MUST BE LOCATED WITHIN THE ZONE INDICATED.
7. REGARDLESS OF THE RELATIVE SIZE OF THE UPPER AND LOWER BODY SECTIONS. DIMENSIONS D1 AND E1 ARE DETERMINED AT THE LARGEST FEATURE OF THE BODY EXCLUSIVE OF MOLD FLASH AND GATE BURRS. BUT INCLUDING ANY MISMATCH BETWEEN THE UPPER AND LOWER SECTIONS OF THE MOLDER BODY.
8. DIMENSION b DOES NOT INCLUDE DAMBAR PROTRUSION. THE DAMBAR PROTRUSION (S) SHALL NOT CAUSE THE LEAD WIDTH TO EXCEED b MAXIMUM BY MORE THAN 0.08mm. DAMBAR CANNOT BE LOCATED ON THE LOWER RADIUS OR THE LEAD FOOT.
9. THESE DIMENSIONS APPLY TO THE FLAT SECTION OF THE LEAD BETWEEN 0.10mm AND 0.25mm FROM THE LEAD TIP.
10. A1 IS DEFINED AS THE DISTANCE FROM THE SEATING PLANE TO THE LOWEST POINT OF THE PACKAGE BODY.

002-11500 *A

PACKAGE OUTLINE, 100 LEAD LQFP
14.0X14.0X1.7 MM LQI100 REV*A

Package Type	Package Code
QFP 100	PQH100

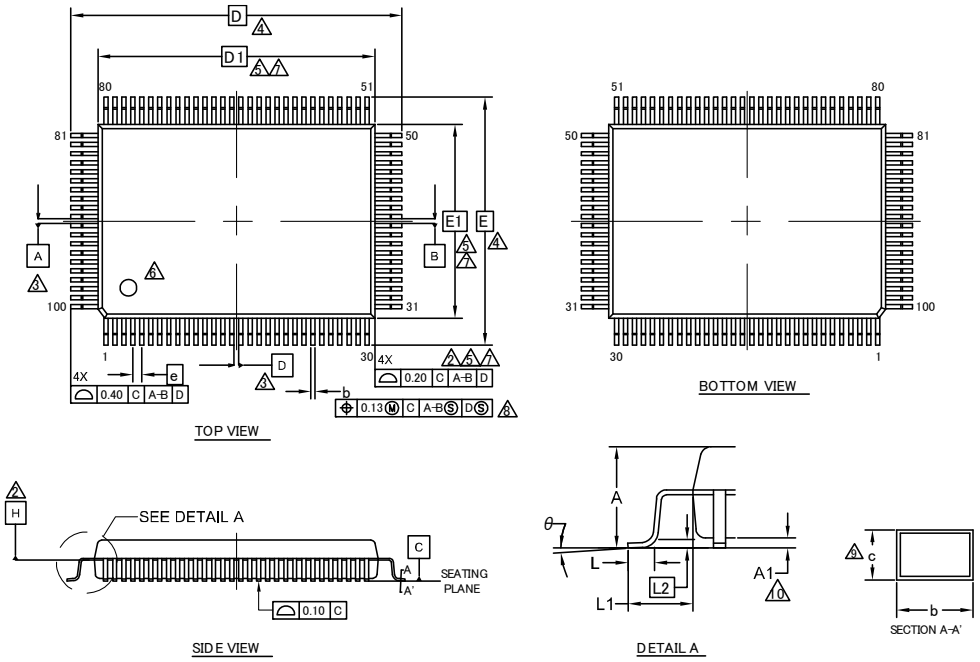

SYMBOL	DIMENSIONS		
	MIN.	NOM.	MAX.
A	—	—	3.35
A1	0.05	—	0.45
b	0.27	0.32	0.37
c	0.11	—	0.23
D	23.90 BSC		
D1	20.00 BSC		
e	0.65 BSC		
E	17.90 BSC		
E1	14.00 BSC		
θ	0°	—	8°
L	0.73	0.88	1.03
L1	1.95 REF		
L2	0.25 BSC		

NOTES

1. ALL DIMENSIONS ARE IN MILLIMETERS.
2. DATUM PLANE H IS LOCATED AT THE BOTTOM OF THE MOLD PARTING LINE COINCIDENT WITH WHERE THE LEAD EXITS THE BODY.
3. DATUMS A-B AND D TO BE DETERMINED AT DATUM PLANE H.
4. TO BE DETERMINED AT SEATING PLANE C.
5. DIMENSIONS D1 AND E1 DO NOT INCLUDE MOLD PROTRUSION. ALLOWABLE PROTRUSION IS 0.25mm PRE SIDE. DIMENSIONS D1 AND E1 INCLUDE MOLD MISMATCH AND ARE DETERMINED AT DATUM PLANE H.
6. DETAILS OF PIN 1 IDENTIFIER ARE OPTIONAL BUT MUST BE LOCATED WITHIN THE ZONE INDICATED.
7. REGARDLESS OF THE RELATIVE SIZE OF THE UPPER AND LOWER BODY SECTIONS. DIMENSIONS D1 AND E1 ARE DETERMINED AT THE LARGEST FEATURE OF THE BODY EXCLUSIVE OF MOLD FLASH AND GATE BURRS. BUT INCLUDING ANY MISMATCH BETWEEN THE UPPER AND LOWER SECTIONS OF THE MOLDER BODY.
8. DIMENSION b DOES NOT INCLUDE DAMBER PROTRUSION. THE DAMBAR PROTRUSION (S) SHALL NOT CAUSE THE LEAD WIDTH TO EXCEED b MAXIMUM BY MORE THAN 0.08mm. DAMBAR CANNOT BE LOCATED ON THE LOWER RADIUS OR THE LEAD FOOT.
9. THESE DIMENSIONS APPLY TO THE FLAT SECTION OF THE LEAD BETWEEN 0.10mm AND 0.25mm FROM THE LEAD TIP.
10. A1 IS DEFINED AS THE DISTANCE FROM THE SEATING PLANE TO THE LOWEST POINT OF THE PACKAGE BODY.

002-15156 **

PACKAGE OUTLINE, 100 LEAD QFP
20.00X14.00X3.35 MM PQH100 REV**

Package Type	Package Code
LQFP 80	LQH080

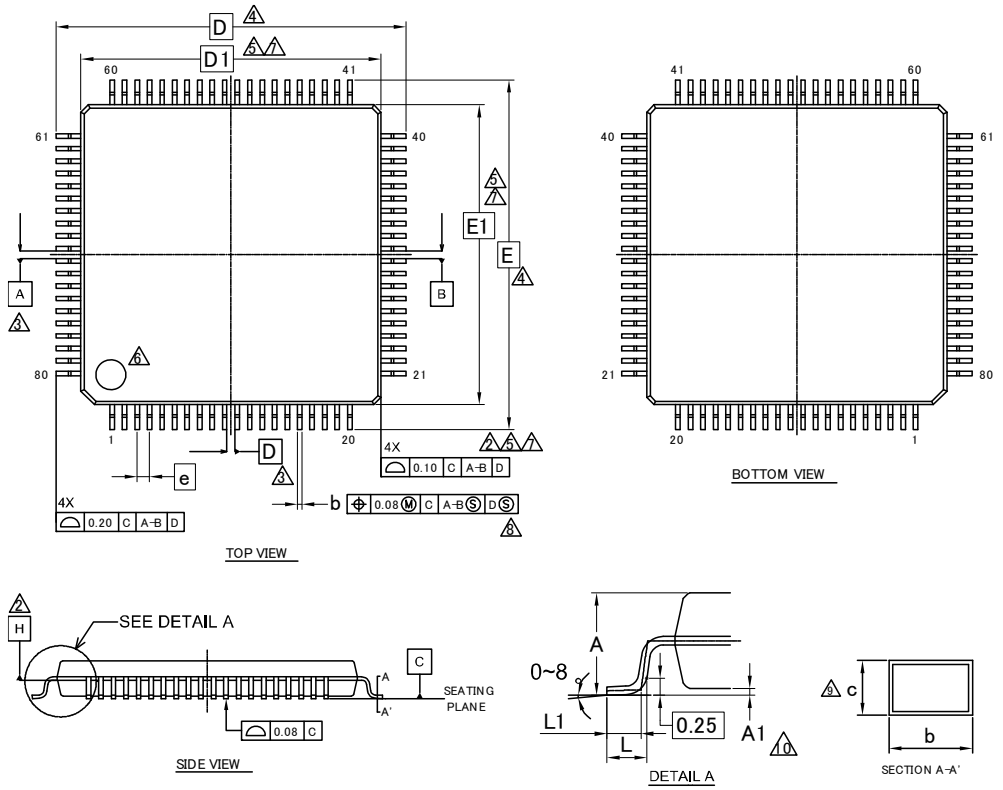

SYMBOL	DIMENSIONS		
	MIN.	NOM.	MAX.
A	—	—	1.70
A1	0.05	—	0.15
b	0.15	—	0.27
c	0.09	—	0.20
D	14.00 BSC.		
D1	12.00 BSC.		
e	0.50 BSC		
E	14.00 BSC.		
E1	12.00 BSC.		
L	0.45	0.60	0.75
L1	0.30	0.50	0.70

NOTES

1. CONTROLLING DIMENSIONS ARE IN MILLIMETERS (mm)
2. DATUM PLANE H IS LOCATED AT THE BOTTOM OF THE MOLD PARTING LINE COINCIDENT WITH WHERE THE LEAD EXITS THE BODY.
3. DATUMS A-B AND D TO BE DETERMINED AT DATUM PLANE H.
4. TO BE DETERMINED AT SEATING PLANE C.
5. DIMENSIONS D1 AND E1 DO NOT INCLUDE MOLD PROTRUSION. ALLOWABLE PROTRUSION IS 0.25mm PRE SIDE. DIMENSIONS D1 AND E1 INCLUDE MOLD MISMATCH AND ARE DETERMINED AT DATUM PLANE H.
6. DETAILS OF PIN 1 IDENTIFIER ARE OPTIONAL BUT MUST BE LOCATED WITHIN THE ZONE INDICATED.
7. REGARDLESS OF THE RELATIVE SIZE OF THE UPPER AND LOWER BODY SECTIONS. DIMENSIONS D1 AND E1 ARE DETERMINED AT THE LARGEST FEATURE OF THE BODY EXCLUSIVE OF MOLD FLASH AND GATE BURRS. BUT INCLUDING ANY MISMATCH BETWEEN THE UPPER AND LOWER SECTIONS OF THE MOLDER BODY.
8. DIMENSION b DOES NOT INCLUDE DAMBER PROTRUSION. THE DAMBAR PROTRUSION (S) SHALL NOT CAUSE THE LEAD WIDTH TO EXCEED b MAXIMUM BY MORE THAN 0.08mm. DAMBAR CANNOT BE LOCATED ON THE LOWER RADIUS OR THE LEAD FOOT.
9. THESE DIMENSIONS APPLY TO THE FLAT SECTION OF THE LEAD BETWEEN 0.10mm AND 0.25mm FROM THE LEAD TIP.
10. A1 IS DEFINED AS THE DISTANCE FROM THE SEATING PLANE TO THE LOWEST POINT OF THE PACKAGE BODY.

002-11501 **

PACKAGE OUTLINE, 80 LEAD LQFP
12.0X12.0X1.7 MM LQH080 Rev **

Package Type	Package Code
LQFP 80	LQJ080

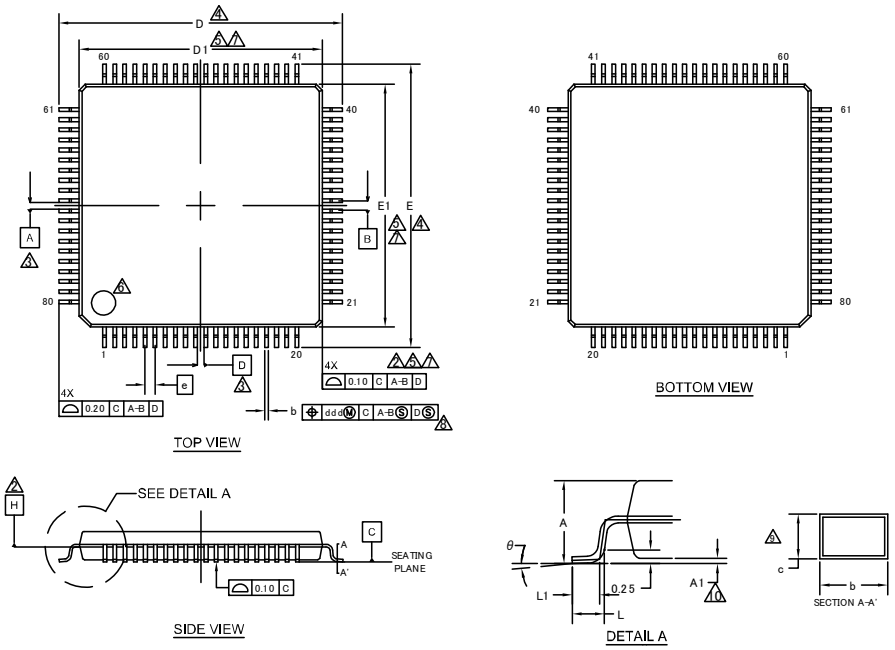

SYMBOL	DIMENSIONS		
	MIN.	NOM.	MAX.
A	—	—	1.70
A1	0.00	—	0.20
b	0.16	0.32	0.38
c	0.09	—	0.20
D	16.00 BSC		
D1	14.00 BSC		
e	0.65 BSC		
E	16.00 BSC		
E1	14.00 BSC		
L	0.45	0.60	0.75
L1	0.30	0.50	0.70
θ	0°	—	8°

NOTES

1. ALL DIMENSIONS ARE IN MILLIMETERS.
2. DATUM PLANE H IS LOCATED AT THE BOTTOM OF THE MOLD PARTING LINE COINCIDENT WITH WHERE THE LEAD EXITS THE BODY.
3. DATUMS A-B AND D TO BE DETERMINED AT DATUM PLANE H.
4. TO BE DETERMINED AT SEATING PLANE C.
5. DIMENSIONS D1 AND E1 DO NOT INCLUDE MOLD PROTRUSION. ALLOWABLE PROTRUSION IS 0.25mm PRE SIDE. DIMENSIONS D1 AND E1 INCLUDE MOLD MISMATCH AND ARE DETERMINED AT DATUM PLANE H.
6. DETAILS OF PIN 1 IDENTIFIER ARE OPTIONAL BUT MUST BE LOCATED WITHIN THE ZONE INDICATED.
7. REGARDLESS OF THE RELATIVE SIZE OF THE UPPER AND LOWER BODY SECTIONS. DIMENSIONS D1 AND E1 ARE DETERMINED AT THE LARGEST FEATURE OF THE BODY EXCLUSIVE OF MOLD FLASH AND GATE BURRS. BUT INCLUDING ANY MISMATCH BETWEEN THE UPPER AND LOWER SECTIONS OF THE MOLDER BODY.
8. DIMENSION b DOES NOT INCLUDE DAMBER PROTRUSION. THE DAMBAR PROTRUSION (S) SHALL NOT CAUSE THE LEAD WIDTH TO EXCEED b MAXIMUM BY MORE THAN 0.08mm. DAMBAR CANNOT BE LOCATED ON THE LOWER RADIUS OR THE LEAD FOOT.
9. THESE DIMENSIONS APPLY TO THE FLAT SECTION OF THE LEAD BETWEEN 0.10mm AND 0.25mm FROM THE LEAD TIP.
10. A1 IS DEFINED AS THE DISTANCE FROM THE SEATING PLANE TO THE LOWEST POINT OF THE PACKAGE BODY.

002-14043 **

PACKAGE OUTLINE, 80 LEAD LQFP
14.0X14.0X1.7 MM LQJ080 REV**

Package Type	Package Code
LQFP 64	LQD064

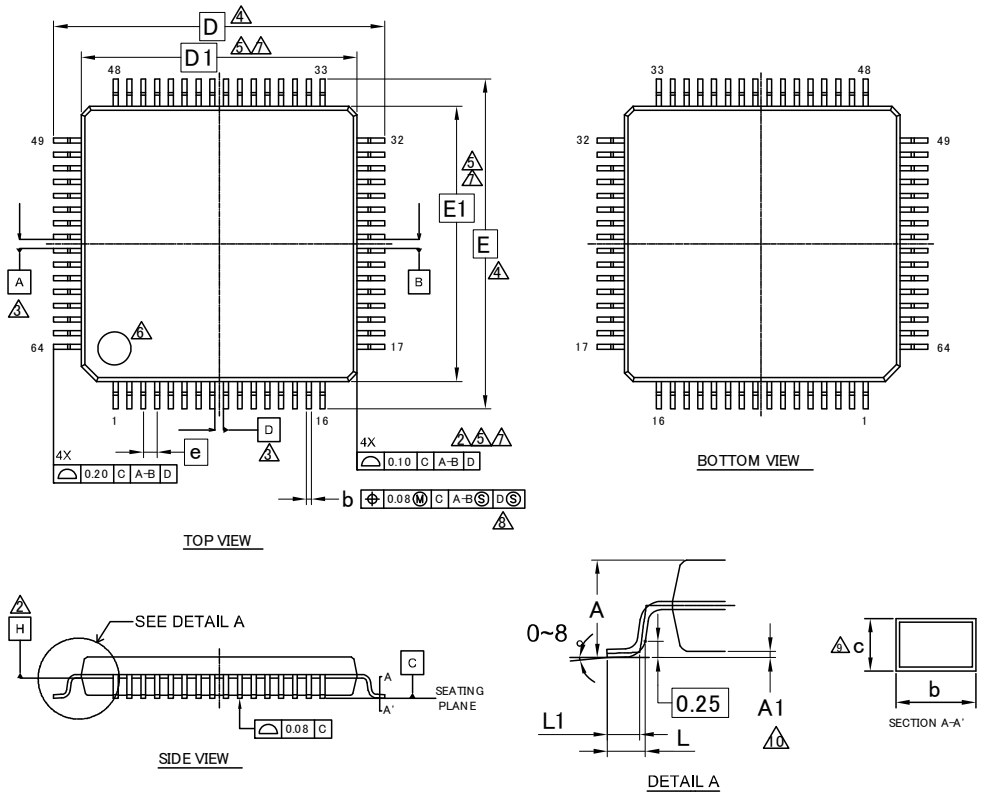

SYMBOL	DIMENSIONS		
	MIN.	NOM.	MAX.
A	—	—	1.70
A1	0.00	—	0.20
b	0.15	—	0.27
c	0.09	—	0.20
D	12.00 BSC.		
D1	10.00 BSC.		
e	0.50 BSC		
E	12.00 BSC.		
E1	10.00 BSC.		
L	0.45	0.60	0.75
L1	0.30	0.50	0.70

NOTES

1. ALL DIMENSIONS ARE IN MILLIMETERS.
2. DATUM PLANE H IS LOCATED AT THE BOTTOM OF THE MOLD PARTING LINE COINCIDENT WITH WHERE THE LEAD EXITS THE BODY.
3. DATUMS A-B AND D TO BE DETERMINED AT DATUM PLANE H.
4. TO BE DETERMINED AT SEATING PLANE C.
5. DIMENSIONS D1 AND E1 DO NOT INCLUDE MOLD PROTRUSION. ALLOWABLE PROTRUSION IS 0.25mm PRE SIDE. DIMENSIONS D1 AND E1 INCLUDE MOLD MISMATCH AND ARE DETERMINED AT DATUM PLANE H.
6. DETAILS OF PIN 1 IDENTIFIER ARE OPTIONAL BUT MUST BE LOCATED WITHIN THE ZONE INDICATED.
7. REGARDLESS OF THE RELATIVE SIZE OF THE UPPER AND LOWER BODY SECTIONS. DIMENSIONS D1 AND E1 ARE DETERMINED AT THE LARGEST FEATURE OF THE BODY EXCLUSIVE OF MOLD FLASH AND GATE BURRS. BUT INCLUDING ANY MISMATCH BETWEEN THE UPPER AND LOWER SECTIONS OF THE MOLDER BODY.
8. DIMENSION b DOES NOT INCLUDE DAMBER PROTRUSION. THE DAMBAR PROTRUSION (S) SHALL NOT CAUSE THE LEAD WIDTH TO EXCEED b MAXIMUM BY MORE THAN 0.08mm. DAMBAR CANNOT BE LOCATED ON THE LOWER RADIUS OR THE LEAD FOOT.
9. THESE DIMENSIONS APPLY TO THE FLAT SECTION OF THE LEAD BETWEEN 0.10mm AND 0.25mm FROM THE LEAD TIP.
10. A1 IS DEFINED AS THE DISTANCE FROM THE SEATING PLANE TO THE LOWEST POINT OF THE PACKAGE BODY.

002-11499 **

PACKAGE OUTLINE, 64 LEAD LQFP
10.0X10.0X1.7 MM LQD064 Rev**

Package Type	Package Code
LQFP 64	LQG064

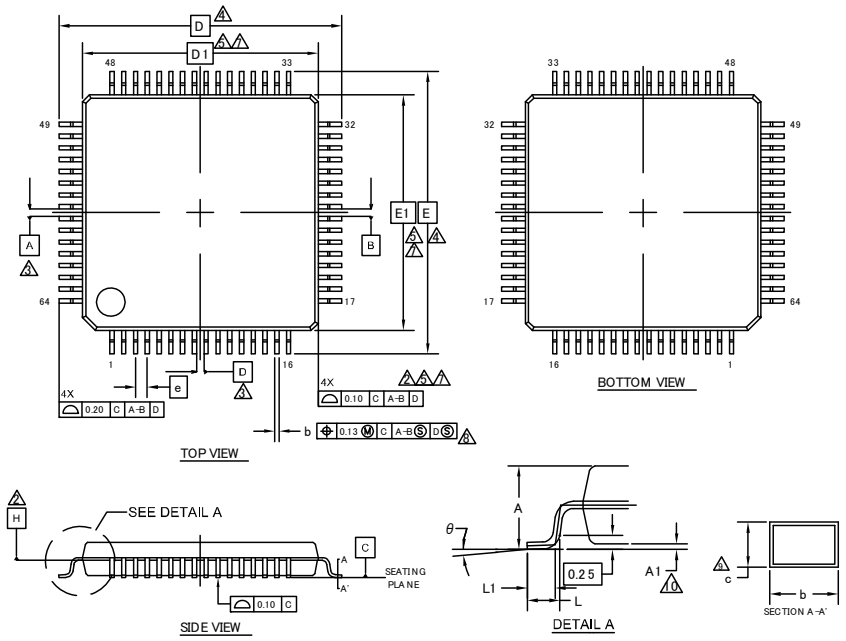

SYMBOL	DIMENSION		
	MIN.	NOM.	MAX.
A	—	—	1.70
A1	0.00	—	0.20
b	0.27	0.32	0.37
c	0.09	—	0.20
D	14.00 BSC		
D1	12.00 BSC		
e	0.65 BSC		
E	14.00 BSC		
E1	12.00 BSC		
L	0.45	0.60	0.75
L1	0.30	0.50	0.70
θ	0°	—	8°

NOTES

1. ALL DIMENSIONS ARE IN MILLIMETERS.
2. DATUM PLANE H IS LOCATED AT THE BOTTOM OF THE MOLD PARTING LINE COINCIDENT WITH WHERE THE LEAD EXITS THE BODY.
3. DATUMS A-B AND D TO BE DETERMINED AT DATUM PLANE H.
4. TO BE DETERMINED AT SEATING PLANE C.
5. DIMENSIONS D1 AND E1 DO NOT INCLUDE MOLD PROTRUSION. ALLOWABLE PROTRUSION IS 0.25mm PRE SIDE. DIMENSIONS D1 AND E1 INCLUDE MOLD MISMATCH AND ARE DETERMINED AT DATUM PLANE H.
6. DETAILS OF PIN 1 IDENTIFIER ARE OPTIONAL BUT MUST BE LOCATED WITHIN THE ZONE INDICATED.
7. REGARDLESS OF THE RELATIVE SIZE OF THE UPPER AND LOWER BODY SECTIONS. DIMENSIONS D1 AND E1 ARE DETERMINED AT THE LARGEST FEATURE OF THE BODY EXCLUSIVE OF MOLD FLASH AND GATE BURRS. BUT INCLUDING ANY MISMATCH BETWEEN THE UPPER AND LOWER SECTIONS OF THE MOLDER BODY.
8. DIMENSION b DOES NOT INCLUDE DAMBER PROTRUSION. THE DAMBAR PROTRUSION (S) SHALL NOT CAUSE THE LEAD WIDTH TO EXCEED b MAXIMUM BY MORE THAN 0.08mm. DAMBAR CANNOT BE LOCATED ON THE LOWER RADIUS OR THE LEAD FOOT.
9. THESE DIMENSIONS APPLY TO THE FLAT SECTION OF THE LEAD BETWEEN 0.10mm AND 0.25mm FROM THE LEAD TIP.
10. A1 IS DEFINED AS THE DISTANCE FROM THE SEATING PLANE TO THE LOWEST POINT OF THE PACKAGE BODY.

002-13881 **

PACKAGE OUTLINE, 64 LEAD LQFP
12.0X12.0X1.7 MM LQG064 REV**

Package Type	Package Code
QFN 64	VNC064

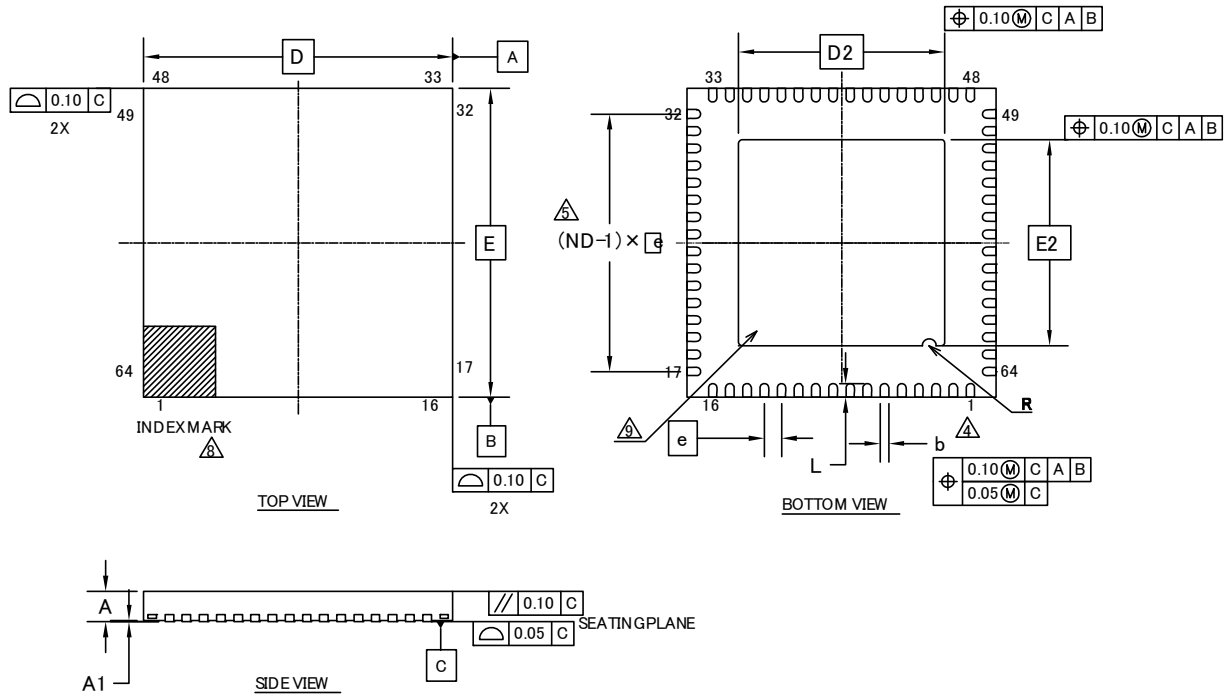

SYMBOL	DIMENSIONS		
	MIN.	NOM.	MAX.
A	—	—	0.90
A1	0.00	—	0.05
D	9.00 BSC		
E	9.00 BSC		
b	0.20	0.25	0.30
D2	6.00 BSC		
E2	6.00 BSC		
e	0.50 BSC		
R	0.20 REF		
L	0.35	0.40	0.45
N	64		
ND	16		

NOTES:

1. ALL DIMENSIONS ARE IN MILLIMETERS.
2. DIMENSIONING AND TOLERANCING CONFORMS TO ASME Y14.5M-1994.
3. N IS THE TOTAL NUMBER OF TERMINALS.
4. DIMENSION "b" APPLIES TO METALLIZED TERMINAL AND IS MEASURED BETWEEN 0.15 AND 0.30mm FROM TERMINAL TIP. IF THE TERMINAL HAS THE OPTIONAL RADIUS ON THE OTHER END OF THE TERMINAL, THE DIMENSION "b" SHOULD NOT BE MEASURED IN THAT RADIUS AREA.
5. ND REFERS TO THE NUMBER OF TERMINALS ON D SIDE OR E SIDE.
6. MAX. PACKAGE WARPAGE IS 0.05mm.
7. MAXIMUM ALLOWABLE BURR IS 0.076mm IN ALL DIRECTIONS.
8. PIN #1 ID ON TOP WILL BE LOCATED WITHIN THE INDICATED ZONE.
9. BILATERAL COPLANARITY ZONE APPLIES TO THE EXPOSED HEAT SINK SLUG AS WELL AS THE TERMINALS.

002-13234 **

PACKAGE OUTLINE, 64 LEAD QFN
9.0X9.0X0.9 MM VNC064 6.0X6.0 MM EPAD (SAWN) Rev.**

Package Type	Package Code
FBGA 112	LBC112

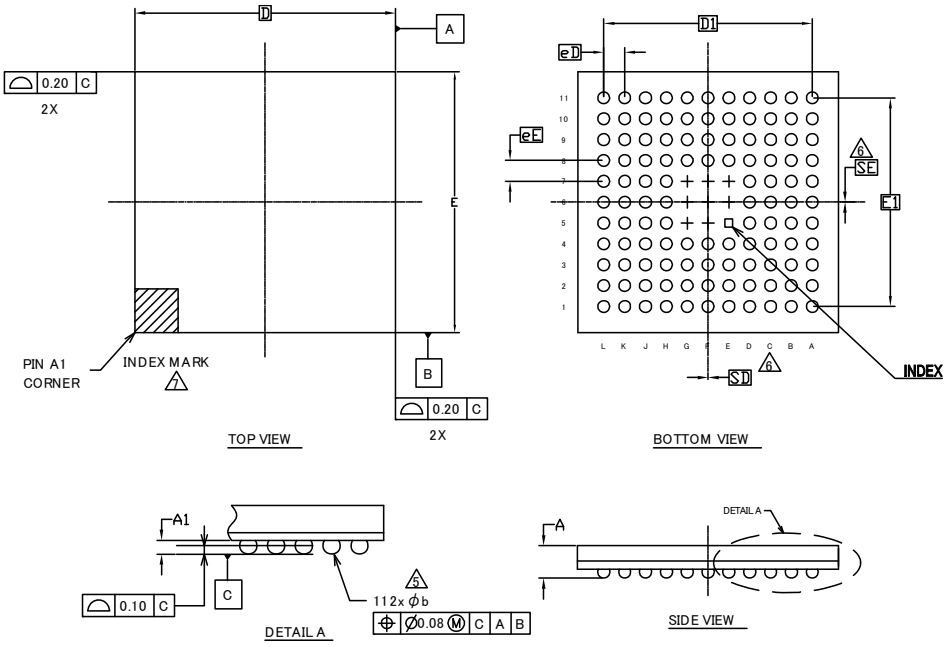

SYMBOL	DIMENSIONS		
	MIN.	NOM.	MAX.
A	–	–	1.45
A1	0.25	0.35	0.45
D	10.00 BSC		
E	10.00 BSC		
D1	8.00 BSC		
E1	8.00 BSC		
MD	11		
ME	11		
N	112		
Ø b	0.35	0.45	0.55
eD	0.80 BSC		
eE	0.80 BSC		
SD	0.00		
SE	0.00		

NOTES:

1. ALL DIMENSIONS ARE IN MILLIMETERS.
2. SOLDER BALL POSITION DESIGNATIO N PER JEP95, SECTION 3, SPP-020.
3. "e" REPRESENTS THE SOLDER BALL GRID PITCH.
4. SYMBOL "MD" IS THE BALL MATRIX SIZE IN THE "D" DIRECTION.
   SYMBOL "ME" IS THE BALL MATRIX SIZE IN THE "E" DIRECTION.
   N IS THE NUMBER OF POPULATED SOLDER BALL POSITIONS FOR MATRIX SIZE MD X ME.
5. DIMENSION "b" IS MEASURED AT THE MAXIMUM BALL DIAMETER IN A PLANE PARALLEL TO DATUM C.
6. "SD" AND "SE" ARE MEASURED WITH RESPECT TO DATUMS A AND B AND DEFINE THE POSITION OF THE CENTER SOLDER BALL IN THE OUTER ROW.
   WHEN THERE IS AN ODD NUMBER OF SOLDER BALLS IN THE OUTER ROW, "SD" OR "SE" = 0.
   WHEN THERE IS AN EVEN NUMBER OF SOLDER BALLS IN THE OUTER ROW, "SD" = eD/2 AND "SE" = eE/2.
7. A1 CORNER TO BE IDENTIFIED BY CHAMFER, LASER OR INK MARK METALIZED MARK, INDENTATION OR OTHER MEANS.
8. "+" INDICATES THE THEORETICAL CENTER OF DEPOPULATED SOLDER BALLS.

002-13225 **

PACKAGE OUTLINE, 112 BALL FBGA
10.00X10.00X1.45 MM LBC112 REV**

Package Type	Package Code
FBGA 96	FDG096

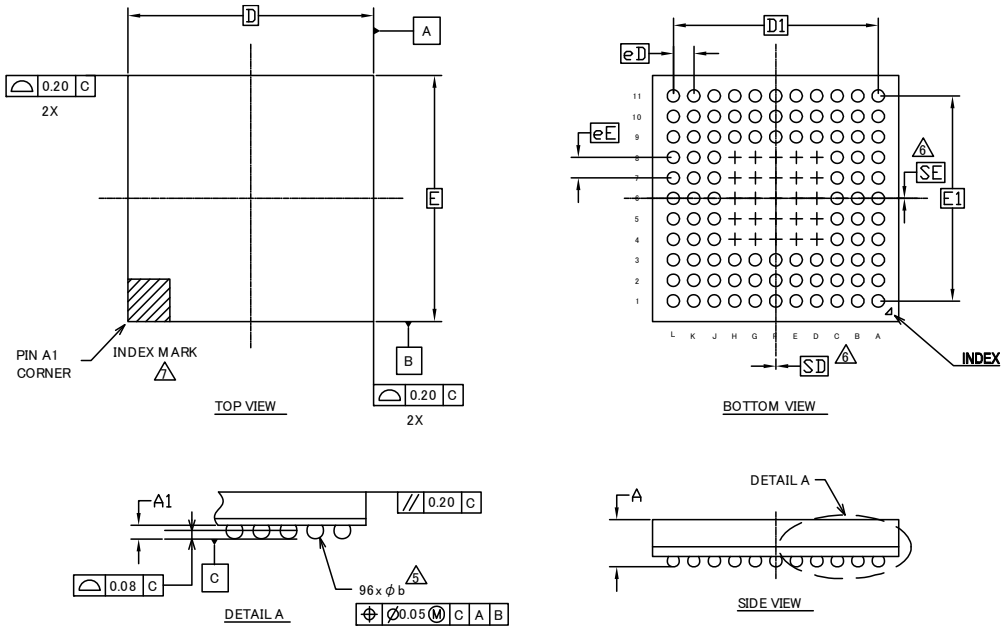

SYMBOL	DIMENSIONS		
	MIN.	NOM.	MAX.
A	–	–	1.30
A1	0.15	0.25	0.35
D	6.00 BSC		
E	6.00 BSC		
D1	5.00 BSC		
E1	5.00 BSC		
MD	11		
ME	11		
N	96		
∅ b	0.20	0.30	0.40
eD	0.50 BSC		
eE	0.50 BSC		
SD	0.00		
SE	0.00		

NOTES:

1. ALL DIMENSIONS ARE IN MILLIMETERS.
2. SOLDER BALL POSITION DESIGNATIO N PER JEP95, SECTION 3, SPP-020.
3. "e" REPRESENTS THE SOLDER BALL GRID PITCH.
4. SYMBOL "MD" IS THE BALL MATRIX SIZE IN THE "D" DIRECTION.
   SYMBOL "ME" IS THE BALL MATRIX SIZE IN THE "E" DIRECTION.
   N IS THE NUMBER OF POPULATED SOLDER BALL POSITIONS FOR MATRIX SIZE MD X ME.
5. DIMENSION "b" IS MEASURED AT THE MAXIMUM BALL DIAMETER IN A PLANE PARALLEL TO DATUM C.
6. "SD" AND "SE" ARE MEASURED WITH RESPECT TO DATUMS A AND B AND DEFINE THE POSITION OF THE CENTER SOLDER BALL IN THE OUTER ROW.
   WHEN THERE IS AN ODD NUMBER OF SOLDER BALLS IN THE OUTER ROW, "SD" OR "SE" = 0.
   WHEN THERE IS AN EVEN NUMBER OF SOLDER BALLS IN THE OUTER ROW, "SD" = eD/2 AND "SE" = eE/2.
7. A1 CORNER TO BE IDENTIFIED BY CHAMFER, LASER OR INK MARK METALIZED MARK, INDENTATION OR OTHER MEANS.
8. "+" INDICATES THE THEORETICAL CENTER OF DEPOPULATED SOLDER BALLS.

002-13224 **

PACKAGE OUTLINE, 96 BALL FBGA
6.0X6.0X1.3 MM FDG096 REV**

15. Errata

This chapter describes the errata for CY9AB40N, CY9AB40NA and CY9AB40NB series. Details include errata trigger conditions, scope of impact, available workaround, and silicon revision applicability.

Contact your local Cypress Sales Representative if you have questions.

15.1 Part Numbers Affected

Part Number
Initial Revision
CY9AFB41NPMC-G-JNE2, CY9AFB42NPMC-G-JNE2, CY9AFB44NPMC-G-JNE2, CY9AFB41NPQC-G-JNE2, CY9AFB42NPQC-G-JNE2, CY9AFB44NPQC-G-JNE2, CY9AFB41NBGL-GE1, CY9AFB42NBGL-GE1, CY9AFB44NBGL-GE1, CY9AFB41MPMC-G-JNE2, CY9AFB42MPMC-G-JNE2, CY9AFB44MPMC-G-JNE2, CY9AFB41MPMC1-G-JNE2, CY9AFB42MPMC1-G-JNE2, CY9AFB44MPMC1-G-JNE2, CY9AFB41MBGL-GE1, CY9AFB42MBGL-GE1, CY9AFB44MBGL-GE1, CY9AFB41LPMC1-G-JNE2, CY9AFB42LPMC1-G-JNE2, CY9AFB44LPMC1-G-JNE2, CY9AFB41LPMC-G-JNE2, CY9AFB42LPMC-G-JNE2, CY9AFB44LPMC-G-JNE2, CY9AFB41LQN-G-AVE2, CY9AFB42LQN-G-AVE2, CY9AFB44LQN-G-AVE2
Rev. A
CY9AFB41NAPMC-G-JNE2, CY9AFB42NAPMC-G-JNE2, CY9AFB44NAPMC-G-JNE2, CY9AFB41NAPQC-G-JNE2, CY9AFB42NAPQC-G-JNE2, CY9AFB44NAPQC-G-JNE2, CY9AFB41NABGL-GE1, CY9AFB42NABGL-GE1, CY9AFB44NABGL-GE1, CY9AFB41MAPMC-G-JNE2, CY9AFB42MAPMC-G-JNE2, CY9AFB44MAPMC-G-JNE2, CY9AFB41MAPMC1-G-JNE2, CY9AFB42MAPMC1-G-JNE2, CY9AFB44MAPMC1-G-JNE2, CY9AFB41MABGL-GE1, CY9AFB42MABGL-GE1, CY9AFB44MABGL-GE1, CY9AFB41LAPMC1-G-JNE2, CY9AFB42LAPMC1-G-JNE2, CY9AFB44LAPMC1-G-JNE2, CY9AFB41LAPMC-G-JNE2, CY9AFB42LAPMC-G-JNE2, CY9AFB44LAPMC-G-JNE2, CY9AFB41LAQN-G-AVE2, CY9AFB42LAQN-G-AVE2, CY9AFB44LAQN-G-AVE2
Rev. B
CY9AFB41NBPMC-G-JNE2, CY9AFB42NBPMC-G-JNE2, CY9AFB44NBPMC-G-JNE2, CY9AFB41NBPQC-G-JNE2, CY9AFB42NBPQC-G-JNE2, CY9AFB44NBPQC-G-JNE2, CY9AFB41NBBGL-GE1, CY9AFB42NBBGL-GE1, CY9AFB44NBBGL-GE1, CY9AFB41MBPMC-G-JNE2, CY9AFB42MBPMC-G-JNE2, CY9AFB44MBPMC-G-JNE2, CY9AFB41MBPMC1-G-JNE2, CY9AFB42MBPMC1-G-JNE2, CY9AFB44MBPMC1-G-JNE2, CY9AFB41MBBGL-GE1, CY9AFB42MBBGL-GE1, CY9AFB44MBBGL-GE1, CY9AFB41LBPMC1-G-JNE2, CY9AFB42LBPMC1-G-JNE2, CY9AFB44LBPMC1-G-JNE2, CY9AFB41LBPMC-G-JNE2, CY9AFB42LBPMC-G-JNE2, CY9AFB44LBPMC-G-JNE2, CY9AFB41LBQN-G-AVE2, CY9AFB42LBQN-G-AVE2, CY9AFB44LBQN-G-AVE2,

15.2 Qualification Status

Product Status: In Production − Qual.

15.3 Errata Summary

This table defines the errata applicability to available devices.

Items	Part Number	Silicon Revision	Fix Status
[1] FLASH lower bank read during write	Refer to 15.1	Initial rev.	Fixed in Rev. A
[2] FLASH read during write & erase suspend	Refer to 15.1	Initial rev.	Fixed in Rev. A
[3] Regulator issue	Refer to 15.1	Initial rev., Rev. A	Fixed in Rev. B
[4] HDMI-CEC arbitration lost issue	Refer to 15.1	Initial rev., Rev. A	Fixed in Rev. B
[5] HDMI-CEC polling message issue	Refer to 15.1	Initial rev., Rev. A , Rev. B	Next silicon is not planned

1. FLASH lower bank read during write

■ PROBLEM DEFINITION

During writing (programming) to FLASH memory of an upper bank, FLASH memory of a lower bank could not be read at a specific timing in some operation combinations.

■ PARAMETERS AFFECTED

N/A

■ TRIGGER CONDITION(S)

This issue may happen when read data or fetch instruction from the FLASH memory lower bank (smaller sector), while a write (program) operation to the FLASH memory upper bank (larger sector) is in progress.

■ SCOPE OF IMPACT

Instructions could not be fetched (read) correctly from the lower bank, and then execution of the (corrupted) instructions may cause a hard fault or run-away. If an instruction in RAM reads a data from the lower bank while writing to the upper bank, an incorrect value might be read.

■ WORKAROUND

To rewrite the upper bank of FLASH memory, put the write instruction in RAM instead of the lower bank and execute it from the RAM. Do not access the lower bank until the write operation is completed (RDY=1). Especially to avoid a vector fetch from the lower bank of the FLASH memory by an interrupt occurred, the interrupt should be prohibited or the vector address should be set to RAM by the vector table offset register.

■ FIX STATUS

This issue was fixed in Rev. A.

2. FLASH Read during Write & Sector Erase Suspend

■ PROBLEM DEFINITION

When writing is executed during sector erase suspend, FLASH memory could not be read correctly at a specific timing.

■ PARAMETERS AFFECTED

N/A

■ TRIGGER CONDITION(S)

This issue may happen when read data or fetch instruction from the FLASH memory bank (higher or lower), while a write (program) operation is in progress to the opposite bank which has a sector erase suspended. The following flow could not be executed correctly.

(a) Erase a sector of a bank

(b) Suspend the sector erase operation

(c) Write to a different sector of the bank

(d) Execute an instruction or read data in the opposite bank

- SCOPE OF IMPACT
- Instructions could not be fetched (read) correctly, and then execution of the (corrupted) instructions may cause a hard fault or run-away. If an instruction in RAM reads a data from the bank, an incorrect value might be read.
- WORKAROUND
  Do not execute the write operation to a different sector in the same bank at sector erase suspend.
- FIX STATUS
  This issue was fixed in Rev. A.

3. Regulator issue

- PROBLEM DEFINITION
  The regulator does not get initialized while internal power-up sequence.
- PARAMETERS AFFECTED
  N/A
- TRIGGER CONDITION(S)
  This issue rarely happens depending on states of internal circuits which the user cannot control.
- SCOPE OF IMPACT
  MCU does not start operation if this issue occurs.
- WORKAROUND
  This error cannot be avoided by any software.
- FIX STATUS
  This issue was fixed in Rev. B.

4. HDMI-CEC arbitration lost issue

- PROBLEM DEFINITION
  Large external load on CEC bus may cause arbitration lost.
- PARAMETERS AFFECTED
  N/A
- TRIGGER CONDITION(S)
  The arbitration lost detection mechanism samples outputting signals and determines that arbitration lost occurs if sampled signals do not match the outputting signals. The large external load on the CEC bus increases slew rate of the signals. The increased slew rate makes the mismatch between outputting signals and sampled signals and the mismatch misleads MCU that arbitration lost occurs.
- SCOPE OF IMPACT
  Once the arbitration lost is detected, the CEC aborts the transmission. Any transmission cannot be completed.
- WORKAROUND
- This error cannot be avoided by any software. Reduce the external load.
- FIX STATUS
- This issue was fixed in Rev. B.

5. HDMI-CEC polling message issue

■ PROBLEM DEFINITION

Error#1) While MCU sends a Polling Message, it always returns a NACK to a message coming to the MCU from another node.

Error#2) MCU always waits for 7-bit signal free on CEC line before it drives the line even when the last line initiator was another node.

■ PARAMETERS AFFECTED

N/A

■ TRIGGER CONDITION(S)

This error always happens.

■ SCOPE OF IMPACT

MCU does not reply properly to another node.

■ WORKAROUND

The software workaround is applied to Error #1.

1. Store 0x0 to SFREE register.
2. Monitor CEC line with GPIO and wait until 1 lasts for the signal free time.
3. Store frame data to TXDATA register and store 0x0F to RCADR1 or RCADR2 register.

It sends a message after 3~4 clocks of 32.768 kHz clock when TXDATA is stored 0x0F.

If the device receives a frame from another node within 2~3 clocks after storing TXDATA, the bus error occurs and if the device receives a frame from another node within 3~4 clocks after storing TXDATA, the arbitration lost occurs. In these cases:

4-A-1. Set RCADR1 or RCADR2 to former value from 0x0F to reply ACK

4-A-2. Return back to step 2 above

If the device receives a frame from another node within 1~2 clocks after storing TXDATA, take these steps.

4-B-1. Monitor CEC line with GPIO after 50us from storing TXDATA

4-B-2. Set TXEN to 1 -> 0 -> 1 immediately when GPIO finds state low on the CEC line

4-B-3. Set RCADR1 or RCADR2 to former value from 0x0F to reply ACK

4-B-4. Return back to step 2 above

For Error #2, there is no software workaround, but signal free time of fixed 7-bit does not violate HDMI-CEC specification. The specification says signal free time must be more than and equals to 5-bit.

■ FIX STATUS

The user uses the workaround to avoid the issue. The next silicon fixing the issue is not planned.

16. Major Changes

Spansion Publication Number: DS706-00034

Page	Section	Change Results
Revision 2.0		
2	■FEATURE ・On-chip Memories	Revised the descriptions of [Flash memory].
	・USB Interface	Revised the descriptions of [USB function].
6	・Unique ID	Added the descriptions of "Unique ID".
7	■PRODUCT LINEUP ・Function	
52	■HANDLING DEVICES	Added the descriptions.
57	■MEMORY MAP ・Memory Map (2)	
62	■PIN STATUS IN EACH CPU STATE ・List of Pin Status	Revised the Pin status type of "I".
70	■ELECTRICAL CHARACTERISTICS 3.DC Characteristics (1) Current rating	・Revised the descriptions of Power supply current. ・Added the "Flash memory write/erase current". ・Added the footnote.
74	5.AC Characteristics (3) Built-in CR Oscillation Characteristics ・Built-in high-speed CR	Revised the table and the footnote.
78, 79	(7) External Bus Timing ・Separate Bus Access Asynchronous SRAM Mode	Revised the table and the figure.
80	・Separate Bus Access Synchronous SRAM Mode	
85, 87, 89, 91	(9) CSIO Timing	・Revised the title to "CSIO Timing". ・Revised the note.
94	(11) I^2C Timing	Revised the footnote.
97	6. 12-bit A/D Converter ・Electrical Characteristics for the A/D Converter	• Revised the parameter. • Revised the symbol. • Corrected the value.
99	・Definition of 12-bit A/D Converter Terms	• Revised the parameter. • Revised the symbol.
104	8. Low-Voltage Detection Characteristics (1) Low-Voltage Detection Reset	• Corrected "Conditions" and "Value" in the table. • Added the Item. • Added the footnote.
105	(2) Interrupt of Low-Voltage Detection	Added the Item.
Revision 2.1		
-	-	Company name and layout design change
Revision 3.0		
-	-	Corrected the Series name. MB9AB40NA Series → MB9AB40NB Series
-	-	Corrected the Product name as follows. MB9AFB44LB, MB9AFB42LB, MB9AFB41LB MB9AFB44MB, MB9AFB42MB, MB9AFB41MB MB9AFB44NB, MB9AFB42NB, MB9AFB41NB
2	■ FEATURES •External Bus Interface	Added the Item. • Maximum area size : Up to 256 Mbytes
3	•Multi-function Serial Interface	Corrected the description of "I^2C"
7	■PRODUCT LINEUP •Function	Added the footnote
55	■BLOCK DIAGRAM	Corrected the figure
56	■MEMORY MAP •Memory Map (1)	Corrected the address "External Device Area"
68	■ ELECTRICAL CHARACTERISTICS 2.Recommended Operating Conditions	Add the footnote
69,70	3.DC Characteristics (1) Current rating	•Corrected the Condition •Delete the minmun value •Corrected the remarks •Add the footnote
92	(9) CSIO Timing •Synchronous serial (SPI=1, SCINV=1)	Corrected the figure of "MS bit=1"

Page	Section	Change Results
	(9) CSIO Timing • External clock(EXT=1):asyntironous only	Corrected the figure
94	(12) I^2C Timing	Corrected the description as follows. •Typical mode → Standard-mode •High-speed mode→ Fast-mode
97	5.12-bit A/D Converter •Electrical Characteristics for the A/D Converter	•Corrected the terminal name AN00 ~ AN23 → ANxx •Corrected the minmum value of "Sampling time" •Corrected the max and min value of "State transition time to oprerationpermission" •Corrected the footnote
107	■ORDERING INFORMATON	Corrected the "Part number"
Revision 4.0		
2	■Features ●USB Interface	Added the description of PLL for USB
57	■Memory Map · Memory map(2)	Added the summary of Flash memory sector and the note
69 - 71	■Electrical Characteristics 3. DC Characteristics (1) Current rating	· Changed the table format · Added Main Timer mode current · Moved A/D Converter Current
72	■Electrical Characteristics 3. DC Characteristics (2) Pin Characteristics	Added input leak current of CEC pin at power off.
76	■Electrical Characteristics 5. AC Characteristics (4-1) Operating Conditions of Main and USB PLL (4-2) Operating Conditions of Main PLL	Added the figure of Main PLL connection and USB PLL connection
77	■Electrical Characteristics 5. AC Characteristics (6) Power-on Reset Timing	· Added Time until releasing Power-on reset · Changed the figure of timing
86 - 93	■Electrical Characteristics 5. AC Characteristics (9) CSIO/UART Timing	· Modified from UART Timing to CSIO/UART Timing · Changed from Internal shift clock operation to Master mode · Changed from External shift clock operation to Slave mode
98	■Electrical Characteristics 6. 12bit A/D Converter	· Added the typical value of Integral Nonlinearity, Differential Nonlinearity, Zero transition voltage and Full-scale transition voltage · Added Conversion time at AVcc < 2.7V
108 - 111	■Electrical Characteristics 10. Return Time from Low-Power Consumption Mode	Added Return Time from Low-Power Consumption Mode
112, 113	■Ordering Information	Changed notation of part number

NOTE: Please see “Document History” about later revised information.

Document History

Document Title: CY9AB40NB Series 32-bit ARM® Cortex®-M3 FM3 Microcontroller
Document Number: 002-05631

Revision	ECN	Orig. of Change	Submission Date	Description of Change
**	-	AKIH	06/10/2015	Migrated to Cypress and assigned document number 002-05631. No change to document contents.
*A	5120116	AKIH	02/15/2016	Updated to Cypress template.
*B	5534251	YSKA	07/26/2017	Updated “12.5.6 Power-On Reset Timing”. Changed parameter from “Power Supply rise time(Tr)[ms]” to “Power ramp rate(dV/dt)[mV/µs]” and added some comments (Page 77) Modified RTC description in “Features, Real-Time Clock(RTC)” as below Changed starting count value from 01 to 00. Deleted “second, or day of the week” in the Interrupt function (Page 3) Added Notes for JTAG (Page 40), Changed “J-TAG” to” JTAG” in “3.2 List of Pin Functions” (Page 28) Updated Package code and dimensions as follows (Page 7-14, 111-120) FPT-64P-M38 -> LQD064, FPT-64P-M39 -> LQG064, LCC-64P-M24 -> VNC064, FPT-80P-M37 -> LQH080, FPT-80P-M40 -> LQJ080, BGA-96P-M07 -> FDG096, FPT-100P-M23 -> LQI100, FPT-100P-M36 -> PQH100 BGA-112P-M04 -> LBC112 Added “16. Errata” (Page 121) Change the name from “USB Function” to “USB Device” (Page 1, 6, 37) Add “Analog reference voltage(AVRL)” in “13.2 Recommended Operating Conditions” and “12.6 12-bit A/D Converter” (Page 67, 98) Corrected the following statement Analog port input current → Analog port input leak current in chapter 13.6. 12-bit A/D Converter (Page 98) Added the Baud rate spec in “12.5.9 CSIO/UART Timing” (Page 86, 88, 90, 92)
*C	6570760	XITO	05/09/2019	Updated Document Title to read as “CY9AB40NB Series 32-bit ARM® Cortex®-M3 FM3 Microcontroller”. Replaced “MB9AB40NB Series” with “CY9AB40NB Series” in all instances across the document. Updated Ordering Information: Updated part numbers. Updated to new template. Completing Sunset Review.

Sales, Solutions, and Legal Information

Worldwide Sales and Design Support

Cypress maintains a worldwide network of offices, solution centers, manufacturer's representatives, and distributors. To find the office closest to you, visit us at Cypress Locations.

Products

ARM® Cortex® Microcontrollers	cypress.com/arm
Automotive	cypress.com/automotive
Clocks & Buffers	cypress.com/clocks
Interface	cypress.com/interface
Internet of Things	cypress.com/iot
Memory	cypress.com/memory
Microcontrollers	cypress.com/mcu
PSoC	cypress.com/psoc
Power Management ICs	cypress.com/pmic
Touch Sensing	cypress.com/touch
USB Controllers	cypress.com/usb
Wireless Connectivity	cypress.com/wireless

PSoC® Solutions

PSoC 1 | PSoC 3 | PSoC 4 | PSoC 5LP | PSoC 6 MCU

Cypress Developer Community

Community | Projects | Video | Blogs | Training | Components

Technical Support

cypress.com/support

ARM and Cortex are the registered trademarks of ARM Limited in the EU and other countries. All other trademarks or registered trademarks referenced herein are the property of their respective owners.

© Cypress Semiconductor Corporation, 2012-2019. This document is the property of Cypress Semiconductor Corporation and its subsidiaries ("Cypress"). This document, including any software or firmware included or referenced in this document ("Software"), is owned by Cypress under the intellectual property laws and treaties of the United States and other countries worldwide. Cypress reserves all rights under such laws and treaties and does not, except as specifically stated in this paragraph, grant any license under its patents, copyrights, trademarks, or other intellectual property rights. If the Software is not accompanied by a license agreement and you do not otherwise have a written agreement with Cypress governing the use of the Software, then Cypress hereby grants you a personal, non-exclusive, nontransferable license (without the right to sublicense) (1) under its copyright rights in the Software (a) for Software provided in source code form, to modify and reproduce the Software solely for use with Cypress hardware products, only internally within your organization, and (b) to distribute the Software in binary code form externally to end users (either directly or indirectly through resellers and distributors), solely for use on Cypress hardware product units, and (2) under those claims of Cypress's patents that are infringed by the Software (as provided by Cypress, unmodified) to make, use, distribute, and import the Software solely for use with Cypress hardware products. Any other use, reproduction, modification, translation, or compilation of the Software is prohibited.

TO THE EXTENT PERMITTED BY APPLICABLE LAW, CYPRESS MAKES NO WARRANTY OF ANY KIND, EXPRESS OR IMPLIED, WITH REGARD TO THIS DOCUMENT OR ANY SOFTWARE OR ACCOMPANYING HARDWARE, INCLUDING, BUT NOT LIMITED TO, THE IMPLIED WARRANTIES OF MERCHANTABILITY AND FITNESS FOR A PARTICULAR PURPOSE. No computing device can be absolutely secure. Therefore, despite security measures implemented in Cypress hardware or software products, Cypress shall have no liability arising out of any security breach, such as unauthorized access to or use of a Cypress product. CYPRESS DOES NOT REPRESENT, WARRANT, OR GUARANTEE THAT CYPRESS PRODUCTS, OR SYSTEMS CREATED USING CYPRESS PRODUCTS, WILL BE FREE FROM CORRUPTION, ATTACK, VIRUSES, INTERFERENCE, HACKING, DATA LOSS OR THEFT, OR OTHER SECURITY INTRUSION (collectively, "Security Breach"). Cypress disclaims any liability relating to any Security Breach, and you shall and hereby do release Cypress from any claim, damage, or other liability arising from any Security Breach. In addition, the products described in these materials may contain design defects or errors known as errata which may cause the product to deviate from published specifications. To the extent permitted by applicable law, Cypress reserves the right to make changes to this document without further notice. Cypress does not assume any liability arising out of the application or use of any product or circuit described in this document. Any information provided in this document, including any sample design information or programming code, is provided only for reference purposes. It is the responsibility of the user of this document to properly design, program, and test the functionality and safety of any application made of this information and any resulting product. "High-Risk Device" means any device or system whose failure could cause personal injury, death, or property damage. Examples of High-Risk Devices are weapons, nuclear installations, surgical implants, and other medical devices. "Critical Component" means any component of a High-Risk Device whose failure to perform can be reasonably expected to cause, directly or indirectly, the failure of the High-Risk Device, or to affect its safety or effectiveness. Cypress is not liable, in whole or in part, and you shall and hereby do release Cypress from any claim, damage, or other liability arising from any use of a Cypress product as a Critical Component in a High-Risk Device. You shall indemnify and hold Cypress, its directors, officers, employees, agents, affiliates, distributors, and assigns harmless from and against all claims, costs, damages, and expenses, arising out of any claim, including claims for product liability, personal injury or death, or property damage arising from any use of a Cypress product as a Critical Component in a High-Risk Device. Cypress products are not intended or authorized for use as a Critical Component in any High-Risk Device except to the limited extent that (i) Cypress's published data sheet for the product explicitly states Cypress has qualified the product for use in a specific High-Risk Device, or (ii) Cypress has given you advance written authorization to use the product as a Critical Component in the specific High-Risk Device and you have signed a separate indemnification agreement.

Cypress, the Cypress logo, Spansion, the Spansion logo, and combinations thereof, WICED, PSoC, CapSense, EZ-USB, F-RAM, and Traveo are trademarks or registered trademarks of Cypress in the United States and other countries. For a more complete list of Cypress trademarks, visit cypress.com. Other names and brands may be claimed as property of their respective owners.

Looking for pricing, stock, or lifecycle information?

Click below to explore more details on WIN SOURCE:

- View CY9AFB41MBBGL-GE1 on WIN SOURCE
- Infineon Technologies Information

Optimize Your Supply Chain with WIN SOURCE Solutions

- Global Sourcing Solution
- Obsolete Management
- Cost Control Management
- Shortage Management
- Alternative Solution
- Excess Inventory Management