THE DATASHEET OF

222SMVABR

www.win-source.net 0086-755-83957316

Series 222S Datasheet

6.0 x 3.8mm IP57 Rated Tactile Switch

- Surface mount gull wing terminal configurations
- Compatible with IR reflow, and manual soldering
- Variety of operating force & actuator height options
- Compact size to suitable for smaller usage space
- IP57 protection
- Silicone rubber actuator
- Long life
- Excellent tactile feel

Ordering Information

Series	Terminal Type	Actuating Direction	Actuator Height "L"	Actuation Force	Packaging	Contact and Terminal Plating
222S	M	V	A	A	R	D

Code	Spec.
M	Surface mount gull wing

Code	Spec.
V	Vertical

Code	Spec.
A	2.5mm

Code	Spec.
A	200 gf, black
B	300 gf, nature

Code	Spec.
R	Tape & reel packaging

Code	Spec.
Blank	Silver
D	Gold

©2021 CTS® Corporation. Information/product(s) subject to change. No warranty that product(s) will meet the stated specifications for customer specific applications or test equipment. Visit www.ctscorp.com for list of applicable patent(s), more information, or to request a quote.

Electrical Specifications

Parameter	Conditions & Remarks	Min	Max	Unit
Contact Resistance			100	milliohms
Insulation Resistance	Between insulated terminals	1000		megohms
Dielectric Strength	250 VAC between adjacent switches		1	minute
Nonswitching Rating (Silver)			50 or 32	mA or VDC
Nonswitching Rating (Gold)			10 or 32	mA or VDC

Mechanical and Environmental

Soldering	Maximum reflow temperature, 260°C for 5 seconds Maximum manual temperature, 350°C for 3 seconds
RoHS	Lead-Free. Fully compliant to RoHS Directive 2011/65/EU
Operating Force	200±50 gf 300±75 gf
Actuation Life	100,000 cycles
Actuator Strength	3 Kgf maximum
Travel	0.30±0.15mm (200 gf) 0.35±0.15mm (300 gf)
Packaging	Standard tape and reel packaging
Operating Temperature Range (Silver)	-40°C to +85°C
Operating Temperature Range (Gold)	-40°C to +125°C
Storage Temperature Range (Silver)	-40°C to +85°C
Storage Temperature Range (Gold)	-55°C to +125°C
Waterproof Grade	IP57

Soldering Profile

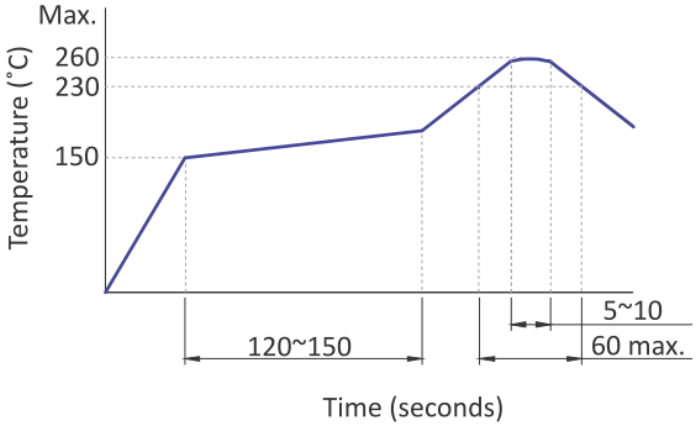

©2021 CTS® Corporation. Information/product(s) subject to change. No warranty that product(s) will meet the stated specifications for customer specific applications or test equipment. Visit www.ctscorp.com for list of applicable patent(s), more information, or to request a quote.

Mechanical Specifications

Figure 1 – 222SMA, Surface Mount Gull Wing, Actuator Height 2.5mm

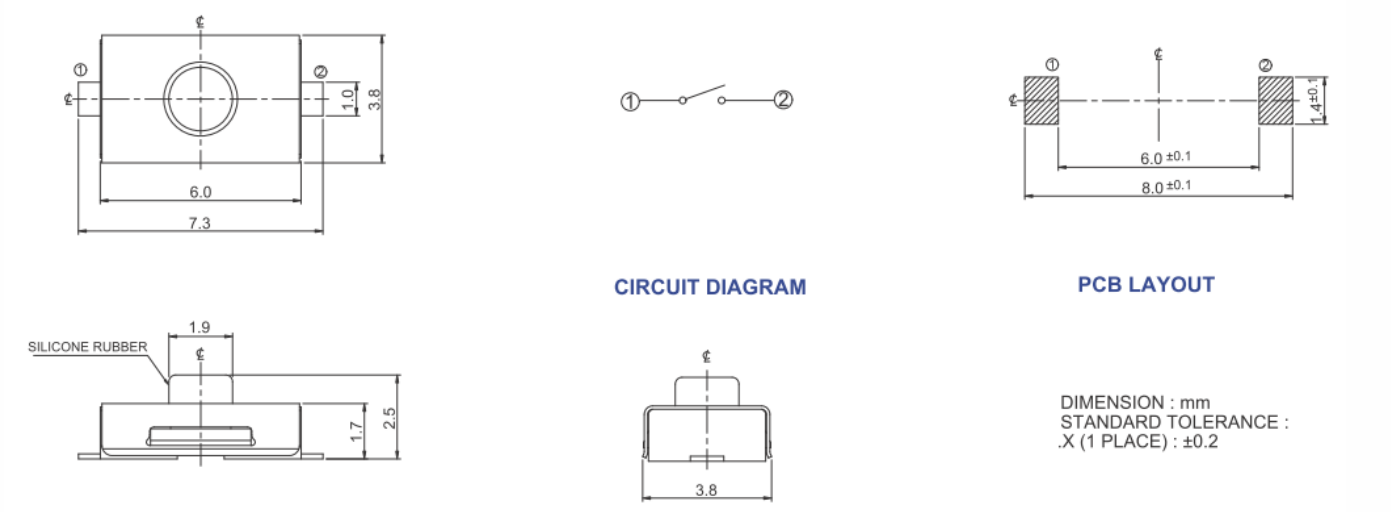

Packing: Tape and Reel

Surface Mount Gull Wing, Actuator Height 2.5mm

The packing specifications:

1. Structure and materials:

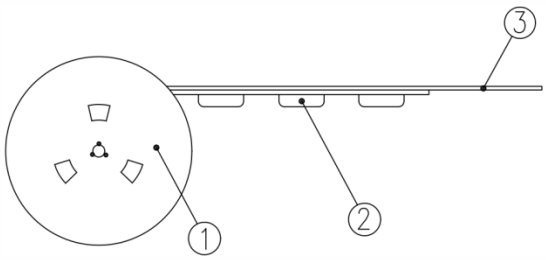

No	PART NAME	MATERIAL
①	REEL	POLYSTYRENE
②	CARRIER TAPE	POLYSTYRENE
③	COVER TAPE	POLYESTER

2. Packing quantity: 3,000 pcs/reel
3. More than 10 empty pockets should remain at each end of the carrier tape for each reel.
4. Shortage of less than 10 pcs a reel is acceptable but no more than 3 consecutive empty pockets are allowed.
5. Stripping strength of cover tape is between 10 gf to 130 gf and stripping angle should be within 165°~180°.
6. The product in the pocket of carrier tape should be placed in a specified correct position.
7. Tape and reel per EIA-481.
8. Dimensions:

©2021 CTS® Corporation. Information/product(s) subject to change. No warranty that product(s) will meet the stated specifications for customer specific applications or test equipment. Visit www.ctscorp.com for list of applicable patent(s), more information, or to request a quote.

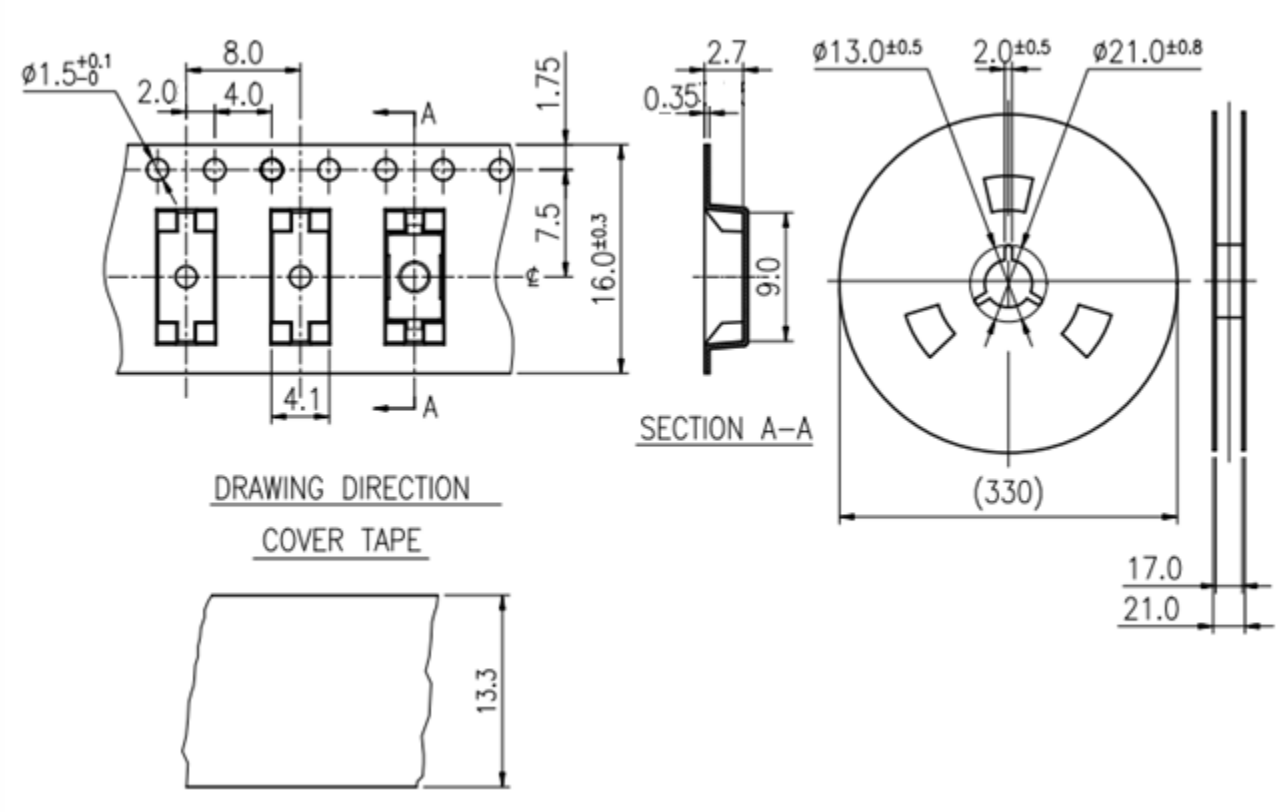

©2021 CTS® Corporation. Information/product(s) subject to change. No warranty that product(s) will meet the stated specifications for customer specific applications or test equipment. Visit www.ctscorp.com for list of applicable patent(s), more information, or to request a quote.

Looking for pricing, stock, or lifecycle information?

Click below to explore more details on WIN SOURCE:

- View 222SMVABR on WIN SOURCE
- CTS Electrocomponents Information

Optimize Your Supply Chain with WIN SOURCE Solutions

- Global Sourcing Solution
- Obsolete Management
- Cost Control Management
- Shortage Management
- Alternative Solution
- Excess Inventory Management