THE DATASHEET OF

TL431BIDG

www.win-source.net 0086-755-83957316

Programmable Precision References

TL431A, B Series, NCV431A, B Series, SCV431A

The TL431A, B integrated circuits are three−terminal programmable shunt regulator diodes. These monolithic IC voltage references operate as a low temperature coefficient zener which is programmable from V_{ref} to 36 V with two external resistors. These devices exhibit a wide operating current range of 1.0 mA to 100 mA with a typical dynamic impedance of 0.22 Ω. The characteristics of these references make them excellent replacements for zener diodes in many applications such as digital voltmeters, power supplies, and op amp circuitry. The 2.5 V reference makes it convenient to obtain a stable reference from 5.0 V logic supplies, and since the TL431A, B operates as a shunt regulator, it can be used as either a positive or negative voltage reference.

Features

- Programmable Output Voltage to 36 V
- Voltage Reference Tolerance: ±0.4%, Typ @ 25°C (TL431B)
- Low Dynamic Output Impedance, 0.22 Ω Typical
- Sink Current Capability of 1.0 mA to 100 mA
- Equivalent Full−Range Temperature Coefficient of 50 ppm/°C Typical
- Temperature Compensated for Operation over Full Rated Operating Temperature Range
- Low Output Noise Voltage
- NCV/SCV Prefixes for Automotive and Other Applications Requiring Unique Site and Control Change Requirements; AEC−Q100 Qualified and PPAP Capable
- These Devices are Pb−Free, Halogen Free/BFR Free and are RoHS Compliant

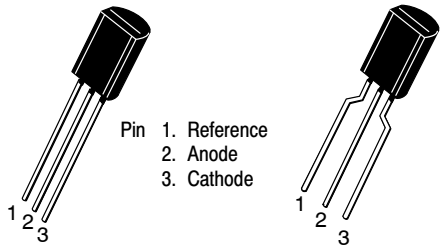

STRAIGHT LEAD BULK PACK

BENT LEAD TAPE & REEL AMMO PACK

TO−92
LP SUFFIX
CASE 29−10

TO−92
LPRA, LPRE, LPRM, LPRP SUFFIX
CASE 29−10

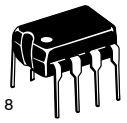

PDIP−8
P SUFFIX
CASE 626

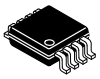

Micro8™
DM SUFFIX
CASE 846A

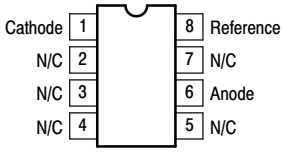

(Top View)

SOIC−8
D SUFFIX
CASE 751

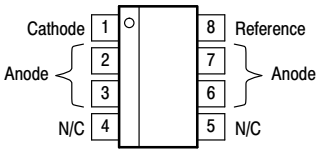

(Top View)

This is an internally modified SOIC−8 package. Pins 2, 3, 6 and 7 are electrically common to the die attach flag. This internal lead frame modification increases power dissipation capability when appropriately mounted on a printed circuit board. This modified package conforms to all external dimensions of the standard SOIC−8 package.

ORDERING INFORMATION

See detailed ordering and shipping information on page 13 of this data sheet.

DEVICE MARKING INFORMATION

See general marking information in the device marking section on page 14 of this data sheet.

© Semiconductor Components Industries, LLC, 1995

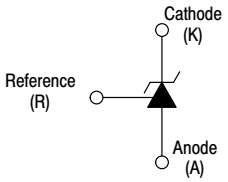

Figure 1. Symbol

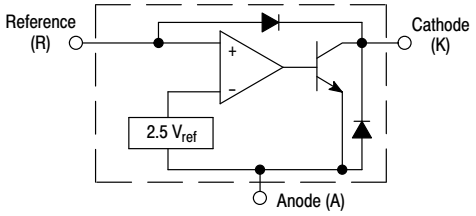

Figure 2. Representative Block Diagram

This device contains 12 active transistors.

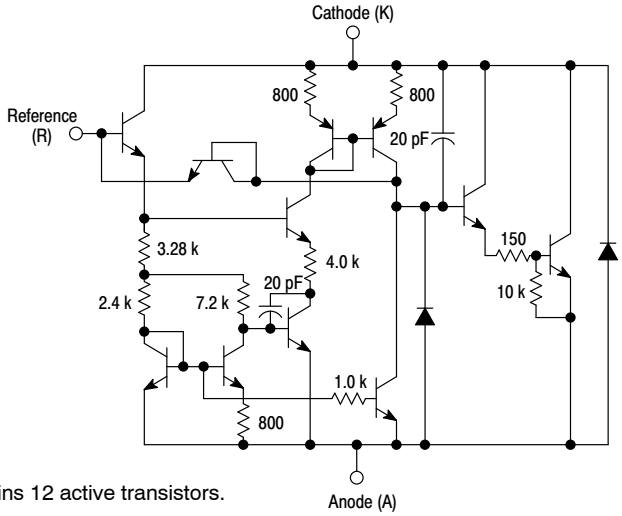

Figure 3. Representative Schematic Diagram

Component values are nominal

MAXIMUM RATINGS (Full operating ambient temperature range applies, unless otherwise noted.)

Rating	Symbol	Value	Unit
Cathode to Anode Voltage	V_{KA}	37	V
Cathode Current Range, Continuous	I_K	−100 to +150	mA
Reference Input Current Range, Continuous	I_{ref}	−0.05 to +10	mA
Operating Junction Temperature	T_J	150	°C
Operating Ambient Temperature Range	T_A		°C
TL431I, TL431AI, TL431BI		−40 to +85	
TL431C, TL431AC, TL431BC		0 to +70	
NCV431AI, NCV431B, TL431BV, SCV431AI		−40 to +125	
Storage Temperature Range	T_{stg}	−65 to +150	°C
Total Power Dissipation @ T_A = 25°C	P_D		W
Derate above 25°C Ambient Temperature			
D, LP Suffix Plastic Package		0.70	
P Suffix Plastic Package		1.10	
DM Suffix Plastic Package		0.52	
Total Power Dissipation @ T_C = 25°C	P_D		W
Derate above 25°C Case Temperature			
D, LP Suffix Plastic Package		1.5	
P Suffix Plastic Package		3.0	
ESD Rating (Note 1)			V
Human Body Model per JEDEC JESD22−A114F	HBM	>2000	
Machine Model per JEDEC JESD22−A115C	MM	>200	
Charged Device Model per JEDEC JESD22−C101E	CDM	>500	

Stresses exceeding those listed in the Maximum Ratings table may damage the device. If any of these limits are exceeded, device functionality should not be assumed, damage may occur and reliability may be affected.

1. This device contains latch−up protection and exceeds ±100 mA per JEDEC standard JESD78.

RECOMMENDED OPERATING CONDITIONS

Condition	Symbol	Min	Max	Unit
Cathode to Anode Voltage	V_{KA}	V_{ref}	36	V
Cathode Current	I_K	1.0	100	mA

Functional operation above the stresses listed in the Recommended Operating Ranges is not implied. Extended exposure to stresses beyond the Recommended Operating Ranges limits may affect device reliability.

THERMAL CHARACTERISTICS

Characteristic	Symbol	D, LP Suffix Package	P Suffix Package	DM Suffix Package	Unit
Thermal Resistance, Junction−to−Ambient	$R_{\theta JA}$	178	114	240	°C/W
Thermal Resistance, Junction−to−Case	$R_{\theta JC}$	83	41	–	°C/W

ELECTRICAL CHARACTERISTICS (T_A = 25°C, unless otherwise noted.)

Characteristic	Symbol	TL431I			TL431C			Unit
		Min	Typ	Max	Min	Typ	Max	
Reference Input Voltage (Figure 1) $V_{KA} = V_{ref}$, I_K = 10 mA T_A = 25°C $T_A = T_{low}$ to T_{high} (Note 2)	V_{ref}	 2.44 2.41	 2.495 –	 2.55 2.58	 2.44 2.423	 2.495 –	 2.55 2.567	V
Reference Input Voltage Deviation Over Temperature Range (Figure 1, Notes 3, 4) $V_{KA} = V_{ref}$, I_K = 10 mA	ΔV_{ref}	–	7.0	30	–	3.0	17	mV
Ratio of Change in Reference Input Voltage to Change in Cathode to Anode Voltage I_K = 10 mA (Figure 2), ΔV_{KA} = 10 V to V_{ref} ΔV_{KA} = 36 V to 10 V	$\frac{\Delta V_{ref}}{\Delta V_{KA}}$	 – –	 −1.4 −1.0	 −2.7 −2.0	 – –	 −1.4 −1.0	 −2.7 −2.0	mV/V
Reference Input Current (Figure 2) I_K = 10 mA, R1 = 10 k, R2 = ∞ T_A = 25°C $T_A = T_{low}$ to T_{high} (Note 2)	I_{ref}	 – –	 1.8 –	 4.0 6.5	 – –	 1.8 –	 4.0 5.2	μA
Reference Input Current Deviation Over Temperature Range (Figure 2, Note 3) I_K = 10 mA, R1 = 10 k, R2 = ∞	ΔI_{ref}	–	0.8	2.5	–	0.4	1.2	μA
Minimum Cathode Current For Regulation $V_{KA} = V_{ref}$ (Figure 1)	I_{min}	–	0.5	1.0	–	0.5	1.0	mA
Off−State Cathode Current (Figure 3) V_{KA} = 36 V, V_{ref} = 0 V	I_{off}	–	20	1000	–	20	1000	nA
Dynamic Impedance (Figure 1, Note 5) $V_{KA} = V_{ref}$, ΔI_K = 1.0 mA to 100 mA, f ≤ 1.0 kHz	$\lvert Z_{KA}\rvert$	–	0.22	0.5	–	0.22	0.5	Ω

Product parametric performance is indicated in the Electrical Characteristics for the listed test conditions, unless otherwise noted. Product performance may not be indicated by the Electrical Characteristics if operated under different conditions.

2. T_{low} = −40°C for TL431AIP TL431AILP, TL431IP, TL431ILP, TL431BID, TL431BIP, TL431BILP, TL431AIDM, TL431IDM, TL431BIDM;
   = 0°C for TL431ACP, TL431ACLP, TL431CP, TL431CLP, TL431CD, TL431ACD, TL431BCD, TL431BCP, TL431BCLP, TL431CDM, TL431ACDM, TL431BCDM
   T_{high} = +85°C for TL431AIP, TL431AILP, TL431IP, TL431ILP, TL431BID, TL431BIP, TL431BILP, TL431IDM, TL431AIDM, TL431BIDM
   = +70°C for TL431ACP, TL431ACLP, TL431CP, TL431ACD, TL431BCD, TL431BCP, TL431BCLP, TL431CDM, TL431ACDM, TL431BCDM
3. Guaranteed by design.
4. The deviation parameter ΔV_{ref} is defined as the difference between the maximum and minimum values obtained over the full operating ambient temperature range that applies.

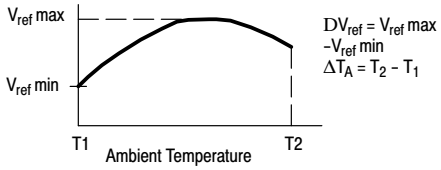

The average temperature coefficient of the reference input voltage, αV_{ref} is defined as:

$$V_{ref}\ \frac{ppm}{°C} = \frac{\left(\frac{\Delta V_{ref}}{V_{ref}\ @\ 25°C}\right) X\ 10^6}{\Delta T_A} = \frac{\Delta V_{ref} \times 10^6}{\Delta T_A\ (V_{ref}\ @\ 25°C)}$$

αV_{ref} can be positive or negative depending on whether V_{ref} Min or V_{ref} Max occurs at the lower ambient temperature. (Refer to Figure 6.)

Example : ΔV_{ref} = 8.0 mV and slope is positive,

V_{ref} @ 25°C = 2.495 V, ΔT_A = 70°C

$$\alpha V_{ref} = \frac{0.008 \times 10^6}{70\ (2.495)} = 45.8\ ppm/°C$$

5. The dynamic impedance Z_{KA} is defined as: $\lvert Z_{KA}\rvert = \frac{\Delta V_{KA}}{\Delta I_K}$. When the device is programmed with two external resistors, R1 and R2, (refer to Figure 2) the total dynamic impedance of the circuit is defined as: $\lvert Z_{KA}'\rvert \approx \lvert Z_{KA}\rvert \left(1 + \frac{R1}{R2}\right)$

ELECTRICAL CHARACTERISTICS (T_A = 25°C, unless otherwise noted.)

Characteristic	Symbol	TL431AI / NCV431AI/ SCV431AI			TL431AC			TL431BC / TL431BI / TL431BV / NCV431BV			Unit
		Min	Typ	Max	Min	Typ	Max	Min	Typ	Max	
Reference Input Voltage (Figure 1) $V_{KA} = V_{ref}$, I_K = 10 mA T_A = 25°C $T_A = T_{low}$ to T_{high} (Note 6)	V_{ref}	 2.47 2.44	 2.495 –	 2.52 2.55	 2.47 2.453	 2.495 –	 2.52 2.537	 2.485 2.475	 2.495 2.495	 2.505 2.515	V
Reference Input Voltage Deviation Over Temperature Range (Figure 1, Notes 7, 8) $V_{KA} = V_{ref}$, I_K = 10 mA	ΔV_{ref}	–	7.0	30	–	3.0	17	–	3.0	17	mV
Ratio of Change in Reference Input Voltage to Change in Cathode to Anode Voltage I_K = 10 mA (Figure 2), ΔV_{KA} = 10 V to V_{ref} ΔV_{KA} = 36 V to 10 V	$\frac{\Delta V_{ref}}{\Delta V_{KA}}$	 – –	 −1.4 −1.0	 −2.7 −2.0	 – –	 −1.4 −1.0	 −2.7 −2.0	 – –	 −1.4 −1.0	 −2.7 −2.0	mV/V
Reference Input Current (Figure 2) I_K = 10 mA, R1 = 10 k, R2 = ∞ T_A = 25°C $T_A = T_{low}$ to T_{high} (Note 6)	I_{ref}	 – –	 1.8 –	 4.0 6.5	 – –	 1.8 –	 4.0 5.2	 – –	 1.1 –	 2.0 4.0	μA
Reference Input Current Deviation Over Temperature Range (Figure 2, Note 7) I_K = 10 mA, R1 = 10 k, R2 = ∞	ΔI_{ref}	–	0.8	2.5	–	0.4	1.2	–	0.8	2.5	μA
Minimum Cathode Current For Regulation $V_{KA} = V_{ref}$ (Figure 1)	I_{min}	–	0.5	1.0	–	0.5	1.0	–	0.5	1.0	mA
Off−State Cathode Current (Figure 3) V_{KA} = 36 V, V_{ref} = 0 V	I_{off}	–	20	1000	–	20	1000	–	0.23	500	nA
Dynamic Impedance (Figure 1, Note 9) $V_{KA} = V_{ref}$, ΔI_K = 1.0 mA to 100 mA f ≤ 1.0 kHz	$\lvert Z_{KA}\rvert$	–	0.22	0.5	–	0.22	0.5	–	0.14	0.3	Ω

Product parametric performance is indicated in the Electrical Characteristics for the listed test conditions, unless otherwise noted. Product performance may not be indicated by the Electrical Characteristics if operated under different conditions.

6. T_{low} = −40°C for TL431AIP TL431AILP, TL431IP, TL431ILP, TL431BID, TL431BIP, TL431BILP, TL431BV, TL431AIDM, TL431IDM, TL431BIDM, NCV431AIDMR2G, NCV431AIDR2G, NCV431BVDR2G, SCV431AIDMR2G
   = 0°C for TL431ACP, TL431ACLP, TL431CP, TL431CLP, TL431CD, TL431ACD, TL431BCD, TL431BCP, TL431BCLP, TL431CDM, TL431ACDM, TL431BCDM, SCV431AIDMR2G
   T_{high} = +85°C for TL431AIP, TL431AILP, TL431IP, TL431ILP, TL431BID, TL431BIP, TL431BILP, TL431IDM, TL431AIDM, TL431BIDM
   = +70°C for TL431ACP, TL431ACLP, TL431CP, TL431ACD, TL431BCD, TL431BCP, TL431BCLP, TL431CDM, TL431ACDM, TL431BCDM
   = +125°C TL431BV, NCV431AIDMR2G, NCV431AIDR2G, NCV431BVDMR2G, NCV431BVDR2G, SCV431AIDMR2G
7. Guaranteed by design.
8. The deviation parameter ΔV_{ref} is defined as the difference between the maximum and minimum values obtained over the full operating ambient temperature range that applies.

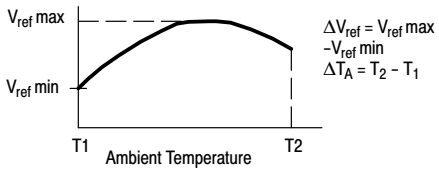

The average temperature coefficient of the reference input voltage, αV_{ref} is defined as:

$$V_{ref}\ \frac{ppm}{°C} = \frac{\left(\frac{\Delta V_{ref}}{V_{ref}\ @\ 25°C}\right) X\ 10^6}{\Delta T_A} = \frac{\Delta V_{ref} \times 10^6}{\Delta T_A\ (V_{ref}\ @\ 25°C)}$$

αV_{ref} can be positive or negative depending on whether V_{ref} Min or V_{ref} Max occurs at the lower ambient temperature. (Refer to Figure 6.)

Example : ΔV_{ref} = 8.0 mV and slope is positive,
V_{ref} @ 25°C = 2.495 V, ΔT_A = 70°C

$$\alpha\ V_{ref} = \frac{0.008 \times 10^6}{70\ (2.495)} = 45.8\ ppm/°C$$

9. The dynamic impedance Z_{KA} is defined as $\lvert Z_{KA}\rvert = \frac{\Delta V_{KA}}{\Delta I_K}$ When the device is programmed with two external resistors, R1 and R2, (refer to Figure 2) the total dynamic impedance of the circuit is defined as: $\lvert Z_{KA}'\rvert \approx \lvert Z_{KA}\rvert \left(1 + \frac{R1}{R2}\right)$
10. NCV431AIDMR2G, NCV431AIDR2G, NCV431BVDMR2G, NCV431BVDR2G, SCV431AIDMR2G T_{low} = −40°C, T_{high} = +125°C. NCV prefix is for automotive and other applications requiring unique site and control change requirements.

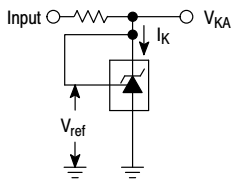

Figure 1. Test Circuit for $V_{KA} = V_{ref}$

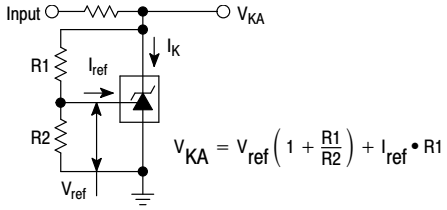

Figure 2. Test Circuit for $V_{KA} > V_{ref}$

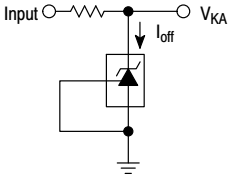

Figure 3. Test Circuit for I_{off}

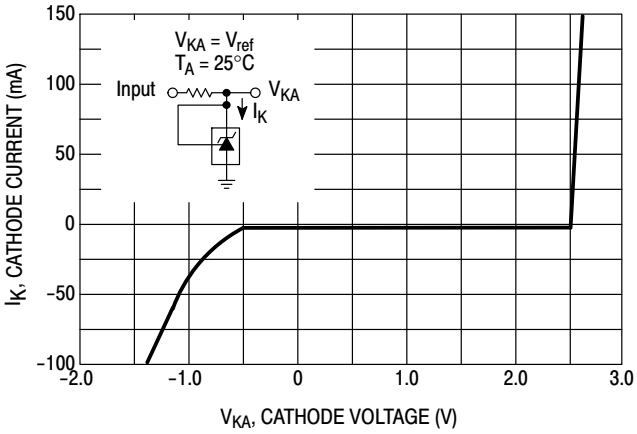

Figure 4. Cathode Current versus Cathode Voltage

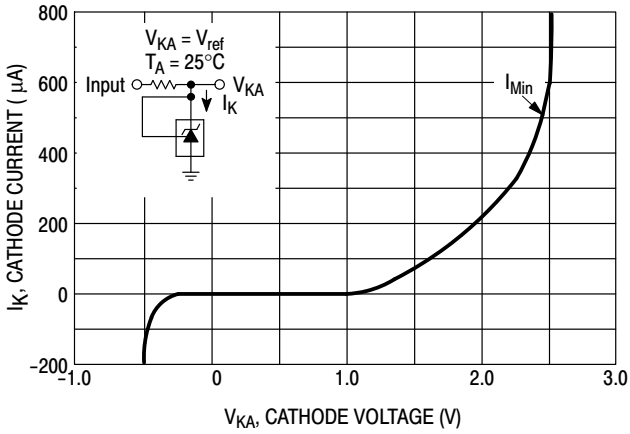

Figure 5. Cathode Current versus Cathode Voltage

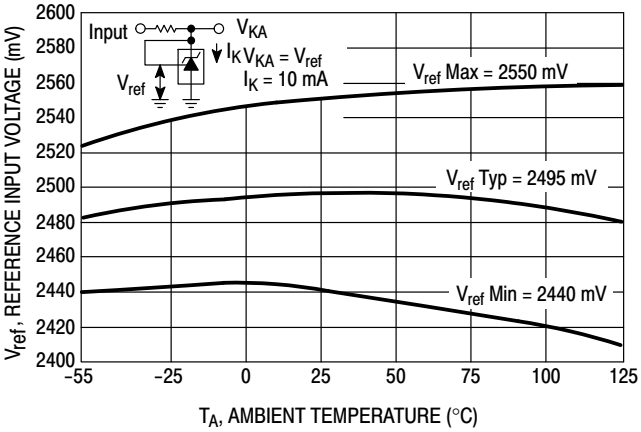

Figure 6. Reference Input Voltage versus Ambient Temperature

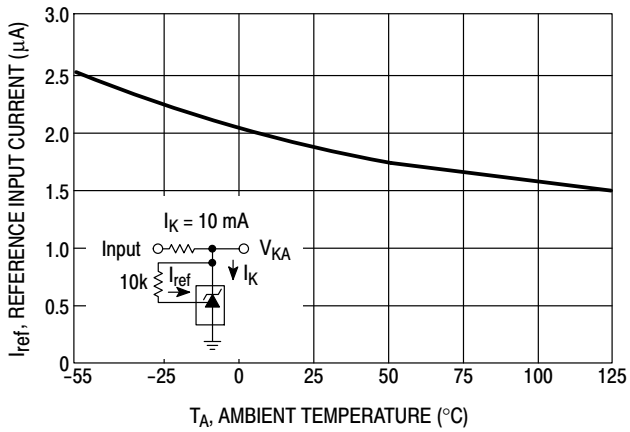

Figure 7. Reference Input Current versus Ambient Temperature

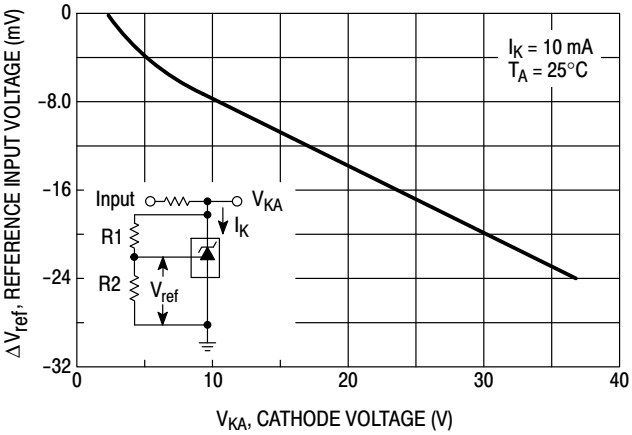

Figure 8. Change in Reference Input Voltage versus Cathode Voltage

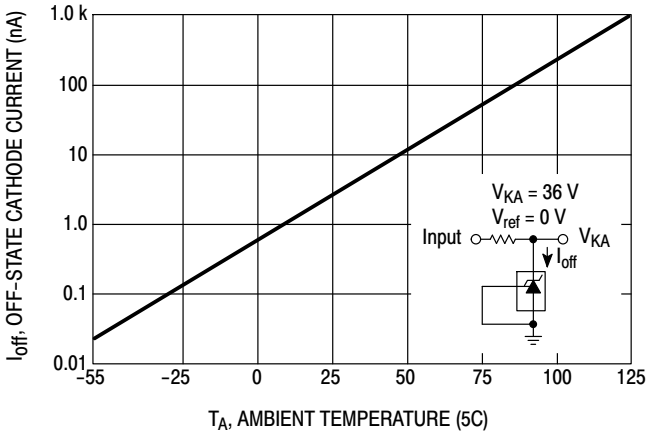

Figure 9. Off−State Cathode Current versus Ambient Temperature

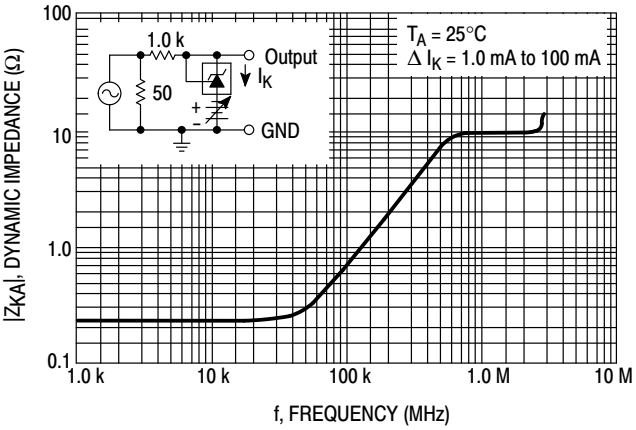

Figure 10. Dynamic Impedance versus Frequency

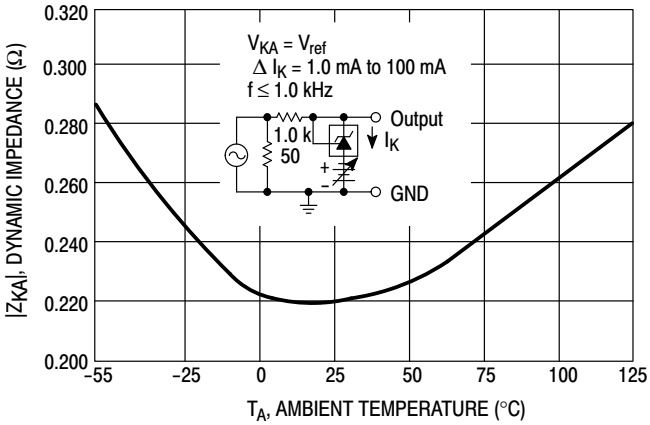

Figure 11. Dynamic Impedance versus Ambient Temperature

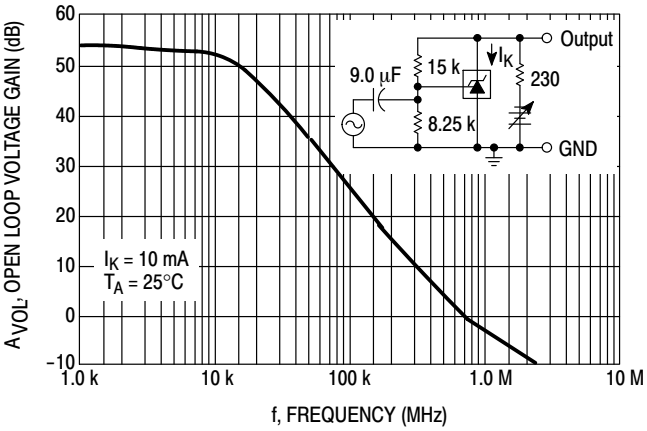

Figure 12. Open−Loop Voltage Gain versus Frequency

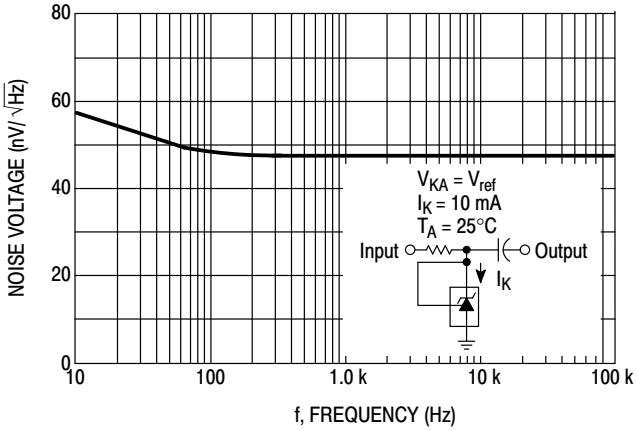

Figure 13. Spectral Noise Density

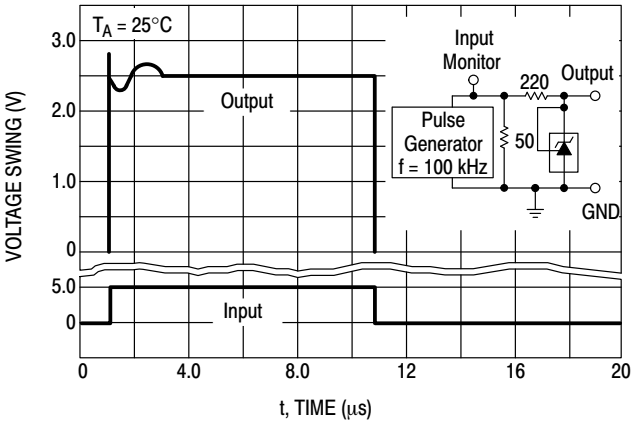

Figure 14. Pulse Response

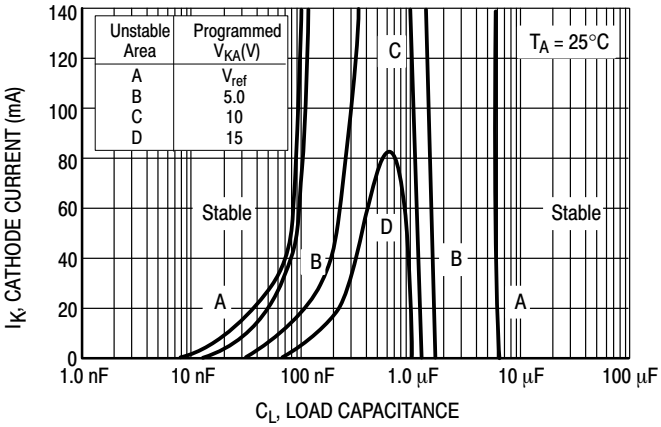

Figure 15. Stability Boundary Conditions

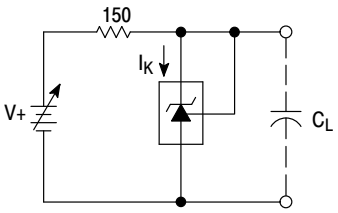

Figure 16. Test Circuit For Curve A of Stability Boundary Conditions

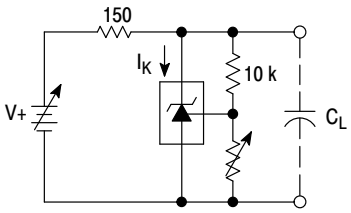

Figure 17. Test Circuit For Curves B, C, And D of Stability Boundary Conditions

TYPICAL APPLICATIONS

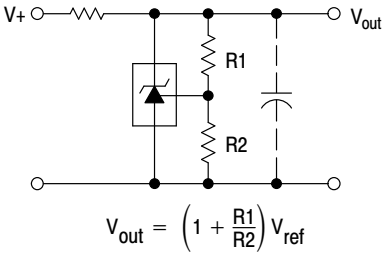

Figure 18. Shunt Regulator

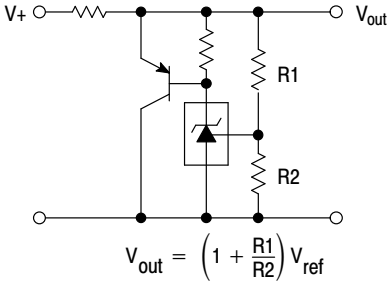

Figure 19. High Current Shunt Regulator

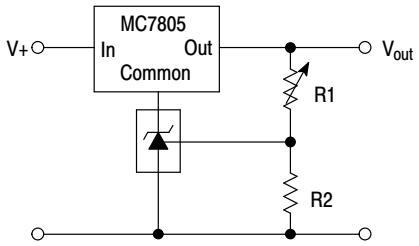

$$V_{out} = \left(1 + \frac{R1}{R2}\right) V_{ref}$$

$$V_{out(min)} = V_{ref} + 5.0\ V$$

Figure 20. Output Control for a Three−Terminal Fixed Regulator

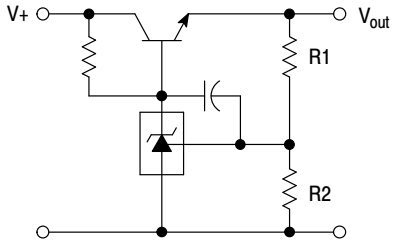

$$V_{out} = \left(1 + \frac{R1}{R2}\right) V_{ref}$$

$$V_{in(min)} = V_{out} + V_{be}$$

$$V_{out(min)} = V_{ref}$$

Figure 21. Series Pass Regulator

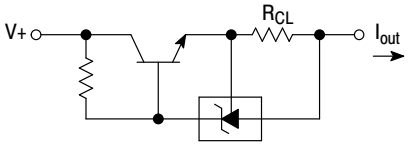

$$I_{out} = \frac{V_{ref}}{R_{CL}}$$

Figure 22. Constant Current Source

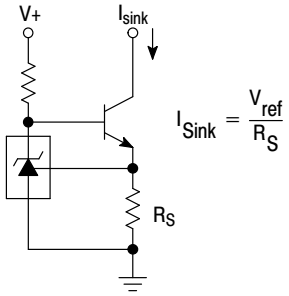

$$I_{Sink} = \frac{V_{ref}}{R_S}$$

Figure 23. Constant Current Sink

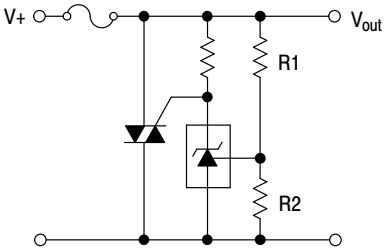

$$V_{out(trip)} = \left(1 + \frac{R1}{R2}\right) V_{ref}$$

Figure 24. TRIAC Crowbar

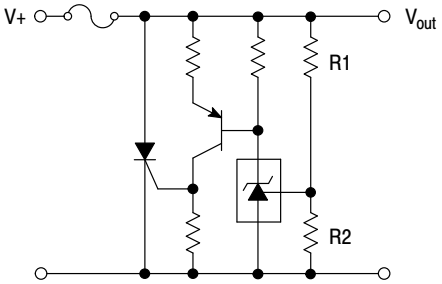

$$V_{out(trip)} = \left(1 + \frac{R1}{R2}\right) V_{ref}$$

Figure 25. SRC Crowbar

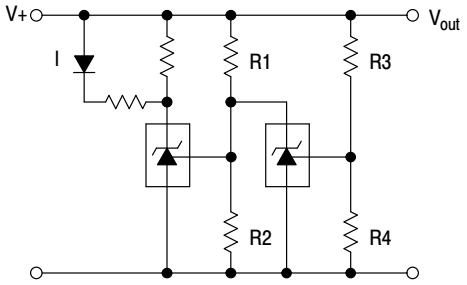

L.E.D. indicator is 'on' when V+ is between the upper and lower limits.

$$\text{Lower Limit} = \left(1 + \frac{R1}{R2}\right) V_{ref}$$

$$\text{Upper Limit} = \left(1 + \frac{R3}{R4}\right) V_{ref}$$

Figure 26. Voltage Monitor

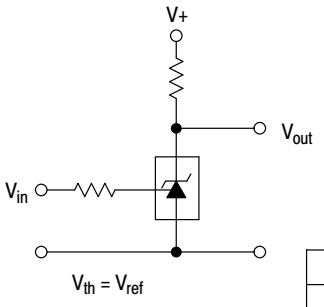

V_{in}	V_{out}
$< V_{ref}$	V+
$> V_{ref}$	≈ 2.0 V

Figure 27. Single−Supply Comparator with Temperature−Compensated Threshold

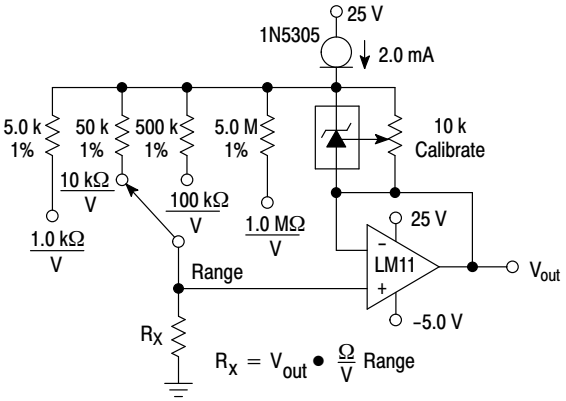

Figure 28. Linear Ohmmeter

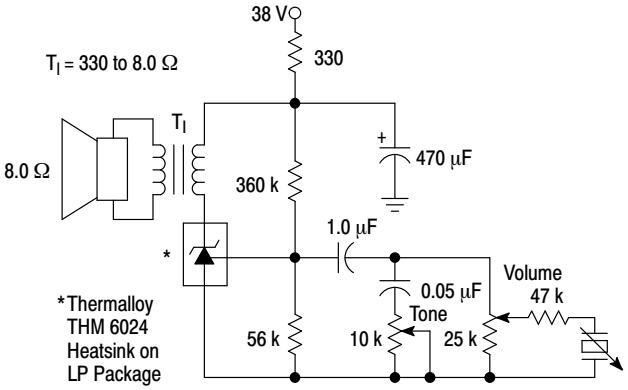

Figure 29. Simple 400 mW Phono Amplifier

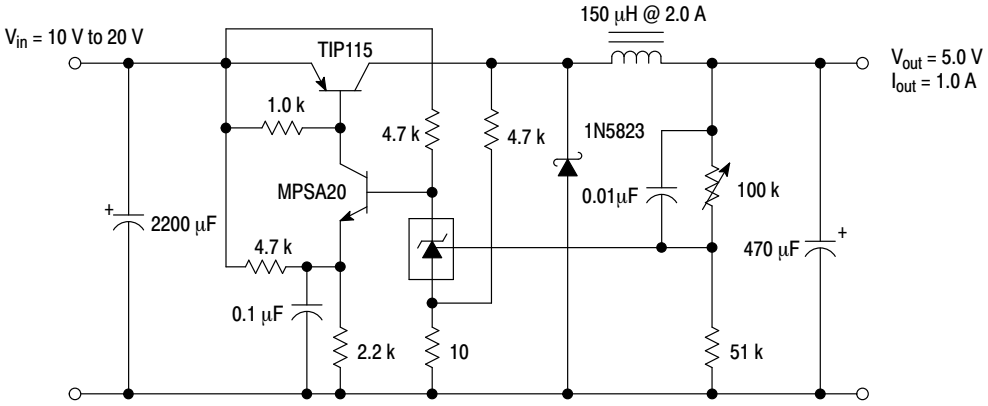

Figure 30. High Efficiency Step−Down Switching Converter

Test	Conditions	Results
Line Regulation	V_{in} = 10 V to 20 V, I_o = 1.0 A	53 mV (1.1%)
Load Regulation	V_{in} = 15 V, I_o = 0 A to 1.0 A	25 mV (0.5%)
Output Ripple	V_{in} = 10 V, I_o = 1.0 A	50 mVpp P.A.R.D.
Output Ripple	V_{in} = 20 V, I_o = 1.0 A	100 mVpp P.A.R.D.
Efficiency	V_{in} = 15 V, I_o = 1.0 A	82%

APPLICATIONS INFORMATION

The TL431 is a programmable precision reference which is used in a variety of ways. It serves as a reference voltage in circuits where a non−standard reference voltage is needed. Other uses include feedback control for driving an optocoupler in power supplies, voltage monitor, constant current source, constant current sink and series pass regulator. In each of these applications, it is critical to maintain stability of the device at various operating currents and load capacitances. In some cases the circuit designer can estimate the stabilization capacitance from the stability boundary conditions curve provided in Figure 15. However, these typical curves only provide stability information at specific cathode voltages and at a specific load condition. Additional information is needed to determine the capacitance needed to optimize phase margin or allow for process variation.

A simplified model of the TL431 is shown in Figure 31. When tested for stability boundaries, the load resistance is 150 Ω. The model reference input consists of an input transistor and a dc emitter resistance connected to the device anode. A dependent current source, Gm, develops a current whose amplitude is determined by the difference between the 1.78 V internal reference voltage source and the input transistor emitter voltage. A portion of Gm flows through compensation capacitance, C_{P2}. The voltage across C_{P2} drives the output dependent current source, Go, which is connected across the device cathode and anode.

Model component values are:

V_{ref} = 1.78 V

Gm = 0.3 + 2.7 exp (−I_C/26 mA)

where I_C is the device cathode current and Gm is in mhos

Go = 1.25 (V_{cp}2) μmhos.

Resistor and capacitor typical values are shown on the model. Process tolerances are ±20% for resistors, ±10% for capacitors, and ±40% for transconductances.

An examination of the device model reveals the location of circuit poles and zeroes:

$$P1 = \frac{1}{2\pi R_{GM} C_{P1}} = \frac{1}{2\pi * 1.0\ M * 20\ pF} = 7.96\ kHz$$

$$P2 = \frac{1}{2\pi R_{P2} C_{P2}} = \frac{1}{2\pi * 10\ M * 0.265\ pF} = 60\ kHz$$

$$Z1 = \frac{1}{2\pi R_{Z1} C_{P1}} = \frac{1}{2\pi * 15.9\ k * 20\ pF} = 500\ kHz$$

In addition, there is an external circuit pole defined by the load:

$$P_L = \frac{1}{2\pi R_L C_L}$$

Also, the transfer dc voltage gain of the TL431 is:

$$G = G_M R_{GM} Go R_L$$

Example 1:

I_C = 10 mA, R_L = 230 Ω, C_L = 0. Define the transfer gain.

The DC gain is:

$$G = G_M R_{GM} Go R_L =$$

$$(2.138)(1.0\ M)(1.25\ \mu)(230) = 615 = 56\ dB$$

$$\text{Loop gain} = G\ \frac{8.25\ k}{8.25\ k + 15\ k} = 218 = 47\ dB$$

The resulting transfer function Bode plot is shown in Figure 32. The asymptotic plot may be expressed as the following equation:

$$Av = 615\ \frac{\left(1 + \frac{jf}{500\ kHz}\right)}{\left(1 + \frac{jf}{8.0\ kHz}\right)\left(1 + \frac{jf}{60\ kHz}\right)}$$

The Bode plot shows a unity gain crossover frequency of approximately 600 kHz. The phase margin, calculated from the equation, would be 55.9 degrees. This model matches the Open−Loop Bode Plot of Figure 12. The total loop would have a unity gain frequency of about 300 kHz with a phase margin of about 44 degrees.

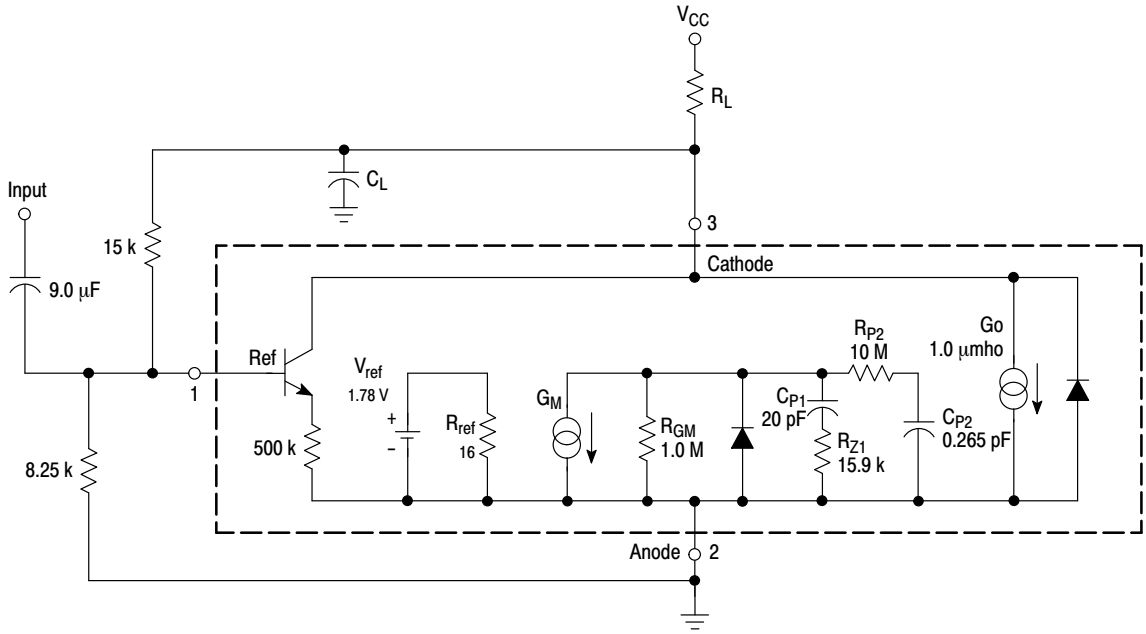

Figure 31. Simplified TL431 Device Model

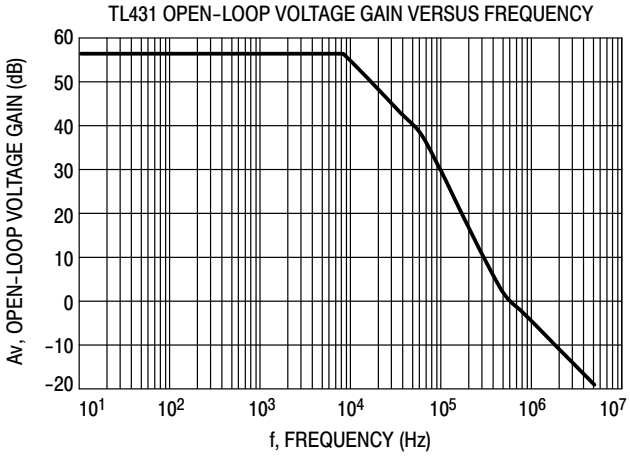

Figure 32. Example 1 Circuit Open Loop Gain Plot

Example 2.

I_C = 7.5 mA, R_L = 2.2 kΩ, C_L = 0.01 μF. Cathode tied to reference input pin. An examination of the data sheet stability boundary curve (Figure 15) shows that this value of load capacitance and cathode current is on the boundary. Define the transfer gain.

The DC gain is:

$$G = G_M R_{GM} G_o R_L =$$

$$(2.323)(1.0\ M)(1.25\ \mu)(2200) = 6389 = 76\ dB$$

The resulting open loop Bode plot is shown in Figure 33. The asymptotic plot may be expressed as the following equation:

$$Av = 615 \frac{\left(1 + \frac{jf}{500\ kHz}\right)}{\left(1 + \frac{jf}{8.0\ kHz}\right)\left(1 + \frac{jf}{60\ kHz}\right)\left(1 + \frac{jf}{7.2\ kHz}\right)}$$

Note that the transfer function now has an extra pole formed by the load capacitance and load resistance.

Note that the crossover frequency in this case is about 250 kHz, having a phase margin of about −46 degrees. Therefore, instability of this circuit is likely.

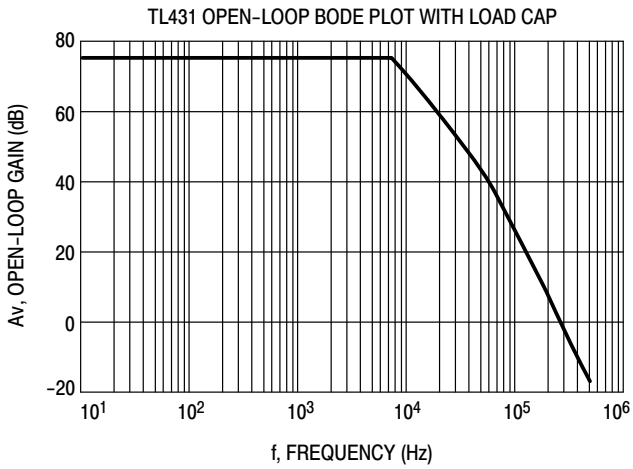

Figure 33. Example 2 Circuit Open Loop Gain Plot

With three poles, this system is unstable. The only hope for stabilizing this circuit is to add a zero. However, that can only be done by adding a series resistance to the output capacitance, which will reduce its effectiveness as a noise filter. Therefore, practically, in reference voltage applications, the best solution appears to be to use a smaller value of capacitance in low noise applications or a very large value to provide noise filtering and a dominant pole rolloff of the system.

ORDERING INFORMATION

Device	Marking Code	Operating Temperature Range	Package Code	Shipping Information†	Tolerance
TL431ACDG	AC	0°C to 70°C	SOIC−8 (Pb−Free)	98 Units / Rail	1.0%
TL431BCDG	BC				0.4%
TL431CDG	C				2.2%
TL431ACDR2G	AC			2500 / Tape & Reel	1.0%
TL431BCDR2G	BC				0.4%
TL431CDR2G	C				2.2%
TL431ACDMR2G	TAC		Micro8 (Pb−Free)	4000 / Tape & Reel	1.0%
TL431BCDMR2G	TBC				0.4%
TL431CDMR2G	T−C				2.2%
TL431ACPG	ACP		PDIP−8 (Pb−Free)	50 Units / Rail	1.0%
TL431BCPG	BCP				0.4%
TL431CPG	CP				2.2%
TL431ACLPG	ACLP		TO−92 (Pb−Free)	2000 Units / Bag	1.0%
TL431BCLPG	BCLP				0.4%
TL431CLPG	CLP				2.2%
TL431ACLPRAG	ACLP			2000 / Tape & Reel	1.0%
TL431BCLPRAG	BCLP				0.4%
TL431CLPRAG	CLP				2.2%
TL431ACLPREG	ACLP				1.0%
TL431BCLPREG	BCLP				0.4%
TL431CLPREG	CLP				2.2%
TL431ACLPRPG	ACLP			2000 / Tape & Ammo Box	1.0%
TL431BCLPRMG	BCLP			2000 / Fan−Fold	0.4%
TL431CLPRMG	CLP				2.2%
TL431CLPRPG	CLP				
TL431AIDG	AI	−40°C to 85°C	SOIC−8 (Pb−Free)	98 Units / Rail	1.0%
TL431BIDG	BI				0.4%
TL431IDG	I				2.2%
TL431AIDR2G	AI			2500s / Tape & Reel	1.0%
TL431BIDR2G	BI				0.4%
TL431IDR2G	I				2.2%
TL431AIDMR2G	TAI		Micro8 (Pb−Free)	4000 / Tape & Reel	1.0%
TL431BIDMR2G	TBI				0.4%
TL431IDMR2G	T−I				2.2%
TL431AIPG	AIP		PDIP−8 (Pb−Free)	50 Units / Rail	1.0%
TL431BIPG	BIP				0.4%
TL431IPG	IP				2.2%
TL431AILPG	AILP		TO−92 (Pb−Free)	2000 Units / Bag	1.0%
TL431BILPG	BILP				0.4%
TL431ILPG	ILP				2.2%
TL431AILPRAG	AILP			2000 / Tape & Reel	1.0%
TL431BILPRAG	BILP				0.4%
SC431ILPRAG	ILP				2.2%
TL431ILPRAG	ILP				
TL431AILPRMG	AILP			2000 / Tape & Ammo Box	1.0%
TL431AILPRPG					
TL431ILPRPG	ILP				2.2%

†For information on tape and reel specifications, including part orientation and tape sizes, please refer to our Tape and Reel Packaging Specifications Brochure, BRD8011/D.

*NCV/SCV Prefixes for Automotive and Other Applications Requiring Unique Site and Control Change Requirements; AEC−Q100 Qualified and PPAP Capable.

ORDERING INFORMATION

Device	Marking Code	Operating Temperature Range	Package Code	Shipping Information†	Tolerance
TL431BVDG	BV	−40°C to 125°C	SOIC−8 (Pb−Free)	98 Units / Rail	0.4%
TL431BVDR2G				2500 / Tape & Reel	
TL431BVDMR2G	TBV		Micro8 (Pb−Free)	4000 / Tape & Reel	
TL431BVLPG	BVLP		TO−92 (Pb−Free)	2000 Units / Bag	
TL431BVLPRAG				2000 / Tape & Reel	
TL431BVPG	BVP		PDIP−8 (Pb−Free)	50 Units / Rail	0.4%
NCV431AIDMR2G*	RAN		Micro8 (Pb−Free)	4000 / Tape & Reel	1%
SCV431AIDMR2G*	RAP				
NCV431AIDR2G*	AV		SOIC−8 (Pb−Free)	2500 / Tape & Reel	
NCV431BVDMR2G*	NVB		Micro8 (Pb−Free)	4000 / Tape & Reel	0.4%
NCV431BVDR2G*	BV		SOIC−8 (Pb−Free)	2500 / Tape & Reel	

†For information on tape and reel specifications, including part orientation and tape sizes, please refer to our Tape and Reel Packaging Specifications Brochure, BRD8011/D.

*NCV/SCV Prefixes for Automotive and Other Applications Requiring Unique Site and Control Change Requirements; AEC−Q100 Qualified and PPAP Capable.

MARKING DIAGRAMS

SOIC−8 D SUFFIX CASE 751

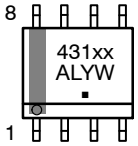

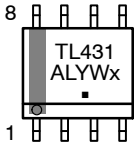

(Exception for the TL431CD and TL431ID only)

Micro8 CASE 846A

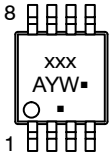

PDIP−8 CASE 626

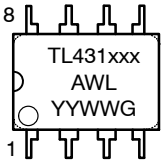

TO−92 (TO−226) CASE 29

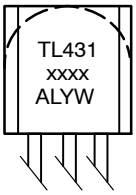

xxxx	= See Specific Marking Code
A	= Assembly Location
WL, L	= Wafer Lot
YY, Y	= Year
WW, W	= Work Week
▪ or G	= Pb−Free Package

(Note: Microdot may be in either location)

SCALE 1:1

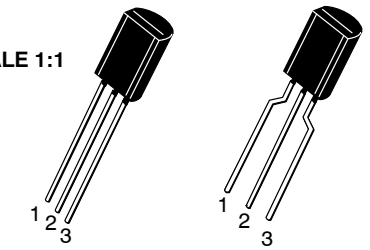

STRAIGHT LEAD BENT LEAD

TO−92 (TO−226) 1 WATT
CASE 29−10
ISSUE D

DATE 05 MAR 2021

STRAIGHT LEAD

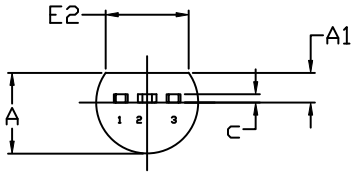

END VIEW

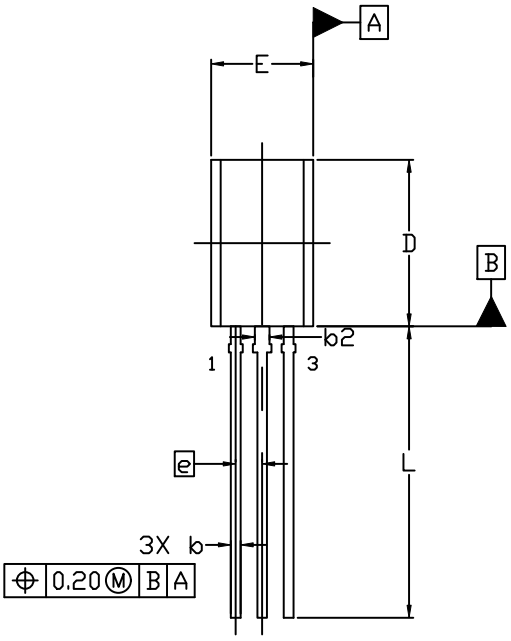

TOP VIEW

NOTES:
1. DIMENSIONING AND TOLERANCING PER ASME Y14.5M, 2009.
2. CONTROLLING DIMENSION: MILLIMETERS
3. DIMENSIONS D AND E DO NOT INCLUDE MOLD FLASH OR GATE PROTRUSIONS.
4. DIMENSION b AND b2 DOES NOT INCLUDE DAMBAR PROTRUSION. LEAD WIDTH INCLUDING PROTRUSION SHALL NOT EXCEED 0.20. DIMENSION b2 LOCATED ABOVE THE DAMBAR PORTION OF MIDDLE LEAD.

	MILLIMETERS		
DIM	MIN.	NOM.	MAX.
A	3.75	3.90	4.05
A1	1.28	1.43	1.58
b	0.38	0.465	0.55
b2	0.62	0.70	0.78
c	0.35	0.40	0.45
D	7.85	8.00	8.15
E	4.75	4.90	5.05
E2	3.90	---	---
e	1.27 BSC		
L	13.80	14.00	14.20

STYLES AND MARKING ON PAGE 3

DOCUMENT NUMBER:	**98AON52857E**	Electronic versions are uncontrolled except when accessed directly from the Document Repository. Printed versions are uncontrolled except when stamped "CONTROLLED COPY" in red.
DESCRIPTION:	**TO−92 (TO−226) 1 WATT**	**PAGE 1 OF 3**

ON Semiconductor and ON are trademarks of Semiconductor Components Industries, LLC dba ON Semiconductor or its subsidiaries in the United States and/or other countries. ON Semiconductor reserves the right to make changes without further notice to any products herein. ON Semiconductor makes no warranty, representation or guarantee regarding the suitability of its products for any particular purpose, nor does ON Semiconductor assume any liability arising out of the application or use of any product or circuit, and specifically disclaims any and all liability, including without limitation special, consequential or incidental damages. ON Semiconductor does not convey any license under its patent rights nor the rights of others.

© Semiconductor Components Industries, LLC, 2019

TO−92 (TO−226) 1 WATT
CASE 29−10
ISSUE D

DATE 05 MAR 2021

FORMED LEAD

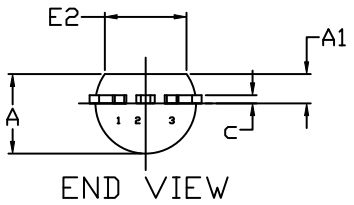

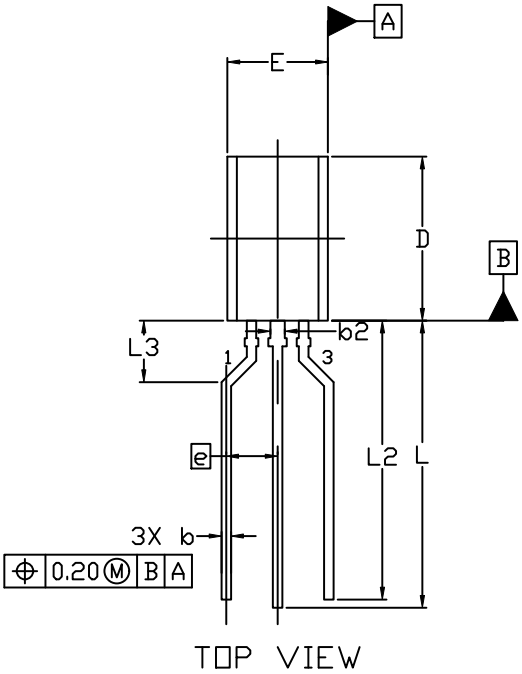

NOTES:
1. DIMENSIONING AND TOLERANCING PER ASME Y14.5M, 2009.
2. CONTROLLING DIMENSION: MILLIMETERS
3. DIMENSIONS D AND E DO NOT INCLUDE MOLD FLASH OR GATE PROTRUSIONS.
4. DIMENSION b AND b2 DOES NOT INCLUDE DAMBAR PROTRUSION. LEAD WIDTH INCLUDING PROTRUSION SHALL NOT EXCEED 0.20. DIMENSION b2 LOCATED ABOVE THE DAMBAR PORTION OF MIDDLE LEAD.

DIM	MILLIMETERS		
	MIN.	NOM.	MAX.
A	3.75	3.90	4.05
A1	1.28	1.43	1.58
b	0.38	0.465	0.55
b2	0.62	0.70	0.78
c	0.35	0.40	0.45
D	7.85	8.00	8.15
E	4.75	4.90	5.05
E2	3.90	---	---
e	2.50 BSC		
L	13.80	14.00	14.20
L2	13.20	13.60	14.00
L3	3.00 REF		

STYLES AND MARKING ON PAGE 3

DOCUMENT NUMBER:	**98AON52857E**	Electronic versions are uncontrolled except when accessed directly from the Document Repository. Printed versions are uncontrolled except when stamped "CONTROLLED COPY" in red.
DESCRIPTION:	**TO−92 (TO−226) 1 WATT**	**PAGE 2 OF 3**

ON Semiconductor and ON are trademarks of Semiconductor Components Industries, LLC dba ON Semiconductor or its subsidiaries in the United States and/or other countries. ON Semiconductor reserves the right to make changes without further notice to any products herein. ON Semiconductor makes no warranty, representation or guarantee regarding the suitability of its products for any particular purpose, nor does ON Semiconductor assume any liability arising out of the application or use of any product or circuit, and specifically disclaims any and all liability, including without limitation special, consequential or incidental damages. ON Semiconductor does not convey any license under its patent rights nor the rights of others.

© Semiconductor Components Industries, LLC, 2019

TO−92 (TO−226) 1 WATT
CASE 29−10
ISSUE D

DATE 05 MAR 2021

STYLE 1:
PIN 1. EMITTER
2. BASE
3. COLLECTOR

STYLE 2:
PIN 1. BASE
2. EMITTER
3. COLLECTOR

STYLE 3:
PIN 1. ANODE
2. ANODE
3. CATHODE

STYLE 4:
PIN 1. CATHODE
2. CATHODE
3. ANODE

STYLE 5:
PIN 1. DRAIN
2. SOURCE
3. GATE

STYLE 6:
PIN 1. GATE
2. SOURCE & SUBSTRATE
3. DRAIN

STYLE 7:
PIN 1. SOURCE
2. DRAIN
3. GATE

STYLE 8:
PIN 1. DRAIN
2. GATE
3. SOURCE & SUBSTRATE

STYLE 9:
PIN 1. BASE 1
2. EMITTER
3. BASE 2

STYLE 10:
PIN 1. CATHODE
2. GATE
3. ANODE

STYLE 11:
PIN 1. ANODE
2. CATHODE & ANODE
3. CATHODE

STYLE 12:
PIN 1. MAIN TERMINAL 1
2. GATE
3. MAIN TERMINAL 2

STYLE 13:
PIN 1. ANODE 1
2. GATE
3. CATHODE 2

STYLE 14:
PIN 1. EMITTER
2. COLLECTOR
3. BASE

STYLE 15:
PIN 1. ANODE 1
2. CATHODE
3. ANODE 2

STYLE 16:
PIN 1. ANODE
2. GATE
3. CATHODE

STYLE 17:
PIN 1. COLLECTOR
2. BASE
3. EMITTER

STYLE 18:
PIN 1. ANODE
2. CATHODE
3. NOT CONNECTED

STYLE 19:
PIN 1. GATE
2. ANODE
3. CATHODE

STYLE 20:
PIN 1. NOT CONNECTED
2. CATHODE
3. ANODE

STYLE 21:
PIN 1. COLLECTOR
2. EMITTER
3. BASE

STYLE 22:
PIN 1. SOURCE
2. GATE
3. DRAIN

STYLE 23:
PIN 1. GATE
2. SOURCE
3. DRAIN

STYLE 24:
PIN 1. EMITTER
2. COLLECTOR/ANODE
3. CATHODE

STYLE 25:
PIN 1. MT 1
2. GATE
3. MT 2

STYLE 26:
PIN 1. V_{CC}
2. GROUND 2
3. OUTPUT

STYLE 27:
PIN 1. MT
2. SUBSTRATE
3. MT

STYLE 28:
PIN 1. CATHODE
2. ANODE
3. GATE

STYLE 29:
PIN 1. NOT CONNECTED
2. ANODE
3. CATHODE

STYLE 30:
PIN 1. DRAIN
2. GATE
3. SOURCE

STYLE 31:
PIN 1. GATE
2. DRAIN
3. SOURCE

STYLE 32:
PIN 1. BASE
2. COLLECTOR
3. EMITTER

STYLE 33:
PIN 1. RETURN
2. INPUT
3. OUTPUT

STYLE 34:
PIN 1. INPUT
2. GROUND
3. LOGIC

STYLE 35:
PIN 1. GATE
2. COLLECTOR
3. EMITTER

GENERIC MARKING DIAGRAM*

XXXXX
XXXXX
ALYW▪
▪

XXXX = Specific Device Code
A = Assembly Location
L = Wafer Lot
Y = Year
W = Work Week
▪ = Pb−Free Package

(Note: Microdot may be in either location)

*This information is generic. Please refer to device data sheet for actual part marking. Pb−Free indicator, “G” or microdot “▪”, may or may not be present. Some products may not follow the Generic Marking.

DOCUMENT NUMBER:	98AON52857E	Electronic versions are uncontrolled except when accessed directly from the Document Repository. Printed versions are uncontrolled except when stamped “CONTROLLED COPY” in red.
DESCRIPTION:	TO−92 (TO−226) 1 WATT	PAGE 3 OF 3

ON Semiconductor and ON are trademarks of Semiconductor Components Industries, LLC dba ON Semiconductor or its subsidiaries in the United States and/or other countries. ON Semiconductor reserves the right to make changes without further notice to any products herein. ON Semiconductor makes no warranty, representation or guarantee regarding the suitability of its products for any particular purpose, nor does ON Semiconductor assume any liability arising out of the application or use of any product or circuit, and specifically disclaims any and all liability, including without limitation special, consequential or incidental damages. ON Semiconductor does not convey any license under its patent rights nor the rights of others.

© Semiconductor Components Industries, LLC, 2019

SCALE 1:1

PDIP–8
CASE 626–05
ISSUE P

DATE 22 APR 2015

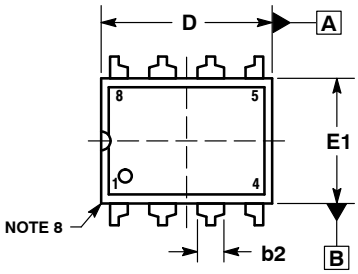

TOP VIEW

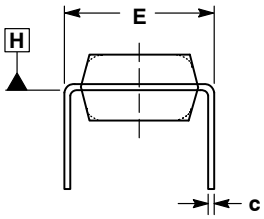

END VIEW
WITH LEADS CONSTRAINED
NOTE 5

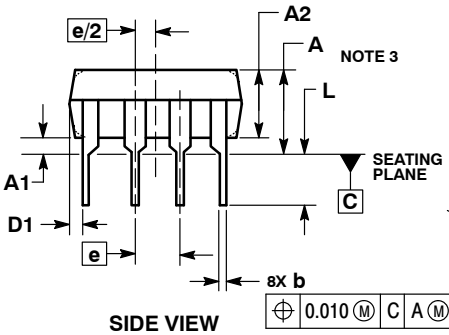

SIDE VIEW

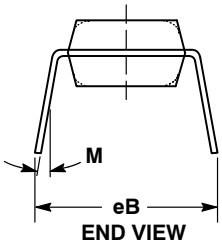

END VIEW
NOTE 6

NOTES:
1. DIMENSIONING AND TOLERANCING PER ASME Y14.5M, 1994.
2. CONTROLLING DIMENSION: INCHES.
3. DIMENSIONS A, A1 AND L ARE MEASURED WITH THE PACKAGE SEATED IN JEDEC SEATING PLANE GAUGE GS–3.
4. DIMENSIONS D, D1 AND E1 DO NOT INCLUDE MOLD FLASH OR PROTRUSIONS. MOLD FLASH OR PROTRUSIONS ARE NOT TO EXCEED 0.10 INCH.
5. DIMENSION E IS MEASURED AT A POINT 0.015 BELOW DATUM PLANE H WITH THE LEADS CONSTRAINED PERPENDICULAR TO DATUM C.
6. DIMENSION eB IS MEASURED AT THE LEAD TIPS WITH THE LEADS UNCONSTRAINED.
7. DATUM PLANE H IS COINCIDENT WITH THE BOTTOM OF THE LEADS, WHERE THE LEADS EXIT THE BODY.
8. PACKAGE CONTOUR IS OPTIONAL (ROUNDED OR SQUARE CORNERS).

	INCHES		MILLIMETERS	
DIM	MIN	MAX	MIN	MAX
A	----	0.210	---	5.33
A1	0.015	----	0.38	---
A2	0.115	0.195	2.92	4.95
b	0.014	0.022	0.35	0.56
b2	0.060 TYP		1.52 TYP	
C	0.008	0.014	0.20	0.36
D	0.355	0.400	9.02	10.16
D1	0.005	----	0.13	---
E	0.300	0.325	7.62	8.26
E1	0.240	0.280	6.10	7.11
e	0.100 BSC		2.54 BSC	
eB	----	0.430	---	10.92
L	0.115	0.150	2.92	3.81
M	----	10°	---	10°

STYLE 1:
PIN 1. AC IN
2. DC + IN
3. DC – IN
4. AC IN
5. GROUND
6. OUTPUT
7. AUXILIARY
8. V_{CC}

GENERIC MARKING DIAGRAM*

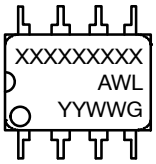

XXXX = Specific Device Code
A = Assembly Location
WL = Wafer Lot
YY = Year
WW = Work Week
G = Pb–Free Package

*This information is generic. Please refer to device data sheet for actual part marking. Pb–Free indicator, "G" or microdot " ▪", may or may not be present.

DOCUMENT NUMBER:	98ASB42420B	Electronic versions are uncontrolled except when accessed directly from the Document Repository. Printed versions are uncontrolled except when stamped "CONTROLLED COPY" in red.
DESCRIPTION:	PDIP–8	PAGE 1 OF 1

ON Semiconductor and ON are trademarks of Semiconductor Components Industries, LLC dba ON Semiconductor or its subsidiaries in the United States and/or other countries. ON Semiconductor reserves the right to make changes without further notice to any products herein. ON Semiconductor makes no warranty, representation or guarantee regarding the suitability of its products for any particular purpose, nor does ON Semiconductor assume any liability arising out of the application or use of any product or circuit, and specifically disclaims any and all liability, including without limitation special, consequential or incidental damages. ON Semiconductor does not convey any license under its patent rights nor the rights of others.

© Semiconductor Components Industries, LLC, 2019

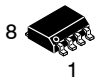

SCALE 1:1

SOIC−8 NB
CASE 751−07
ISSUE AK

DATE 16 FEB 2011

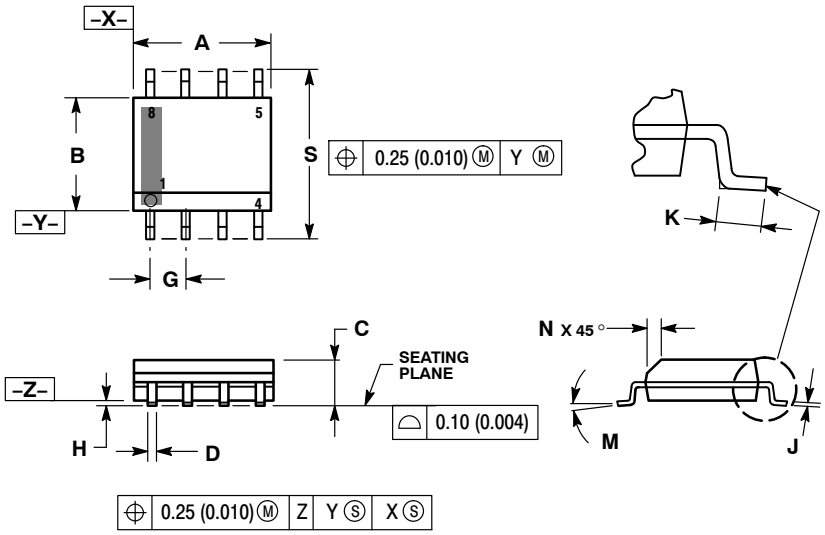

NOTES:
1. DIMENSIONING AND TOLERANCING PER ANSI Y14.5M, 1982.
2. CONTROLLING DIMENSION: MILLIMETER.
3. DIMENSION A AND B DO NOT INCLUDE MOLD PROTRUSION.
4. MAXIMUM MOLD PROTRUSION 0.15 (0.006) PER SIDE.
5. DIMENSION D DOES NOT INCLUDE DAMBAR PROTRUSION. ALLOWABLE DAMBAR PROTRUSION SHALL BE 0.127 (0.005) TOTAL IN EXCESS OF THE D DIMENSION AT MAXIMUM MATERIAL CONDITION.
6. 751−01 THRU 751−06 ARE OBSOLETE. NEW STANDARD IS 751−07.

	MILLIMETERS		INCHES	
DIM	MIN	MAX	MIN	MAX
A	4.80	5.00	0.189	0.197
B	3.80	4.00	0.150	0.157
C	1.35	1.75	0.053	0.069
D	0.33	0.51	0.013	0.020
G	1.27 BSC		0.050 BSC	
H	0.10	0.25	0.004	0.010
J	0.19	0.25	0.007	0.010
K	0.40	1.27	0.016	0.050
M	0 °	8 °	0 °	8 °
N	0.25	0.50	0.010	0.020
S	5.80	6.20	0.228	0.244

SOLDERING FOOTPRINT*

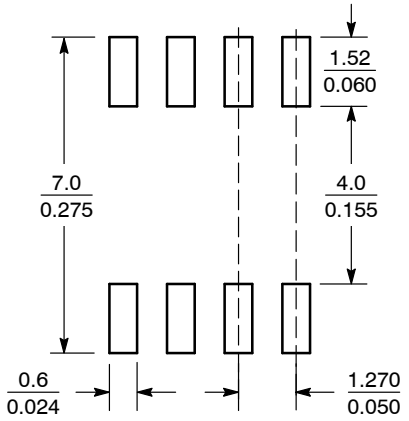

SCALE 6:1 $\left(\frac{\text{mm}}{\text{inches}}\right)$

*For additional information on our Pb−Free strategy and soldering details, please download the ON Semiconductor Soldering and Mounting Techniques Reference Manual, SOLDERRM/D.

GENERIC MARKING DIAGRAM*

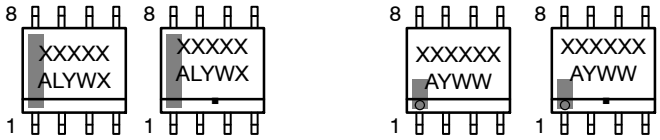

XXXXX = Specific Device Code
A = Assembly Location
L = Wafer Lot
Y = Year
W = Work Week
▪ = Pb−Free Package

XXXXXX = Specific Device Code
A = Assembly Location
Y = Year
WW = Work Week
▪ = Pb−Free Package

*This information is generic. Please refer to device data sheet for actual part marking. Pb−Free indicator, "G" or microdot "▪", may or may not be present. Some products may not follow the Generic Marking.

STYLES ON PAGE 2

DOCUMENT NUMBER:	98ASB42564B	Electronic versions are uncontrolled except when accessed directly from the Document Repository. Printed versions are uncontrolled except when stamped "CONTROLLED COPY" in red.
DESCRIPTION:	SOIC−8 NB	PAGE 1 OF 2

onsemi and onsemi are trademarks of Semiconductor Components Industries, LLC dba **onsemi** or its subsidiaries in the United States and/or other countries. **onsemi** reserves the right to make changes without further notice to any products herein. **onsemi** makes no warranty, representation or guarantee regarding the suitability of its products for any particular purpose, nor does **onsemi** assume any liability arising out of the application or use of any product or circuit, and specifically disclaims any and all liability, including without limitation special, consequential or incidental damages. **onsemi** does not convey any license under its patent rights nor the rights of others.

SOIC−8 NB
CASE 751−07
ISSUE AK

DATE 16 FEB 2011

STYLE 1:
PIN 1. EMITTER
2. COLLECTOR
3. COLLECTOR
4. EMITTER
5. EMITTER
6. BASE
7. BASE
8. EMITTER

STYLE 2:
PIN 1. COLLECTOR, DIE, #1
2. COLLECTOR, #1
3. COLLECTOR, #2
4. COLLECTOR, #2
5. BASE, #2
6. EMITTER, #2
7. BASE, #1
8. EMITTER, #1

STYLE 3:
PIN 1. DRAIN, DIE #1
2. DRAIN, #1
3. DRAIN, #2
4. DRAIN, #2
5. GATE, #2
6. SOURCE, #2
7. GATE, #1
8. SOURCE, #1

STYLE 4:
PIN 1. ANODE
2. ANODE
3. ANODE
4. ANODE
5. ANODE
6. ANODE
7. ANODE
8. COMMON CATHODE

STYLE 5:
PIN 1. DRAIN
2. DRAIN
3. DRAIN
4. DRAIN
5. GATE
6. GATE
7. SOURCE
8. SOURCE

STYLE 6:
PIN 1. SOURCE
2. DRAIN
3. DRAIN
4. SOURCE
5. SOURCE
6. GATE
7. GATE
8. SOURCE

STYLE 7:
PIN 1. INPUT
2. EXTERNAL BYPASS
3. THIRD STAGE SOURCE
4. GROUND
5. DRAIN
6. GATE 3
7. SECOND STAGE Vd
8. FIRST STAGE Vd

STYLE 8:
PIN 1. COLLECTOR, DIE #1
2. BASE, #1
3. BASE, #2
4. COLLECTOR, #2
5. COLLECTOR, #2
6. EMITTER, #2
7. EMITTER, #1
8. COLLECTOR, #1

STYLE 9:
PIN 1. EMITTER, COMMON
2. COLLECTOR, DIE #1
3. COLLECTOR, DIE #2
4. EMITTER, COMMON
5. EMITTER, COMMON
6. BASE, DIE #2
7. BASE, DIE #1
8. EMITTER, COMMON

STYLE 10:
PIN 1. GROUND
2. BIAS 1
3. OUTPUT
4. GROUND
5. GROUND
6. BIAS 2
7. INPUT
8. GROUND

STYLE 11:
PIN 1. SOURCE 1
2. GATE 1
3. SOURCE 2
4. GATE 2
5. DRAIN 2
6. DRAIN 2
7. DRAIN 1
8. DRAIN 1

STYLE 12:
PIN 1. SOURCE
2. SOURCE
3. SOURCE
4. GATE
5. DRAIN
6. DRAIN
7. DRAIN
8. DRAIN

STYLE 13:
PIN 1. N.C.
2. SOURCE
3. SOURCE
4. GATE
5. DRAIN
6. DRAIN
7. DRAIN
8. DRAIN

STYLE 14:
PIN 1. N−SOURCE
2. N−GATE
3. P−SOURCE
4. P−GATE
5. P−DRAIN
6. P−DRAIN
7. N−DRAIN
8. N−DRAIN

STYLE 15:
PIN 1. ANODE 1
2. ANODE 1
3. ANODE 1
4. ANODE 1
5. CATHODE, COMMON
6. CATHODE, COMMON
7. CATHODE, COMMON
8. CATHODE, COMMON

STYLE 16:
PIN 1. EMITTER, DIE #1
2. BASE, DIE #1
3. EMITTER, DIE #2
4. BASE, DIE #2
5. COLLECTOR, DIE #2
6. COLLECTOR, DIE #2
7. COLLECTOR, DIE #1
8. COLLECTOR, DIE #1

STYLE 17:
PIN 1. VCC
2. V2OUT
3. V1OUT
4. TXE
5. RXE
6. VEE
7. GND
8. ACC

STYLE 18:
PIN 1. ANODE
2. ANODE
3. SOURCE
4. GATE
5. DRAIN
6. DRAIN
7. CATHODE
8. CATHODE

STYLE 19:
PIN 1. SOURCE 1
2. GATE 1
3. SOURCE 2
4. GATE 2
5. DRAIN 2
6. MIRROR 2
7. DRAIN 1
8. MIRROR 1

STYLE 20:
PIN 1. SOURCE (N)
2. GATE (N)
3. SOURCE (P)
4. GATE (P)
5. DRAIN
6. DRAIN
7. DRAIN
8. DRAIN

STYLE 21:
PIN 1. CATHODE 1
2. CATHODE 2
3. CATHODE 3
4. CATHODE 4
5. CATHODE 5
6. COMMON ANODE
7. COMMON ANODE
8. CATHODE 6

STYLE 22:
PIN 1. I/O LINE 1
2. COMMON CATHODE/VCC
3. COMMON CATHODE/VCC
4. I/O LINE 3
5. COMMON ANODE/GND
6. I/O LINE 4
7. I/O LINE 5
8. COMMON ANODE/GND

STYLE 23:
PIN 1. LINE 1 IN
2. COMMON ANODE/GND
3. COMMON ANODE/GND
4. LINE 2 IN
5. LINE 2 OUT
6. COMMON ANODE/GND
7. COMMON ANODE/GND
8. LINE 1 OUT

STYLE 24:
PIN 1. BASE
2. EMITTER
3. COLLECTOR/ANODE
4. COLLECTOR/ANODE
5. CATHODE
6. CATHODE
7. COLLECTOR/ANODE
8. COLLECTOR/ANODE

STYLE 25:
PIN 1. VIN
2. N/C
3. REXT
4. GND
5. IOUT
6. IOUT
7. IOUT
8. IOUT

STYLE 26:
PIN 1. GND
2. dv/dt
3. ENABLE
4. ILIMIT
5. SOURCE
6. SOURCE
7. SOURCE
8. VCC

STYLE 27:
PIN 1. ILIMIT
2. OVLO
3. UVLO
4. INPUT+
5. SOURCE
6. SOURCE
7. SOURCE
8. DRAIN

STYLE 28:
PIN 1. SW_TO_GND
2. DASIC_OFF
3. DASIC_SW_DET
4. GND
5. V_MON
6. VBULK
7. VBULK
8. VIN

STYLE 29:
PIN 1. BASE, DIE #1
2. EMITTER, #1
3. BASE, #2
4. EMITTER, #2
5. COLLECTOR, #2
6. COLLECTOR, #2
7. COLLECTOR, #1
8. COLLECTOR, #1

STYLE 30:
PIN 1. DRAIN 1
2. DRAIN 1
3. GATE 2
4. SOURCE 2
5. SOURCE 1/DRAIN 2
6. SOURCE 1/DRAIN 2
7. SOURCE 1/DRAIN 2
8. GATE 1

DOCUMENT NUMBER:	**98ASB42564B**	Electronic versions are uncontrolled except when accessed directly from the Document Repository. Printed versions are uncontrolled except when stamped "CONTROLLED COPY" in red.
DESCRIPTION:	**SOIC−8 NB**	**PAGE 2 OF 2**

onsemi and onsemi are trademarks of Semiconductor Components Industries, LLC dba **onsemi** or its subsidiaries in the United States and/or other countries. **onsemi** reserves the right to make changes without further notice to any products herein. **onsemi** makes no warranty, representation or guarantee regarding the suitability of its products for any particular purpose, nor does **onsemi** assume any liability arising out of the application or use of any product or circuit, and specifically disclaims any and all liability, including without limitation special, consequential or incidental damages. **onsemi** does not convey any license under its patent rights nor the rights of others.

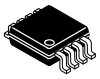

SCALE 2:1

Micro8
CASE 846A−02
ISSUE K

DATE 16 JUL 2020

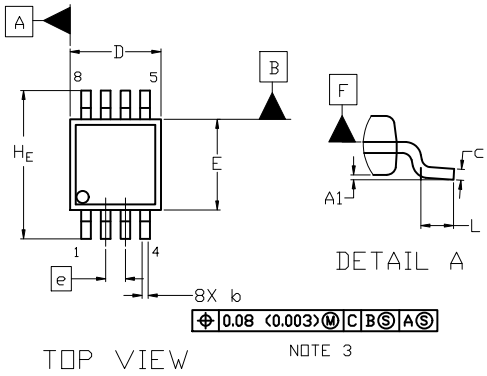

NOTES:

1. DIMENSIONING AND TOLERANCING PER ASME Y14.5M, 2009.
2. CONTROLLING DIMENSION: MILLIMETERS
3. DIMENSION b DOES NOT INCLUDE DAMBAR PROTRUSION. ALLOWABLE PROTRUSION SHALL BE 0.10 mm IN EXCESS OF MAXIMUM MATERIAL CONDITION.
4. DIMENSIONS D AND E DO NOT INCLUDE MOLD FLASH, PROTRUSION OR GATE BURRS. MOLD FLASH, PROTRUSIONS, OR GATE BURRS SHALL NOT EXCEED 0.15 mm PER SIDE. DIMENSION E DOES NOT INCLUDE INTERLEAD FLASH OR PROTRUSION. INTERLEAD FLASH OR PROTRUSION SHALL NOT EXCEED 0.25 mm PER SIDE. DIMENSIONS D AND E ARE DETERMINED AT DATUM F.
5. DATUMS A AND B ARE TO BE DETERMINED AT DATUM F.
6. A1 IS DEFINED AS THE VERTICAL DISTANCE FROM THE SEATING PLANE TO THE LOWEST POINT ON THE PACKAGE BODY.

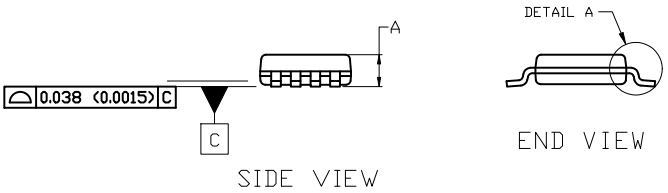

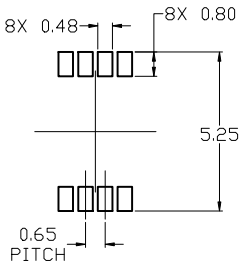

RECOMMENDED
MOUNTING FOOTPRINT

* For additional information on our Pb-Free strategy and soldering details, please download the ON Semiconductor Soldering and Mounting Techniques Reference Manual, SOLDERRM/D.

DIM	MILLIMETERS		
	MIN.	NOM.	MAX.
A	---	---	1.10
A1	0.05	0.08	0.15
b	0.25	0.33	0.40
c	0.13	0.18	0.23
D	2.90	3.00	3.10
E	2.90	3.00	3.10
e	0.65 BSC		
H_E	4.75	4.90	5.05
L	0.40	0.55	0.70

GENERIC
MARKING DIAGRAM*

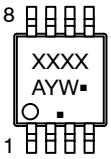

XXXX = Specific Device Code
A = Assembly Location
Y = Year
W = Work Week
▪ = Pb−Free Package

(Note: Microdot may be in either location)

*This information is generic. Please refer to device data sheet for actual part marking. Pb−Free indicator, "G" or microdot "▪", may or may not be present. Some products may not follow the Generic Marking.

STYLE 1:
PIN 1. SOURCE
2. SOURCE
3. SOURCE
4. GATE
5. DRAIN
6. DRAIN
7. DRAIN
8. DRAIN

STYLE 2:
PIN 1. SOURCE 1
2. GATE 1
3. SOURCE 2
4. GATE 2
5. DRAIN 2
6. DRAIN 2
7. DRAIN 1
8. DRAIN 1

STYLE 3:
PIN 1. N-SOURCE
2. N-GATE
3. P-SOURCE
4. P-GATE
5. P-DRAIN
6. P-DRAIN
7. N-DRAIN
8. N-DRAIN

DOCUMENT NUMBER:	98ASB14087C	Electronic versions are uncontrolled except when accessed directly from the Document Repository. Printed versions are uncontrolled except when stamped "CONTROLLED COPY" in red.
DESCRIPTION:	MICRO8	PAGE 1 OF 1

ON Semiconductor and ON are trademarks of Semiconductor Components Industries, LLC dba ON Semiconductor or its subsidiaries in the United States and/or other countries. ON Semiconductor reserves the right to make changes without further notice to any products herein. ON Semiconductor makes no warranty, representation or guarantee regarding the suitability of its products for any particular purpose, nor does ON Semiconductor assume any liability arising out of the application or use of any product or circuit, and specifically disclaims any and all liability, including without limitation special, consequential or incidental damages. ON Semiconductor does not convey any license under its patent rights nor the rights of others.

© Semiconductor Components Industries, LLC, 2019

onsemi, onsemi, and other names, marks, and brands are registered and/or common law trademarks of Semiconductor Components Industries, LLC dba "**onsemi**" or its affiliates and/or subsidiaries in the United States and/or other countries. **onsemi** owns the rights to a number of patents, trademarks, copyrights, trade secrets, and other intellectual property. A listing of **onsemi**'s product/patent coverage may be accessed at www.onsemi.com/site/pdf/Patent−Marking.pdf. **onsemi** reserves the right to make changes at any time to any products or information herein, without notice. The information herein is provided "as−is" and **onsemi** makes no warranty, representation or guarantee regarding the accuracy of the information, product features, availability, functionality, or suitability of its products for any particular purpose, nor does **onsemi** assume any liability arising out of the application or use of any product or circuit, and specifically disclaims any and all liability, including without limitation special, consequential or incidental damages. Buyer is responsible for its products and applications using **onsemi** products, including compliance with all laws, regulations and safety requirements or standards, regardless of any support or applications information provided by **onsemi**. "Typical" parameters which may be provided in **onsemi** data sheets and/or specifications can and do vary in different applications and actual performance may vary over time. All operating parameters, including "Typicals" must be validated for each customer application by customer's technical experts. **onsemi** does not convey any license under any of its intellectual property rights nor the rights of others. **onsemi** products are not designed, intended, or authorized for use as a critical component in life support systems or any FDA Class 3 medical devices or medical devices with a same or similar classification in a foreign jurisdiction or any devices intended for implantation in the human body. Should Buyer purchase or use **onsemi** products for any such unintended or unauthorized application, Buyer shall indemnify and hold **onsemi** and its officers, employees, subsidiaries, affiliates, and distributors harmless against all claims, costs, damages, and expenses, and reasonable attorney fees arising out of, directly or indirectly, any claim of personal injury or death associated with such unintended or unauthorized use, even if such claim alleges that **onsemi** was negligent regarding the design or manufacture of the part. **onsemi** is an Equal Opportunity/Affirmative Action Employer. This literature is subject to all applicable copyright laws and is not for resale in any manner.

ADDITIONAL INFORMATION

TECHNICAL PUBLICATIONS:
Technical Library: www.onsemi.com/design/resources/technical−documentation
onsemi Website: www.onsemi.com

ONLINE SUPPORT: www.onsemi.com/support
For additional information, please contact your local Sales Representative at
www.onsemi.com/support/sales

Looking for pricing, stock, or lifecycle information?

Click below to explore more details on WIN SOURCE:

- View TL431BIDG on WIN SOURCE
- ON Semiconductor Information

Optimize Your Supply Chain with WIN SOURCE Solutions

- Global Sourcing Solution
- Obsolete Management
- Cost Control Management
- Shortage Management
- Alternative Solution
- Excess Inventory Management