THE DATASHEET OF

DG1208EUE+

www.win-source.net 0086-755-83957316

Click here to ask about the production status of specific part numbers.

DG1208/DG1209 Low-Leakage, Single 8-Channel and Dual 4-Channel, Analog Multiplexers

General Description

The DG1208 and DG1209 are low-leakage, low-charge-injection, single 8-channel or dual 4-channel multiplexing switch devices. The DG1208 uses three selection inputs A2, A1, and A0 to determine the switching logic; the DG1209 uses two selection inputs A1 and A0. On both devices, an enable (EN) input is used to enable or disable the device.

The low capacitance and low charge injection of the DG1208/DG1209 make them ideal for automatic test equipment systems, data acquisition systems and sample-and-hold systems where low glitch and fast settling time are required.

The DG1208/DG1209 are available in 4mm x 4mm 16-lead TQFN or 16-lead TSSOP packages. The devices are specified for operation over the -40°C to +85°C temperature range.

Applications

- Automatic Test Equipment Systems
- Data Acquisition Systems
- Sample-and-Hold Systems
- Communication Systems
- Audio and Video Routing

Benefits and Features

- Distortion-Free Measurement
  - 100Ω (typ) On Resistance
  - ≤ 1nA (max) On/Off-Leakage Current at +85°C
  - ≤ 0.5pC (typ) Charge Injection
- Wide Supply Range with Low Supply Current
  - 40µA (typ) Quiescent Current at Room Temperature
  - Fully Specified with ±15V Bipolar Supplies or +12V Single Supply
  - Rail-to-Rail Operation
- Flexible Design Option
  - GPIO-Compatible Control Inputs
  - EN Input to Enable/Disable Device
  - Available in both 16-TQFN and 16-TSSOP Packages
  - -40°C to +85°C Temperature Range

***Ordering Information* appears at end of data sheet.**

19-100865; Rev 1; 8/21

maxim integrated™

Simplified Block Diagram

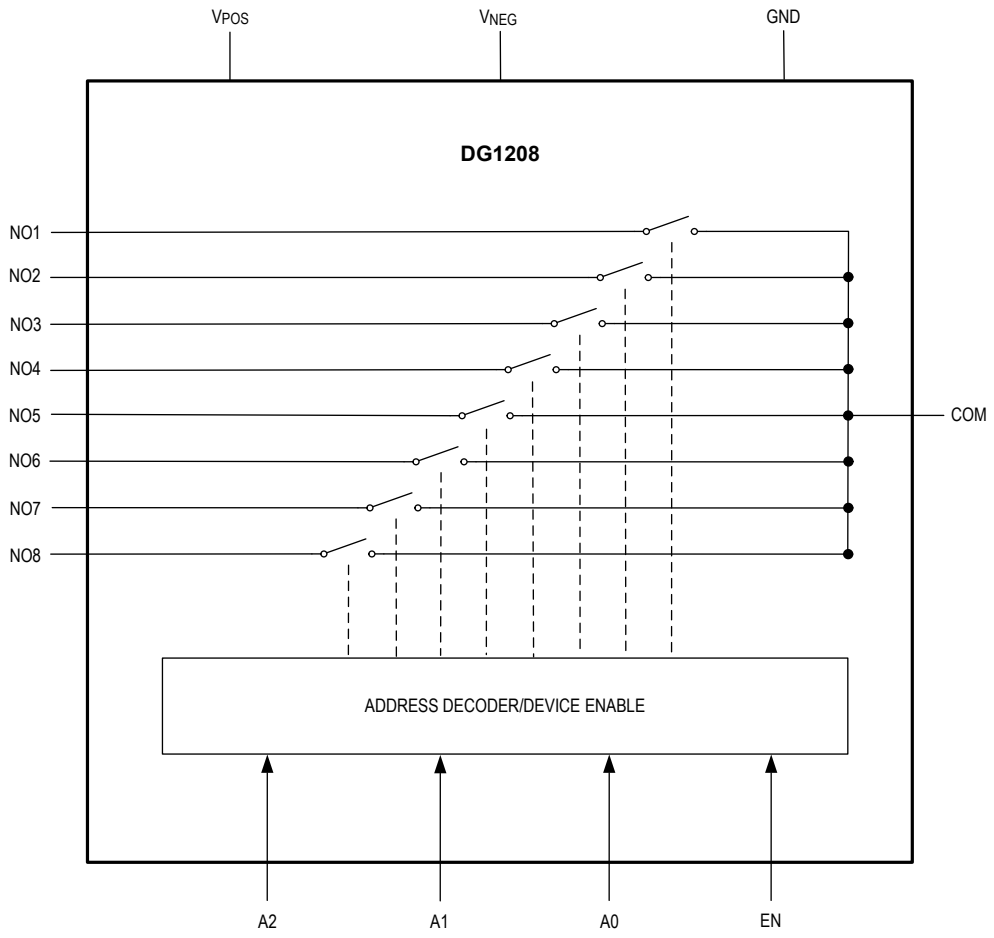

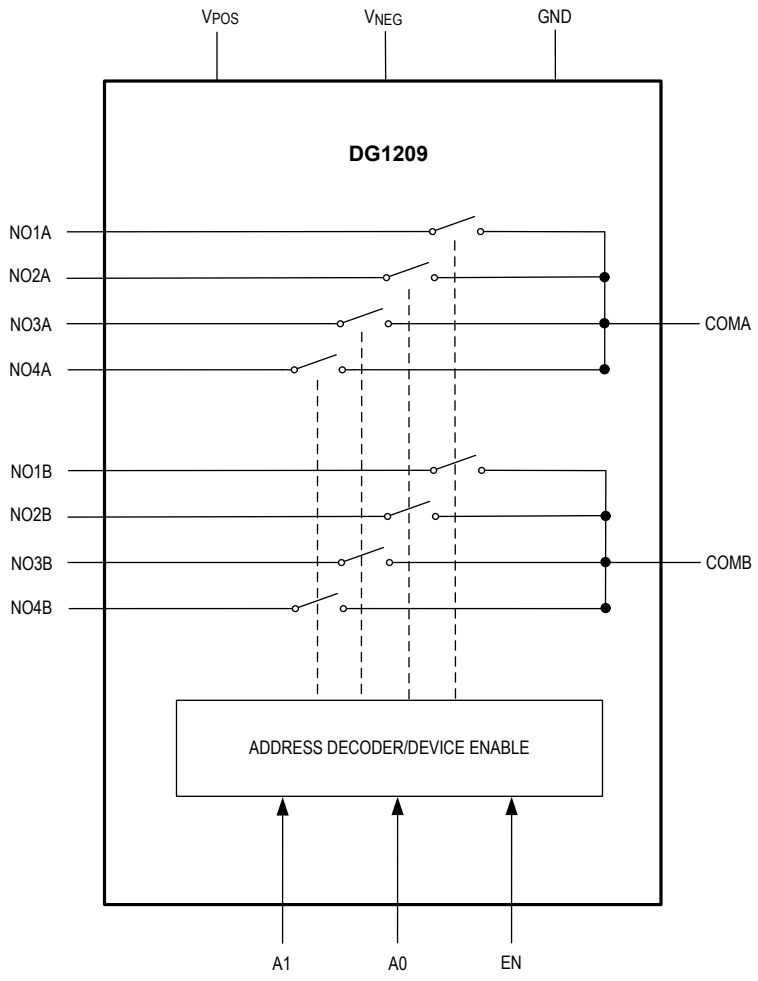
VPOS
VNEG
GND
DG1209
NO1A
NO2A
NO3A
NO4A
COMA
NO1B
NO2B
NO3B
NO4B
COMB
ADDRESS DECODER/DEVICE ENABLE
A1
A0
EN

Absolute Maximum Ratings

V_{POS} to GND ..... -0.3V to +20.5V
V_{NEG} to GND ..... -20.5V to +0.3V
V_{POS} to V_{NEG} ..... -0.3V to +41V
A_, EN to GND ..... -0.3V to (V_{POS} + 0.3V)
NO_, COM_ to GND..... (V_{NEG} - 0.3V) to (V_{POS} + 0.3V)
Continuous Current Into Any Pin ..... ±30mA
Continuous Power Dissipation (16 TQFN)
Single-Layer Board (T_A = +70°C, derate 16.90mW/°C above +70°C)..... 1349.10mW
Multilayer Board (T_A = +70°C, derate 25mW/°C above +70°C)..... 2000mW
Continuous Power Dissipation (16 TSSOP)
Single-Layer Board (T_A = +70°C, derate 9.40mW/°C above +70°C) 754.70mW
Multilayer Board (T_A = +70°C, derate 11.10mW/°C above +70°C) 888.90mW
Operating Temperature Range .....-40°C to 85°C
Junction Temperature .....+150°C
Storage Temperature Range .....-40°C to +150°C
Soldering Temperature (reflow) .....+260°C

Stresses beyond those listed under "Absolute Maximum Ratings" may cause permanent damage to the device. These are stress ratings only, and functional operation of the device at these or any other conditions beyond those indicated in the operational sections of the specifications is not implied. Exposure to absolute maximum rating conditions for extended periods may affect device reliability.

Package Information

16 TQFN

Package Code	T1644+4
Outline Number	21-0139
Land Pattern Number	90-0070
THERMAL RESISTANCE, SINGLE-LAYER BOARD	
Junction to Ambient (θ_{JA})	59.30°C/W
Junction to Case (θ_{JC})	6°C/W
THERMAL RESISTANCE, FOUR-LAYER BOARD	
Junction to Ambient (θ_{JA})	40°C/W
Junction to Case (θ_{JC})	6°C/W

16 TSSOP

Package Code	U16+1
Outline Number	21-0066
Land Pattern Number	90-0117
THERMAL RESISTANCE, SINGLE-LAYER BOARD	
Junction to Ambient (θ_{JA})	106°C/W
Junction to Case (θ_{JC})	27°C/W
THERMAL RESISTANCE, FOUR-LAYER BOARD	
Junction to Ambient (θ_{JA})	90°C/W
Junction to Case (θ_{JC})	27°C/W

For the latest package outline information and land patterns (footprints), go to *www.maximintegrated.com/packages*. Note that a "+", "#", or "-" in the package code indicates RoHS status only. Package drawings may show a different suffix character, but the drawing pertains to the package regardless of RoHS status.

Package thermal resistances were obtained using the method described in JEDEC specification JESD51-7, using a four-layer board. For detailed information on package thermal considerations, refer to *www.maximintegrated.com/thermal-tutorial*.

Electrical Characteristics - ±15V Bipolar Supplies

(V_{POS} = +15V, V_{NEG} = -15V, GND = 0V, T_A = -40°C to 85°C, unless otherwise noted.) (*Note 1*)

PARAMETER	SYMBOL	CONDITIONS	MIN	TYP	MAX	UNITS
POWER SUPPLY						
Positive Power-Supply Voltage	V_{POS}		+5		+20	V
Negative Power-Supply Voltage	V_{NEG}		-20		-5	V
Positive Power-Supply Current	I_{POS}	EN = A_ = 0V		40	70	µA
		EN = A_ = 2.4V		40	80	
Negative Power-Supply Current	I_{NEG}	EN = A_ = 0V	-1		+1	µA
		EN = A_ = 2.4V	-1		+1	
ANALOG SWITCH						
Analog-Signal Voltage Range	$V_{NO_}$, $V_{COM_}$		V_{NEG}		V_{POS}	V
On-Resistance	R_{ON}	$V_{COM_}$ = 0V, ±5V, ±10V, $I_{COM_}$ = 1mA (*Note 2*)		100	160	Ω
On-Resistance Match Between Channels	ΔR_{ON}	$V_{COM_}$ = 0V, ±5V, ±10V, $I_{COM_}$ = 1mA (*Note 2*)		10	30	Ω
On-Resistance Flatness	R_{FLAT}	$V_{COM_}$ = -5V, 0V, +5V, $I_{COM_}$ = 1mA (*Note 3*)		17	25	Ω
NO_ Off Capacitance	C_{NO_OFF}	$V_{NO_}$ = 0.5V_{P-P}, f_{SW} = 1MHz		4		pF
COM_ Off Capacitance	C_{COM_OFF}	$V_{COM_}$ = 0.5V_{P-P}, f_{SW} = 1MHz		15		pF
COM_ On Capacitance	C_{COM_ON}	$V_{COM_}$ = 0.5V_{P-P}, f_{SW} = 1MHz		10		pF
NO_ Off-Leakage Current	I_{NO_OFF}	$V_{NO_}$ = ±10V, $V_{COM_}$ = ∓10V (*Note 4*)	-1		+1	nA
COM_ Off-Leakage Current	I_{COM_OFF}	DG1208, $V_{NO_}$ = +1/+10V, $V_{COM_}$ = +10/+1V (*Note 5*)	-1		+1	nA
		DG1209, $V_{NO_}$ = +1/+10V, $V_{COM_}$ = +10/+1V (*Note 5*)	-1		+1	
COM_ On-Leakage Current	I_{COM_ON}	DG1208, $V_{NO_}$ = $V_{COM_}$ = ±10V	-1		+1	nA
		DG1209, $V_{NO_}$ = $V_{COM_}$ = ±10V	-1		+1	
DYNAMIC CHARACTERISTICS						
Turn-On Time	t_{ON}	*Figure 1*, V_S = 10V		200	400	ns
Turn-Off Time	t_{OFF}	*Figure 1*, V_S = 10V		300	400	ns
Break-Before-Make Time	t_{BBM}	*Figure 2*, V_S = 10V	50			ns
Total Transition Time	t_{TT}	*Figure 3*, V_S = 10V			400	ns
-3dB Bandwidth	f_{BW}	DG1208, *Figure 4*, R_S = R_L = 50Ω		200		MHz
		DG1209, *Figure 4*, R_S = R_L = 50Ω		250		
Total Harmonic Distortion Plus Noise	THD+N	*Figure 5*, R_S = 50Ω, R_L = 10kΩ, V_S = 5V_{RMS}, f_{SW} = 20Hz to 20kHz		0.1		%
Off-Isolation		*Figure 6*, R_S = R_L = 50Ω, $V_{NO_}$ = 0.5V_{P-P}, f_{SW} = 1MHz		-80		dB
Crosstalk		*Figure 7*, R_S = R_L = 50Ω, $V_{NO_}$ = 0.5V_{P-P}, f_{SW} = 1MHz		-80		dB

Electrical Characteristics - ±15V Bipolar Supplies (continued)

(V_{POS} = +15V, V_{NEG} = -15V, GND = 0V, T_A = -40°C to 85°C, unless otherwise noted.) (Note 1)

PARAMETER	SYMBOL	CONDITIONS	MIN	TYP	MAX	UNITS
Charge Injection	C_{INJ}	Figure 8, R_S = 0Ω, V_S = 0V		0.5		pC
DIGITAL INPUTS (A_, EN)						
Input Logic High Voltage	V_{IH}		2.4			V
Input Logic Low Voltage	V_{IL}				0.8	V
Input-Leakage Current	I_{IN}		-5		+40	µA

Electrical Characteristics - +12V Single Supply

(V_{POS} = +12V, V_{NEG} = GND = 0V, T_A = -40°C to 85°C, unless otherwise noted.) (Note 1)

PARAMETER	SYMBOL	CONDITIONS	MIN	TYP	MAX	UNITS
POWER SUPPLY						
Positive Power-Supply Voltage	V_{POS}		10	12	20	V
Positive Power-Supply Current	I_{POS}	EN = A_ = 0V			70	µA
		EN = A_ = 2.4V			90	
ANALOG SWITCH						
Analog-Signal Voltage Range	$V_{NO_}$, $V_{COM_}$		0		V_{POS}	V
On-Resistance	R_{ON}	$V_{COM_}$ = 3V, 6V, 9V, $I_{COM_}$ = 1mA (Note 6)		165	250	Ω
On-Resistance Match Between Channels	ΔR_{ON}	$V_{COM_}$ = 3V, 6V, 9V, $I_{COM_}$ = 1mA (Note 6)		18	50	Ω
On-Resistance Flatness	R_{FLAT}	$V_{COM_}$ = 3V, 6V, 9V, $I_{COM_}$ = 1mA (Note 6)		15	50	Ω
NO_ Off Capacitance	C_{NO_OFF}	$V_{NO_}$ = 0.5V_{P-P}, f_{SW} = 1MHz		4		pF
COM_ Off Capacitance	C_{COM_OFF}	$V_{COM_}$ = 0.5V_{P-P}, f_{SW} = 1MHz		15		pF
COM_ On Capacitance	C_{COM_ON}	$V_{COM_}$ = 0.5V_{P-P}, f_{SW} = 1MHz		10		pF
NO_ Off-Leakage Current	I_{NO_OFF}	$V_{NO_}$ = +1/+10V, $V_{COM_}$ = +10/+1V (Note 7)	-1		+1	nA
COM_ Off-Leakage Current	I_{COM_OFF}	DG1208, $V_{NO_}$ = +1/+10V, $V_{COM_}$ = +10/+1V (Note 7)	-1		+1	nA
		DG1209, $V_{NO_}$ = +1/+10V, $V_{COM_}$ = +10/+1V (Note 7)	-1		+1	
COM_ On-Leakage Current	I_{COM_ON}	DG1208, $V_{NO_}$ = $V_{COM_}$ = +1V or +10V	-1		+1	nA
		DG1209, $V_{NO_}$ = $V_{COM_}$ = +1V or +10V	-1		+1	
DYNAMIC CHARACTERISTICS						
Turn-On Time	t_{ON}	Figure 1, V_S = 10V		400	600	ns
Turn-Off Time	t_{OFF}	Figure 1, V_S = 10V		250	500	ns
Break-Before-Make Time	t_{BBM}	Figure 2, V_S = 10V	50			ns
Total Transition Time	t_{TT}	Figure 3, V_S = 10V			700	ns
-3dB Bandwidth	f_{BW}	DG1208, Figure 4, R_S = R_L = 50Ω		200		MHz
		DG1209, Figure 4, R_S = R_L = 50Ω		250		

Electrical Characteristics - +12V Single Supply (continued)

(V_{POS} = +12V, V_{NEG} = GND = 0V, T_A = -40°C to 85°C, unless otherwise noted.) (*Note 1*)

PARAMETER	SYMBOL	CONDITIONS	MIN	TYP	MAX	UNITS
Total Harmonic Distortion Plus Noise	THD+N	*Figure 5*, R_S = 50Ω, R_L = 10kΩ, V_S = $5V_{RMS}$, f_{SW} = 20Hz to 20kHz,		0.1		%
Off-Isolation		*Figure 6*, R_S = R_L = 50Ω, $V_{NO_}$ = $0.5V_{P-P}$, f_{SW} = 1MHz		-80		dB
Crosstalk		Figure 7, R_S = R_L = 50Ω, $V_{NO_}$ = $0.5V_{P-P}$, f_{SW} = 1MHz		-80		dB
Charge Injection	C_{INJ}	*Figure 8*, V_S = 6V, R_S = 0Ω		0.5		pC
DIGITAL INPUTS (A_, EN)						
Input Logic High Voltage	V_{IH}		2.4			V
Input Logic Low Voltage	V_{IL}				0.8	V
Input-Leakage Current	I_{IN}		-5		+30	µA

Note 1: Limits are 100% tested at T_A = +85°C. Limits over the operating temperature range and relevant supply-voltage range are guaranteed by design and characterization.

Note 2: On Resistance (R_{ON}) and On-Resistance Match Between Channels (ΔR_{ON}) are measured when the output channel is turned on. The output (COM_) is sourced with 1mA current while biased at one of these levels: 0V, ±5V, or ±10V.

Note 3: On-Resistance Flatness (R_{FLAT}) is measured when the output channel is turned on. The output (COM_) is sourced with 1mA current while biased at one of these levels: -5V, 0V, or +5V.

Note 4: NO_ Off-Leakage Current (I_{NO_OFF}) is measured when the output channel is switched off while the input (NO_) is biased at +10V and output (COM_) at -10V, or while the input is biased at -10V and output at +10V.

Note 5: COM_ Off-Leakage Current (I_{COM_OFF}) is measured when the output channel is switched off while the input (NO_) is biased at +1V and output (COM_) at +10V, or while the input is biased at +10V and output at +1V.

Note 6: On Resistance (R_{ON}), On-Resistance Match Between Channels (ΔR_{ON}), and On-Resistance Flatness (R_{FLAT}) are measured when the output channel is turned on. The output (COM_) is sourced with 1mA current while biased at one of these levels: 3V, 6V, or 9V.

Note 7: NO_ Off-Leakage Current (I_{NO_OFF}) and COM_ Off-Leakage Current (I_{COM_OFF}) are measured when the output channel is switched off while the input (NO_) is biased at +1V and output (COM_) at +10V, or while the input is biased at +10V and output at +1V.

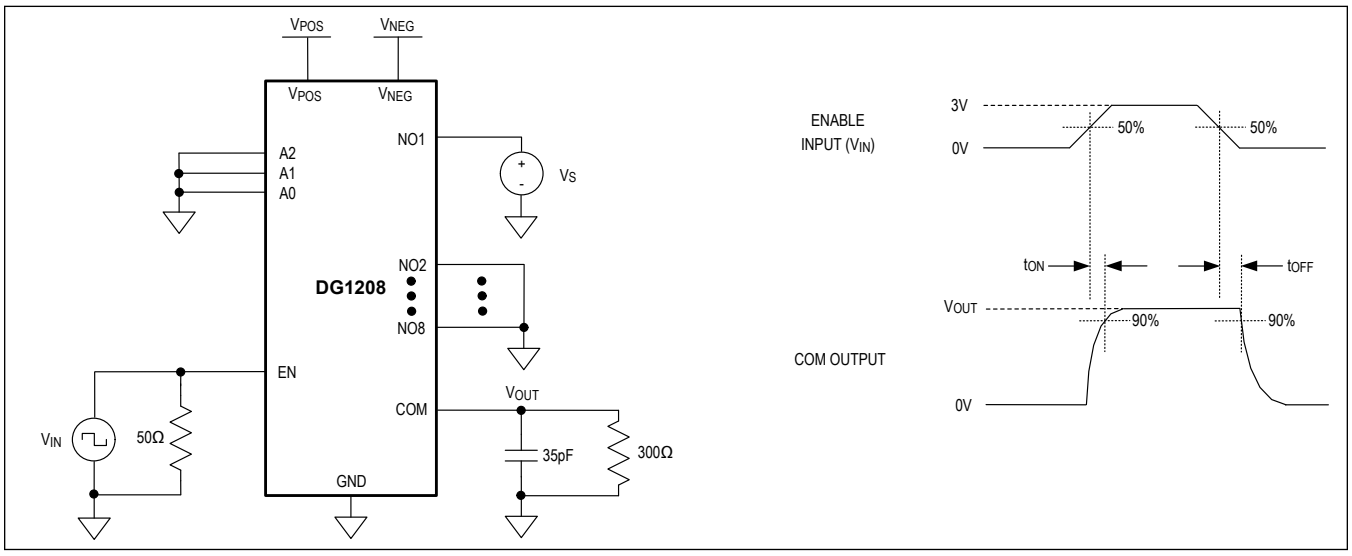

Figure 1. Turn-On Time and Turn-Off Time (Similar Connection for DG1209)

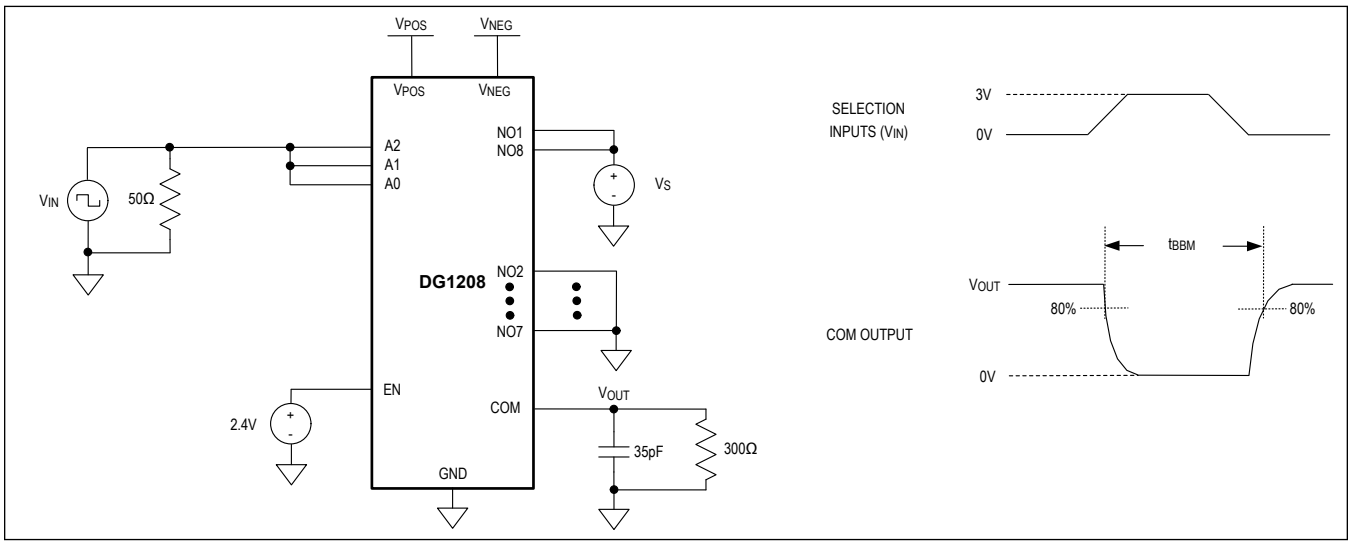

Figure 2. Break-Before-Make Time (Similar Connection for DG1209)

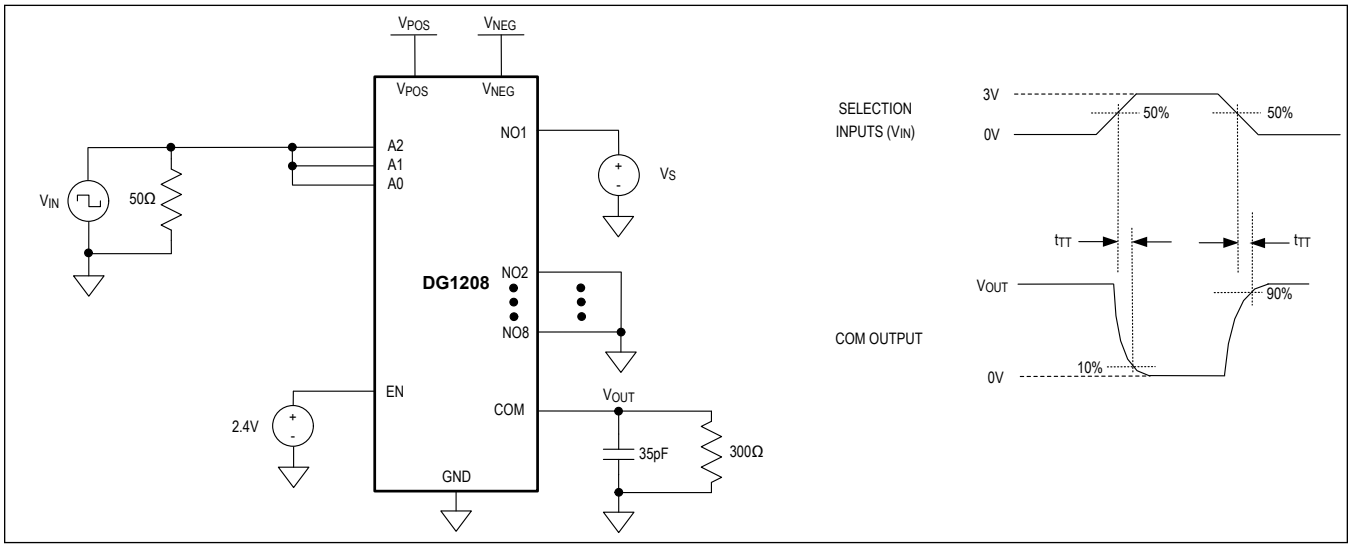

Figure 3. Total Transition Time (Similar Connection for DG1209)

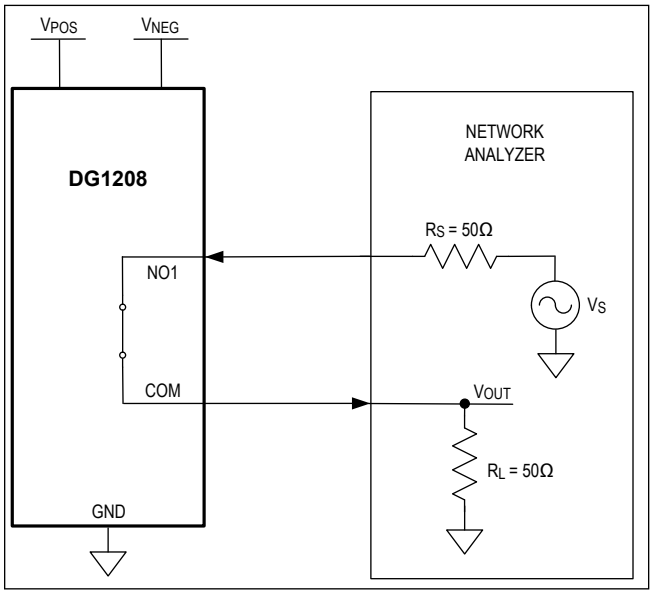

Figure 4. -3dB Bandwidth (Similar Connection for DG1209)

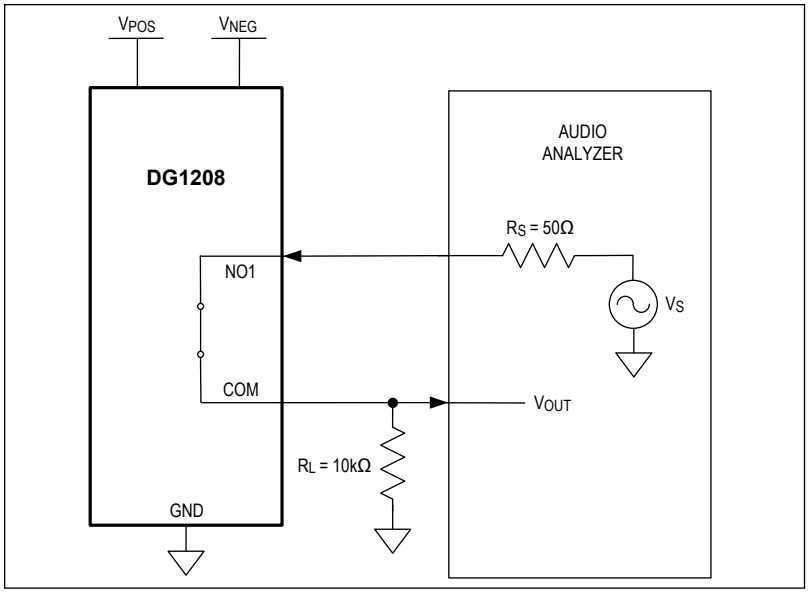

Figure 5. Total Harmonic Distortion Plus Noise (Similar Connection for DG1209)

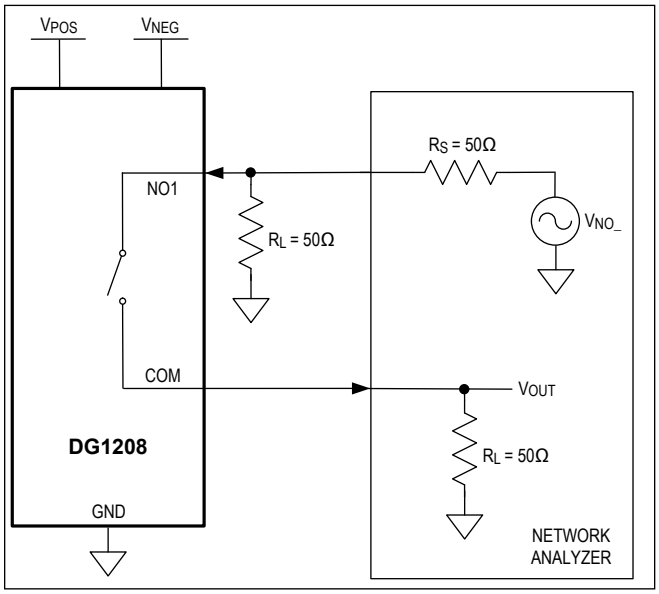

Figure 6. Off Isolation (Similar Connection for DG1209)

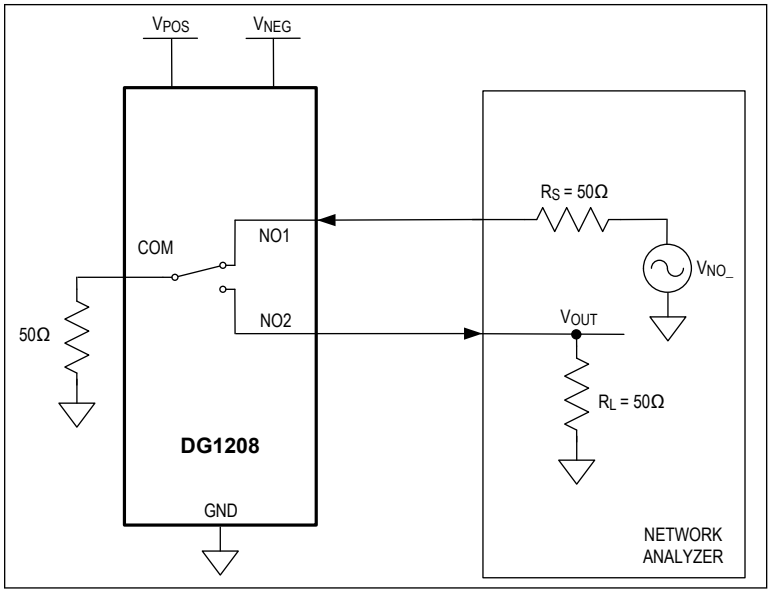

Figure 7. Crosstalk (Similar Connection for DG1209)

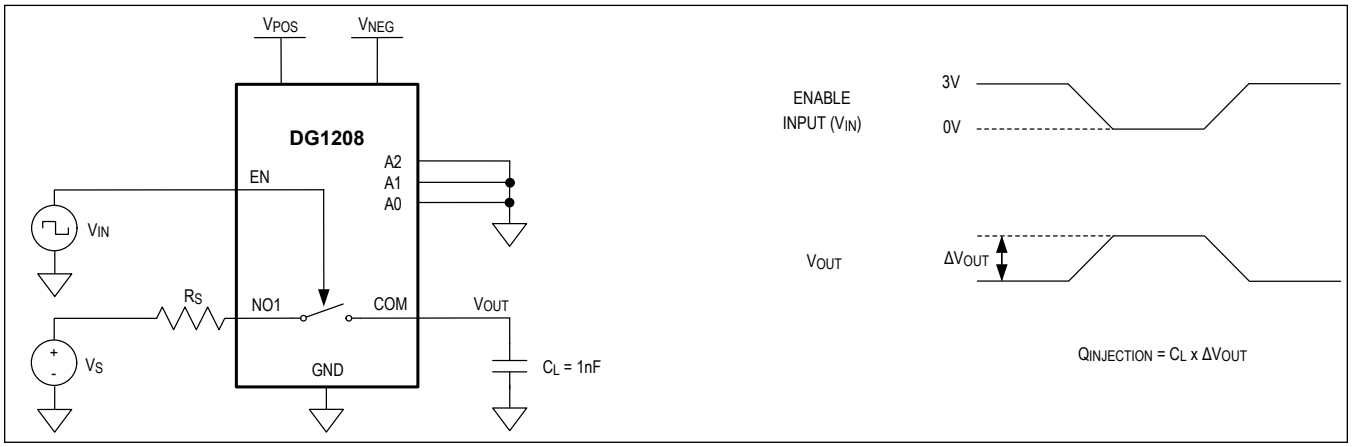

Figure 8. Charge Injection (Similar Connection for DG1209)

Typical Operating Characteristics

(T_A = 25°C, unless otherwise noted.)

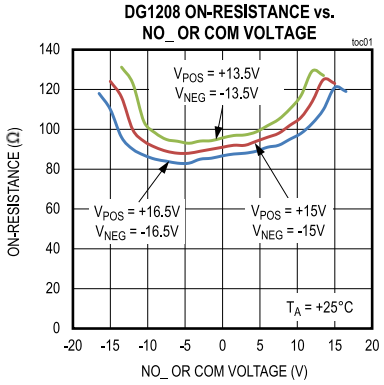

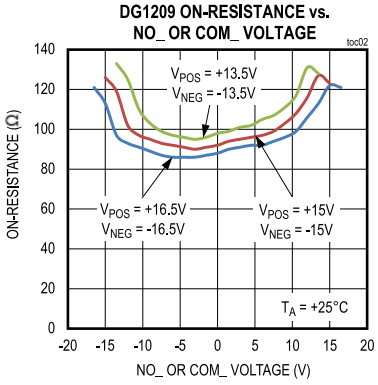

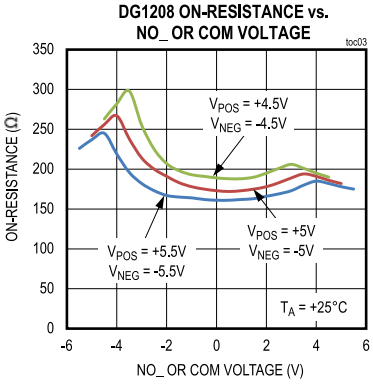

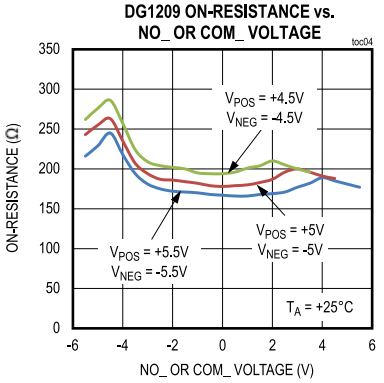

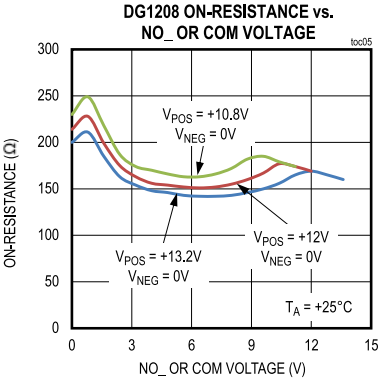

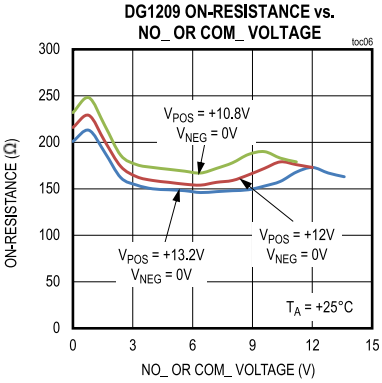

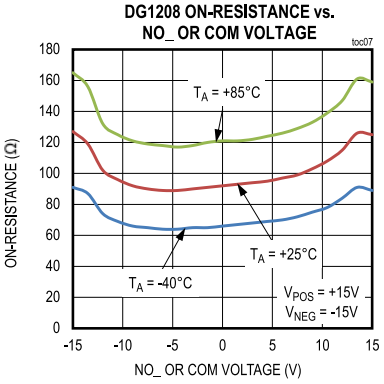

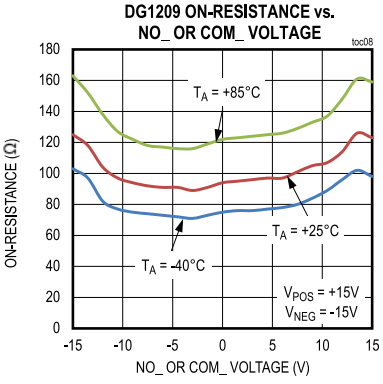

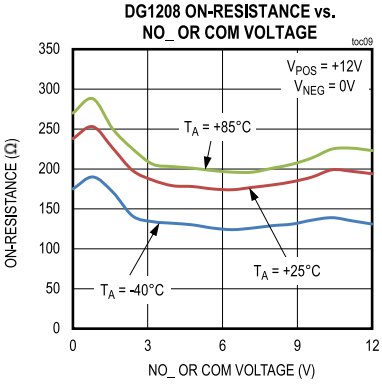

Typical Operating Characteristics (continued)

(T_A = 25°C, unless otherwise noted.)

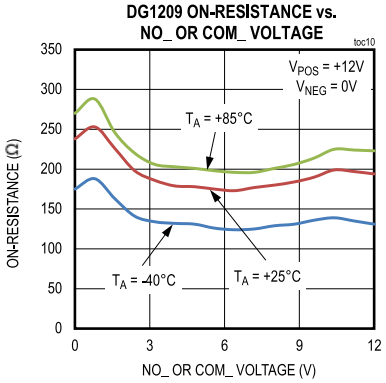

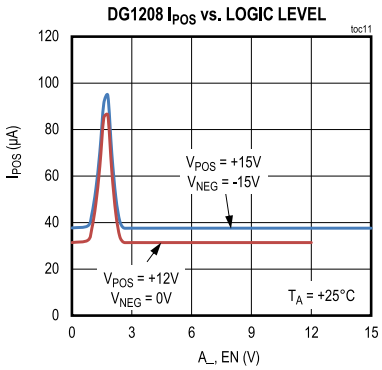

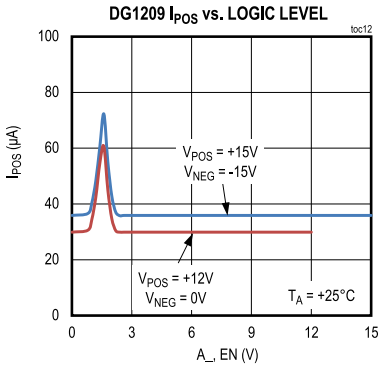

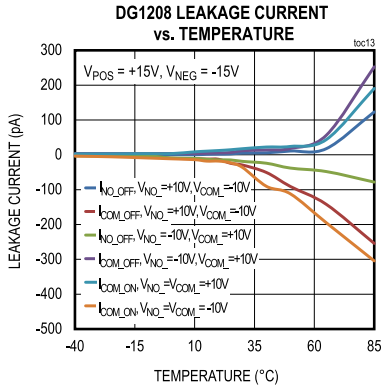

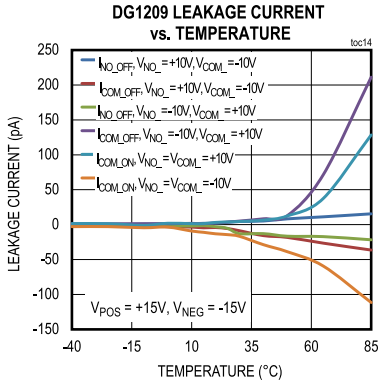

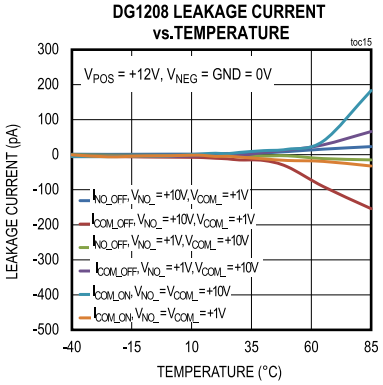

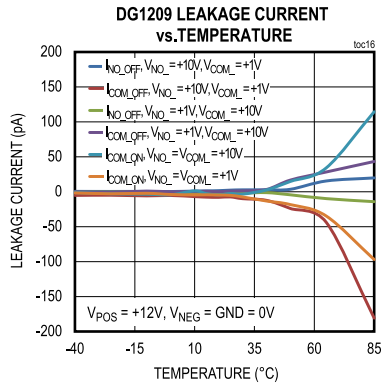

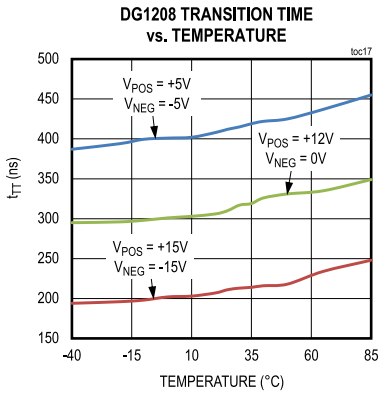

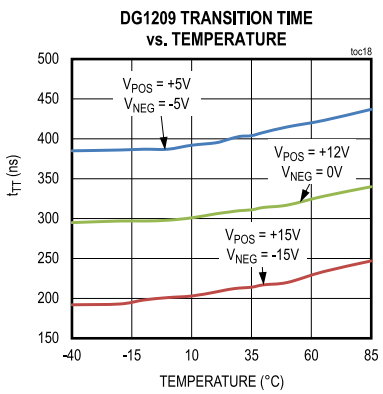

Typical Operating Characteristics (continued)

(T_A = 25°C, unless otherwise noted.)

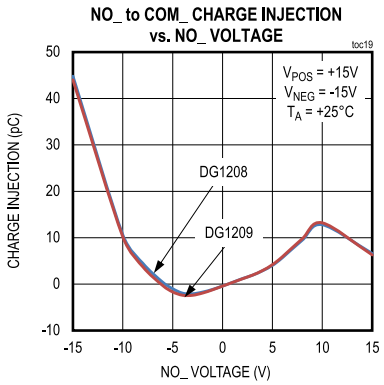

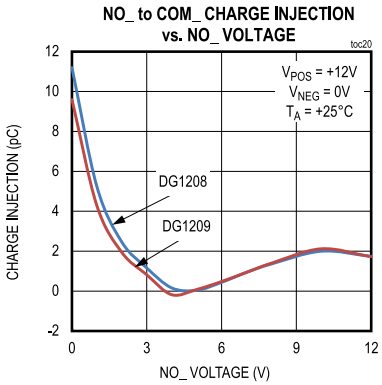

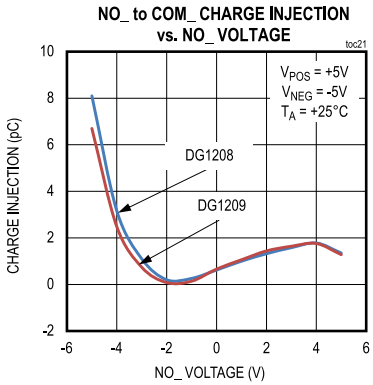

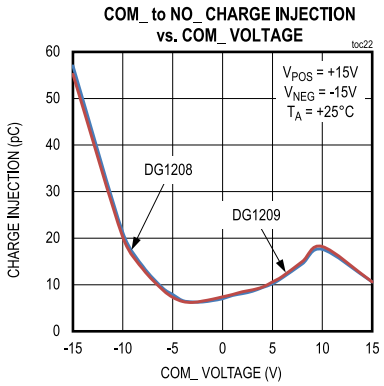

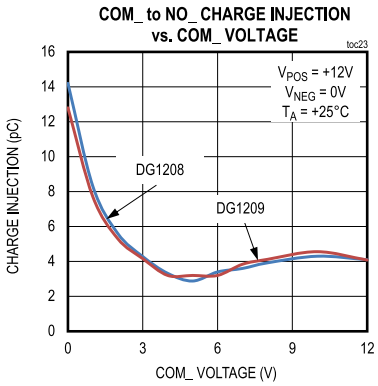

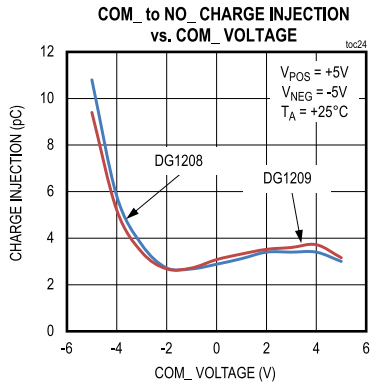

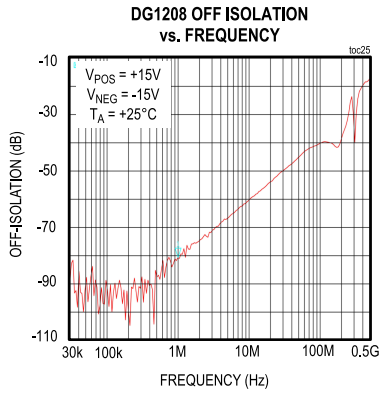

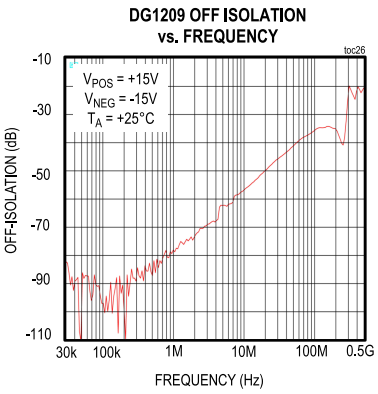

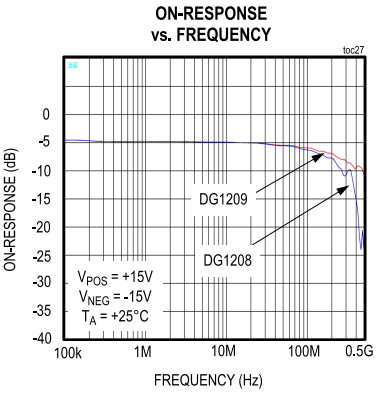

Typical Operating Characteristics (continued)

(T_A = 25°C, unless otherwise noted.)

DG1208 CROSSTALK vs. FREQUENCY

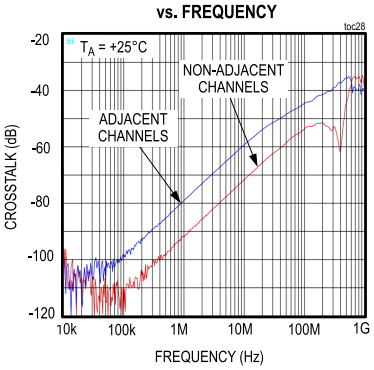

DG1209 CROSSTALK vs. FREQUENCY

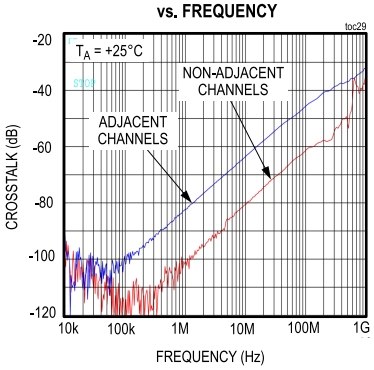

DG1208 THD + N vs. FREQUENCY

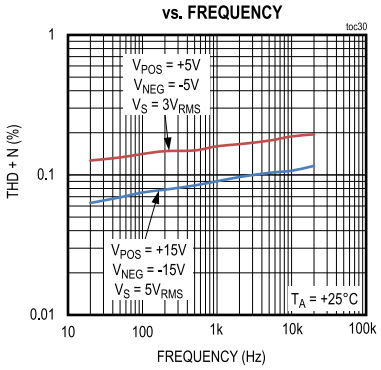

DG1209 THD + N vs. FREQUENCY

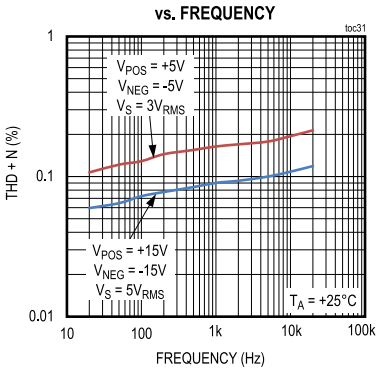

PSRR vs. FREQUENCY

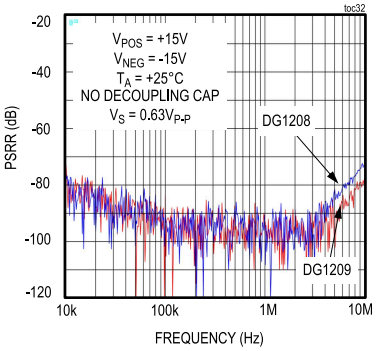

Pin Configurations

DG1208ETE+

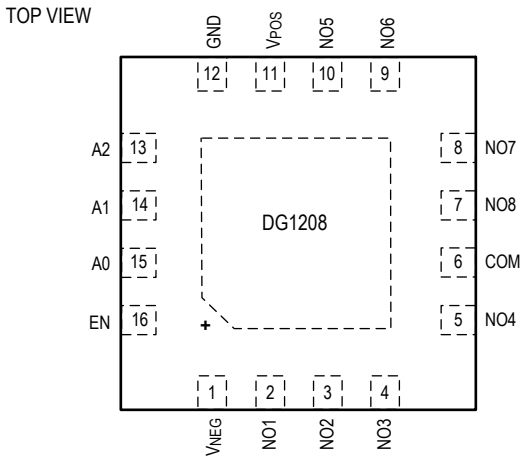

16 TQFN
4mm x 4mm

DG1208EUE+

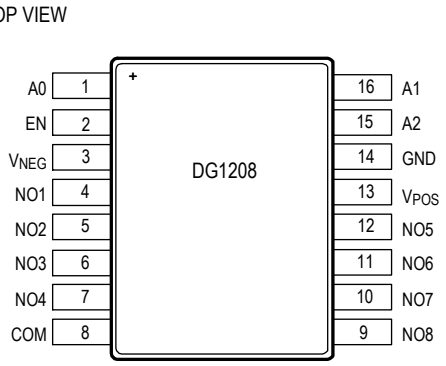

16 TSSOP

Pin Description

PIN		NAME	FUNCTION
DG1208ETE +	DG1208EUE +		
POWER SUPPLY			
11	13	V_{POS}	Positive Power Supply. Bypass V_{POS} to GND with a minimum 0.1µF ceramic capacitor as close to the pin as possible.
1	3	V_{NEG}	Negative Power Supply. Bypass V_{NEG} to GND with a minimum 0.1µF ceramic capacitor as close to the pin as possible. In single-supply applications, connect V_{NEG} to GND.
12	14	GND	Logic Ground Reference
EP	-	EP	Exposed Pad. Leave unconnected.
DIGITAL INPUTS			
13	15	A2	Logic Address Input. See the *Control Logic* section for more information.
14	16	A1	Logic Address Input. See the *Control Logic* section for more information.
15	1	A0	Logic Address Input. See the *Control Logic* section for more information.
16	2	EN	Enable Input. Drive EN high to enable the multiplexer. Drive EN low to disable all switches. Do not leave EN unconnected.
ANALOG SWITCH			
6	8	COM	Common Bidirectional Analog Signal Terminal. It can be either an input or output.
7	9	NO8	Normally-Open Bidirectional Analog Signal Terminal 8. It can be either an input or output.
8	10	NO7	Normally-Open Bidirectional Analog Signal Terminal 7. It can be either an input or output.
9	11	NO6	Normally-Open Bidirectional Analog Signal Terminal 6. It can be either an input or output.
10	12	NO5	Normally-Open Bidirectional Analog Signal Terminal 5. It can be either an input or output.
5	7	NO4	Normally-Open Bidirectional Analog Signal Terminal 4. It can be either an input or output.
4	6	NO3	Normally-Open Bidirectional Analog Signal Terminal 3. It can be either an input or output.
3	5	NO2	Normally-Open Bidirectional Analog Signal Terminal 2. It can be either an input or output.
2	4	NO1	Normally-Open Bidirectional Analog Signal Terminal 1. It can be either an input or output.

Pin Configurations

DG1209ETE+

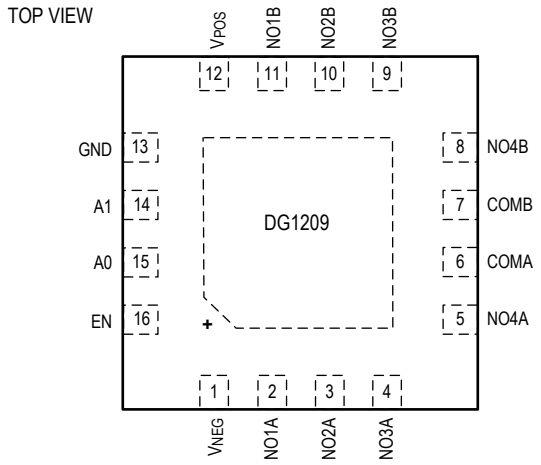

16 TQFN
4mm x 4mm

DG1209EUE+

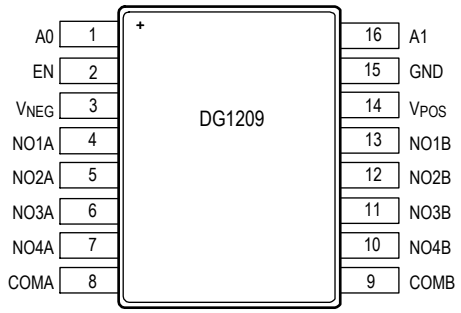

16 TSSOP

Pin Description

PIN		NAME	FUNCTION
DG1209ETE +	DG1209EUE +		
POWER SUPPLY			
12	14	V_{POS}	Positive Power Supply. Bypass V_{POS} to GND with a minimum 0.1µF ceramic capacitor as close to the pin as possible.
1	3	V_{NEG}	Negative Power Supply. Bypass V_{NEG} to GND with a minimum 0.1µF ceramic capacitor as close to the pin as possible. In single supply applications, connect V_{NEG} to GND.
13	15	GND	Logic Ground Reference
EP	-	EP	Exposed Pad. Leave unconnected.
DIGITAL INPUTS			
14	16	A1	Logic Address Input. See the *Control Logic* section for more information.
15	1	A0	Logic Address Input. See the *Control Logic* section for more information.
16	2	EN	Enable Input. Drive EN high to enable the multiplexer. Drive EN low to disable all switches. Do not leave EN unconnected.
ANALOG SWITCH			
7	9	COMB	B-Side Common Bidirectional Analog Signal Terminal. It can be either an input or output.
6	8	COMA	A-Side Common Bidirectional Analog Signal Terminal. It can be either an input or output.
8	10	NO4B	B-Side Normally-Open Bidirectional Analog Signal Terminal 4. It can be either an input or output.
9	11	NO3B	B-Side Normally-Open Bidirectional Analog Signal Terminal 3. It can be either an input or output.
10	12	NO2B	B-Side Normally-Open Bidirectional Analog Signal Terminal 2. It can be either an input or output.
11	13	NO1B	B-Side Normally-Open Bidirectional Analog Signal Terminal 1. It can be either an input or output.
5	7	NO4A	A-Side Normally-Open Bidirectional Analog Signal Terminal 4. It can be either an input or output.
4	6	NO3A	A-Side Normally-Open Bidirectional Analog Signal Terminal 3. It can be either an input or output.
3	5	NO2A	A-Side Normally-Open Bidirectional Analog Signal Terminal 2. It can be either an input or output.
2	4	NO1A	A-Side Normally-Open Bidirectional Analog Signal Terminal 1. It can be either an input or output.

Detailed Description

The DG1208/DG1209 are single 8-channel or dual 4-channel multiplexing switch devices with low leakage and low charge injection. The low capacitance and low charge injection of the DG1208/DG1209 make them ideal for automatic test equipment systems, data acquisition systems, sample-and-hold systems, and communication systems where low glitch and fast settling time are required.

The DG1208 is a single 8-channel multiplexer. It switches one of the 8 NO_ inputs to a common output COM, as determined by the three selection inputs A2, A1, and A0. The DG1209 is a dual 4-channel multiplexer. It switches a pair of differential NO_ inputs to differential outputs COMA and COMB, as determined by the two selection inputs A1 and A0. See the *Control Logic* section for more information.

The DG1208/DG1209 operate rail-to-rail and are fully specified for ±15V bipolar supplies or +12V single supply. The EN input on the DG1208/DG1209 is used to enable or disable the device. When EN is low, all channels are switched off. When EN is high, each channel conducts bidirectionally according to the selection inputs.

Control Logic

The DG1208 uses three selection inputs A2, A1, and A0 to determine the switching logic.

Table 1. DG1208 Control Logic

A2	A1	A0	EN	SWITCH ON
X	X	X	0	Switch Off
0	0	0	1	NO1
0	0	1	1	NO2
0	1	0	1	NO3
0	1	1	1	NO4
1	0	0	1	NO5
1	0	1	1	NO6
1	1	0	1	NO7
1	1	1	1	NO8

The DG1209 uses two selection inputs A1, and A0 to determine the switching logic.

Table 2. DG1209 Control Logic

A1	A0	EN	SWITCH ON
X	X	0	Switch Off
0	0	1	NO1A, NO1B
0	1	1	NO2A, NO2B
1	0	1	NO3A, NO3B
1	1	1	NO4A, NO4B

Typical Application Circuits

Data Acquisition System with DG1208 Using Bipolar Power Supplies

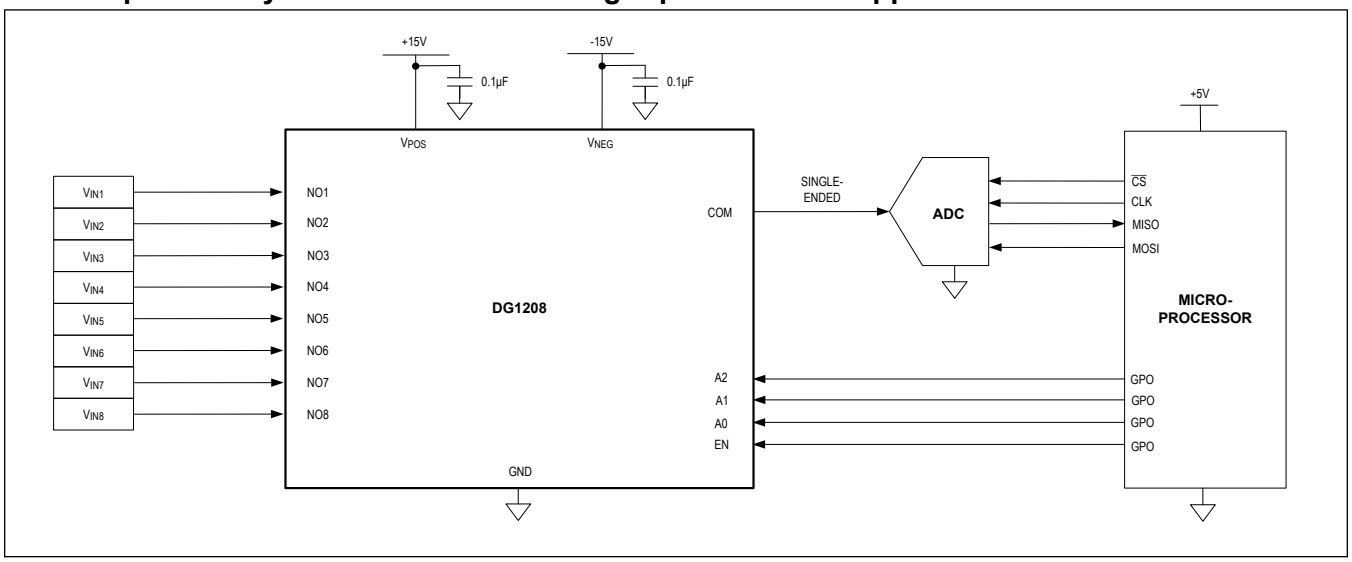

Data Acquisition System with DG1209 Using a Single Power Supply

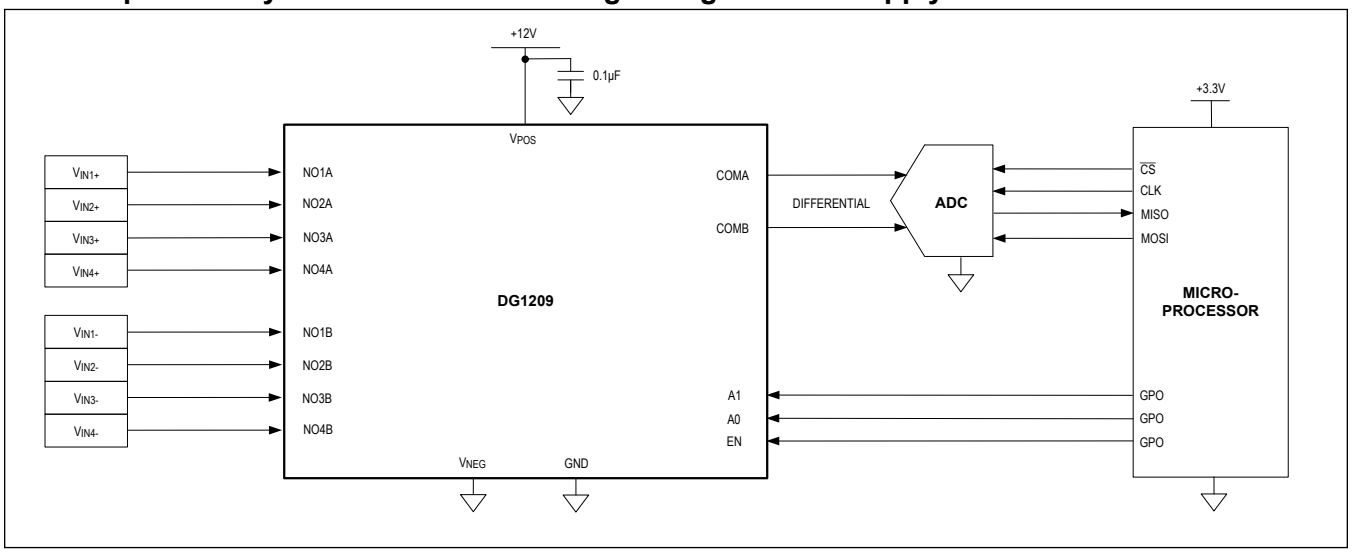

Ordering Information

PART NUMBER	PIN-PACKAGE	TEMPERATURE
DG1208ETE+	16 TQFN	-40°C to +85°C
DG1208ETE+T	16 TQFN	-40°C to +85°C
DG1208EUE+	16 TSSOP	-40°C to +85°C
DG1208EUE+T	16 TSSOP	-40°C to +85°C
DG1209ETE+	16 TQFN	-40°C to +85°C
DG1209ETE+T	16 TQFN	-40°C to +85°C
DG1209EUE+	16 TSSOP	-40°C to +85°C
DG1209EUE+T	16 TSSOP	-40°C to +85°C

+ Denotes a lead(Pb)-free/RoHS-compliant package.

Revision History

REVISION NUMBER	REVISION DATE	DESCRIPTION	PAGES CHANGED
0	11/20	Release for Market Intro	—
1	8/21	Removed future product asterisks from *Ordering Information* table	22

For pricing, delivery, and ordering information, please visit Maxim Integrated's online storefront at https://www.maximintegrated.com/en/storefront/storefront.html.

Maxim Integrated cannot assume responsibility for use of any circuitry other than circuitry entirely embodied in a Maxim Integrated product. No circuit patent licenses are implied. Maxim Integrated reserves the right to change the circuitry and specifications without notice at any time. The parametric values (min and max limits) shown in the Electrical Characteristics table are guaranteed. Other parametric values quoted in this data sheet are provided for guidance.

Maxim Integrated and the Maxim Integrated logo are trademarks of Maxim Integrated Products, Inc. © 2021 Maxim Integrated Products, Inc.

Looking for pricing, stock, or lifecycle information?

Click below to explore more details on WIN SOURCE:

- View DG1208EUE+ on WIN SOURCE
- Maxim Integrated Information

Optimize Your Supply Chain with WIN SOURCE Solutions

- Global Sourcing Solution
- Obsolete Management
- Cost Control Management
- Shortage Management
- Alternative Solution
- Excess Inventory Management