THE DATASHEET OF

SLG59M1714V

www.win-source.net 0086-755-83957316

A Reverse-current Blocking, 15 mΩ, 4 A Load Switch with Analog Current Monitor Output

General Description

Operating from a 2.5 V to 5.5 V power supply, the SLG59M1714V is a 15 mΩ, 4 A single-channel load switch with back-to-back reverse-current blocking when the load switch is disabled. With a fixed V_{OUT} slew rate of 2.8 V/ms, inrush current is internally limited. Incorporating two-stage current protection as well as thermal protection and fault signaling, the SLG59M1714V is designed for all 0.8 V to 5.5 V power rail applications. Fully specified over the -40 °C to 85 °C temperature range, the SLG59M1714V is packaged in a space-efficient, low thermal resistance 1.6 mm x 2.5 mm STQFN package.

Features

- Low RDS_{ON} nFET Block: 15 mΩ
- Back-to-back Reverse-current Blocking (when OFF)
- Maximum Continuous Switch Current: Up to 4 A
- Supply Voltage: 2.5 V ≤ V_{DD} ≤ 5.5 V
- Wide Input Voltage Range: 0.8 V ≤ V_{IN} ≤ V_{DD}
- Fixed V_{OUT} Slew Rate: 2.8 V/ms
- Two-stage Overcurrent Protection:
  - Resistor-adjustable Active Current Limit
  - Fixed 0.5 A Short-circuit Current Limit
- Thermal Shutdown Protection
- Analog MOSFET Current Monitor Output: 100 µA/A
- Open-drain $\overline{FAULT}$ Signaling
- Operating Temperature: -40 °C to 85 °C
- Low θ_{JA}, 16-pin 1.6 mm x 2.5 mm STQFN
  - Pb-Free / Halogen-Free / RoHS compliant

Pin Configuration

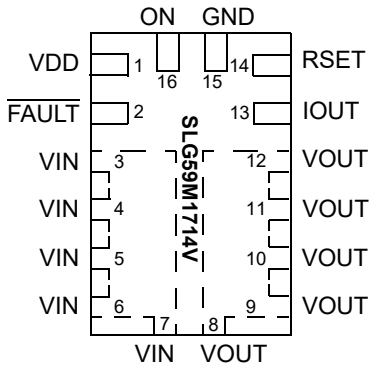

16-pin FC-STQFN
(Top View)

Applications

- Notebook Power Rail Switching
- Tablet Power Rail Switching
- Smartphone Power Rail Switching

Block Diagram

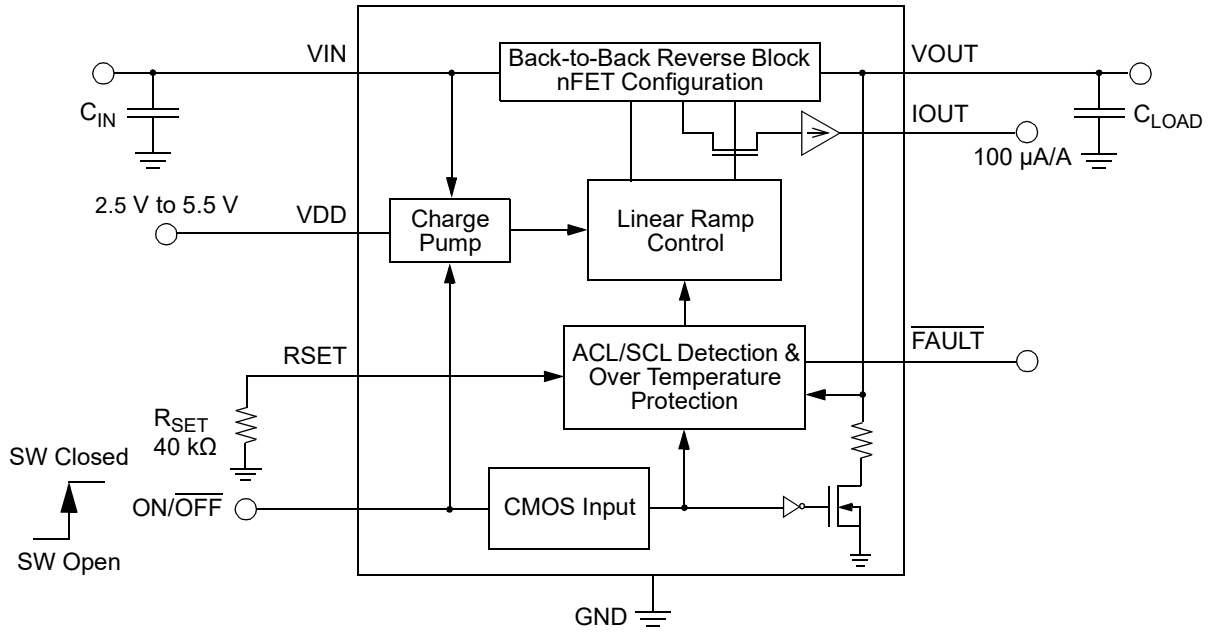

©2022 Renesas Electronics Corporation

Pin Description

Pin #	Pin Name	Type	Pin Description
1	VDD	Power	With an internal 1.9 V $V_{DD(UVLO)}$ threshold, VDD supplies the power for the operation of the load switch and internal control circuitry where its range is 2.5 V ≤ V_{DD} ≤ 5.5 V. Bypass the VDD pin to GND with a 0.1 µF (or larger) capacitor
2	$\overline{FAULT}$	Output	An open drain output, $\overline{FAULT}$ is asserted within 8ms when a current-limit or an over-temperature condition is detected. $\overline{FAULT}$ is deasserted within 8 ms when the fault condition is removed. Connect an external 10 kΩ resistor from the $\overline{FAULT}$ pin to local system logic supply.
3-7	VIN	MOSFET	Drain terminal of Power MOSFET (Pins 3-7 fused together). Connect a 10 µF (or larger) low ESR capacitor from this pin to GND. Capacitors used at VIN should be rated at 10 V or higher.
8-12	VOUT	MOSFET	Source terminal of Power MOSFET (Pins 8-12 fused together). Connect a low ESR capacitor (up to 200 µF) from this pin to GND. Capacitors used at VOUT should be rated at 10 V or higher.
13	IOUT	Output	MOSFET Load Current Monitor Output. As an analog current output, this signal when applied to a ground-reference resistor generates a voltage proportional to the current through the n-channel MOSFET. The IOUT transfer characteristic is typically 100 µA/A with a voltage compliance range of 0.5 V ≤ V_{IOUT} ≤ V_{DD} - 1 V. Optimal IOUT linearity is exhibited for 0.5 A ≤ I_{DS} ≤ 4 A. Bypass the IOUT pin to GND with a 0.01 µF capacitor.
14	RSET	Input	A 1%-tolerance, metal-film resistor between 13.3 kΩ and 80 kΩ sets the load switch's active current limit. A 13.3 kΩ resistor sets the SLG59M1714V's active current limit to 6 A and a 80 kΩ resistor sets the active current limit to 1 A.
15	GND	GND	Ground
16	ON	Input	A low-to-high transition on this pin closes the load switch. ON is an asserted-HIGH, level-sensitive CMOS input with ON_V_{IL} < 0.3 V and ON_V_{IH} > 0.85 V. While there is an internal pull down circuit to ground (~4 MΩ), connect this pin to the output of a general-purpose output (GPO) from a microcontroller or other application processor.

Ordering Information

Part Number	Type	Production Flow
SLG59M1714V	STQFN 16L	Industrial, -40 °C to 85 °C
SLG59M1714VTR	STQFN 16L (Tape and Reel)	Industrial, -40 °C to 85 °C

©2022 Renesas Electronics Corporation

Absolute Maximum Ratings

Parameter	Description	Conditions	Min.	Typ.	Max.	Unit
V_{DD}	Power Supply Pin Voltage to GND		--	--	7	V
V_{IN} to GND	Load Switch Input Voltage to GND		-0.3	--	7	V
V_{OUT} to GND	Load Switch Output Voltage to GND		-0.3	--	7	V
ON, RSET, IOUT, and $\overline{FAULT}$ to GND	ON, RSET, IOUT, and $\overline{FAULT}$ Pin Voltages to GND		-0.3	--	7	V
T_S	Storage Temperature		-65	--	150	°C
ESD_{HBM}	ESD Protection	Human Body Model	2000	--	--	V
ESD_{CDM}	ESD Protection	Charged Device Model	500	--	--	V
MSL	Moisture Sensitivity Level		1			
θ_{JA}	Package Thermal Resistance, Junction-to-Ambient	1.6mm x 2.5mm STQFN; Determined using 1 in^2, 1.2 oz. copper pads under each VIN and VOUT on FR4 pcb material	--	35	--	°C/W
W_{DIS}	Package Power Dissipation		--	--	1.2	W
MOSFET IDS_{CONT}	Continuous Current from VIN to VOUT		--	--	4	A
MOSFET IDS_{PK}	Peak Current from VIN to VOUT	Maximum pulsed switch current, pulse width < 1 ms, 1% duty cycle	--	--	6	A

Note: Stresses greater than those listed under "Absolute Maximum Ratings" may cause permanent damage to the device. This is a stress rating only and functional operation of the device at these or any other conditions above those indicated in the operational sections of this specification is not implied. Exposure to absolute maximum rating conditions for extended periods may affect reliability.

Electrical Characteristics

T_A = -40 °C to 85 °C (unless otherwise stated). Typical values are at T_A = 25 °C

Parameter	Description	Conditions	Min.	Typ.	Max.	Unit
V_{DD}	Power Supply Voltage		2.5	--	5.5	V
$V_{DD(UVLO)}$	V_{DD} Undervoltage Lockout Threshold	V_{DD} ↑	1.6	1.9	2.2	V
		V_{DD} ↓	1.5	1.8	2.2	V
I_{DD}	Power Supply Current, when OFF	$V_{DD} = V_{IN}$ = 5.5 V; ON = 0 V	--	0.5	1	µA
	Power Supply Current, when ON	$V_{DD} = V_{IN}$ = 5.5 V; ON = 5.5 V, No load, R_{SET} = 80 kΩ	--	150	200	µA
RDS_{ON}	ON Resistance	$V_{DD} = V_{IN}$ = 5 V; T_A = 25 °C; I_{DS} = 100 mA	--	15	20	mΩ
		$V_{DD} = V_{IN}$ = 5 V; T_A = 85 °C; I_{DS} = 100 mA	--	18	24	mΩ
MOSFET IDS	Current from VIN to VOUT	Continuous	--	--	4	A
I_{FET_OFF}	MOSFET OFF Leakage Current	$V_{DD} = V_{IN}$ = 5.5 V; V_{OUT} = 0 V; ON = 0 V	--	0.5	2	µA
$I_{REVERSE}$	MOSFET Reverse-Leakage Current	V_{IN} = 0 V; V_{OUT} = 5 V; V_{DD} = 0 V; ON = 0 V	--	--	2	µA
I_{OUT}	MOSFET Load Current Monitor Output	0.5 V ≤ V_{IOUT} ≤ V_{DD} – 1 V; $V_{DD} = V_{IN}$ = 5 V; I_{DS} = 1 A	80	100	120	µA

©2022 Renesas Electronics Corporation

Electrical Characteristics (continued)

T_A = -40 °C to 85 °C (unless otherwise stated). Typical values are at T_A = 25 °C

Parameter	Description	Conditions	Min.	Typ.	Max.	Unit
V_{IN}	Drain Voltage		0.8	--	V_{DD}	V
T_{ON_Delay}	ON Delay Time	50% ON to V_{OUT} Ramp Start , V_{DD} = V_{IN} = 5 V; R_{LOAD} = 20 Ω, C_{LOAD} = 10 µF	--	270	500	µs
$V_{OUT(SR)}$	V_{OUT} Slew Rate	10% V_{OUT} to 90% V_{OUT} ↑; V_{DD} = V_{IN} = 5 V; R_{LOAD} = 20 Ω, C_{LOAD} = 10 µF	2.24	2.8	4	V/ms
T_{Total_ON}	Total Turn On Time	50% ON to 90% V_{OUT} ↑; V_{DD} = V_{IN} = 5 V, R_{LOAD} = 20 Ω, C_{LOAD} = 10 µF	1.44	1.8	2.16	ms
T_{OFF_Delay}	OFF Delay Time	50% ON to V_{OUT} Fall Start, V_{DD} = V_{IN} = 5 V, R_{LOAD} = 20 Ω, no C_{LOAD}	--	11	15	µs
C_{LOAD}	Output Load Capacitance	C_{LOAD} connected from VOUT to GND	1	10	200	µF
I_{LIMIT}	Active Current Limit, I_{ACL}	V_{OUT} > 0.25 V; R_{SET} = 40 kΩ	1.5	2	2.5	A
	Short-circuit Current Limit, I_{SCL}	V_{OUT} < 0.25 V	--	0.5	--	A
$T\overline{FAULT}_{LOW}$	FAULT Assertion Time	Abnormal Step Load Current event to Fault↓	5	8	12	ms
$T\overline{FAULT}_{HIGH}$	FAULT De-assertion Time	Delay to $\overline{FAULT}$↑ after fault condition is removed	5	8	12	ms
$\overline{FAULT}_{VOL}$	$\overline{FAULT}$ Output Low Voltage	$I_{\overline{FAULT}}$ = 1 mA	--	0.2	--	V
ON_V_{IH}	High Input Voltage on ON pin		0.85	--	V_{DD}	V
ON_V_{IL}	Low Input Voltage on ON pin		-0.3	0	0.3	V
$R_{DISCHRG}$	Output Discharge Resistance	V_{DD} = V_{IN} = 5 V	168	210	252	Ω
$THERM_{ON}$	Thermal shutoff turn-on temperature	V_{DD} = V_{IN} = 5 V	112.5	125	--	°C
$THERM_{OFF}$	Thermal shutoff turn-off temperature	V_{DD} = V_{IN} = 5 V	90	100	--	°C

©2022 Renesas Electronics Corporation

T_{Total_ON}, T_{ON_Delay} and Rise Time Measurement

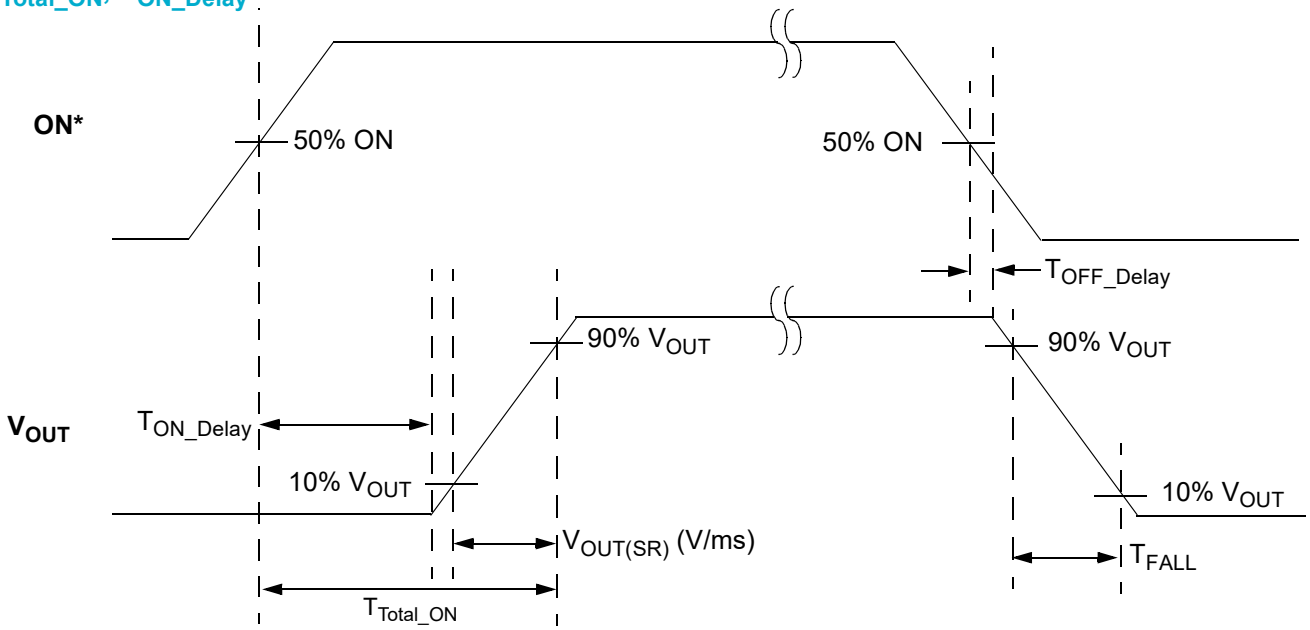

*Rise and Fall Times of the ON Signal are 100 ns

©2022 Renesas Electronics Corporation

Typical Performance Characteristics

RDS_{ON} vs. V_{DD} and Temperature

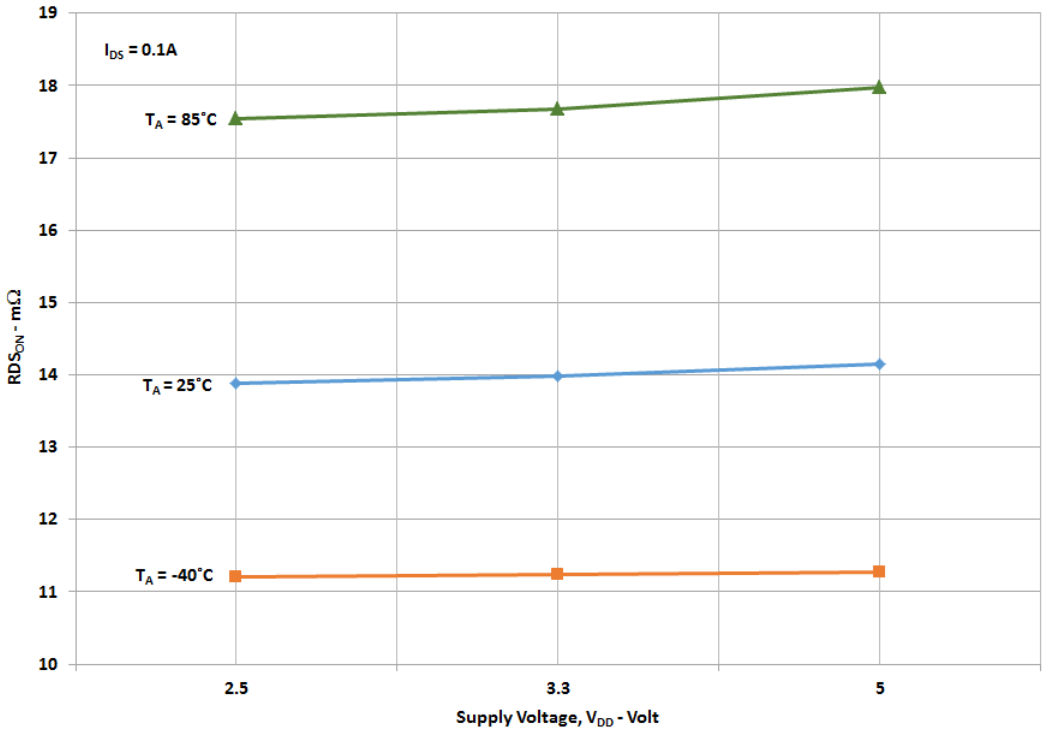

RDS_{ON} vs. V_{IN} and V_{DD}

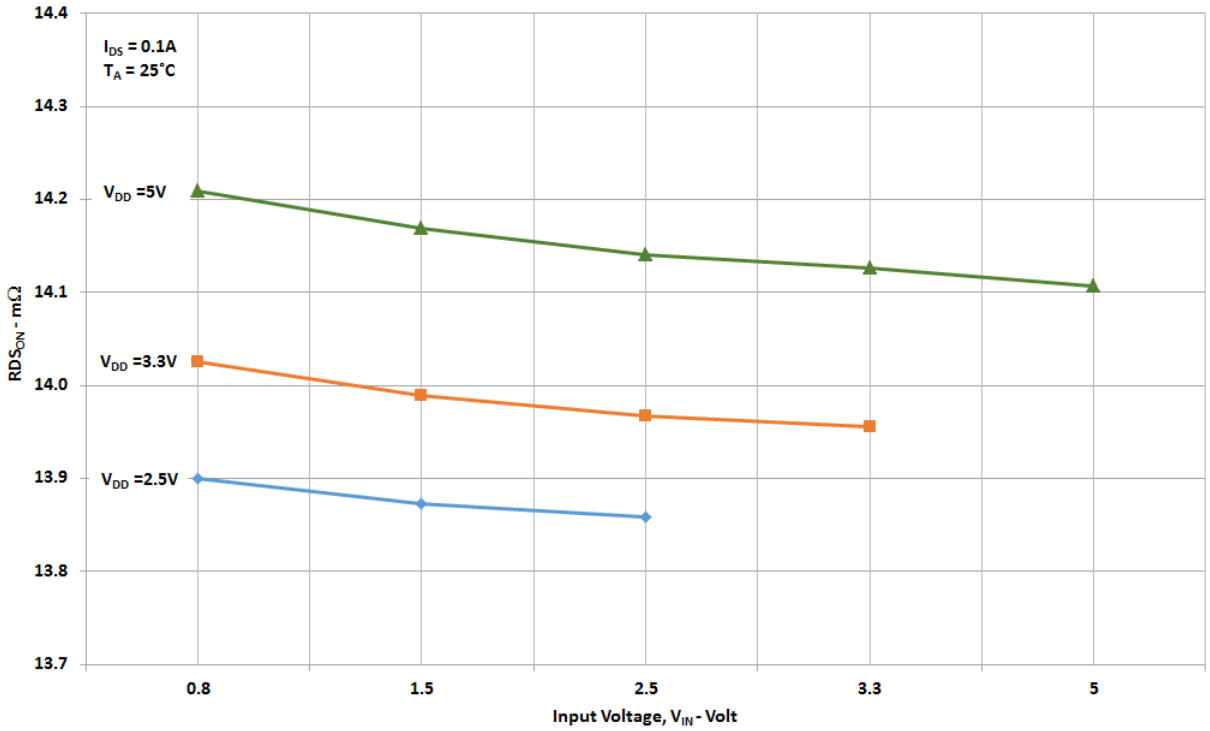

©2022 Renesas Electronics Corporation

I_{ACL} vs. Temperature, R_{SET}, V_{DD}, and V_{IN}

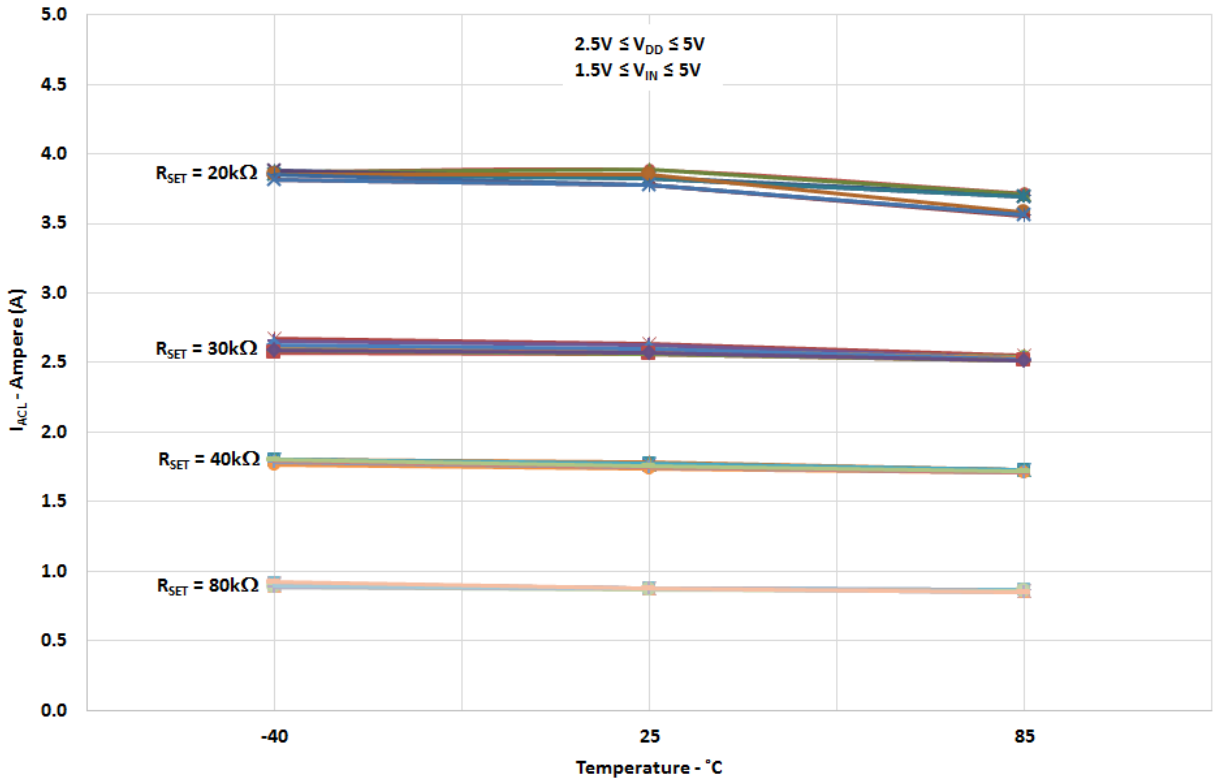

I_{ACL} vs. R_{SET}, V_{DD}, and V_{IN}

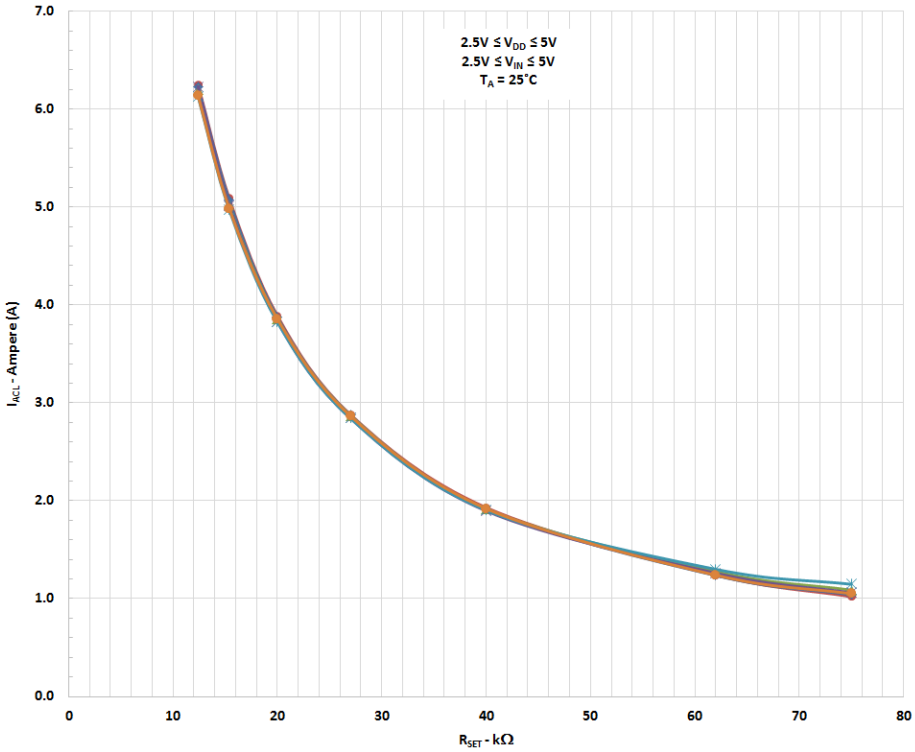

©2022 Renesas Electronics Corporation

V_{OUT} Slew Rate vs. Temperature, V_{DD}, and V_{IN}

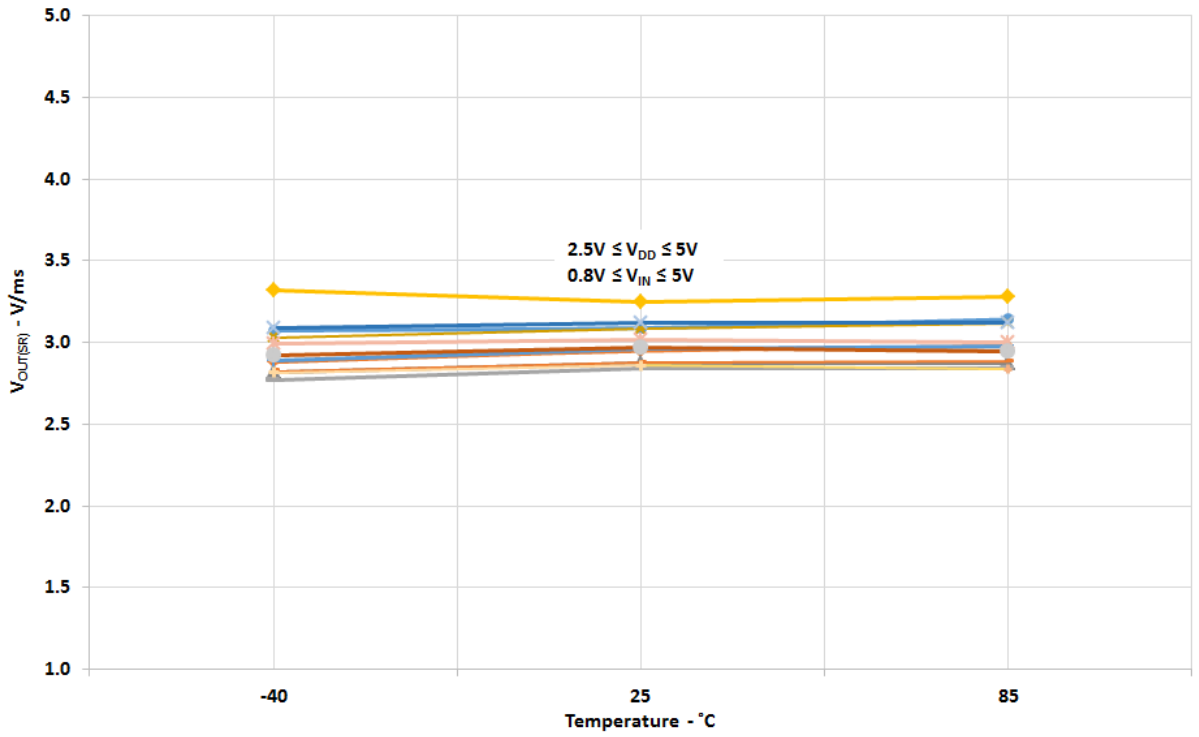

T_{Total_ON} vs. Temperature, V_{DD}, and V_{IN}

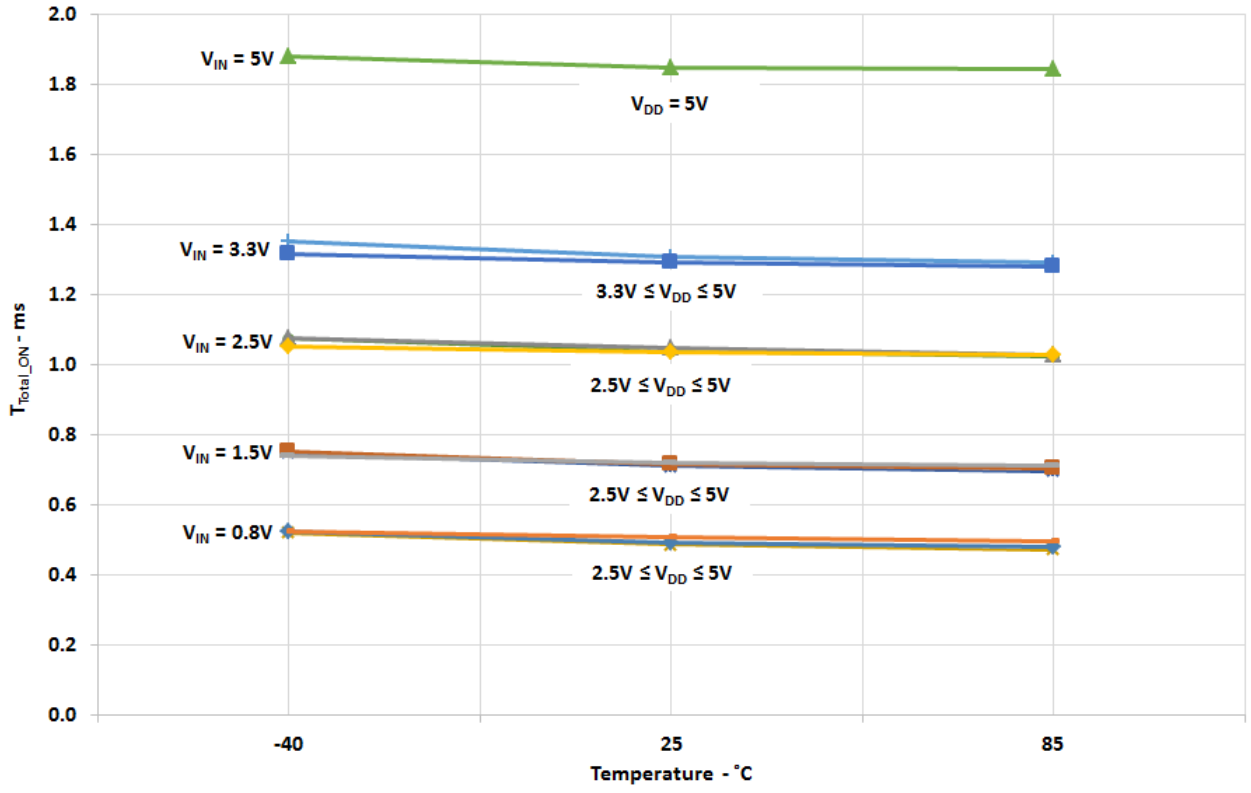

©2022 Renesas Electronics Corporation

Timing Diagram - Basic Operation including Active Current Limit Protection

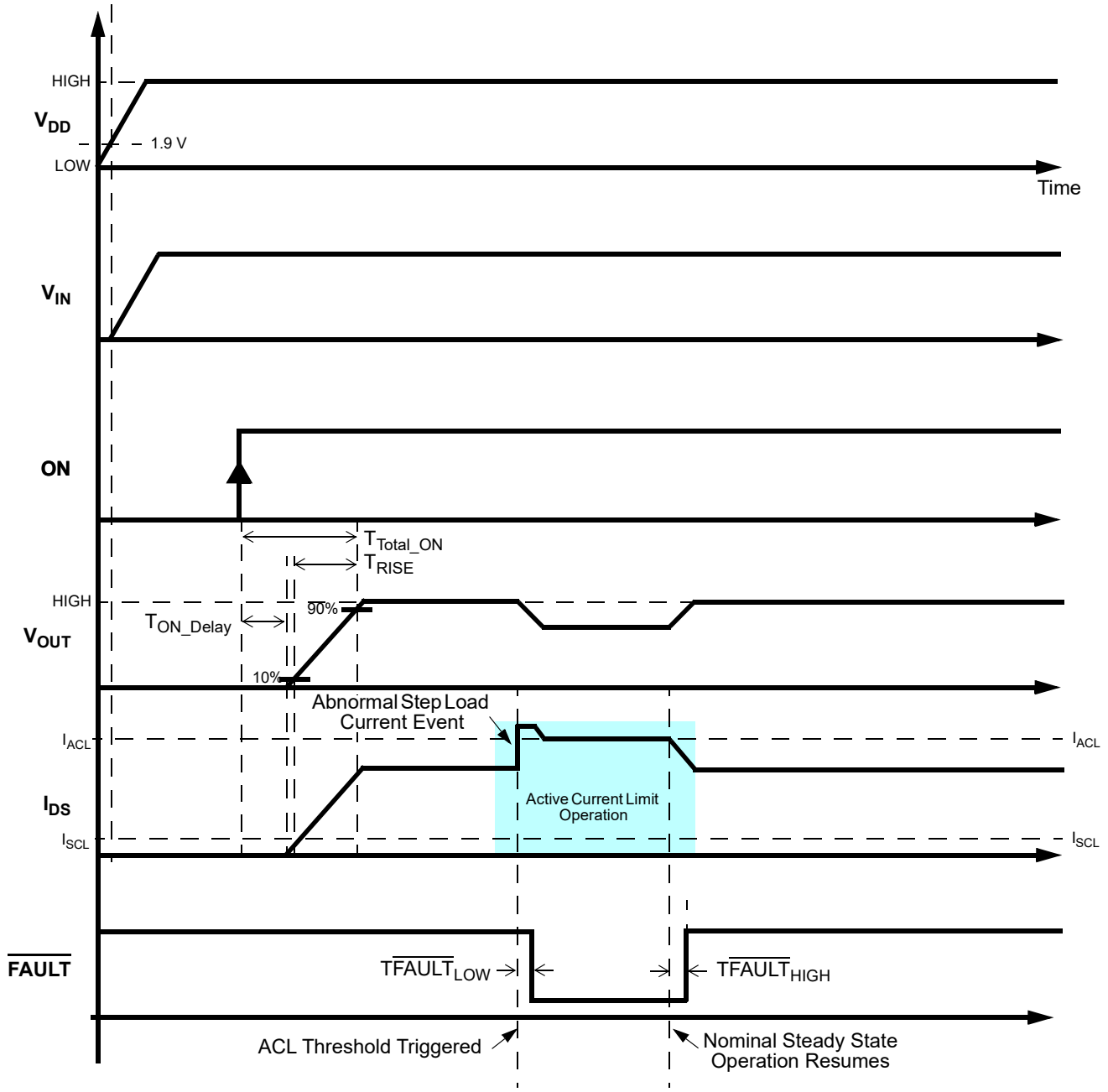

©2022 Renesas Electronics Corporation

Timing Diagram - Active Current Limit & Thermal Protection Operation

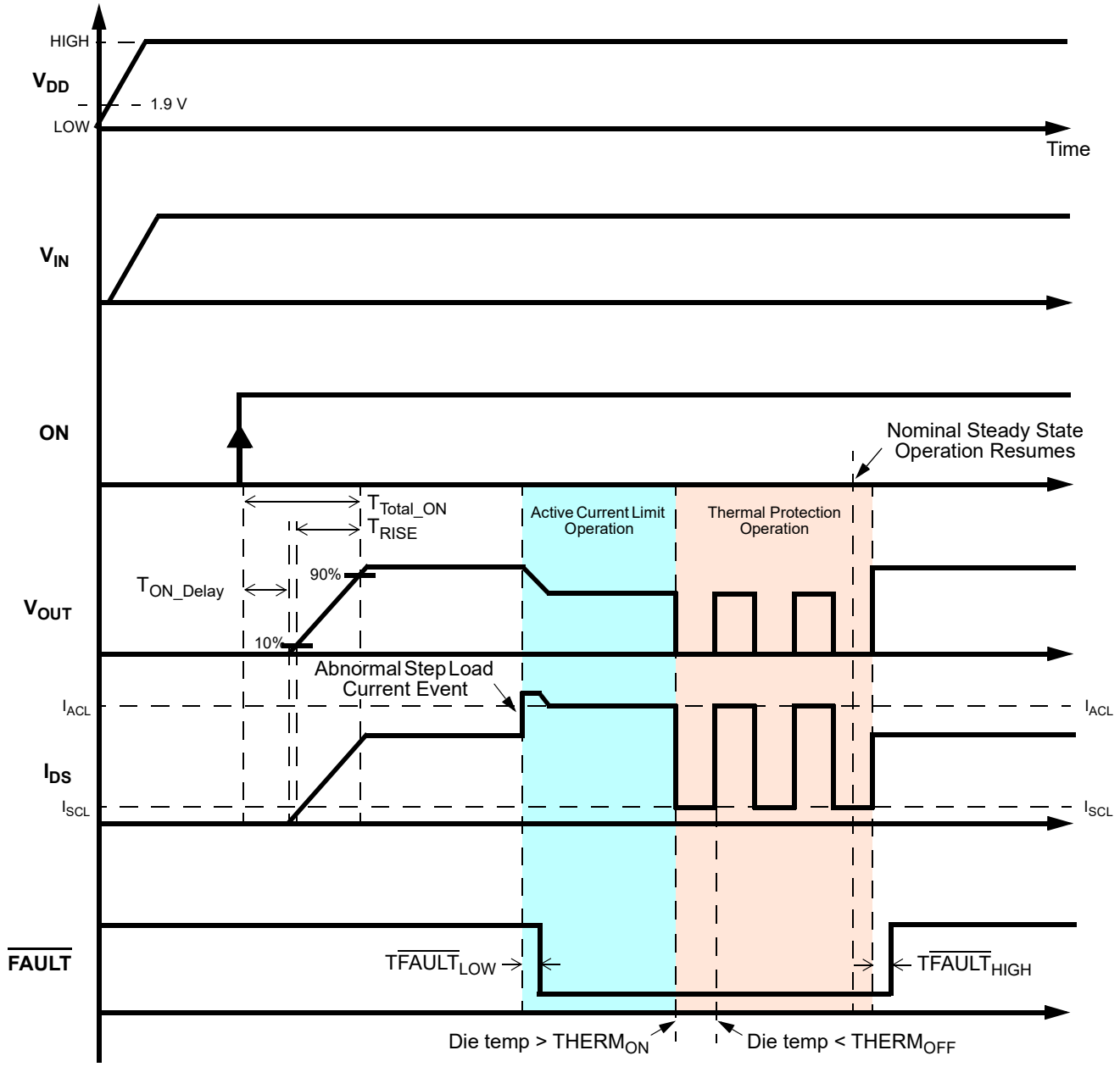

©2022 Renesas Electronics Corporation

SLG59M1714V Power-Up/Power-Down Sequence Considerations

To ensure glitch-free power-up under all conditions, apply V_{DD} first, followed by V_{IN} after V_{DD} exceeds 1.9 V. Then allow V_{IN} to reach 90% of its max value before toggling the ON pin from Low-to-High. Likewise, power-down in reverse order.

If V_{DD} and V_{IN} need to be powered up simultaneously, glitching can be minimized by having a suitable load capacitor. A 10 µF C_{LOAD} will prevent glitches for rise times of V_{DD} and V_{IN} higher than 2 ms.

If the ON pin is toggled HIGH before V_{DD} and V_{IN} have reached their steady-state values, the load switch timing parameters may differ from datasheet specifications.

SLG59M1714V Current Limiting Operation

The SLG59M1714V has two types of current limiting triggered by the output V_{OUT} voltage.

1. Standard Current Limiting Mode (with Thermal Shutdown Protection)

When the V_{OUT} voltage > 250 mV, the output current is initially limited to the Active Current Limit (I_{ACL}) specification listed in the Electrical Characteristics table. The ACL monitor's response time is very fast and is triggered within a few microseconds to sudden (transient) changes in load current. When a load current overload is detected, the ACL monitor increases the FET resistance to keep the current from exceeding the load switch's I_{ACL} threshold. During active current-limit operation, V_{OUT} is also reduced by I_{ACL} x $RDS_{ON(ACL)}$. This observed behavior is illustrated in the timing diagrams on Pages 9 and 10.

When a current-limit event is detected, the $\overline{FAULT}$ signal becomes asserted in approximately $T\overline{FAULT}_{LOW}$ and the SLG59M1714V operates in constant current mode with the output current set by R_{SET} (see R_{SET}-Current Limit Table). The SLG59M1714V continues to operate in constant current mode indefinitely until a) the current-limit event has elapsed or b) the SLG59M1714V's internal thermal shutdown threshold is reached. When a current-limit event has elapsed or been removed, its $\overline{FAULT}$ signal will be deasserted after approximately $T\overline{FAULT}_{HIGH}$.

Once thermal shutdown has been triggered, the IC's $\overline{FAULT}$ signal will remain asserted. As the die cools, the MOSFET will be turned back on when the die temperature falls to ~100°C; in this case, the $\overline{FAULT}$ signal will be deasserted in approximately $T\overline{FAULT}_{HIGH}$. If the current-limiting condition has not elapsed or been removed, die temperature will increase and the SLG59M1714V's thermal shutdown operation will repeat indefinitely.

2. Short Circuit Current Limiting Mode (with Thermal Shutdown Protection)

The SLG59M1714V's short-circuit current-limit monitor includes two operating modes depending upon the state of the IC's ON pin:

a) Before ON low-to-high transition

When the V_{OUT} voltage < 0.25 V (which is the case with a hard short, such as a solder bridge on the power rail), the load switch's internal Short-circuit Current Limit (SCL) monitor limits the FET current to approximately 500 mA (the I_{SCL} threshold). The SLG59M1714V's short-circuit current limit (SCL) protection scheme is disabled automatically once V_{OUT} rises above 0.3 V. While the internal Thermal Shutdown Protection circuit remains enabled and since the I_{SCL} threshold is much lower than the I_{ACL} threshold, thermal shutdown protection may become activated only at higher ambient temperatures.

b) After ON low-to-high transition

If a short-circuit or a very large load current transient occurs after an ON low-to-high transition, the SLG59M1714V's internal SCL circuit will be triggered if V_{OUT} falls by 0.4 V. The response time of this fast turn-off detection is ~1 µs.

SLG59M1714V $\overline{FAULT}$ Operation

As previously stated in the Pin Description section, the open-drain $\overline{FAULT}$ output is asserted when an active-current limit (ACL) or thermal shutdown fault condition is detected. This output becomes asserted in $T\overline{FAULT}_{LOW}$ upon the detection of a fault condition and becomes deasserted $T\overline{FAULT}_{HIGH}$ once the fault condition is removed. If the ON pin is toggled HIGH-to-LOW while the $\overline{FAULT}$ output is low, the $\overline{FAULT}$ output is deasserted without delay.

©2022 Renesas Electronics Corporation

SLG59M1714V Reverse-blocking Operation

The SLG59M1714V's back-to-back FET configuration effectively blocks any reverse-current flow from VOUT to VIN when V_{DD} = 0 V and switch OFF (ON = LOW). In this condition, leakage current from VOUT to VIN is less than $I_{REVERSE}$. In the event V_{DD} is active with ON = LOW, the SLG59M1714V's VOUT discharge circuit would be active; hence, there would also be a current path from VOUT to GND.

Setting the SLG59M1714V Output Current Limit with R_{SET}

The current-limit operation of the SLG59M1714V begins by choosing the appropriate ±1%-tolerance R_{SET} value for the application. The recommended range for R_{SET} is:

$$13.3\ k\Omega \le R_{SET} \le 80\ k\Omega$$

which corresponds to an output constant current limit in the following range:

$$1\ A \le I_{ACL} \le 6\ A$$

Table 1: Setting Current Limit Threshold vs. R_{SET}

Constant Current Limit (A)	R_{SET} (kΩ)
1	80
2	40
4	20
6	13.3

Power Dissipation

The junction temperature of the SLG59M1714V depends on different factors such as board layout, ambient temperature, and other environmental factors. The primary contributor to the increase in the junction temperature of the SLG59M1714V is the power dissipation of its power MOSFET. Its power dissipation and the junction temperature in nominal operating mode can be calculated using the following equations:

$$PD = RDS_{ON} \times I_{DS}^2$$

where:
PD = Power dissipation, in Watts (W)
RDS_{ON} = Power MOSFET ON resistance, in Ohms (Ω)
I_{DS} = Output current, in Amps (A)

and

$$T_J = PD \times \theta_{JA} + T_A$$

where:
T_J = Junction temperature, in Celsius degrees (°C)
θ_{JA} = Package thermal resistance, in Celsius degrees per Watt (°C/W)
T_A = Ambient temperature, in Celsius degrees (°C)

©2022 Renesas Electronics Corporation

Power Dissipation (continued)

During active current-limit operation, the SLG59M1714V's power dissipation can be calculated by taking into account the voltage drop across the load switch (V_{IN} - V_{OUT}) and the magnitude of the output current in active current-limit operation (I_{ACL}):

$$PD = (V_{IN} - V_{OUT}) \times I_{ACL} \text{ or}$$

$$PD = (V_{IN} – (R_{LOAD} \times I_{ACL})) \times I_{ACL}$$

where:

PD = Power dissipation, in Watts (W)
V_{IN} = Input Voltage, in Volts (V)
R_{LOAD} = Load Resistance, in Ohms (Ω)
I_{ACL} = Output limited current, in Amps (A)
$V_{OUT} = R_{LOAD} \times I_{ACL}$

For more information on GreenFET load switch features, please visit our website and see App Note "AN-1068 GreenFET and High Voltage GreenFET Load Switch Basics".

 ©2022 Renesas Electronics Corporation

Layout Guidelines:

1. The VDD pin needs a 0.1 µF (or larger) external capacitor to smooth pulses from the power supply. Locate this capacitor as close as possible to the SLG59M1714V's pin 1.

2. Since the VIN and VOUT pins dissipate most of the heat generated during high-load current operation, it is highly recommended to make power traces as short, direct, and wide as possible. A good practice is to make power traces with an absolute minimum widths of 15 mils (0.381 mm) per Ampere. A representative layout, shown in Figure 1, illustrates proper techniques for heat to transfer as efficiently as possible out of the device;

3. To minimize the effects of parasitic trace inductance on normal operation, it is recommended to connect input C_{IN} and output C_{LOAD} low-ESR capacitors as close as possible to the SLG59M1714V's VIN and VOUT pins;

4. The GND pin should be connected to system analog or power ground plane.

5. 2 oz. copper is recommended for high current operation.

SLG59M1714V Evaluation Board:

A GreenFET Evaluation Board for SLG59M1714V is designed according to the statements above and is illustrated on Figure 1. Please note that evaluation board has D_Sense and S_Sense pads. They cannot carry high currents and dedicated only for RDS_{ON} evaluation.

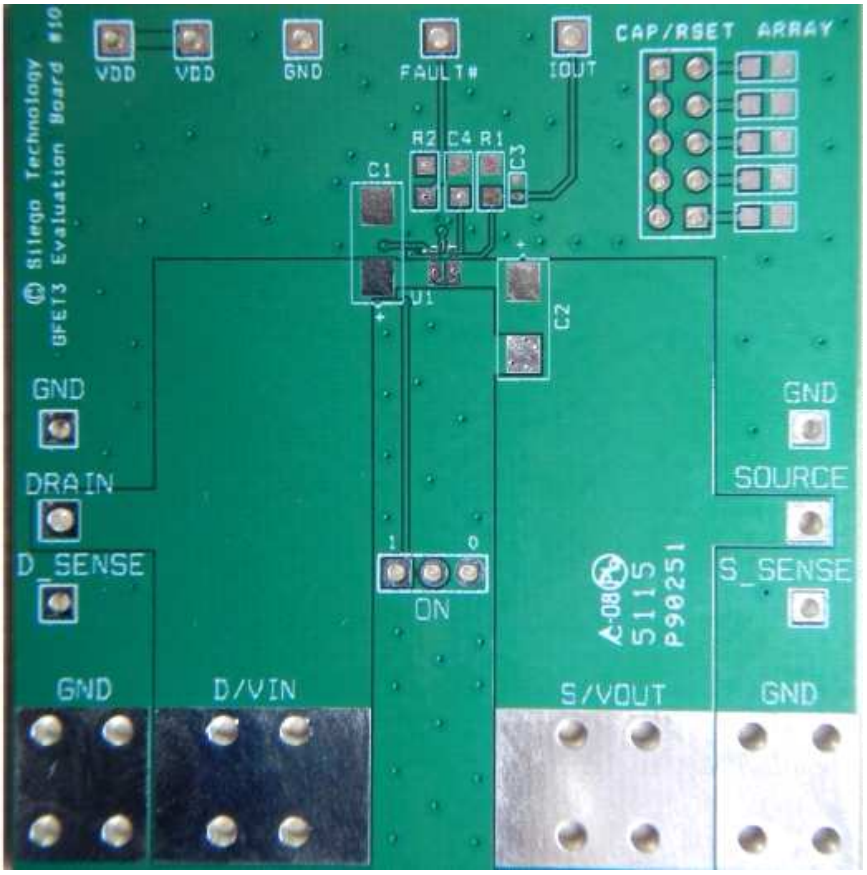

Figure 1. SLG59M1714V Evaluation Board

©2022 Renesas Electronics Corporation

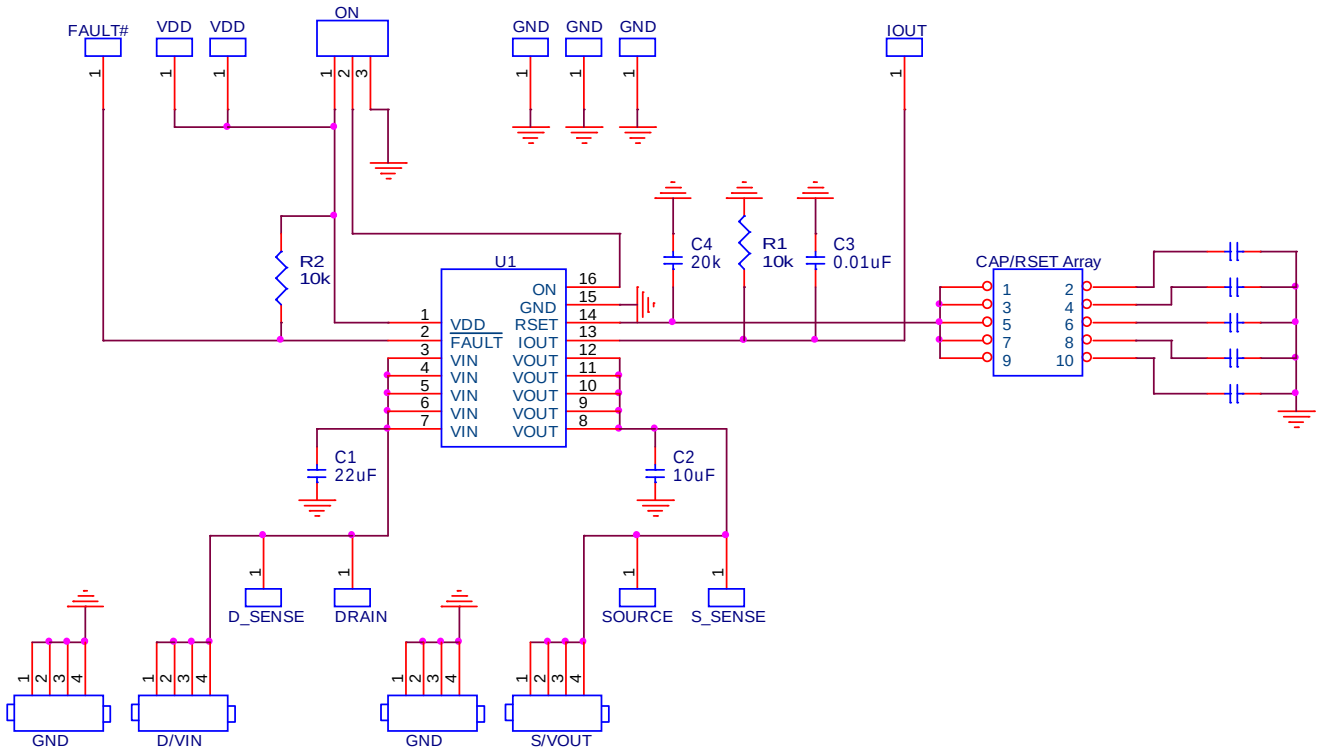

Figure 2. SLG59M1714V Evaluation Board Connection Circuit

Basic Test Setup and Connections

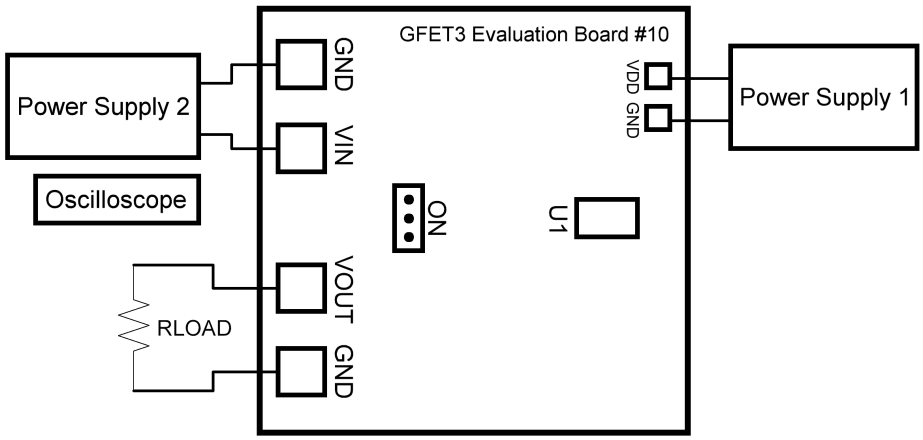

Figure 3. SLG59M1714V Evaluation Board Connection Circuit

EVB Configuration

1. Connect oscilloscope probes to D/VIN, S/VOUT, ON, etc.;

2. Turn on Power Supply 1 and set desired V_{DD} from 2.5 V…5.5 V range;

3. Turn on Power Supply 2 and set desired V_{IN} from 0.8 V…V_{DD} range;

4 .Toggle the ON signal High or Low to observe SLG59M1714V operation.

©2022 Renesas Electronics Corporation

Package Top Marking System Definition

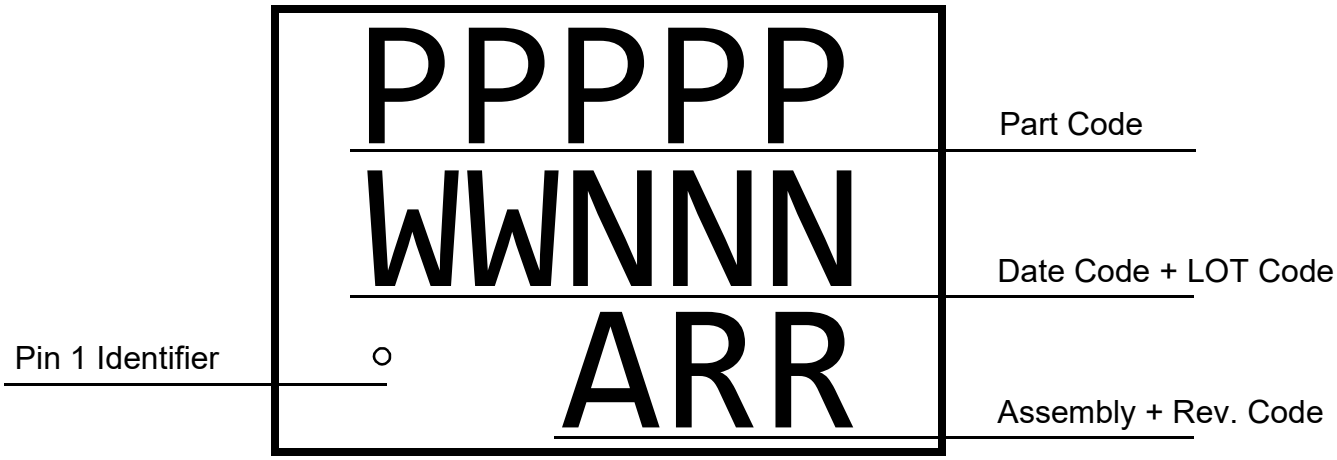

PPPPP - Part ID Field
WW - Date Code Field[1]
NNN - Lot Traceability Code Field[1]
A - Assembly Site Code Field [2]
RR - Part Revision Code Field[2]

Note 1: Each character in code field can be alphanumeric A-Z and 0-9
Note 2: Character in code field can be alphabetic A-Z

©2022 Renesas Electronics Corporation

Package Drawing and Dimensions

16 Lead STQFN Package 1.6 mm x 2.5 mm (Fused Lead)

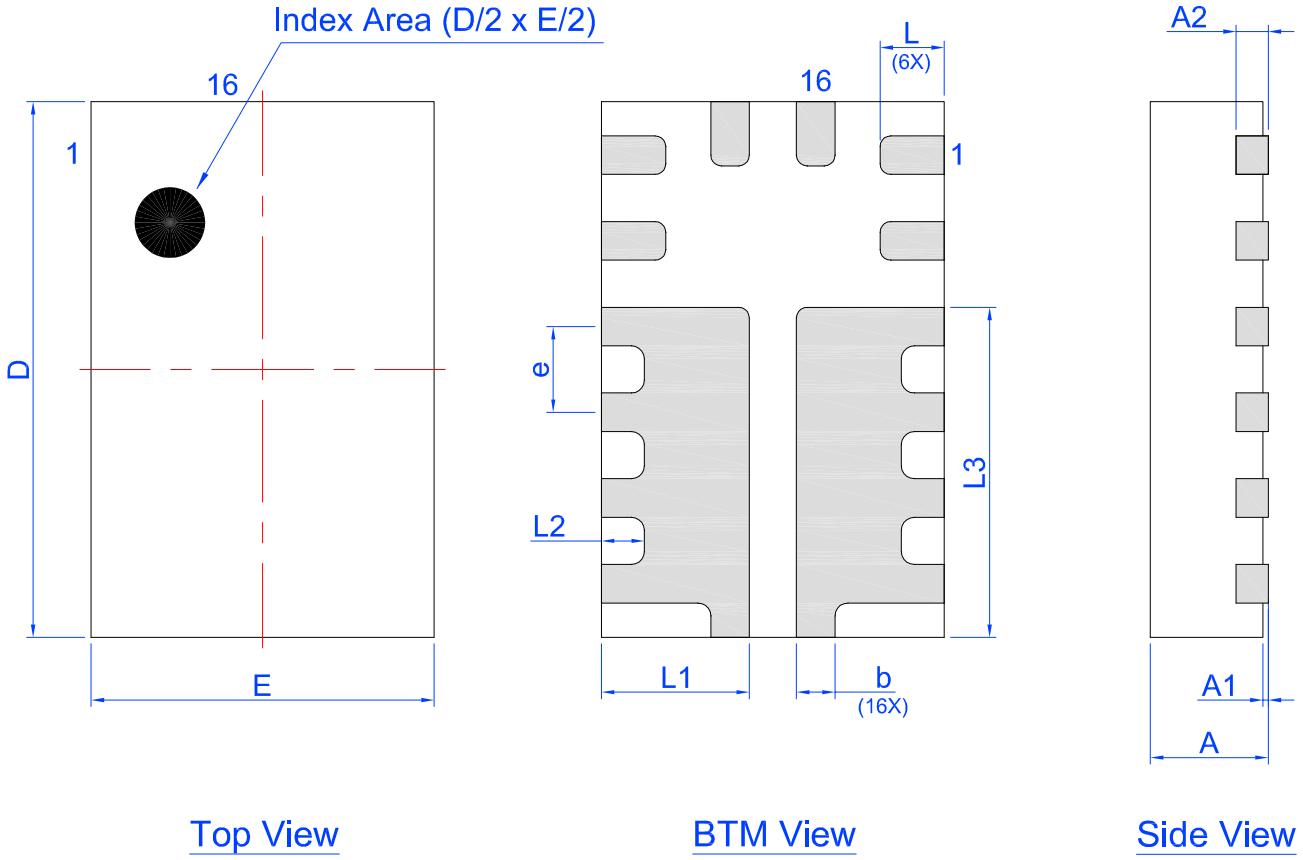

Unit: mm

Symbol	Min	Nom.	Max	Symbol	Min	Nom.	Max
A	0.50	0.55	0.60	D	2.45	2.50	2.55
A1	0.005	-	0.05	E	1.55	1.60	1.65
A2	0.10	0.15	0.20	L	0.25	0.30	0.35
b	0.13	0.18	0.23	L1	0.64	0.69	0.74
e	0.40 BSC			L2	0.15	0.20	0.25
				L3	1.49	1.54	1.59

©2022 Renesas Electronics Corporation

SLG59M1714V 16-pin STQFN PCB Landing Pattern

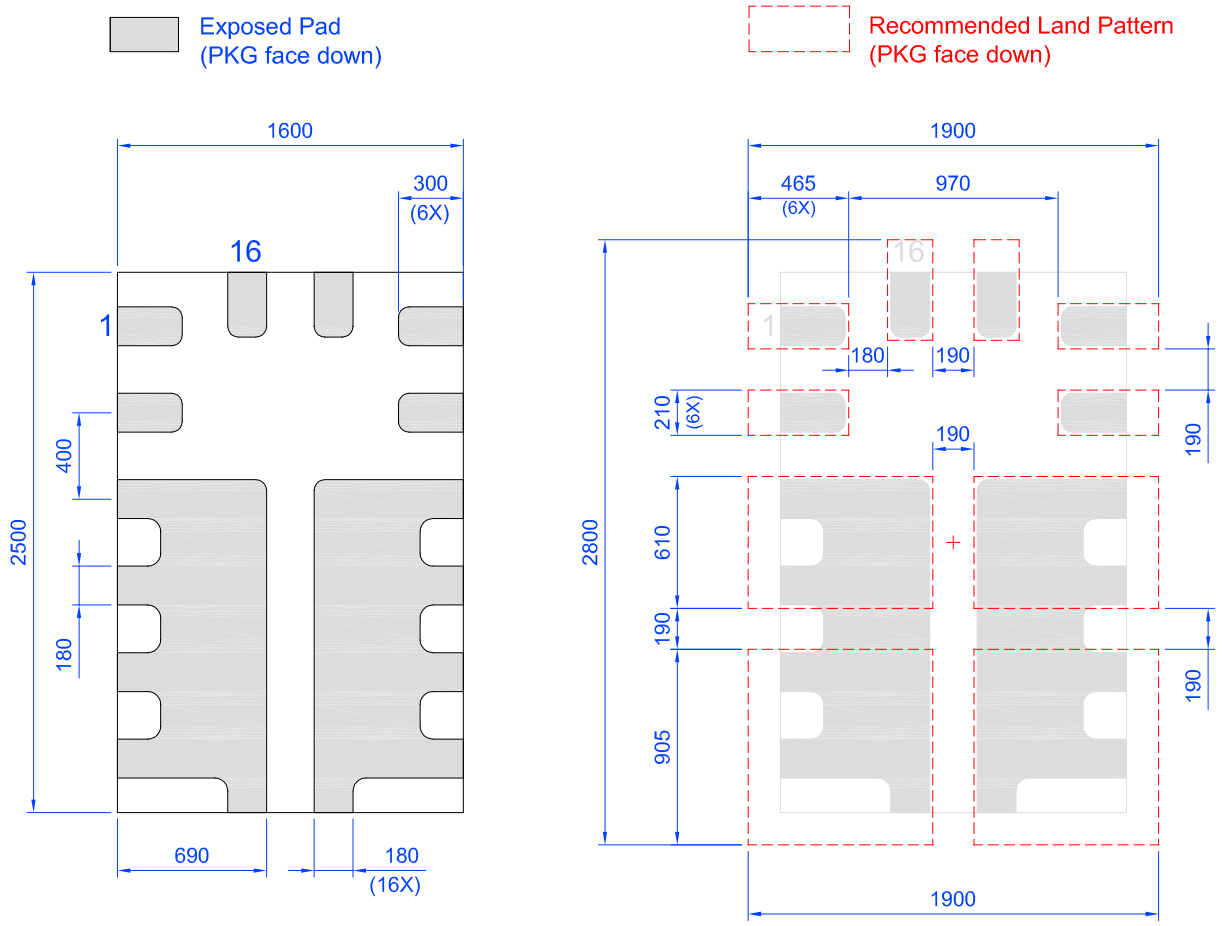

Unit: um

©2022 Renesas Electronics Corporation

Tape and Reel Specifications

Package Type	# of Pins	Nominal Package Size [mm]	Max Units		Reel & Hub Size [mm]	Leader (min)		Trailer (min)		Tape Width [mm]	Part Pitch [mm]
			per Reel	per Box		Pockets	Length [mm]	Pockets	Length [mm]		
STQFN 16L 1.6x2.5mm 0.4P FCA Green	16	1.6x2.5x 0.55mm	3000	3000	178/60	100	400	100	400	8	4

Carrier Tape Drawing and Dimensions

Package Type	Pocket BTM Length	Pocket BTM Width	Pocket Depth	Index Hole Pitch	Pocket Pitch	Index Hole Diameter	Index Hole to Tape Edge	Index Hole to Pocket Center	Tape Width
	A0	B0	K0	P0	P1	D0	E	F	W
STQFN 16L 1.6x2.5mm 0.4P FCA Green	1.8	2.8	0.7	4	4	1.55	1.75	3.5	8

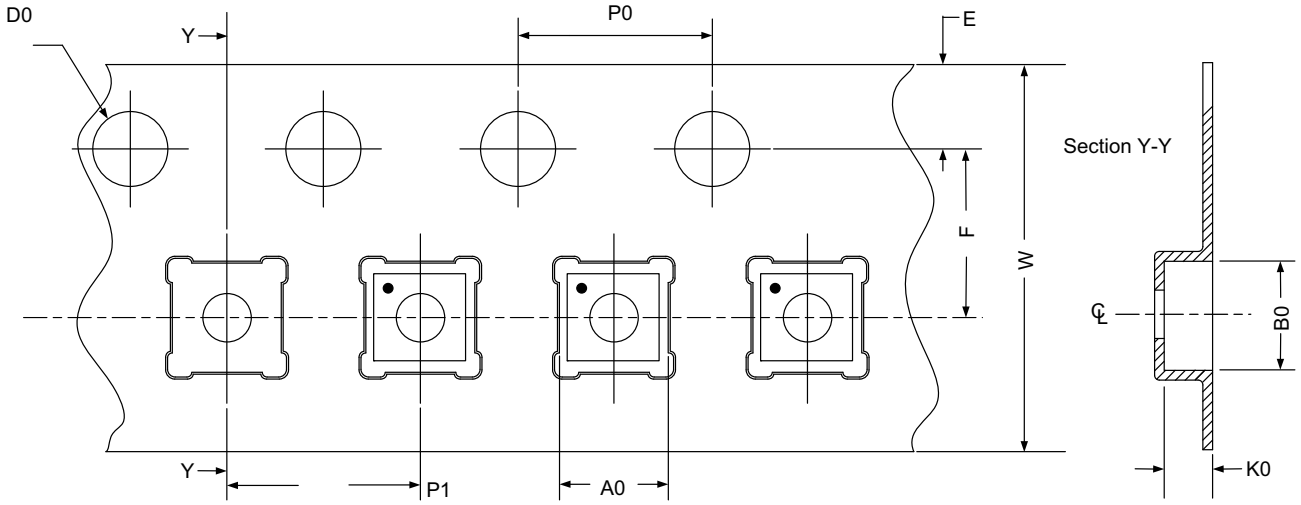

Refer to EIA-481 specification

Recommended Reflow Soldering Profile

Please see IPC/JEDEC J-STD-020: latest revision for reflow profile based on package volume of 2.2 mm^3 (nominal). More information can be found at www.jedec.org.

©2022 Renesas Electronics Corporation

Revision History

Date	Version	Change
2/2/2022	1.02	Updated Company name and logo Fixed typos
4/19/2019	1.01	Updated Style and Formatting Added Layout Guidelines Fixed typos
2/1/2017	1.00	Production Release

©2022 Renesas Electronics Corporation

IMPORTANT NOTICE AND DISCLAIMER

RENESAS ELECTRONICS CORPORATION AND ITS SUBSIDIARIES (“RENESAS”) PROVIDES TECHNICAL SPECIFICATIONS AND RELIABILITY DATA (INCLUDING DATASHEETS), DESIGN RESOURCES (INCLUDING REFERENCE DESIGNS), APPLICATION OR OTHER DESIGN ADVICE, WEB TOOLS, SAFETY INFORMATION, AND OTHER RESOURCES “AS IS” AND WITH ALL FAULTS, AND DISCLAIMS ALL WARRANTIES, EXPRESS OR IMPLIED, INCLUDING, WITHOUT LIMITATION, ANY IMPLIED WARRANTIES OF MERCHANTABILITY, FITNESS FOR A PARTICULAR PURPOSE, OR NON-INFRINGEMENT OF THIRD-PARTY INTELLECTUAL PROPERTY RIGHTS.

These resources are intended for developers who are designing with Renesas products. You are solely responsible for (1) selecting the appropriate products for your application, (2) designing, validating, and testing your application, and (3) ensuring your application meets applicable standards, and any other safety, security, or other requirements. These resources are subject to change without notice. Renesas grants you permission to use these resources only to develop an application that uses Renesas products. Other reproduction or use of these resources is strictly prohibited. No license is granted to any other Renesas intellectual property or to any third-party intellectual property. Renesas disclaims responsibility for, and you will fully indemnify Renesas and its representatives against, any claims, damages, costs, losses, or liabilities arising from your use of these resources. Renesas' products are provided only subject to Renesas' Terms and Conditions of Sale or other applicable terms agreed to in writing. No use of any Renesas resources expands or otherwise alters any applicable warranties or warranty disclaimers for these products.

(Disclaimer Rev.1.01 Jan 2024)

Corporate Headquarters

TOYOSU FORESIA, 3-2-24 Toyosu,
Koto-ku, Tokyo 135-0061, Japan
www.renesas.com

Trademarks

Renesas and the Renesas logo are trademarks of Renesas Electronics Corporation. All trademarks and registered trademarks are the property of their respective owners.

Contact Information

For further information on a product, technology, the most up-to-date version of a document, or your nearest sales office, please visit www.renesas.com/contact-us/.

© 2024 Renesas Electronics Corporation. All rights reserved.

Looking for pricing, stock, or lifecycle information?

Click below to explore more details on WIN SOURCE:

- View SLG59M1714V on WIN SOURCE
- Renesas Electronics America Information

Optimize Your Supply Chain with WIN SOURCE Solutions

- Global Sourcing Solution
- Obsolete Management
- Cost Control Management
- Shortage Management
- Alternative Solution
- Excess Inventory Management