THE DATASHEET OF

N74F00N,602

www.win-source.net 0086-755-83957316

Important notice

Dear Customer,

On 7 February 2017 the former NXP Standard Product business became a new company with the tradename **Nexperia**. Nexperia is an industry leading supplier of Discrete, Logic and PowerMOS semiconductors with its focus on the automotive, industrial, computing, consumer and wearable application markets

In data sheets and application notes which still contain NXP or Philips Semiconductors references, use the references to Nexperia, as shown below.

Instead of http://www.nxp.com, http://www.philips.com/ or http://www.semiconductors.philips.com/, use **http://www.nexperia.com**

Instead of sales.addresses@www.nxp.com or sales.addresses@www.semiconductors.philips.com, use **salesaddresses@nexperia.com** (email)

Replace the copyright notice at the bottom of each page or elsewhere in the document, depending on the version, as shown below:
- © NXP N.V. (year). All rights reserved or © Koninklijke Philips Electronics N.V. (year). All rights reserved
Should be replaced with:
- **© Nexperia B.V. (year). All rights reserved**.

If you have any questions related to the data sheet, please contact our nearest sales office via e-mail or telephone (details via **salesaddresses@nexperia.com**). Thank you for your cooperation and understanding,

Kind regards,

Team Nexperia

DATA SHEET

74F06
Inverter/buffer drivers

Product data
Supersedes data of 1992 Jul 24

2004 Mar 12

Philips
Semiconductors

PHILIPS

Hex inverter/buffer drivers (open-collector)

FEATURES

- Open Collector output drive 64mA
- High speed
- 12V output termination voltage

TYPE	TYPICAL PROPAGATION DELAY	TYPICAL SUPPLY CURRENT (TOTAL)
74F06	3.5ns	30mA

ORDERING INFORMATION

DESCRIPTION	TYPE NUMBER	PKG DWG #
14-pin plastic dual in-line package	N74F06N	SOT27–1
14-pin plastic small outline package	N74F06D	SOT108–1

PIN CONFIGURATIONS

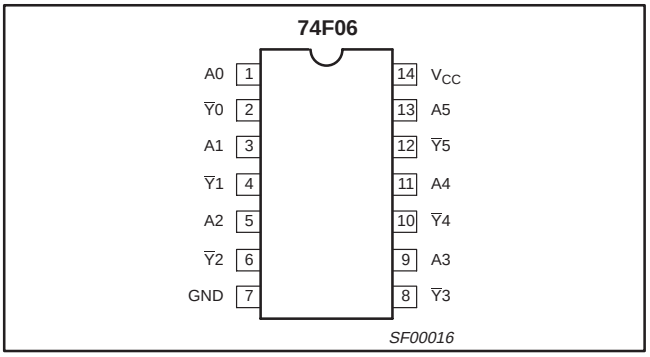

LOGIC SYMBOLS

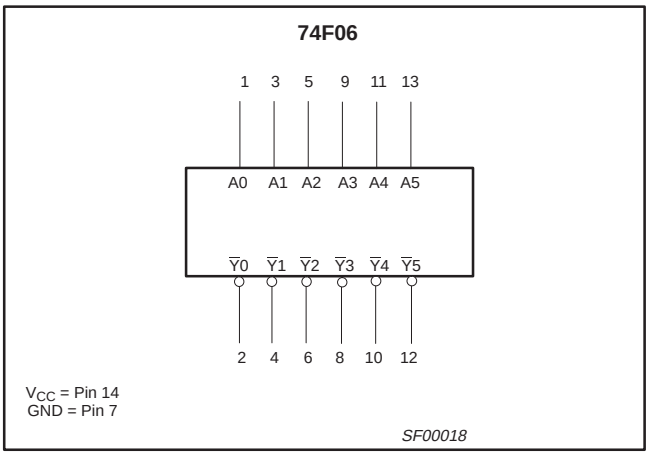

IEC/IEEE SYMBOLS

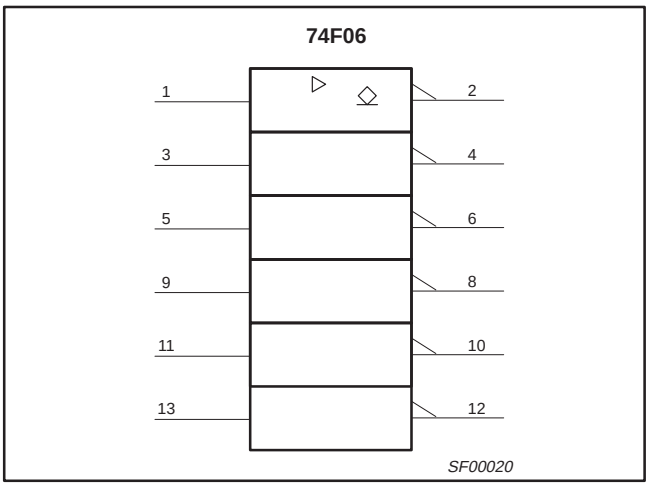

LOGIC DIAGRAMS

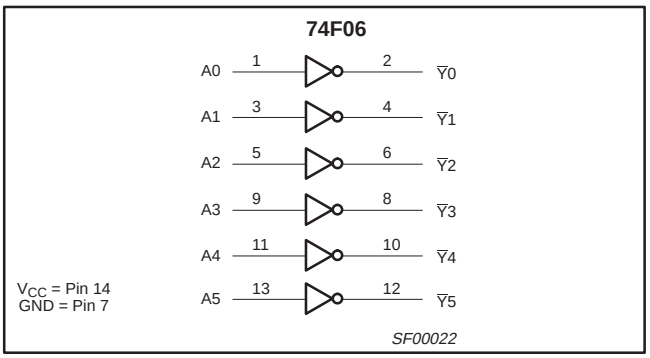

INPUT AND OUTPUT LOADING AND FAN OUT TABLE

PINS	DESCRIPTION	74F (U.L.) HIGH/LOW	LOAD VALUE HIGH/LOW
An	Data inputs	1.0/1.0	20μA/0.6mA
$\overline{Y}$n	Data outputs	OC/106.7	OC/64mA

NOTES:
1. One (1.0) FAST unit load is defined as: 20μA in the High state and 0.6mA in the Low state.
2. OC = Open Collector

FUNCTION TABLE

INPUTS	OUTPUTS
An	**$\overline{Y}$n**
L	H
H	L

NOTES:
1. H = High voltage level
2. L = Low voltage level

ABSOLUTE MAXIMUM RATINGS

(Operation beyond the limit set forth in this table may impair the useful life of the device.
Unless otherwise noted these limits are over the operating free air temperature range.)

SYMBOL	PARAMETER	RATING	UNIT
V_{CC}	Supply voltage	–0.5 to +7.0	V
V_{IN}	Input voltage	–0.5 to +7.0	V
I_{IN}	Input current	–30 to +5	mA
V_{OUT}	Voltage applied to output in High output state	–0.5 to 12	V
I_{OUT}	Current applied to output in Low output state	128	mA
T_{amb}	Operating free air temperature range	0 to +70	°C
T_{stg}	Storage temperature range	–65 to +150	°C

RECOMMENDED OPERATING CONDITIONS

SYMBOL	PARAMETER	LIMITS			UNIT
		MIN	NOM	MAX	
V_{CC}	Supply voltage	4.5	5.0	5.5	V
V_{IH}	High-level input voltage	2.0			V
V_{IL}	Low-level input voltage			0.8	V
I_{Ik}	Input clamp current			–18	mA
V_{OH}	High-level output voltage			12	V
I_{OL}	Low-level output current			64	mA
T_{amb}	Operating free air temperature range	0		+70	°C

DC ELECTRICAL CHARACTERISTICS

(Over recommended operating free-air temperature range unless otherwise noted.)

SYMBOL	PARAMETER		TEST CONDITIONS[1]			LIMITS			UNIT
						MIN	TYP[2]	MAX	
I_{OH}	High-level output current		V_{CC} = MIN, V_{IL} = MAX, V_{OH} = MAX, V_{IH} = MIN					250	µA
V_{OL}	Low-level output voltage		V_{CC} = MIN, V_{IL} = MAX, V_{IH} = MIN	I_{OL} = MAX	±10% V_{CC}		0.30	0.50	V
					±5% V_{CC}		0.30	0.50	V
V_{IK}	Input clamp voltage		V_{CC} = MIN, $I_I = I_{IK}$				–0.73	–1.2	V
I_I	Input current at maximum input voltage		V_{CC} = MAX, V_I = 7.0V					100	µA
I_{IH}	High-level input current		V_{CC} = MAX, V_I = 2.7V					20	µA
I_{IL}	Low-level input current		V_{CC} = MAX, V_I = 0.5V					–0.6	mA
I_{CC}	Supply current (total)	I_{CCH}	V_{CC} = MAX				5.0	8.0	mA
		I_{CCL}					30	43	mA

NOTES:
1. For conditions shown as MIN or MAX, use the appropriate value specified under recommended operating conditions for the applicable type.
2. All typical values are at V_{CC} = 5V, T_{amb} = 25°C.

AC ELECTRICAL CHARACTERISTICS

SYMBOL	PARAMETER	TEST CONDITION	LIMITS					UNIT
			V_{CC} = +5.0V T_{amb} = +25°C C_L = 50pF, R_L = 100Ω			V_{CC} = +5.0V ± 10% T_{amb} = 0°C to +70°C C_L = 50pF, R_L = 100Ω		
			Min	Typ	Max	Min	Max	
t_{PLH} t_{PHL}	Propagation delay An to $\overline{Y}$n	Waveform 1	2.0 1.5	3.5 3.0	6.0 5.5	1.5 1.0	6.5 6.0	ns

TYPICAL PROPAGATION DELAYS VERSUS LOAD FOR OPEN COLLECTOR OUTPUTS

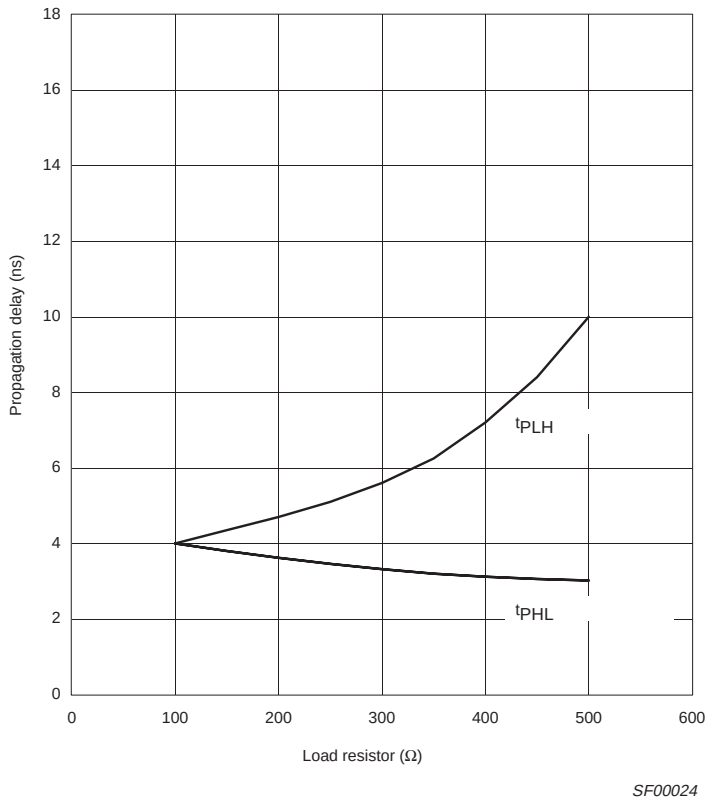

NOTE:
When using Open-Collector parts, the value of the pull-up resistor greatly affects the value of the t_{PLH}. For example, changing the specified pull-up resistor value from 500Ω to 100Ω will improve the t_{PLH} up to 50% with only a slight increase in the t_{PHL}. However, if the value of the pull-up resistor is changed, the user must make certain that the total I_{OL} current through the resistor and the total I_{IL}'s of the receivers does not exceed the I_{OL} maximum specification.

AC WAVEFORMS

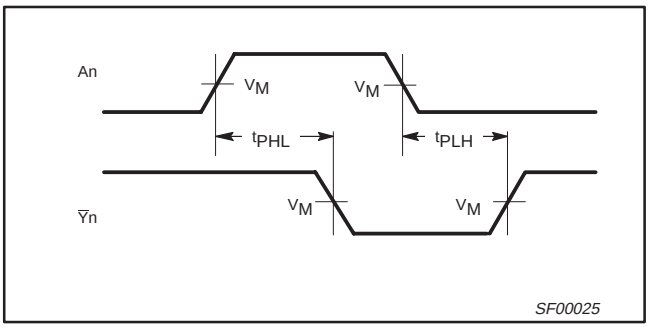

Waveform 1. Propagation delay for inverting outputs

NOTE:
For all waveforms, V_M = 1.5V.

TEST CIRCUIT AND WAVEFORMS

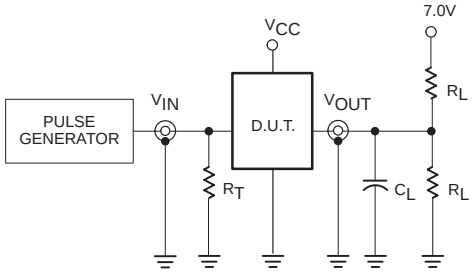

Test Circuit for Open Collector Outputs

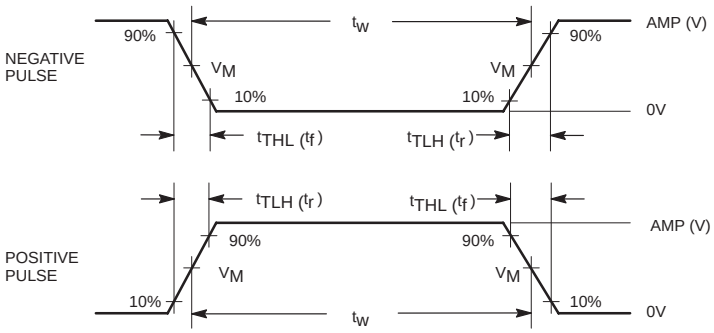

Input Pulse Definition

DEFINITIONS:

R_L = Load resistor; see AC electrical characteristics for value.

C_L = Load capacitance includes jig and probe capacitance; see AC electrical characteristics for value.

R_T = Termination resistance should be equal to Z_{OUT} of pulse generators.

family	INPUT PULSE REQUIREMENTS					
	amplitude	V_M	rep. rate	t_w	t_{TLH}	t_{THL}
74F	3.0V	1.5V	1MHz	500ns	2.5ns	2.5ns

SF00027

DIP14: plastic dual in-line package; 14 leads (300 mil) **SOT27-1**

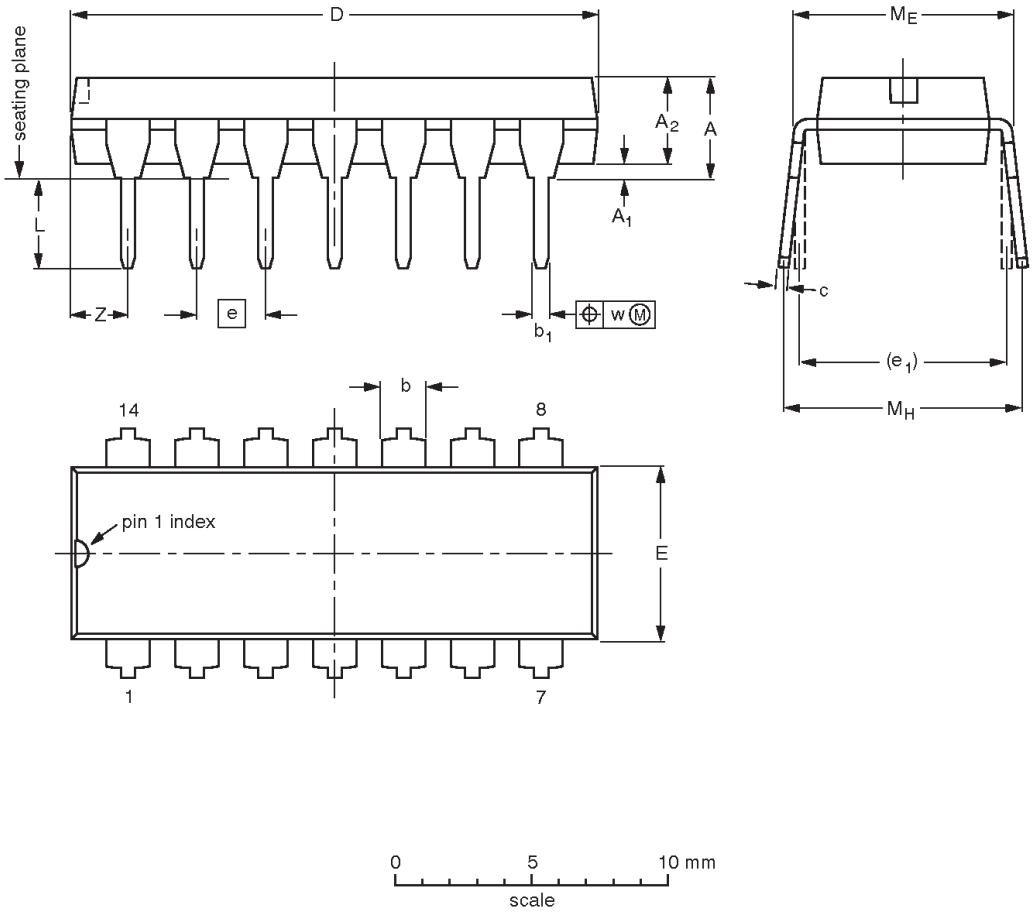

DIMENSIONS (inch dimensions are derived from the original mm dimensions)

UNIT	A max.	A_1 min.	A_2 max.	b	b_1	c	D (1)	E (1)	e	e_1	L	M_E	M_H	w	Z (1) max.
mm	4.2	0.51	3.2	1.73 1.13	0.53 0.38	0.36 0.23	19.50 18.55	6.48 6.20	2.54	7.62	3.60 3.05	8.25 7.80	10.0 8.3	0.254	2.2
inches	0.17	0.02	0.13	0.068 0.044	0.021 0.015	0.014 0.009	0.77 0.73	0.26 0.24	0.1	0.3	0.14 0.12	0.32 0.31	0.39 0.33	0.01	0.087

Note

1. Plastic or metal protrusions of 0.25 mm (0.01 inch) maximum per side are not included.

OUTLINE VERSION	REFERENCES				EUROPEAN PROJECTION	ISSUE DATE
	IEC	JEDEC	JEITA			
SOT27-1	050G04	MO-001	SC-501-14			~~99-12-27~~ 03-02-13

SO14: plastic small outline package; 14 leads; body width 3.9 mm **SOT108-1**

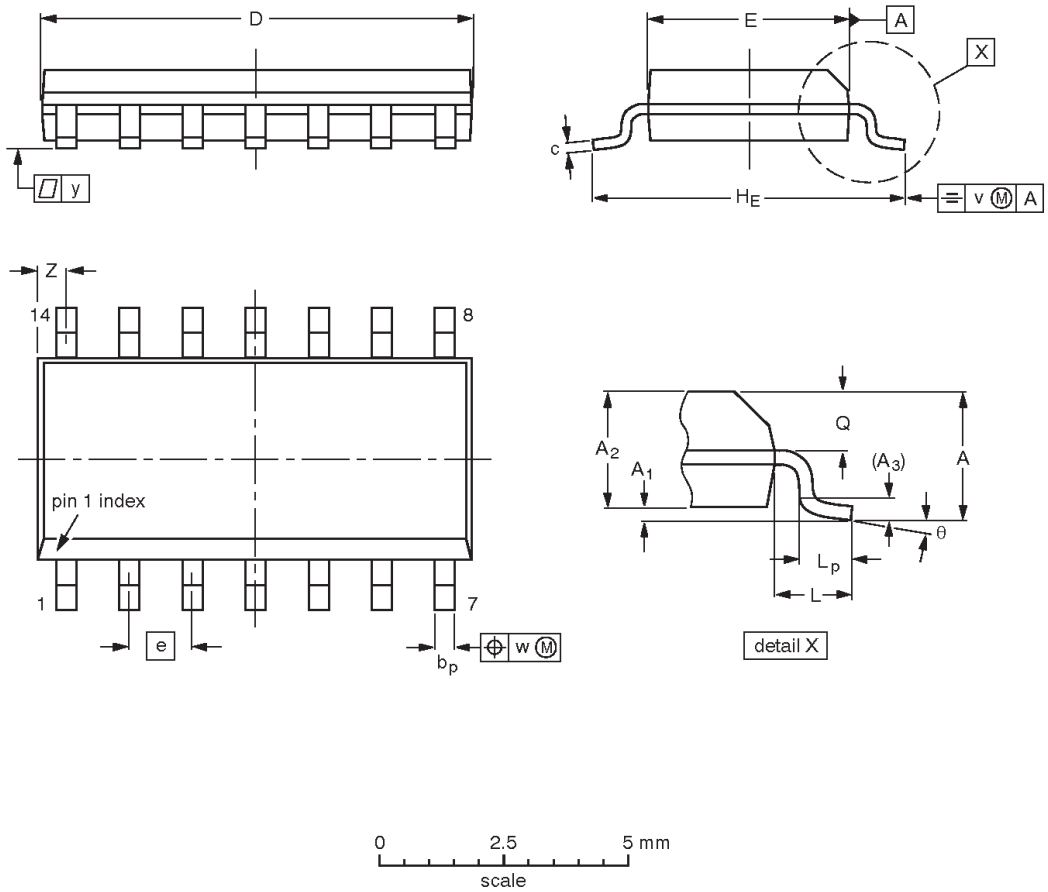

DIMENSIONS (inch dimensions are derived from the original mm dimensions)

UNIT	A max.	A_1	A_2	A_3	b_p	c	D(1)	E(1)	e	H_E	L	L_p	Q	v	w	y	Z(1)	θ
mm	1.75	0.25 0.10	1.45 1.25	0.25	0.49 0.36	0.25 0.19	8.75 8.55	4.0 3.8	1.27	6.2 5.8	1.05	1.0 0.4	0.7 0.6	0.25	0.25	0.1	0.7 0.3	8° 0°
inches	0.069	0.010 0.004	0.057 0.049	0.01	0.019 0.014	0.0100 0.0075	0.35 0.34	0.16 0.15	0.05	0.244 0.228	0.041	0.039 0.016	0.028 0.024	0.01	0.01	0.004	0.028 0.012	

Note

1. Plastic or metal protrusions of 0.15 mm (0.006 inch) maximum per side are not included.

OUTLINE VERSION	REFERENCES				EUROPEAN PROJECTION	ISSUE DATE
	IEC	JEDEC	JEITA			
SOT108-1	076E06	MS-012				~~99-12-27~~ 03-02-19

REVISION HISTORY

Rev	Date	Description
_3	20040312	**Product data (9397 750 13034); supersedes data sheet 74F06_A_7_A_2 of 1992 Jul 24 (9397 750 05054).** Modifications: ● Delete all references to 74F06A and 74F07A (product discontinued). ● Separate 74F06 and 74F07 into standalone data sheets.
_2	19920724	**Product data (9397 750 05054); supersedes previous version.**

Hex inverter/buffer drivers (open-collector)

74F06

Data sheet status

Level	Data sheet status [1]	Product status [2] [3]	Definitions
I	Objective data	Development	This data sheet contains data from the objective specification for product development. Philips Semiconductors reserves the right to change the specification in any manner without notice.
II	Preliminary data	Qualification	This data sheet contains data from the preliminary specification. Supplementary data will be published at a later date. Philips Semiconductors reserves the right to change the specification without notice, in order to improve the design and supply the best possible product.
III	Product data	Production	This data sheet contains data from the product specification. Philips Semiconductors reserves the right to make changes at any time in order to improve the design, manufacturing and supply. Relevant changes will be communicated via a Customer Product/Process Change Notification (CPCN).

[1] Please consult the most recently issued data sheet before initiating or completing a design.

[2] The product status of the device(s) described in this data sheet may have changed since this data sheet was published. The latest information is available on the Internet at URL http://www.semiconductors.philips.com.

[3] For data sheets describing multiple type numbers, the highest-level product status determines the data sheet status.

Definitions

Short-form specification — The data in a short-form specification is extracted from a full data sheet with the same type number and title. For detailed information see the relevant data sheet or data handbook.

Limiting values definition — Limiting values given are in accordance with the Absolute Maximum Rating System (IEC 60134). Stress above one or more of the limiting values may cause permanent damage to the device. These are stress ratings only and operation of the device at these or at any other conditions above those given in the Characteristics sections of the specification is not implied. Exposure to limiting values for extended periods may affect device reliability.

Application information — Applications that are described herein for any of these products are for illustrative purposes only. Philips Semiconductors make no representation or warranty that such applications will be suitable for the specified use without further testing or modification.

Disclaimers

Life support — These products are not designed for use in life support appliances, devices, or systems where malfunction of these products can reasonably be expected to result in personal injury. Philips Semiconductors customers using or selling these products for use in such applications do so at their own risk and agree to fully indemnify Philips Semiconductors for any damages resulting from such application.

Right to make changes — Philips Semiconductors reserves the right to make changes in the products—including circuits, standard cells, and/or software—described or contained herein in order to improve design and/or performance. When the product is in full production (status 'Production'), relevant changes will be communicated via a Customer Product/Process Change Notification (CPCN). Philips Semiconductors assumes no responsibility or liability for the use of any of these products, conveys no license or title under any patent, copyright, or mask work right to these products, and makes no representations or warranties that these products are free from patent, copyright, or mask work right infringement, unless otherwise specified.

Contact information

For additional information please visit
http://www.semiconductors.philips.com. Fax: **+31 40 27 24825**

For sales offices addresses send e-mail to:
sales.addresses@www.semiconductors.philips.com.

© Koninklijke Philips Electronics N.V. 2004
All rights reserved. Printed in U.S.A.

Date of release: 03-04

Document order number: 9397 750 13034

Let's make things better.

Philips Semiconductors

PHILIPS

Looking for pricing, stock, or lifecycle information?

Click below to explore more details on WIN SOURCE:

- View N74F00N,602 on WIN SOURCE
- Nexperia USA Inc. Information

Optimize Your Supply Chain with WIN SOURCE Solutions

- Global Sourcing Solution
- Obsolete Management
- Cost Control Management
- Shortage Management
- Alternative Solution
- Excess Inventory Management