THE DATASHEET OF

D38999/28-8K

www.win-source.net 0086-755-83957316

Glenair®

MIL-DTL-38999 Cylindrical Connectors

Hermetics, Filters, Environmentals, Feed-Thrus, Lanyards, Sav-Cons® and More!

United States ▪ United Kingdom ▪ Germany ▪ France ▪ Nordic ▪ Italy ▪ Spain ▪ Japan

1st Edition • September, 2008

1000 Hour Grey™

The Advanced Formula Ni-PTFE Plating Process for EMC Applications

Cadmium Free RoHS-Compliant Plating Process Breaks 1000 Hour Corrosion Protection Barrier!

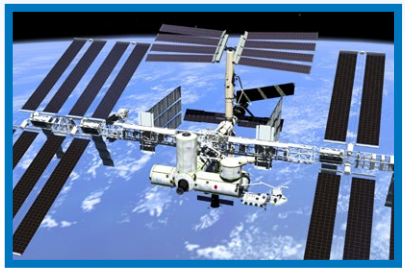

The MIL-DTL-38999 Rev. L detail specification establishes several new cadmium-free conductive plating options including high-performance nickel-fluorocarbon polymer. The Glenair advanced formula **1000 Hour Grey™** *plating process (Ni-PTFE) meets all D38999 performance requirements including a shell-to-shell conductivity maximum 2.5 millivolt drop potential.* **1000 Hour Grey™** *delivers outstanding performance in a broad range of land, sea, air and space interconnect applications. The non-reflective, non-magnetic, gun-metal gray surface finish is an ideal choice for tactical military systems with extraordinary corrosion protection and EMC requirements.*

Advanced Durability, Conductivity, and Lubricity Plus Outstanding Corrosion Resistance!

The mechanical, electrical and environmental performance of **1000 Hour Grey™** *is truly outstanding, far surpassing that of other metal alloy/fluorocarbon polymer plating solutions:*

- Salt spray 1000 Hrs. static, 500 hrs. dynamic
- Low shell-to-shell resistance
- -55°C to 175°C temp. Rating
- 336+ hrs. sulfur dioxide resistance
- Non-magnetic
- Cadmium free
- Low coefficient of friction
- Hexavalent chromium free
- Potassium formate resistant
- Max 2.5 Millivolt drop potential
- 500+ Mating cycles
- Low outgassing
- RoHS compliant
- Plating code: MT

Glenair®

Glenair, Inc.

1211 Air Way • Glendale, CA 91201-2497 • Tel: 818-247-6000 • Fax: 818-500-9912 • E-Mail: sales@glenair.com • Rev. 04.12.16

MIL-DTL-38999
Qualified Connectors and Derivatives

A Introduction to MIL-DTL-38999 Cylindrical Connectors A

B Hermetic Connectors B

C EMI/EMP Filter Connectors C

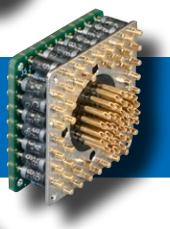

D Environmental Connectors D

E Twinax and Quadrax Connectors E

F Bulkhead Feed-Thrus F

G Sav-Con® Connector Savers G

H Connector Accessories and Tools H

Turn to Individual Sections for Detailed Table of Contents

MIL-DTL-38999 Environmental Class Connector Overview

Series I

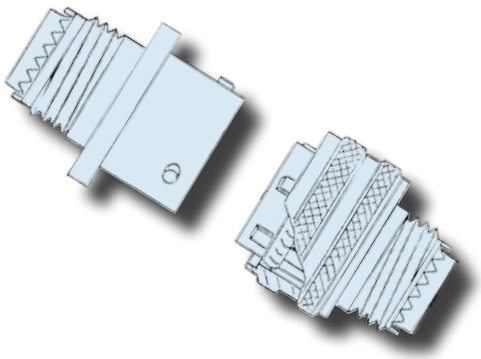

MIL-DTL-38999 is a high-performance connector family designed for cable-to-panel I/O applications in military aerospace and other demanding situations. Environmental class plugs and receptacles—with high-density insert arrangements (up to 128 contacts)—are available with crimp removable contacts, PC tails, and solder cups. Glenair manufactures a wide range of environmental class MIL-DTL-38999 type connectors including lanyard-release products, composite and specialty metal cable plugs and receptacles, and Coax contact equipped products. This table describes the most basic attributes for the environmental class products supplied by Glenair.

Series Description	Scoop-Proof 3-Point Bayonet Coupling
Supported Contact Types and Gauges	12, 16, 20, and 22 gauge contacts, standard density and 22 gauge high density arrangements; 3 to 128 contacts. Crimp, solder and PCB tails.
Coupling/Mating Design	Bayonet coupling; quick disconnect; positive locking, keyed.
EMI Shielding	Conductive plating and thick shell wall cross-sections provide effective EMI shielding to 40 dB minimum at 10 GHz.
Vibration and Shock	Excellent resistance to vibration and shock with no electrical discontinuity and no disengagement of the mated connectors per MIL-DTL-38999 (paragraph 3.26)
Mating Speed	120 ° or 1/3 turn to full mate
Materials	Aluminum, Composite or Stainless Shells, Silicone Seals per ZZ-R-765, Beryllium Copper Alloy, Gold Plated Contacts

© 2010 Glenair, Inc.

GLENAIR, INC. • 1211 AIR WAY • GLENDALE, CA 91201-2497 • 818-247-6000 • FAX 818-500-9912
www.glenair.com
E-Mail: sales@glenair.com

MIL-DTL-38999
Environmental Class Connectors
Overview

Series II	Series III	Series IV

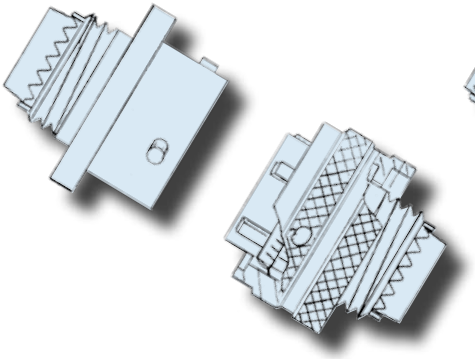
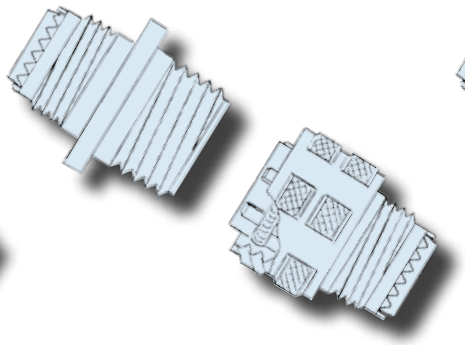
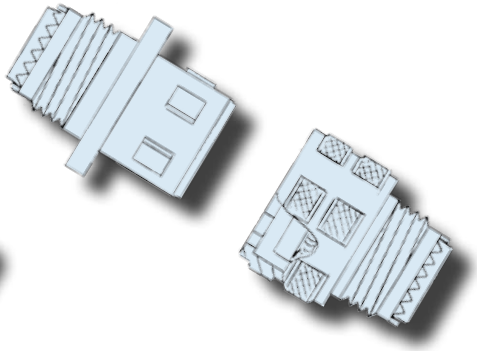

Low-Profile 3-Point Bayonet Coupling	Scoop-Proof, Triple Start, Self-Locking	Scoop-Proof, Breech Lock
12, 16, 20, and 22 gauge contacts, standard density and 22 gauge high density arrangements; 3 to 128 contacts. Crimp, solder and PCB tails.	12, 16, 20, and 22 gauge contacts, standard density and 22 gauge high density arrangements; 3 to 128 contacts. Crimp, solder and PCB tails.	12, 16, 20, and 22 gauge contacts, standard density and 22 gauge high density arrangements; 3 to 128 contacts. Crimp, solder and PCB tails.
Bayonet coupling design, quick disconnect, captive, keyed.	Triple-start threaded coupling design, rapid advance, self-locking and full-mate indicator, keyed.	Breech lock coupling design, rapid advance, self-locking, keyed.
Conductive plating and thick shell wall cross-sections provide effective EMI shielding to 40 dB minimum at 10 GHz.	Shell to shell bottoming, grounding fingers, conductive plating and thick shell wall cross-sections provide effective EMI shielding to 65 dB minimum at 10 GHz	Shell to shell bottoming, grounding fingers, conductive plating and thick shell wall cross-sections provide effective EMI shielding to 65 dB minimum at 10 GHz. Grounding before engagement of contacts.
Excellent resistance to vibration and shock with no electrical discontinuity and no disengagement of the mated connectors per MIL-DTL-38999 (paragraph 3.26)	Excellent resistance to vibration and shock with no electrical discontinuity and no disengagement of the mated connectors per MIL-DTL-38999 (paragraph 3.26)	Excellent resistance to vibration and shock with no electrical discontinuity and no disengagement of the mated connectors per MIL-DTL-38999 (paragraph 3.26)
120 ° or 1/3 turn to full mate	360 ° or one full turn to full mate	90° or 1/4 turn to full mate
Aluminum or Stainless Steel Shells, Silicone Seals per ZZ-R-765, Beryllium Copper Alloy, Gold Plated Contacts	Aluminum, CRES and Composite Shells, Silicone Seals per ZZ-R-765, Beryllium Copper Alloy, Gold Plated Contacts	Aluminum Shells, Silicone Seals per ZZ-R-765, Beryllium Copper Alloy, Gold Plated Contacts

© 2010 Glenair, Inc. CAGE CODE 06324 Printed in U.S.A.

MIL-DTL-38999 Hermetic Connectors

Hermetic connectors, such as the qualified MIL-DTL-38999 Series I, II, III and IV supplied by Glenair, are designed for use in pressurized or severe environmental applications. Typical environments include geophysical, medical and military aerospace—in fact, the requirement for connector hermeticity was originally driven by military electronic applications. Hermeticity is generally defined as the state or condition of being air or gas tight. In interconnect applications, "hermetic" refers to packaging technology designed to prevent gasses from passing through pressure barriers via the connector, as it is important to prevent any moisture in the leaked gas from condensing inside the pressurized enclosure. The point at which moisture will condense is called the "dew point"—or the precise moment when humidity, pressure, and temperature allows condensation to form.

Glenair typically specifies stainless steel, carbon steel, titanium or Kovar for its hermetic products to provide an effective barrier against gas ingress and corrosion caused by dew point condensation. The hermetic sealing helps insure against damage to sensitive electronic systems and components.

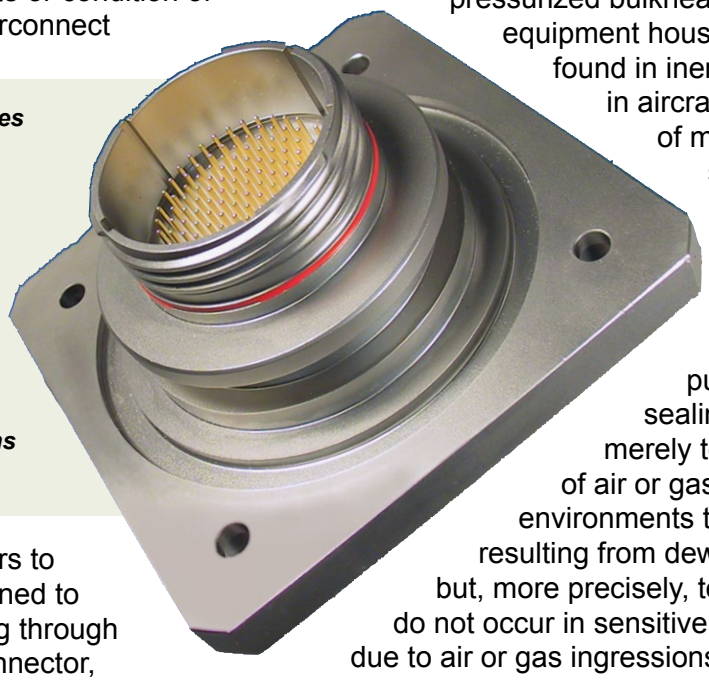

When an electric current must pass through a high-pressure differential barrier, the potential exists for gases, and, in some rare cases, particulate matter, to penetrate the barrier and, as described above, to form condensation in the equipment enclosure. In the receptacle cabling on the vacuum side of the barrier this may result in dielectric breakdown, corrosion, and loss of insulation resistance between conductors (a properly built plug assembly on the non-vacuum side is adequately sealed with conventional environmental protections and so is impervious to moisture ingress).

The classic hermetic application is a receptacle feed-through penetrating a pressurized bulkhead, or a pressurized equipment housing—such as is found in inertial navigation units in aircraft. The introduction of moisture-laden air into such an enclosure may be enough to produce false readings and other malfunctions in the device. The ultimate purpose of hermetic sealing then is not merely to avert the ingress of air or gas into pressurized environments to prevent corrosion resulting from dew point condensation, but, more precisely, to insure malfunctions do not occur in sensitive electronic systems due to air or gas ingressions.

Connector hermeticity may be negatively affected both by the permeability of shell materials and the quality of the sealing technology. Metal materials are typically chosen due to their relative impermeability to gas, although certain plastics may also be used. Glenair typically specifies stainless steel, carbon steel, titanium or Kovar for its hermetic products, as all these base materials provide an effective barrier against gas ingress.

But even metal materials are permeable to gas leakage to some degree, and the minimal permeability of metal materials can be worsened when weld and solder joints are formed between

© 2010 Glenair, Inc.

connector shell materials and the base material of the bulkhead. Electrode coatings used in welding readily attract moisture in the work causing micro cracks and fissures. If other stresses are present, such as vibration and shock, micro-cracking can progress to larger fissures visible to the human eye. Optimizing hermeticity should therefore always include examination of welds for any cracks or fissures that could provide a leakage path. Although moderately effective sealing may be produced with simple techniques such as epoxy potting, fused glass-to-metal seals are usually specified in high-reliability applications.

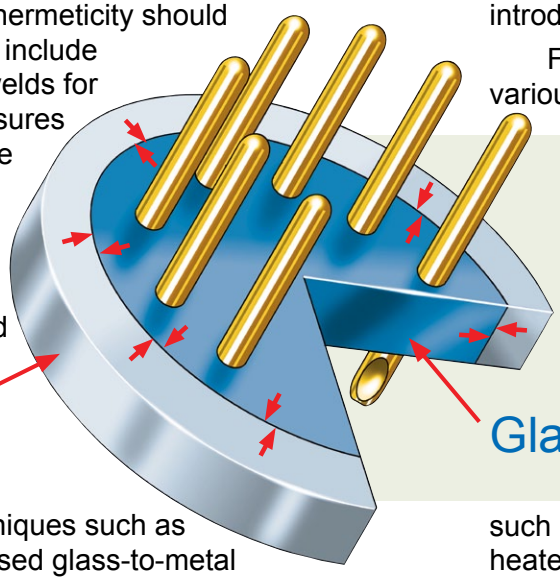

In hermetic connector manufacturing, the glass material is introduced either as separate glass beads or as a pre-formed glass seal insulator tooled to precise dimensions. The glass must be exactingly selected for each application according to its ability to form a strong bond with the metal materials.

Glass is an excellent insulator, bonds well to metallic surfaces and is extremely corrosion resistant. And because of its robust mechanical strength and resistance to radical changes in temperature and pressure, glass seals are extremely resistant to any cracking which may introduce leaks into the hermetic package.

Fused glass seals may be produced from various recipes of ground, non-crystalline solids such as silicates, borates and phosphates. When heated to high temperature and then cooled, these materials fuse into an amorphous solid called glass.

In Matched Seal hermetics, thermal expansion of the glass and metal materials are nearly the same. The stress in the glass is therefore relatively small–an important factor in the design of Micro-D hermetic connectors, due to varying degrees of stress on the glass caused by the rectangular shape.

In hermetic connector manufacturing, the glass material is introduced either as separate glass beads or as a pre-formed glass seal insulator tooled to precise dimensions. The glass must be exactingly selected for each application according to its ability to form a strong bond with the chosen metal materials. Electrical properties, such as high withstanding voltage and dielectric strength are also considered as is thermal and shock stability.

Depending on the style of connector being produced (rectangular versus circular, for example) two distinct categories of glass-seal hermetics may be specified. These are known as Matched and Mismatched (or Compression) Seals.

In Matched Seal hermetics, the thermal expansion and contraction of the glass and metal materials are relatively close, usually within 10% of each other, resulting in a product in which the stress in the glass is relatively small.

© 2010 Glenair, Inc.

GLENAIR, INC. • 1211 AIR WAY • GLENDALE, CA 91201-2497 • 818-247-6000 • FAX 818-500-9912
www.glenair.com E-Mail: sales@glenair.com

MIL-DTL-38999
Hermetic Connectors
Overview

Matched Seals are extremely important in glass hermetic connectors such as the Micro-D, since the rectangular shape of the connector shell can exert varying degrees of stress on the glass. At ambient temperatures, the glass is well wetted (bonded) to the metal shell and contacts, but under little or no pressure or stress. Matched Seals can withstand high thermal and mechanical shocks, and are generally easier to manufacture than Mismatched (Compression) Hermetic Seals.

Kovar, a combination of iron, nickel and cobalt, is the material of choice for Match Seal hermetic receptacles—both shells and contacts.

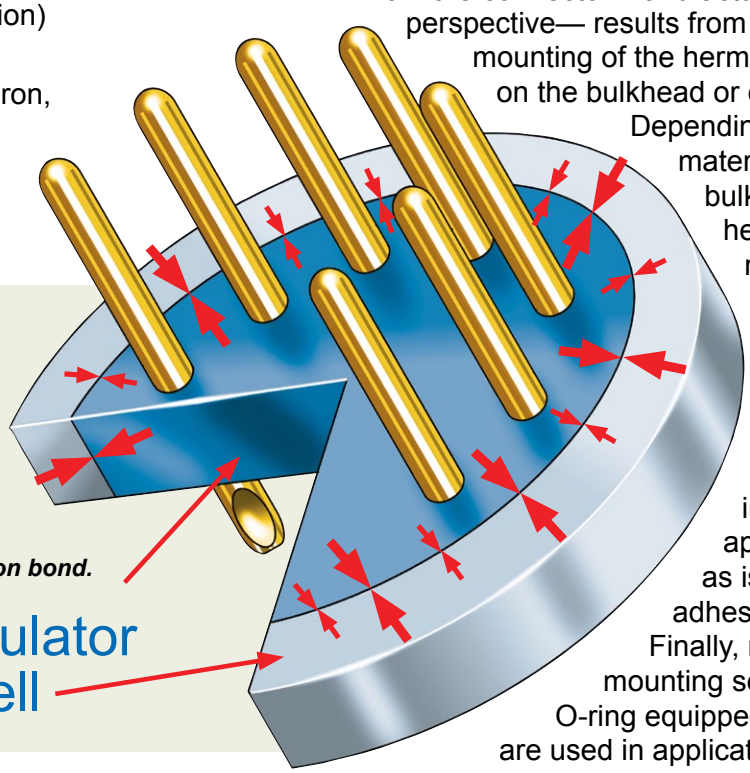

In Mismatched (Compression) Seals, the thermal expansion/ contraction of the metal exceeds that of the glass. During cooling, the metal contracts into the already solidifying glass to form an extremely robust compression bond.

Kovar is a low-expansion metal with a coefficient of expansion rating matched to the glass material that forms the hermetic seal.

In Mismatched (Compression) Seals, the thermal expansion/contraction of the metal exceeds that of the glass. During the firing process, the metal materials, usually stainless steel, expand at a greater rate than the glass. During cooling, the metals contract back into the already solidifying glass to form an extremely robust compression bond. This type of seal is consequently the most frequently specified for connectors used in extreme, high-pressure applications since the seal produced is reliable to pressures as high as 14,000 psi (1000 bars). The MIL-DTL-38999 connector falls into this category.

The total potential for leakage in a hermetic connector is the sum of any permeation which may occur via the metal materials themselves through cracks or open pores, and any leakage that may result from a defective seal. An additional source of leakage—uncontrolled from the connector manufacturer's perspective— results from sub-standard mounting of the hermetic package on the bulkhead or enclosure. Depending on the surface material of the bulkhead, hermetic receptacles may be welded or soldered in place. Low temperature brazing is also possible in certain applications as is the use of adhesive sealants. Finally, mechanical mounting seals such as O-ring equipped jam-nut mounts are used in applications where the cost or difficulty of welding or soldering is impractical.

Regardless of the choice of mounting technology, care must be given to ensure inadvertent leakage paths are not introduced. It is also important to note that vapor condensation in vacuum enclosures may be affected by the material makeup of component parts inside the enclosure. Materials such as silicones, adhesives, lubricants and Teflon insulation can all outgas water vapor, and so contribute to the total vapor pressure inside the enclosure. Vapor pressure directly impacts the condensation dew point of the protected environment.

© 2010 Glenair, Inc. CAGE CODE 06324 Printed in U.S.A.

Hermetic seals are qualified via various methodologies including helium testing and dye penetrant. The purpose of both types of tests is to detect and measure leakage under pressure. The dye penetrant method has the advantage of revealing the exact location of a leak, while Helium testing measures overall leakage within the hermetic device. In both types of tests, a pressure differential between the internal volume of the package and the external environment is created.

The resultant pressure gradient causes the helium or liquid dye to diffuse through the connector shell, contacts and/or glass seals. Quantitative and qualitative measurements are then taken using appropriate sensing instruments. Glenair MIL-DTL-38999 qualified hermetic connectors are rated to 1 X 10^{-6} cc/second maximum helium leakage rate.

As with other connector classes, customers may specify the connector coupling style (threaded, bayonet, solder mount, etc.) pin or socket count and layout, contact termination type (solder cup, flat eyelet or PCB termination), conductive or non-conductive finish, polarization and so on.

EMI/EMP Filter Connectors

"Filtering" or suppression of electromagnetic noise within the connector package is reliably accomplished through the integration of capacitors and diodes into the connector to segregate interfering high-frequency or high voltage noise from the desired lower frequency signals. The capacitors strip off the interfering noise from the signal as it passes through the filter device. While various types of capacitor filters are available, perhaps the most widely applied is the Planar Array type.

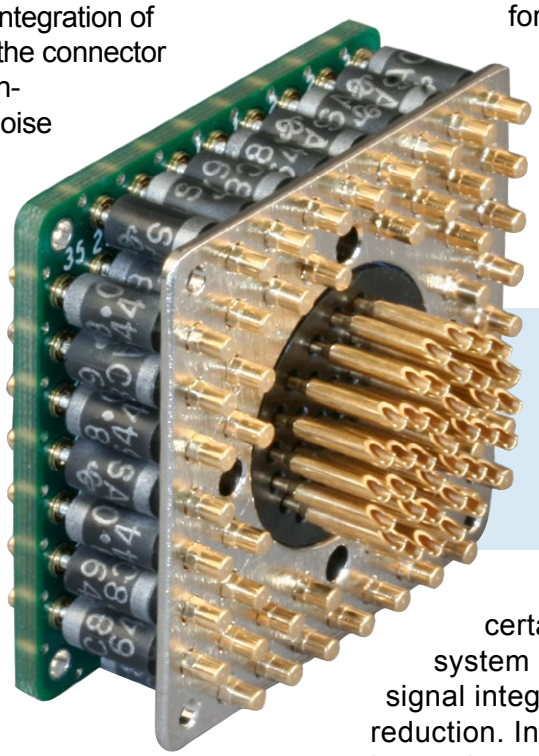

Planar Arrays are extremely effective at filtering high-frequency interference. Planar Array designs utilize ceramic capacitor arrays and ferrite inductors which externally surround each contact, and may be supplied in a single monolithic block to fit into any connector size or shape. Planar arrays may be fabricated with different capacitive values on individual pins for additional flexibility in achieving the desired level of EMC. Diodes are used to clamp the voltage below a certain value, thereby protecting the electronic circuity. They are typically integrated into the connector using a small printed circuit board.

Ferrite elements and capacitors can be integrated into any connector package envelope.

Using filter technology has certain advantages to the electrical system engineer, including improved signal integrity as well as size and weight reduction. In addition, filters can be incorporated into an interconnect system late in the research and development process—for example after an unforeseen emission problem has been detected.

In every filter application the signal levels

© 2010 Glenair, Inc.

GLENAIR, INC. • 1211 AIR WAY • GLENDALE, CA 91201-2497 • 818-247-6000 • FAX 818-500-9912
www.glenair.com E-Mail: sales@glenair.com

and frequency bands must be well understood in order to select the appropriate mode or type of filter technology.

For example, electronic equipment used by avionic systems typically spans the electromagnetic spectrum from a few kilohertz to several gigahertz. At the low end, Omega Navigation, which is used to fix aircraft position within a network of ground based transmitters, operates in the frequency range of 10 to 14 KHz. VHF Omnidirectional Range Finders (VOR) are radio beacons used in point-to-point navigation. They operate from 108 to 118 MHz. Glideslope Systems used during landings operate in the 328 to 335 MHz range. Distance-Measuring Equipment (DME), which gauges the space between the aircraft in the sky and ground-based transponders operate at frequencies of just over 1 GHz.

Clearly, potential EMI in the application environment described above covers a broad range of frequencies. Filter modes and types are consequently specified according to the EMI frequency ranges which are the source of the actual signal degradation and the operating frequency of the affected device. Certain electrical circuit criteria are also germane to filter selection, including:

- Capacitance Value
- Working Voltage
- Surge Voltage
- Dielectric Withstand Voltage
- Insulation Resistance
- Transient Protection

Filter connectors appropriate for use in applications such as those referenced above are broadly identified as 'low-pass' filters (i.e. they let low frequency signals pass through and attenuate higher frequencies). The attenuation curve can

COMMON FILTER CONNECTOR TYPES

Glenair supplies filter connectors in the following electrical configurations: C, L-C, C-L, and Pi. The following general values may be used in type selection: Single element filter connectors sporting either a single capacitor or inductor yield an insertion loss characteristic of 20dB per decade, dual element filters (capacitor plus an inductor) 40dB per decade, and triple element filters 60dB per decade. Selection is based primarily on source and load impedances but may also be influenced by the level of attenuation required at various frequencies. Please consult the factory for assistance in evaluating insertion loss values.

C Filter

Single capacitor with low self inductance. This configuration is generally used to attenuate high frequency signals. The simple design allows high-frequency EMI to discharge to ground via the surrounding electromagnetic field.

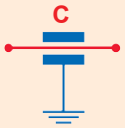

L-C or C-L Filter

Single capacitor combined with an inductive element. It is commonly used in a circuit with a both a low impedance source and a high impedance load or a low impedance load and a high impedance source. The inductive element should face the low impedance.

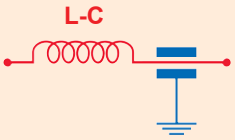

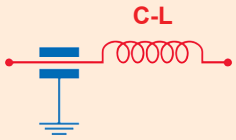

Pi Filter

Dual capacitors with a single inductive element positioned between them. The Pi filter provides exceptional high-frequency performance due to its sharper rolloff and is typically used when both source and load impedances are high.

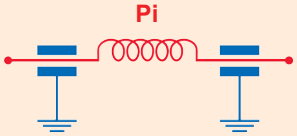

© 2010 Glenair, Inc.

be shaped using different filter types (different configurations of capacitors and inductors). These types include: Pi Filter, L-C or C-L Filter, and C Filter. These filter connector types are characterized by their relative abilities to filter noise according to capacitance, voltage values and load impedances. The simplest design is the "C", which consists of a single capacitor inserted between the signal line and ground.

While most EMI filter connectors can be used in a working temperature environment from -55° to 125° C, selected designs are optimized for higher operating temperatures. Hermetic filter connectors provide the ultimate protection. The hermetic glass fused design protects the filter assembly while maintaining very low leakage rates.

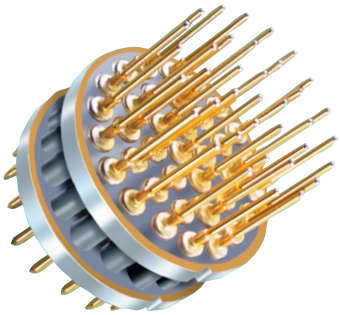

A multiway planar array filter device, assembled with its ferrite elements and connector contacts, ready for insertion into the connector shell. The flexible design allows for different capacitive values on individual pins as well as the integration of hybrid contacts such as optical termini.

Prior to shipping a filtered connector, Glenair offers extensive testing, qualification and burn-in options. Tests range from a simple capacitance (C), insulation resistance (IR), and dielectric withstanding voltage (DWV), to more elaborate options such as RF insertion loss, dissipation factor, Zener/TVS diode test, ground resistance, voltage conditioning and thermal shock.

The Glenair factory, provided with the system attenuation and frequency values, relevant electrical specifications, and connector configuration details, can design an effective filter device for every application (to get started, use the checklist found in the filter connector section of this catalog). In addition to the MIL-DTL-38999 type filter products cataloged in this book, Glenair is able to supply filter technology in virtually any connector package including our own Series 80 "Mighty Mouse," Mil-C-24308, and MIL-DTL-83513 products. Hybrid electrical/optical filter connectors and hermetic filter designs are a specialty.

Multilayer Ceramic Planar Capacitor Arrays

Planar, multi-layer ceramic capacitive filters offer reduced size and improved performance compared to discrete discoidal or tubular capacitors. Planar array filter devices have the advantage, especially when compared to capacitive filters integrated at the circuit board level, of being bidirectionally effective at attenuating unwanted noise travelling into and out of equipment enclosures.

As mentioned, the planar array can be designed with different capacitive values on individual pins, and pin groupings, and can also be selectively equipped with surge protection diodes. The ability to accommodate such Transient Voltage Suppressions (TVS) diodes to protect against voltage spikes from transient sources such as EMP, lightning or Electrostatic Discharge (ESD) is an additional strength of the planar array design.

The planar array package can also easily accommodate ferrite elements to add inductance to the filter device. For these reasons and more, the planar array is the most common filter type specified in military aerospace and other high-performance applications. The planar array consists of multiple layers of ceramic dielectric separated by individual sheets of a ceramic tape material screen-printed with a pattern of metal electrodes. The exact configuration of the electrodes—their combined capacitance values, positions vis-a-vis individual contacts, selective grounding to the connector shell, etc.—determines the EMI attenuation properties of the filter device. After the layer-cake of dielectric materials and conductive elements is assembled, it is fired at high temperature to create a unified, monolithic structure. The planar array is fabricated such that the capacitor positions align exactly to the pin layout positions of the connector. When combined with inductive

© 2010 Glenair, Inc.

ferrite elements, TVS diodes or other special circuitry, the final assembly is ready for insertion into the connector shell. The incorporation of filter elements into a standard cylindrical or rectangular connector will necessarily increase the overall length of the package. The extra real estate is usually added to the inside-the-box (non-mating) side of the connector receptacle. Another approach is to attach a connector adapter, or go-between, outfitted with the filter device, to the connector plug. This approach has the advantage of not requiring any dimensional changes in box design or receptacle connector package.

Often, custom-configured planar arrays, with unique capacitive elements and values, are required to effectively address complex EMI problems such as might be encountered in an avionics bay or in the body of a missile. But many EMI problems can be satisfactorily addressed with standard catalog product designs. As critical EMI problems are often discovered late in the development process—perhaps only after equipment has been installed for use—it is critical that both standard catalog products as well as non-standard designs are delivered with the fastest possible turnaround. Glenair is committed to meeting the most aggressive delivery requirements for planar array type filter connectors.

Glenair can apply a broad range of custom shell configurations, filter values, TVS technologies—even hybrid fiber optic contacts—into any MIL-DTL-38999 type connector package, including bulkhead feed-thrus and connector savers.

Insertion Loss Evaluation

Insertion loss is an important specification to consider in the selection of filter connectors. Insertion loss is a measure of the degradation experienced by a signal when a device, such as a connector, is inserted into the transmission path.

When a filter element performs its job of stripping signal noise from a transmission line, it may attenuate a portion of the desired signal as well. Measured in decibels (dB), insertion loss should be minimized in sensitive electronic systems which may operate at extremely low current levels. Typically, some amount of insertion loss is considered acceptable to accomplish the necessary signal selectivity, since the signal can always be re-amplified post-filtering. However, in many applications, too large a loss may ultimately result in the unacceptable degradation of system performance.

The evaluation of insertion loss is performed over a specific frequency range—i.e., a spectrum that extends from one limiting frequency to another. The intent being to measure signal degradation for each filter type across the actual operating frequencies of the equipment under consideration. Note that each filter type may yield different (theoretical and actual) insertion loss values depending on the specific capacitance and inductance [pF] ratings of the filter elements. Effective EMI/EMP filtering is, therefore, a balance between the purposeful attenuation of signal noise and the unfortunate degradation of signal strength—both conditions directly attributable to the insertion of the filter device into the system.

Sensible EMC design should, as a consequence, always incorporate conventional grounding and shielding of interconnect cabling and equipment housings in anticipation of unexpected EMI problems. The tables on the opposite page explain predictable insertion loss [dB] for each filter type (C, L, and Pi), at the available capacitance ratings [pF] across a common frequency range [MHz].

© 2010 Glenair, Inc.

C

INSERTION LOSS

Frequency	Insertion Loss, dB Minimum, 25°C						
	A	B	C	D	E	F	G
1 MHz	6	5	3	–	–	–	–
10 MHz	24	23	16	8	4	–	–
100 MHz	41	39	35	28	21	10	5
500 -1000 MHz	50	49	46	41	34	23	17

CAPACITANCE

Filter Class	Capacitance
X	80000 – 120000 [pF]
Y	40000 – 60000 [pF]
Z	30000 – 45000 [pF]
A	19000 – 28000 [pF]
B	16000 – 22500 [pF]
C	9000 – 16500 [pF]
D	4000 – 6000 [pF]
E	1650 – 2500 [pF]
F	400 – 650 [pF]
G	200 – 300 [pF]

Pi

INSERTION LOSS

Frequency	Insertion Loss, dB Minimum, 25°C						
	A	B	C	D	E	F	G
1 MHz	10	8	5	1	–	–	–
10 MHz	40	35	25	14	8	2	0.8
100 MHz	62	60	57	50	40	15	13
500 - 1000 MHz	66	62	60	58	52	32	22

CAPACITANCE

Filter Class	Capacitance
X	1600000 – 240000 [pF]
Y	80000 – 120000 [pF]
Z	60000 – 90000 [pF]
A	38000 – 56000 [pF]
B	32000 – 45000 [pF]
C	18000 – 33000 [pF]
D	8000 – 12000 [pF]
E	3300 – 5000 [pF]
F	800 – 1300 [pF]
G	400 – 600 [pF]

APPLICATION NOTES

1. Standard voltage rating is 500 V DWV.
2. Insertion loss values quoted are for 50Ω impedance and no load condition.
3. Classes X, Y and Z are 250 V DWV. Consult factory for additional information.
4. Some shell configurations may require extra length for classes X, Y and Z.

© 2010 Glenair, Inc.

GLENAIR, INC. • 1211 AIR WAY • GLENDALE, CA 91201-2497 • 818-247-6000 • FAX 818-500-9912
www.glenair.com E-Mail: sales@glenair.com

MIL-DTL-38999 Type Filter Connectors
Overview

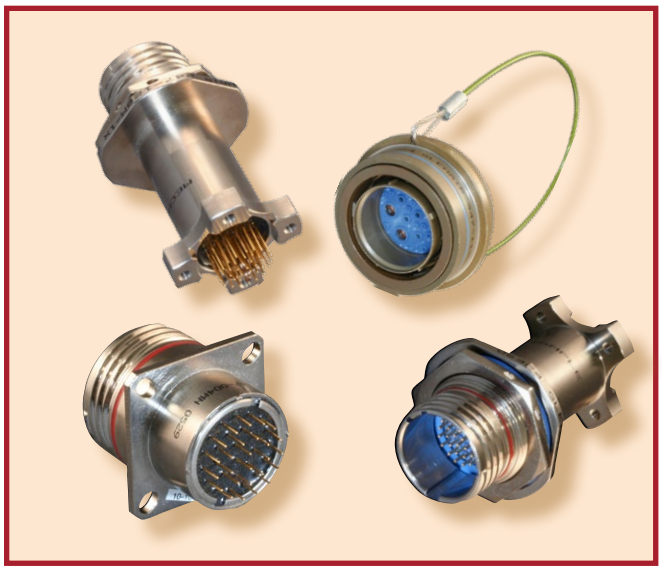

Custom Options in Filtered Connectors

Glenair MIL-DTL-38999 type filter connector designs may be optimized for use in a wide range of application environments including avionic systems, down-hole drilling and logging devices, network-centric ground warfare systems, and missile and satellite/space applications. Common electrical customizations include unique capacitance values on individual lines, electrostatic discharge designs, transient voltage suppression diodes, grounded holes and feed-throughs, as well as the incorporation of customer-specified filter architectures including Pi, C, L-C, C-L and T configurations.

Non-standard packaging options in EMI/EMP filter connectors include:

- Hybrid Fiber Optic/Electrical Contacts
- Dual-Flange PCB Mount Designs
- Composite Thermoplastic Shell Materials
- Variable Length PCB Tails
- Piggy-Back Crimp Contacts
- EMI Grounding Fingers and Gaskets
- In-Line, Feed-Through, Plug and Other Shell Styles

EMP and Transient Voltage Suppression

Electromagnetic Pulse (EMP) refers to intense radio frequency pulses produced by nuclear explosions at high altitudes. Other names for this phenomenon are Nuclear EMP (NEMP), and High-Altitude EMP (HEMP). Like other forms of electromagnetic interference, EMP can have a destructive effect on sensitive electronic devices, if the EMP grounds to an unshielded cable and passes into the electronic device.

EMP hardened equipment is designed to protect vital communications at a time when unhardened devices are likely to fail. Thus it is standard for many military applications to proactively protect certain devices from EMP. This is accomplished, in part, by the integration of Transient Voltage Suppression technologies into the connectors that service the device.

Transient Voltage Suppression (TVS) technologies are designed to shunt voltage transients directly to ground before such surges can damage sensitive electronic equipment. Individual TVS diodes as well as diode modules may be incorporated directly into the filter connector package to provide optimal protection for either individual contacts or groups of contacts without significant increases in connector size or weight. Individual circuit protection diodes and diode modules are available for all connector types and are routinely stocked by Glenair to reduce lead-times. Individual diodes and modules may be screened and tested prior to assembly to ensure reliable performance. Field maintenance and repair of damaged diodes is also possible as both individual diodes and diode modules are easily removed from the connector package. RTCA DO-160 and other electrical performance standards now define acceptable benchmarks for withstanding electromagnetic pulse, lightning strike, or other induced voltage surges in high-reliability systems. Glenair designs all TVS equipped filter connectors to conform to the RTCA DO-160 standard.

© 2010 Glenair, Inc.

Composite Connectors and Lightning Strike

Composite thermoplastic materials, such as the 30% glass filled polyetherimide (PEI) used in Glenair's MIL-DTL-38999 Series II Wall Mount Receptacle Connector have been tested for mechanical and electrical survivability to direct and indirect lightning strike. At issue is the ability of the composite connector shell to maintain its electrical continuity in the event of an intense voltage surge resulting from lightning strike.

In testing in accordance with MIL-STD-1344, items are subjected to waveform 1 and 5B using a high current generator. Items must remain functional without degradation of the unit's electrical performance, including filtering elements and TVS diodes and modules. Waveform 1 and 5B are applied starting at 3Ka increasing to 20Ka checking continuity measurements at set intervals. Waveform 1 is additionally subjected to an oscillatory wave starting at 30Ka and increasing in 10Ka steps until failure in continuity is measured.

While larger composite connector shell sizes (12 to 24) conform to MIL-STD-1344, smaller sizes (8 and 10) fail the test. Customers should select alternative materials, aluminum or stainless steel, when specifying small connector shell sizes in applications subject to lightning strike.

Glenair composite connectors and backshell are tested IAW MIL-STD-1344 lightning strike.

Soldering

Our filter connector engineers are frequently asked about any special handling procedures that are required when soldering PC Tail and Solder-cup contacts. At issue is the potential to damage filter elements due to the high heat of the soldering process. The short answer is that any trained and qualified operator can complete the operation without any special precautions. While it certainly can't hurt to take some basic precautions such as preheating the connector or utilizing a heat sink on individual contacts, our tests have revealed that, under normal conditions, the temperature of the ceramic filter array is not radically raised during solder termination of the contacts. Even in tests where we used a solder iron temperature of 350°C and an extremely long 'touch time' of 90 seconds, no adverse effects were observed. In fact, temperature at the ceramic remained well below 100°C at all times.

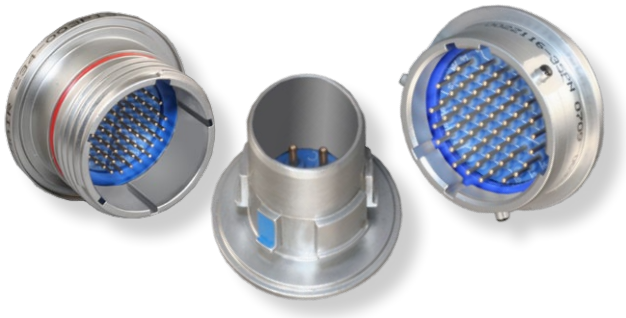

Hermetic Filter Connectors

Hermetic class EMI/EMP filter connectors are available throughout our complete range of MIL-DTL-38999 type filter connector products in both Pi and C from 400 pF to 56000 pF. Select either class H2 (stainless steel, electroless nickel), or class XM (composite, electroless nickel).

Hermetic connectors with EMI/EMP filtering are specified for applications as divergent as submarines, orbiting satellites, oil-patch logging equipment or medical devices that require both filtering elements and hermeticity. In addition to their EMI management function, the connectors are deployed to resist moisture ingress in

© 2010 Glenair, Inc.

underground applications and to withstand pressure differentials in vacuum chambers, laboratory equipment and commercial and military aircraft. Hermetic filter connectors are constructed from a core component-set that includes the connector shell, the planar array filtering device, a vitreous glass insert and the necessary interfacial sealing.

Shells may be machined from stainless steel or Kovar®, an iron-nickel-cobalt alloy with a coefficient of expansion closely balanced to the glass inserts. Contacts used in hermetic connectors must be fabricated from high-grade materials that can withstand high-heat, and bond effectively to the vitreous glass seal.

Glenair offers both standard hermetic/filter products compatible with standard MIL-DTL-38999 plugs as well as non-standard designs with unique filter values or voltage suppression technologies. Our goal is to always provide the fastest turnaround in the industry. Please consult the factory for unique packaging requirements.

Filter Module Elements

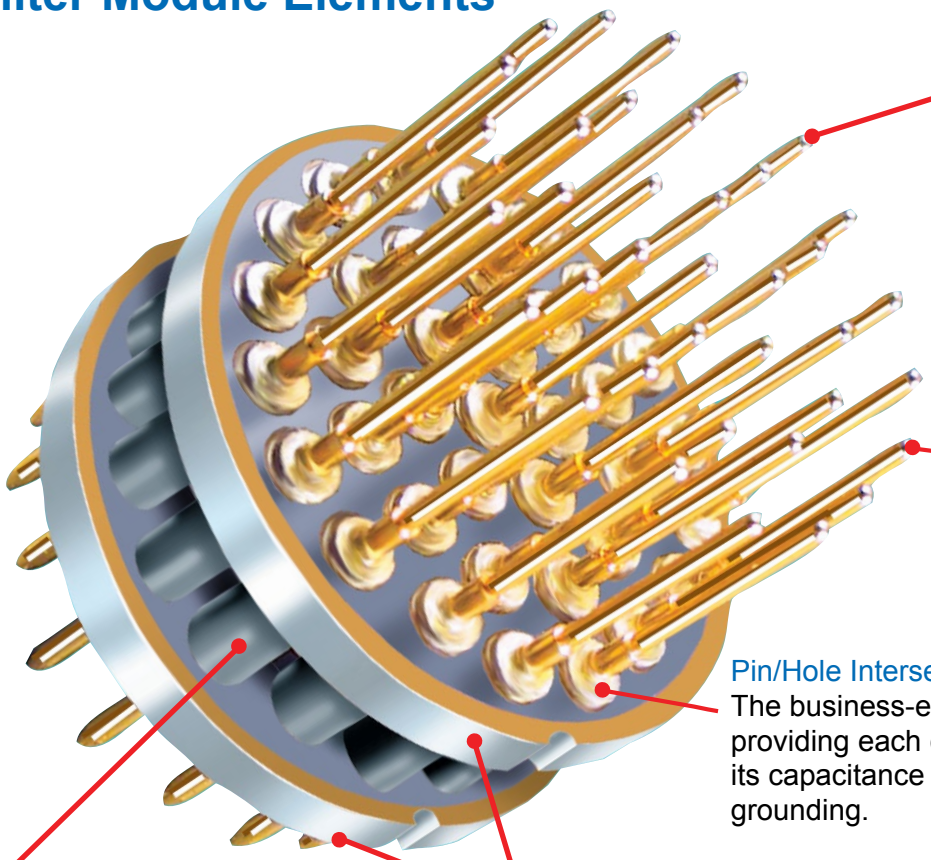

Contact Types:
Choose from Solder Cup, PC Tail or Piggy-Back Crimp (Consult Factory for PC Tail Length Options).

Contact Material:
Gold Plated Beryllium Copper Alloy.

Pin/Hole Intersection:
The business-end of the filter, providing each contact with its capacitance value and grounding.

Inductors:
Ferrite Beads to provide inductance and increase insertion loss.

Multilayer Ceramic Planar Array: Containing a network of capacitors, feedthrus and ground lines.

© 2010 Glenair, Inc.

MIL-DTL-38999 Connectors for Space Flight

Nonmetallic materials such as rubber, plastic, adhesives and potting compounds can give off gasses when subjected to a vacuum or high heat. The space industry has adopted a standardized test procedure, ASTM E 595, to evaluate outgassing properties of products that contain polymer materials. In the ASTM test, material samples are heated to 125° C at a vacuum of 5 X 10^{-5} torr for 24 hours. The test sample is then weighed to calculate the Total Mass Loss (TML), which may not exceed 1.00% of the total initial mass. Likewise the quantity of outgassed matter is weighed to determine the Collected Volatile Condensable Material (CVCM), which may not exceed 0.10% of the original specimen mass.

For space grade applications, Glenair is able to offer both an 8 hour 400° bakeout process as well as a 24 hour 125° thermal vacuum outgassing process on connector products that must conform to NASA screening or other outgassing standards. Our experience has been that the simpler bakeout process is more than adequate to meet the ASTM E 595 benchmark of 1.00% TML and 0.10% CVCM.

Glenair is well versed in supplying connector products that are optimized for use in space grade applications, and we supply MIL-DTL-38999 type compliant to EEE-INST-002, Table 2G, the recognized standard for space grade connectors. Section C2 “Connectors and Contacts” of NASA EEE-INST-002 provides guidelines for materials used in connectors for space flight applications: Aluminum is a preferred material for connector components, and electroless nickel is the preferred finish. Beryllium copper is a preferred material for contacts. 50 microinch minimum gold plating is the preferred contact finish. LCP is a preferred material for dielectric insulating materials. Specify “M” for aluminum shells with electroless nickel finish.

OUTGASSING PROPERTIES OF MATERIALS USED IN MIL-DTL-38999 CONNECTORS

Component	Material	TML %	TCVML %	Test Reference
Front and Rear Insulator	Liquid Crystal Polymer Vectra C130	0.03	0.0	NASA Test # GSC17478
Rear Grommet Interfacial Seal Peripheral Seal	Blended fluorosilicone/silicone elastomer, 30% silicone per ZZ-R-765, 70% fluorosilicone per MIL-R-25988	0.48	0.14	Glenair testing conducted at NuSil Technology 02/27/2001
Front-To-Rear Insulator Bonding Material	Eccobond 104 A/B	0.52	0.08	Emerson & Cuming Data Sheet
Insulator-to-Rubber Bonding Material	DC3145 RTV, per MIL-A-46146	1.74	0.90	NASA Test GSFC0191
Coupling Nut Retainer	Torlon® 4203L	1.88	0.01	Glenair Test at NuSil Technology 03-12-2003
Coupling Nut Epoxy	Hysol C9-4215	0.48	0.01	Glenair Test
White Epoxy Ink for Silk-screening	Markem 7224 White	0.49	0.03	NASA Test #GSC19899
Potting Compound, Solder Cup and PC Tail Connectors	Hysol C9-4215	0.48	0.01	Glenair Test
Potting Compound, Filter Receptacles	Stycast epoxy, 2850FT/Catalyst 11	0.29	0.02	Mfgr Data Sheet

© 2010 Glenair, Inc.

GLENAIR, INC. • 1211 AIR WAY • GLENDALE, CA 91201-2497 • 818-247-6000 • FAX 818-500-9912
www.glenair.com E-Mail: sales@glenair.com

MIL-DTL-38999 Connectors for Space Flight

1. Fluorosilicone rubber components such as O-rings and grommets exceed NASA outgassing limits.
2. NASA recommends outgassing processing to reduce outgassing to acceptable levels.
3. An inexpensive oven bakeout has better results than the more costly thermal vacuum outgassing. The higher temperature of the oven bakeout is more effective at removing volatile materials. However, both methods assure compliance with outgassing limits.
4. Glenair Mod 429 codes provide an easy ordering solution, whatever the outgassing option. Spacecraft designers generally avoid the use of ferromagnetic materials, which can become magnetized and can interfere with sensitive instruments. Aluminum shell connectors have a maximum permeability of 2 mu. Hermetic connector pins are iron alloy, a highly magnetic material.
5. Space programs sometimes need cryogenic connectors capable of withstanding temperatures as low as -270° C. D38999 connectors are rated to -65° C. Glenair does not have data to validate these connectors for cryogenic applications. EEE-INST-002 states "...experience has proven it is possible for (non-certified) connector types to be used successfully at cryogenic temperatures. It is recommended that connector samples should be subjected to five cycles of cryogenic temperature...(followed by examination for cracks and DWV)".

MIL-DTL-38999 CONNECTOR MATERIALS APPROVED FOR SPACE FLIGHT

Component	Material	Notes
Shells, Coupling Nuts, Jam Nuts	Aluminum alloy 6061 per ASTM B211, electroless nickel plated	Approved for Space Flight
Rigid Insulators	Glass-filled liquid crystal polymer (LCP) in accordance with MIL-M-24519, Type GLP-30F	Approved for Space Flight
Contact Retention Clip	Beryllium copper, heat-treated, unplated	Approved for Space Flight
Grommet, Peripheral Seal, Interfacial Seal, O-ring	Blended fluorosilicone/silicone elastomer, 30% silicone per ZZ-R-765, 70% fluorosilicone per MIL-R-25988	Requires outgassing processing
Hermetic Insert	Vitreous glass	Approved for Space Flight
Pin Contact	Beryllium copper alloy per ASTM B197, 50 microinches gold plated per ASTM B488 Type 3 Code C Class 1,27 over nickel plate per QQ-N-290 Class 2, 50-100 microinches	Approved for Space Flight
Pin Contact, Hermetic	Nickel-iron alloy per ASTM F30 (Alloy 52),50 microinches gold plated per ASTM B488 Type 3 Code C Class 1,27 over nickel plate per QQ-N-290 Class 2, 50-100 microinches	Ferromagnetic material.
Socket Contact	Beryllium copper alloy per ASTM B197, 50 microinches gold plated per ASTM B488 Type 3 Code C Class 1,27 over nickel plate per QQ-N-290 Class 2, 50-100 microinches.	Approved for Space Flight
Socket Contact Hood	Stainless steel, passivated per AMS-QQ-P-35	Approved for Space Flight
Adhesives	RTV and epoxies (see following table for outgassing info)	Requires outgassing processing
Potting Compound, PCB and Solder Cup Versions	Environmental and Hermetic Connectors: Stycast 2651/Catalyst 9 epoxy encapsulant. Filter Connectors: Stycast 2850FT/Catalyst 11 thermally conductive epoxy encapsulant.	Approved for Space Flight
Filter Element	Multilayer Ceramic Planar Array, ferrite inductors	Approved for Space Flight

© 2010 Glenair, Inc.

MIL-DTL-38999
Connector Performance Specifications

Test	Performance Specifications
Dielectric Withstanding Voltage	*(meets MIL-C-38999, paragraph 3.14)* Test voltage at sea level — 1300 Volts AC (rms). Wired, assembled, unmated connectors withstand the following: 550 VAC (rms) @ 50,000 ft. 350 VAC (rms) @ 70,000 ft. 200 VAC (rms) @ 100,000 ft.
Insulation Resistance	*(meets MIL-C-38999, paragraph 3.13)* Unmated connectors shall be tested as specified in **test method EIA-364-21** 5000 megohms min. at 25° C
Supported Wire Size	*(meets MIL-DTL-38999, paragraph 3.4.3.1)*

Contact Size	Wire Gauge
22D	#22 - #28
20	#20 - #24
16	#16 - #20
12	#12 - #14
10	#10 - #12

EMI Shielding

(meets MIL-DTL-38999, paragraph 3.31)
Effective over a range of 100 MHz to 10 GHz with a minimum 50dB effectiveness at 10GHz, in accordance with test method EIA-364-10

Frequency MHz	Attenuation Minimum dB		
	Series I	*Series II*	*Series III and IV*
100	90	65	90
200	88	60	88
300	88	55	88
400	87	55	87
800	85	45	85
1,000	85	45	85
1,500	69	—	76
2,000	65	—	70
3,000	61	—	69
4,000	58	—	68
6,000	55	—	66
10,000	50	—	65

Thermal Shock

(meets MIL-C-38999, paragraph 3.7)
After cycling the connector between -65° C and +175° C, it will meet all applicable electrical and mechanical requirements.

© 2010 Glenair, Inc.

GLENAIR, INC. • 1211 AIR WAY • GLENDALE, CA 91201-2497 • 818-247-6000 • FAX 818-500-9912
www.glenair.com E-Mail: sales@glenair.com

MIL-DTL-38999
Connector Performance Specifications

Test	Performance Specifications
Physical Shock	*(meets MIL-C-38999, paragraph 3.27)* No loosening of parts, cracking or other deleterious results hindering further part operation after 300 G's in each of 3 mutually perpendicular planes.
Fluid Compatibility	*(meets MIL-DTL-38999, paragraph 3.33)* Designed to function in all fluids encountered in any modern military or aerospace environment
Fluid Immersion	*(meets MIL-DTL-38999, paragraph 3.31)*

Frequency (MHz)	50Leakage Attenuation Minimum (dB)
100	90
200	88
300	87
400	85
800	85
1,000	85
1,500	69
2,000	65
3,000	61
4,000	58
6,000	55
10,000	50

High Impact Shock	*(meets MIL-C-38999, paragraph 3.27)* Mated connectors, wired with MIL-C-915/60 or /63 cable and equipped with straight environmentally sealed backshells, withstand high impact shock per MIL-S-901.
Vibration	*(meets MIL-C-38999, paragraph 3.26)* There shall be no electrical discontinuity and there shall be no disengagement of the mated connectors, backing off of the coupling mechanism, evidence of cracking, breaking, or loosening of parts.
Fungus	*(meets MIL-C-38999, paragraph 4.2.2)* Materials used in the construction of these connectors shall be fungus inert per certification of method 508.4 of MIL-STD-810
Corrosion	*(meets MIL-C-38999, paragraph 3.16)* When tested in accordance with EIA-364-26, meets appropriate electrical and mechanical requirements and shows no exposure of base metal after 500 hours of salt spray
Mating / Unmating Forces	*(meets MIL-C-38999, paragraph 3.10)* The coupling torque for mating and unmating of the counterpart connectors and protective covers shall meet the requirements of the table shown below.

© 2010 Glenair, Inc.

GLENAIR, INC. • 1211 AIR WAY • GLENDALE, CA 91201-2497 • 818-247-6000 • FAX 818-500-9912
www.glenair.com E-Mail: sales@glenair.com

MIL-DTL-38999
Connector Performance Specifications

Test	Performance Specifications
Durability	*(meets MIL-C-38999, paragraph 3.11)* No electrical or mechanical defects after 500 cycles of engagement and disengagement
Insert Retention	*(meets MIL-C-38999, paragraph 3.15)* Unmated connectors shall retain their inserts in their proper location in the shell and there shall be no evidence of cracking, breaking, separation from the shell, or loosening of parts.
Contact Retention	*(meets MIL-C-38999, paragraph 3.23)* The axial displacement of the contact shall not exceed .012 inch (0.30 mm). No damage to contacts or inserts shall result.
Coupling Pin Strength	*(meets MIL-C-38999, paragraph 3.20)* **Applicable to series I and II only** Bayonet coupling pins shall withstand a load of 50 +5, -0 pounds without displacement or perceptible loosening of coupling pins.
Contact Engagement and Disengagement Forces	*(meets MIL-C-38999, paragraph 3.16)* **Applicable to hermetic connectors with sockets only** Contact engagement and separating forces shall be within the limits specified in **SAE-AS39029.**
Resistance to Probe Damage	*(meets MIL-C-38999, paragraph 3.42)* **Applicable to hermetic connectors with sockets only** Contacts shall withstand the bending moment and depth of test probe insertion without evidence of damage that would interfere with the mechanical or electrical performance.
EMI Ground Spring Forces	*(meets MIL-C-38999, paragraph 3.30)* The forces necessary to engage and separate EMI plugs with receptacle shells shall be within the values specified in the table shown below:

Shell size	Axial force for Series I, II, and III				Axial force for Series IV			
	Maximum Pounds	Minimum Newtons	Maximum Pounds	Minimum Newton	Pounds	Newtons	Pounds	Newtons
8/9	25	111	0.5	2	-	-	-	-
10/11	25	111	0.5	2	5	22.3	0.3	1.3
12/13	30	133	0.5	2	5	22.3	0.3	1.3
14/15	30	133	0.5	2	6	26.7	0.4	1.8
16/17	35	156	0.5	2	7	31.1	0.4	1.8
18/19	35	156	0.5	2	8	35.6	0.5	2.2
20/21	35	156	0.5	2	9	40	0.5	2.2
22/23	35	156	0.5	2	10	44.5	0.5	2.2
24/25	35	156	0.5	2	10	44.5	0.5	2.2

© 2010 Glenair, Inc.

GLENAIR, INC. • 1211 AIR WAY • GLENDALE, CA 91201-2497 • 818-247-6000 • FAX 818-500-9912
www.glenair.com E-Mail: sales@glenair.com

MIL-DTL-38999
Contact Performance Specifications

Test	Performance Specifications

Current Rating

(meets MIL-C-39029, paragraph 1.3.1)

Contact Size	Maximum Amps	
	Crimp	*Hermetic*
22D	5	3
20	7.5	5
16	13	10
12	23	17
10	33	24

Contact Millivolt Drop

Contact Size	Maximum Millivolt Drop	
	Crimp	*Hermetic*
22D	73	85
20	55	60
16	49	85
12	42	82
10	33	72

Contact Resistance at 25° C

(meets MIL-C-38999, paragraph 3.17)
Contacts in the mated condition shall meet the contact resistance requirements of the table shown below. Appropriate compensation may be made for resistance in the measured value which is due to an additional length of wire included in the measurement.

Class	Contact Size	Wire Size	Test Amperes	Millivolt Drop Maximum	
				Initial	After Conditioning
H, N and Y	12	12	17	85	100
	16	16	10	85	100
	20	20	5	60	75
	22D	22	3	85	95

MIL-DTL-38999 CONTACT MATERIALS AND SPECIFICATIONS

Component	Material	Notes
Pin Contact	Beryllium copper alloy per ASTM B197, 50 microinches gold plated per ASTM B488 Type 3 Code C Class 1,27 over nickel plate per QQ-N-290 Class 2, 50-100 microinches	Approved for Space Flight
Pin Contact, Hermetic	Nickel-iron alloy per ASTM F30 (Alloy 52),50 microinches gold plated per ASTM B488 Type 3 Code C Class 1,27 over nickel plate per QQ-N-290 Class 2, 50-100 microinches	Ferromagnetic material.
Socket Contact	Beryllium copper alloy per ASTM B197, 50 microinches gold plated per ASTM B488 Type 3 Code C Class 1,27 over nickel plate per QQ-N-290 Class 2, 50-100 microinches.	Approved for Space Flight
Socket Contact Hood	Stainless steel, passivated per AMS-QQ-P-35	Approved for Space Flight

© 2010 Glenair, Inc.

GLENAIR, INC. • 1211 AIR WAY • GLENDALE, CA 91201-2497 • 818-247-6000 • FAX 818-500-9912
www.glenair.com
E-Mail: sales@glenair.com

RoHS Compliant Plating Options for MIL-DTL-38999 Connectors and Accessories

The 30 May 2008 MIL-DTL-38999 Rev L specification provides guidance on the use of alternative parts with less hazardous or nonhazardous materials. In this regard, the specification provides for a number of alternative plating materials. Users are directed to select the least hazardous plating material that meets the form, fit and function requirements of their application.

Glenair would like to draw our customer's attention to two finish materials that conform to this guidance:

T – Environment resisting Nickel fluorocarbon polymer. Conductive Nickel with fluorocarbon polymer additives over a suitable underplate to withstand 500 hours of dynamic salt spray testing.

Z – Environment resisting Zinc nickel (conductive) in accordance with ASTM B841 over a suitable underplate to withstand 500 hours of dynamic salt spray testing.

These two plating solutions are both cadmium and hexavalent chromium free, which allows them to be defined as RoHS compliant parts. Here are some additional details on these two surface finishes:

Temperature Resistance: Class T - Nickel fluorocarbon polymer (Glenair's MT Ni-PTFE ***1,000 Hour Grey™*** finish) is rated from -65°C to +175°C. The Class Z - Zinc Nickel (Glenair's ZN finish) is rated from -65°C to +175°C.

Plating adhesion: When tested as specified in 4.5.5, there shall be no blistering, peeling, flaking or separation of plating or other damage detrimental to the operation of the connector.

Dissimilar metals and compatible couples: Both finishes satisfy prohibitions against dissimilar metal coupling as specified in MIL-STD-889.

Shell-to-shell conductivity (millivolts): Both finishes are rated at 2.5 millivolt drop potential.

Glenair Nickel-PTFE 1,000 Hour Grey™ RoHS Compliant Plating is Now Available for All Environmental Class D38999 Connector Products.

Sulfur Dioxide Resistance: Both finishes pass the requisite 336 hours resistance to Sulfur Dioxide.

Glenair is pleased to make these environmentally-friendly plating finishes available to our MIL-DTL-38999 customers. Both surface finishes provide outstanding mechanical, electrical and environmental performance and many be applied to both aluminum alloy, stainless steel as well as composite thermoplastic versions of our products, including connectors and accessories. Glenair is a leader in the advancement of alternative plating solutions and offers as broad a selection as any manufacturer in our industry.

© 2010 Glenair, Inc.

GLENAIR, INC. • 1211 AIR WAY • GLENDALE, CA 91201-2497 • 818-247-6000 • FAX 818-500-9912
www.glenair.com E-Mail: sales@glenair.com

MIL-DTL-38999 Series I, II, III and IV Qualified Hermetic Connectors

SECTION B TABLE OF CONTENTS

GLENAIR MIL-DTL-38999 SERIES I, II, III AND IV QUALIFIED HERMETIC CONNECTORS:

MIL-DTL-38999 QPL'd Hermetic Connector Product Features....B-1
MIL-DTL-38999 Series I, II, III and IV Hermetic Class Insert Arrangements....B-2
MIL-DTL-38999 Series I, II, III and IV Hermetic Class Layouts and Pin Counts....B-4
MIL-DTL-38999 Hermetic Class Material Specifications and Finishes....B-5
MS27469 Wall Mount Hermetic Receptacle, Series I....B-6
MS27470 Jam Nut Mount Hermetic Receptacle, Series I....B-8
MS27471 Solder Mount Hermetic Receptacle, Series I....B-10
MS27475 Wall Mount Hermetic Receptacle, Series II....B-12
MS27476 Box Mount Hermetic Receptacle, Series II....B-14
MS27477 Jam-Nut Mount Hermetic Receptacle, Series II....B-16
MS27478 Solder Mount Hermetic Receptacle, Series II....B-18
D38999/21 Box Mount Hermetic Receptacle, Series III....B-20
D38999/23 Jam Nut Mount Hermetic Receptacle, Series III....B-22
D38999/25 Solder Mount Hermetic Receptacle, Series III....B-24
D38999/27 Weld Mount Hermetic Receptacle, Series III....B-26
D38999/41 Box Mount Hermetic Receptacle, Series IV....B-28
D38999/43 Jam Nut Mount Hermetic Receptacle, Series IV....B-30
D38999/45 Solder Mount Hermetic Receptacle, Series IV....B-32
D38999/48 Weld Mount Hermetic Receptacle, Series IV....B-34
257-333 Jam Nut Hermetic Receptacle with Crimp Removable Socket Contacts, Series III....B-36

Series I

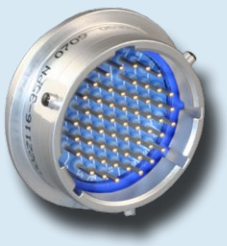

Series II

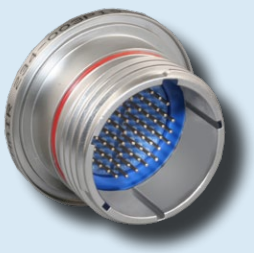

Series III

Series IV

The Full Range of MIL-DTL-38999 Series I, II, III and IV Hermetic Receptacles—*Plus Glenair Commercial Equivalents*

Product Applications

The MIL-DTL-38999 Series I, II, III and IV family of hermetic connectors are ideal for high-pressure/low-leakage applications in air, sea and space environments. Glenair is on the Qualified Product List (QPL) for all configurations of MIL-DTL-38999 Series I through IV pin and socket hermetic connectors. We also offer our D38999 type commercial part numbers for applications that do not require MS qualified products.

Materials

Glenair MIL-DTL-38999 Series I, II, III and IV Hermetic Connectors are made of stainless (CRES) or carbon steel (CRS), with glass insulators fused to the connector shell, and contacts meeting a leak rate of 1 X 10^{-6} cc/Helium per second. Maximum design flexibility is built into the Series I, II, III and IV Military Standard Hermetic Connectors – with a minimum of 2 to a maximum of 128 circuits per connector in a wide variety of contact arrangements IAW MIL-STD-1560. Fluorosilicone rubber interfacial and peripheral seals ensure positive sealing with plug connectors.

Nickel-iron alloy 52 gold-plated contacts, available in sizes 8, 10, 12, 16, 20 and 22D, depending on the layout chosen, offer a wide selection of insert arrangement options. Solder cup, feed through (PCB Flexprint) and eyelet contact styles are also available.

Same-Day Inventory

Because Glenair makes all its hermetic connectors in-house, including the machining of shells, molding of interfacial seals and firing of hermetic components, we can offer you outstanding availability on stock products and fast turnaround on special orders.

Same-Day Delivery on Most Common Shell Styles and Layouts

Full Range of D38999 Series I thru IV Pin and Socket Insert Arrangements

DSCC Approved QPL Hermetics

1 x 10^{-6} cc/Helium per Second Leakage Rate

CRES and CRS Shells with Vitreous Glass Sealing with All Standard Material Options

Jam Nut, Solder Mount, Wall Mount and Box Mount Options

Catalog contents—including part numbers, materials and dimensions—are accurate to the best of our ability when we go to print. Even so, customers are advised to consult the factory for the latest specifications, particularly to confirm critical dimensions such as connector lengths, threads, and so on. When errors or mistakes are brought to our attention, corrected content is posted immediately to www.glenair.com.

© 2010 Glenair, Inc. CAGE CODE 06324 Printed in U.S.A.

MIL-DTL-38999 Series I, II, III, and IV Hermetic Class Connectors Insert Arrangements (IAW MIL-STD-1560)

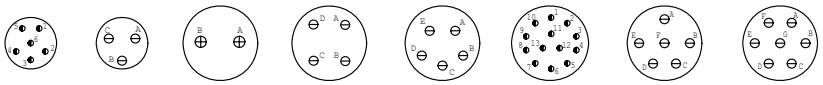

Series I	9-35	9-98	11-2	11-4	11-5	11-35	11-98	11-99
Series II	8-35	8-98	10-2	10-4	10-5	10-35	10-98	10-99
Series III	A35	A98	B2	B4	B5	B35	B98	B99
Series IV	---	---	---	---	B5	B35	B98	B99

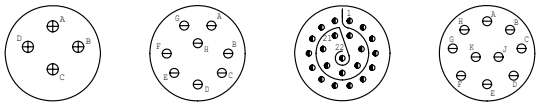

Series I	13-4	13-8	13-35	13-98
Series II	12-4	12-8	12-35	12-98
Series III	C4	C8	C35	C98
Series IV	C4	---	C35	C98

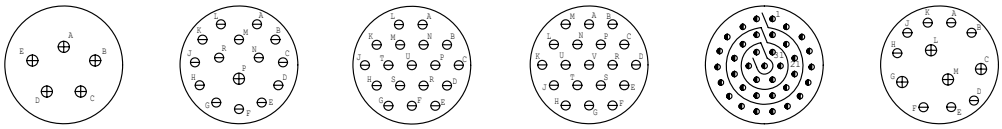

Series I	15-5	15-15	15-18	15-19	15-35	15-97
Series II	14-5	14-15	14-18	14-19	14-35	14-97
Series III	D5	D15	D18	D19	D35	D97
Series IV	D5	---	D18	D19	D35	D97

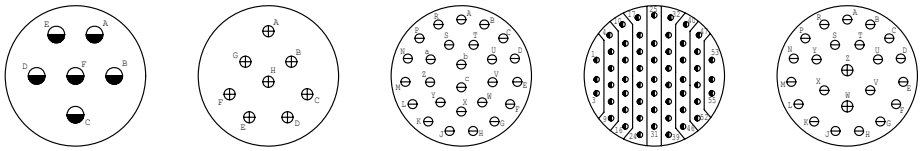

Series I	17-6	17-8	17-26	17-35	17-99
Series II	16-6	16-8	16-26	16-35	16-99
Series III	E6	E8	E26	E35	E99
Series IV	E6	E8	E26	E35	---

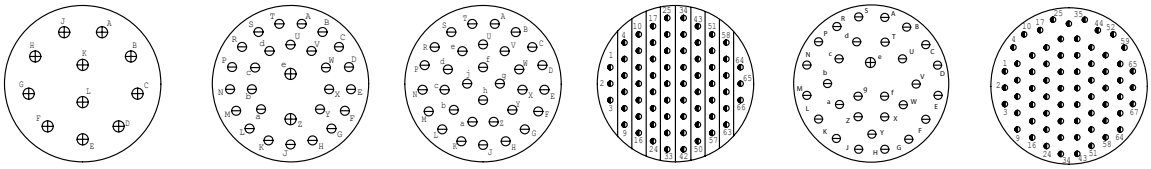

Series I	19-11	19-28	19-32	19-35	19-30	19-45
Series II	18-11	18-28	18-32	18-35	18-30	18-45
Series III	F11	F28	F32	F35	F30	F45
Series IV	F11	---	F32	F35	---	---

© 2010 Glenair, Inc.

MIL-DTL-38999 Series I, II, III, and IV Hermetic Class Connectors Insert Arrangements (IAW MIL-STD-1560)

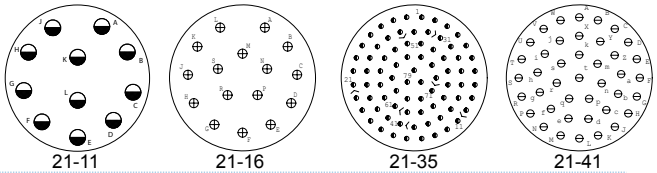

Series I	21-11	21-16	21-35	21-41
Series II	20-11	20-16	20-35	20-41
Series III, IV	G11, G11	G16, G16	G35, G35	G41, G41

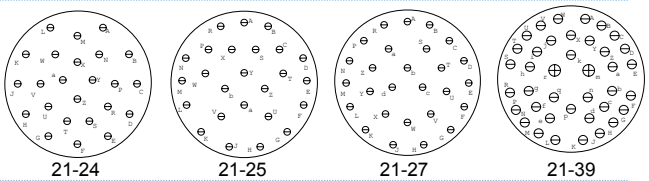

Series I	21-24	21-25	21-27	21-39
Series II	20-24	20-25	20-27	20-39
Series III, IV	G24, G24	G25, ---	G27, ---	G39, ---

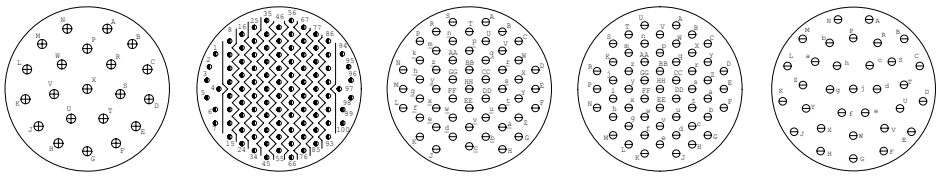

Series I	23-21	23-35	23-53	23-55	23-32
Series II	22-21	22-35	22-53	22-55	22-32
Series III, IV	H21, H21	H35, H35	H53, ---	H55, H55	H32, ---

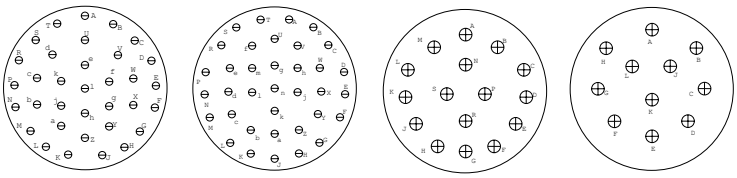

Series I	23-34	23-36	23-97	23-99
Series II	22-34	22-36	22-97	22-99
Series III, IV	H34, ---	H36, ---	H97, ---	H99, ---

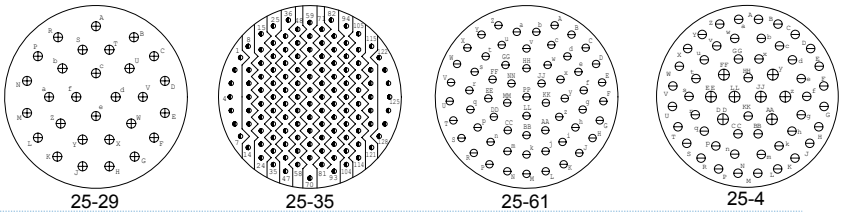

Series I	25-29	25-35	25-61	25-4
Series II	24-29	24-35	24-61	24-4
Series III, IV	J29, J29	J35, J35	J61, J61	J4, J4

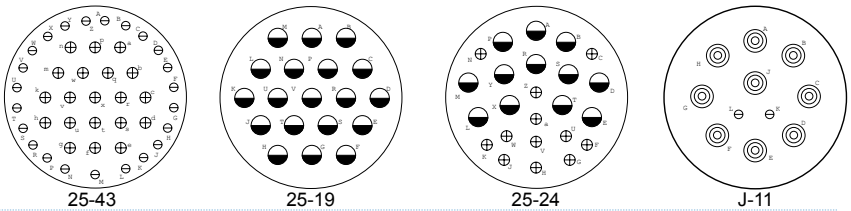

Series I	25-43	25-19	25-24	J-11
Series II	24-43	24-19	24-24	*(Series IV Only)*
Series III, IV	J43, J43	J19, J19	J24, J24	

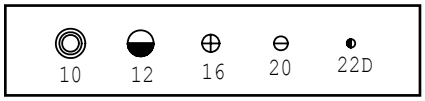

© 2010 Glenair, Inc.

GLENAIR, INC. • 1211 AIR WAY • GLENDALE, CA 91201-2497 • 818-247-6000 • FAX 818-500-9912
www.glenair.com
E-Mail: sales@glenair.com

Glenair®

MIL-DTL-38999 Series I, II, III, and IV Hermetic Class Connectors Layouts and Pin Counts

Shell Size and Insert Arrangements			Number of Pins			
MS Series I	MS Series II	D38999 Series III	22D	20	16	12
9-35	8-35	A35	6			
9-98	8-98	A98		3		
11-2	10-2	B2			2	
11-4	10-4	B4		4		
11-5	10-5	B5		5		
11-35	10-35	B35	13			
11-98	10-98	B98		6		
11-99	10-99	B99		7		
13-4	12-4	C4			4	
13-8	12-8	C8		8		
13-35	12-35	C35	22			
13-98	12-98	C98		10		
15-5	14-5	D5			5	
15-15	14-15	D15		14	1	
15-18	14-18	D18		18		
15-19	14-19	D19		19		
15-35	14-35	D35	37			
15-97	14-97	D97		8	4	
17-6	16-6	E6				6
17-8	16-8	E8			8	
17-26	16-26	E26		26		
17-35	16-35	E35	55			
17-99	16-99	E99		21	2	
19-11	18-11	F11			11	
19-28	18-28	F28		26	2	
19-30	18-30	F30		29	1	
19-32	18-32	F32		32		
19-35	18-35	F35	66			
19-45	18-45	F45	67			
21-11	20-11	G11				11
21-16	20-16	G16			16	
21-24	20-24	G24		24		
21-25	20-25	G25		25		
21-27	20-27	G27		27		
21-35	20-35	G35	79			
21-39	20-39	G39		37	2	
21-41	20-41	G41		41		
23-21	22-21	H21			21	
23-32	22-32	H32		32		
23-34	22-34	H34		34		
23-35	22-35	H35	100			
23-36	22-36	H36		36		
23-53	22-53	H53		53		
23-55	22-55	H55		55		
23-97	22-97	H97			16	
23-99	22-99	H99			11	
25-4	24-4	J4		48	8	
25-19	24-19	J19				19
25-24	24-24	J24			12	12
25-29	24-29	J29			29	
25-35	24-35	J35	128			
25-37	N/A	J37	37		37	16
25-43	24-43	J43		23	20	
25-61	24-61	J61		61		

Shell Size / Insert Arrangements	Number of Pins				
D38999 Series IV	22D	20	16	12	10
B5		5			
B35	13				
B98		6			
B99		7			
C4			4		
C35	22				
C98		10			
D5			5		
D18		18			
D19	37	19			
D35					
D97		8	4		
E6				6	
E8			8		
E26		26			
E35	55				
F11			11		
F32		32			
F35	66				
G11				11	
G16			16		
G35	79				
G41		41			
H21			21		
H35	100				
H55		55			
J4		48	8		
J11		2			9
J19				19	
J24			12	12	
J29			29		
J35	128				
J43		23	20		
J61		61			
J37			37		

© 2010 Glenair, Inc.

GLENAIR, INC. • 1211 AIR WAY • GLENDALE, CA 91201-2497 • 818-247-6000 • FAX 818-500-9912
www.glenair.com E-Mail: sales@glenair.com

TABLE I: HERMETIC CLASS MATERIALS

Shell, Barrel Coupling and Jam Nut (Hermetic)	Stainless steel per AMS-QQ-S-763
Shell, Barrel, Coupling Nut and Jam Nut (Hermetic)	Carbon Steel per ASTM-B545 or ASTM-B339
Front and Rear Insulators	Glass-filled liquid crystal polymer (LCP) in accordance with MIL-M-24519, Type GLP-30F
Grommet, Peripheral Seal and Interfacial Seal	Blended elastomer, 30% silicone per ZZ-R-765, 70% fluorosilicone per MIL-R-25988
Hermetic Insert	Vitreous glass
Pin Contact (Hermetic)	Nickel-iron alloy per ASTM F30 (Alloy 52),50 microinches gold plated per ASTM B488 Type 3 Code C Class 1,27 over nickel plate per QQ-N-290 Class 2, 50-100 microinches
Socket Contact (Hermetic)	Copper Alloy, Gold Plated IAW ASTM B488, Type 3, Code C
Adhesives	Silicone and epoxy
Potting Compound, PCB and Solder Cup Versions	Environmental and Hermetic Connectors: High-strength epoxy, Hysol EE4215. Filter Connectors: Stycast 2850FT/Catalyst 11 thermally conductive epoxy encapsulant.

TABLE II: HERMETIC CLASS FINISHES

Plating Code	Material	Finish	Specification
Glenair Commercial Equivalent Plating Codes			
Z1	Stainless Steel	Passivate	AMS-QQ-P-35
FT	Carbon Steel	Fused Tin Plate	ASTM-B545 or ASTM-B339
ZL	Stainless Steel	Electrodeposited Nickel	SAE-AMS-QQ-N-290, Class 2
MIL-DTL-38999 Plating Codes			
D	Carbon Steel	Fused Tin Plate	ASTM-B545 or ASTM-B339
E	Stainless Steel	Passivate	AMS-QQ-P-35
N	Stainless Steel	Electrodeposited Nickel	SAE-AMS-QQ-N-290, Class 2

© 2010 Glenair, Inc.

GLENAIR, INC. • 1211 AIR WAY • GLENDALE, CA 91201-2497 • 818-247-6000 • FAX 818-500-9912
www.glenair.com
E-Mail: sales@glenair.com

MS27469
Wall Mount Hermetic Receptacle
MIL-DTL-38999 Series I

How To Order: *MS*

Shell Style
MS27469 - Wall Mount, Series I

Connector Material / Finish
D - Carbon Steel - Fused Tin Finish
E - Stainless Steel - Passivate Finish
N - Stainless Steel - Nickel Finish

Contact Termination
P - Pin, Solder Cup
X - Pin, Eyelet
C - Pin, PCB Flex Feedthrough
S - Socket, Solder Cup
Z - Socket, Eyelet
D - Socket, PCB Flex Feedthrough

MS27469	Y	11	N	35	P	A

Class
Y- Hermetic

Shell Size
9,11,13,15,17,19,21,23,25

Insert Arrangement
MIL-DTL-38999 Series I Hermetic Inserts Per MIL-STD-1560; See Pages B-2 - B-4

Alternate Key Position
A, B, C, D (Omit for Normal)

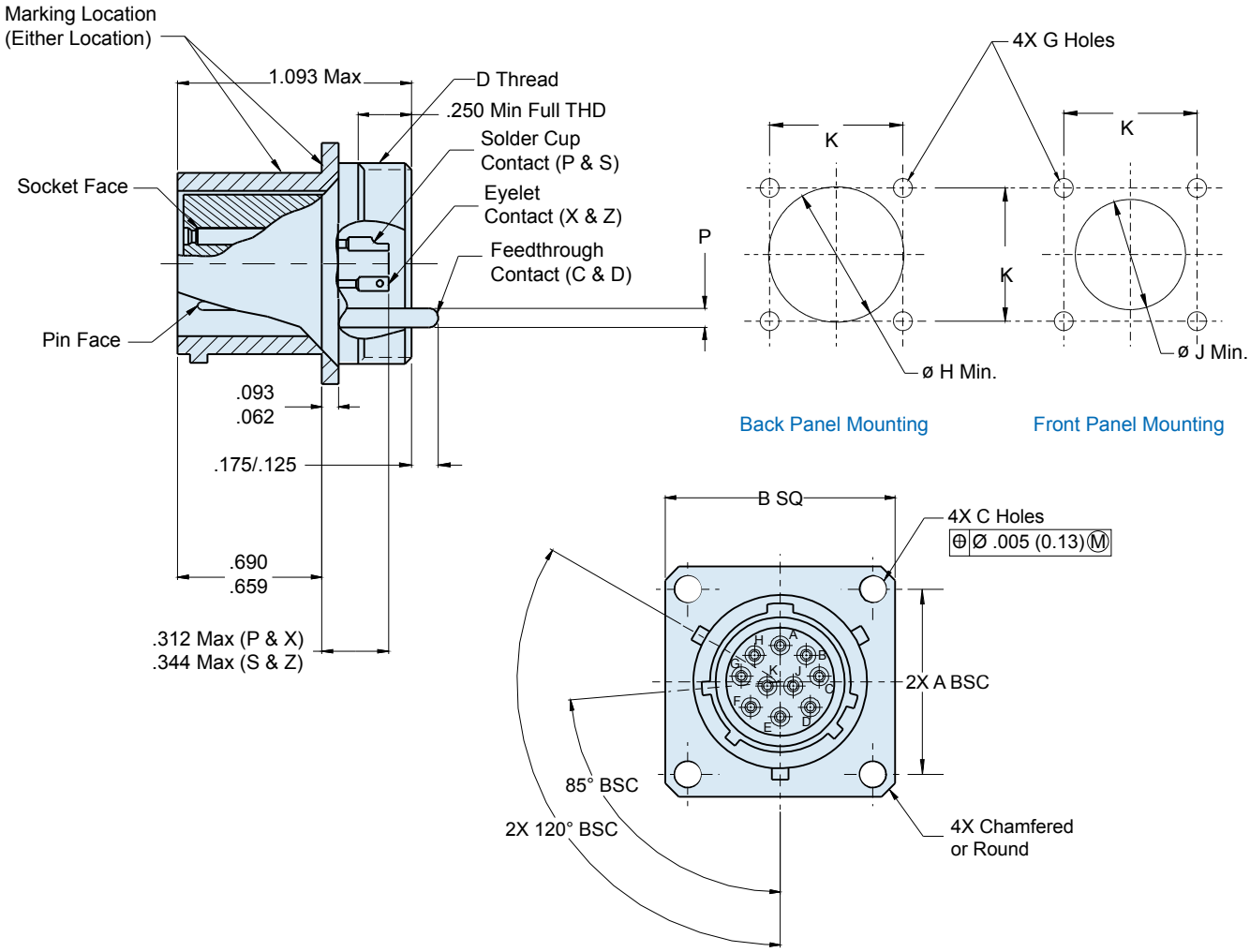

© 2010 Glenair, Inc. CAGE CODE 06324 Printed in U.S.A.

MS27469
Wall Mount Hermetic Receptacle
MIL-DTL-38999 Series I

How To Order: *Commercial*

231 - 100 - H0 Z1 11 - 35 P N

Connector Series
231 - Series I Type

Shell Style
H0 - Hermetic Wall Mount

Shell Size
09,11,13,15,17,19,21,23,25

Contact Termination
P - Pin, Solder Cup *S - Socket, Solder Cup*
X - Pin, Eyelet *Z - Socket, Eyelet*
C - Pin, PCB *D - Socket, PCB*

Connector Type
100 - Hermetic Receptacle

Connector Material / Finish
ZL - CRES, Nickel
Z1 - CRES, Passivated
FT - Carbon Steel, Fused Tin

Insert Arrangement
Per MIL-STD-1560;
See Pages B-2 - B-4

Alternate Key Position
A, B, C, D,
(*N* = Normal)

TABLE I: CONNECTOR DIMENSIONS

SHELL SIZE	A BSC	B SQ ±.016(0.4)	ø C HOLES	D THREADS
9/09	.719(18.3)	.938(23.8)	.133(3.4) .123(3.1)	.6875-24 UNEF-2A
11	.812(20.6)	1.031(26.2)	.133(3.4) .123(3.1)	.8125-20 UNEF-2A
13	.906(23.0)	1.125(28.6)	.133(3.4) .123(3.1)	.9375-20 UNEF-2A
15	.969(24.6)	1.219(31.0)	.133(3.4) .123(3.1)	1.0625-18 UNEF-2A
17	1.062(27.0)	1.312(33.3)	.133(3.4) .123(3.1)	1.1875-18 UNEF-2A
19	1.156(29.4)	1.438(36.5)	.133(3.4) .123(3.1)	1.3125-18 UNEF-2A
21	1.250(31.8)	1.562(39.7)	.133(3.4) .123(3.1)	1.4375-10 UNEF-2A
23	1.375(34.9)	1.688(42.9)	.157(4.0) .142(3.6)	1.5625-18 UNEF-2A
25	1.500(38.1)	1.812(46.0)	.157(4.0) .142(3.6)	1.6875-18 UNEF-2A

TABLE I (CONTINUED): CONNECTOR DIMENSIONS

SHELL SIZE	ø G HOLES ±.005(0.1)	ø H MIN	ø J MIN	K ±.005(0.1)
9/09	.128(3.3)	.656(16.7)	.516(13.1)	.719(18.3)
11	.128(3.3)	.781(19.8)	.625(15.9)	.812(20.6)
13	.128(3.3)	.921(23.4)	.750(19.1)	.906(23.0)
15	.128(3.3)	1.047(26.6)	.906(23.0)	.968(24.6)
17	.128(3.3)	1.218(30.9)	1.016(25.8)	1.062(27.0)
19	.128(3.3)	1.296(32.9)	1.142(29.0)	1.156(29.4)
21	.128(3.3)	1.421(36.1)	1.266(32.2)	1.250(31.8)
23	.154(3.9)	1.546(39.3)	1.375(34.9)	1.375(34.9)
25	.154(3.9)	1.672(42.5)	1.484(37.7)	1.500(38.1)

TABLE II: CONTACT SIZE

PRINTED CIRCUIT TAIL CONFIGURATIONS
CONTACT STYLE C AND D

SIZE 12 AND SIZE 16

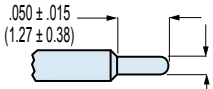

SIZE 22D AND SIZE 20 P

Contact Size	ø P
22D	.011 (0.28) .015 (0.38)
20	.024 (0.61) .028 (0.71)
16	.0635 (1.61) .0615 (1.56)
12	.095 (2.41) .093 (2.36)

© 2010 Glenair, Inc. CAGE CODE 06324 Printed in U.S.A.

MS27470
Jam Nut Mount Hermetic Receptacle
MIL-DTL-38999 Series I

How To Order: *MS*

Shell Style
MS27470 - Jam Nut Mount, Series I

Connector Material / Finish
D - Carbon Steel - Fused Tin Finish
E - Stainless Steel - Passivate Finish
N - Stainless Steel - Nickel Finish

Contact Termination
P - Pin, Solder Cup
X - Pin, Eyelet
C - Pin, PCB Flex Feedthrough
S - Socket, Solder Cup
Z - Socket, Eyelet
D - Socket, PCB Flex Feedthrough

MS27470 | Y | 11 | N | 35 | P | A

Class
Y- Hermetic

Shell Size
9,11,13,15,17,19,21,23,25

Insert Arrangement
MIL-DTL-38999 Series I Hermetic Inserts Per MIL-STD-1560; See Pages B-2 - B-4

Alternate Key Position
A, B, C, D (Omit for Normal)

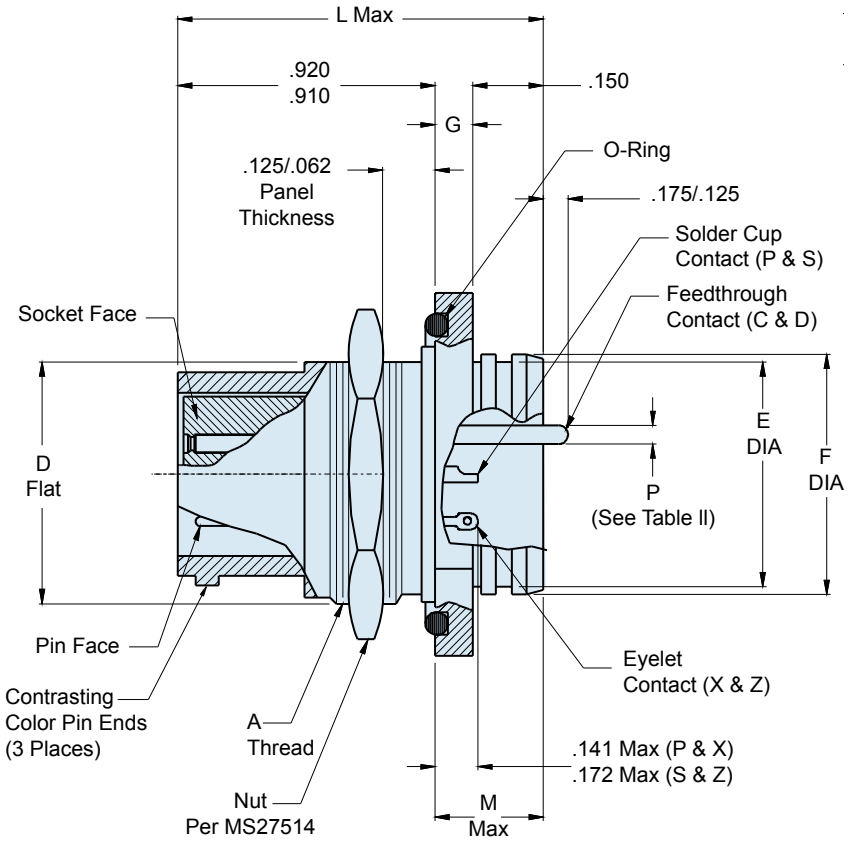

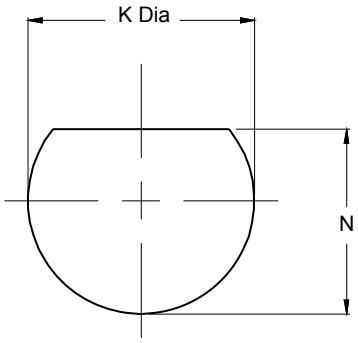

Recommended Panel Cut-Out

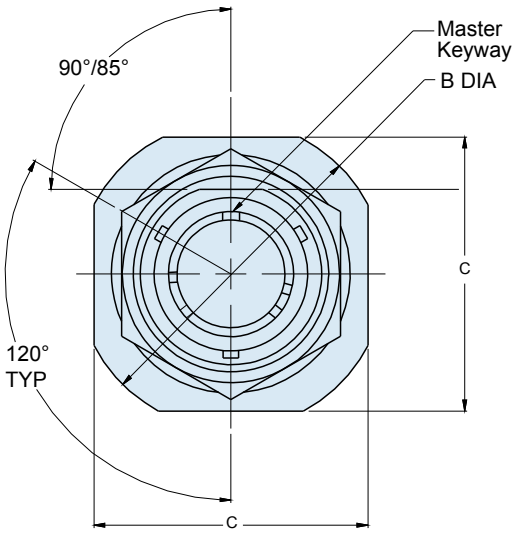

© 2010 Glenair, Inc.

GLENAIR, INC. • 1211 AIR WAY • GLENDALE, CA 91201-2497 • 818-247-6000 • FAX 818-500-9912
www.glenair.com
E-Mail: sales@glenair.com

MS27470
Jam Nut Mount Hermetic Receptacle
MIL-DTL-38999 Series I

Glenair®

How To Order: *Commercial*

Connector Series
231 - Series I Type

Shell Style
H7 - Hermetic Jam Nut Mount

Shell Size
09,11,13,15,17,19,21,23,25

Contact Termination
P - Pin, Solder Cup *S - Socket, Solder Cup*
X - Pin, Eyelet *Z - Socket, Eyelet*
C - Pin, PCB *D - Socket, PCB*

231 - 100 - H7 Z1 11 - 35 P N

Connector Type
100 - Hermetic Receptacle

Connector Material / Finish
ZL - CRES, Nickel
Z1 - CRES, Passivated
FT - Carbon Steel, Fused Tin

Insert Arrangement
Per MIL-STD-1560;
See Pages B-2 - B-4

Alternate Key Position
A, B, C, D,
(*N* = Normal)

TABLE I: CONNECTOR DIMENSIONS

SHELL SIZE	A THREAD CLASS 2A	B DIA ±.016(0.4)	C ±.016(0.4)	D FLAT ±.005(0.1)	E DIA ±.011(0.3)	F DIA ±.005(0.1)
9/09	.6875-24 UNEF	1.188(30.2)	1.062(27.0)	.65(16.5)	.602(15.3)	.648(16.5)
11	.8125-20 UNEF	1.375(34.9)	1.25(31.8)	.75(19.1)	.726(18.4)	.772(19.6)
13	1.000-20 UNEF	1.5(38.1)	1.375(34.9)	.937(23.8)	.852(21.6)	.898(22.8)
15	1.125-18 UNEF	1.625(41.3)	1.5(38.1)	1.061(26.9)	.978(24.8)	1.024(26.0)
17	1.250-18 UNEF	1.75(44.5)	1.625(41.3)	1.186(30.1)	1.102(28.0)	1.148(29.2)
19	1.375-18 UNEF	1.938(49.2)	1.812(46.0)	1.311(33.3)	1.228(31.2)	1.274(32.4)
21	1.500-18 UNEF	2.062(52.4)	1.938(49.2)	1.436(36.5)	1.352(34.3)	1.398(35.5)
23	1.625-18 UNEF	2.188(55.6)	2.062(52.4)	1.561(39.6)	1.478(37.5)	1.524(38.7)
25	1.750-18 UNS	2.312(58.7)	2.188(55.6)	1.686(42.8)	1.602(40.7)	1.648(41.9)

TABLE I (CONTINUED): CONNECTOR DIMENSIONS

SHELL SIZE	G ±.016 (0.4)	K DIA ±.005 (0.1)	L MAX	M MAX	N +.000 -.002 (.05)
9/09	.109 (2.8)	.698 (17.7)	1.200 (30.5)	.280 (7.1)	.698 (17.7)
11	.109 (2.8)	.830 (21.1)	1.200 (30.5)	.280 (7.1)	.830 (21.1)
13	.109 (2.8)	1.015 (25.8)	1.200 (30.5)	.280 (7.1)	1.015 (25.8)
15	.109 (2.8)	1.140 (29.0)	1.200 (30.5)	.280 (7.1)	1.140 (29.0)
17	.109 (2.8)	1.265 (32.1)	1.200 (30.5)	.280 (7.1)	1.265 (32.1)
19	.140 (3.6)	1.390 (35.3)	1.231 (31.3)	.311 (7.9)	1.390 (35.3)
21	.140 (3.6)	1.515 (38.5)	1.231 (31.3)	.311 (7.9)	1.515 (38.5)
23	.140 (3.6)	1.640 (41.7)	1.231 (31.3)	.311 (7.9)	1.640 (41.7)
25	.140 (3.6)	1.765 (44.8)	1.231 (31.3)	.311 (7.9)	1.765 (44.8)

TABLE II: CONTACT SIZE

PRINTED CIRCUIT TAIL CONFIGURATIONS
CONTACT STYLE C AND D

SIZE 12 AND SIZE 16

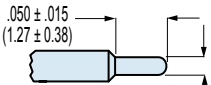

SIZE 22D AND SIZE 20 P

Contact Size	ø P
22D	.011 (0.28) .015 (0.38)
20	.024 (0.61) .028 (0.71)
16	.0635 (1.61) .0615 (1.56)
12	.095 (2.41) .093 (2.36)

© 2010 Glenair, Inc.

GLENAIR, INC. • 1211 AIR WAY • GLENDALE, CA 91201-2497 • 818-247-6000 • FAX 818-500-9912
www.glenair.com E-Mail: sales@glenair.com

MS27471
Solder Mount Hermetic Receptacle
MIL-DTL-38999 Series I

How To Order: *MS*

Shell Style
MS27471 - Solder Mount, Series I

Connector Material / Finish
D - Carbon Steel - Fused Tin Finish
E - Stainless Steel - Passivate Finish
N - Stainless Steel - Nickel Finish

Contact Termination
P - Pin, Solder Cup
X - Pin, Eyelet
C - Pin, PCB Flex Feedthrough
S - Socket, Solder Cup
Z - Socket, Eyelet
D - Socket, PCB Flex Feedthrough

MS27471	Y	11	N	35	P	A

Class
Y- Hermetic

Shell Size
9,11,13,15,17,19,21,23,25

Insert Arrangement
MIL-DTL-38999 Series I
Hermetic Inserts Per
MIL-STD-1560;
See Pages B-2 - B-4

Alternate Key Position
A, B, C, D
(Omit for Normal)

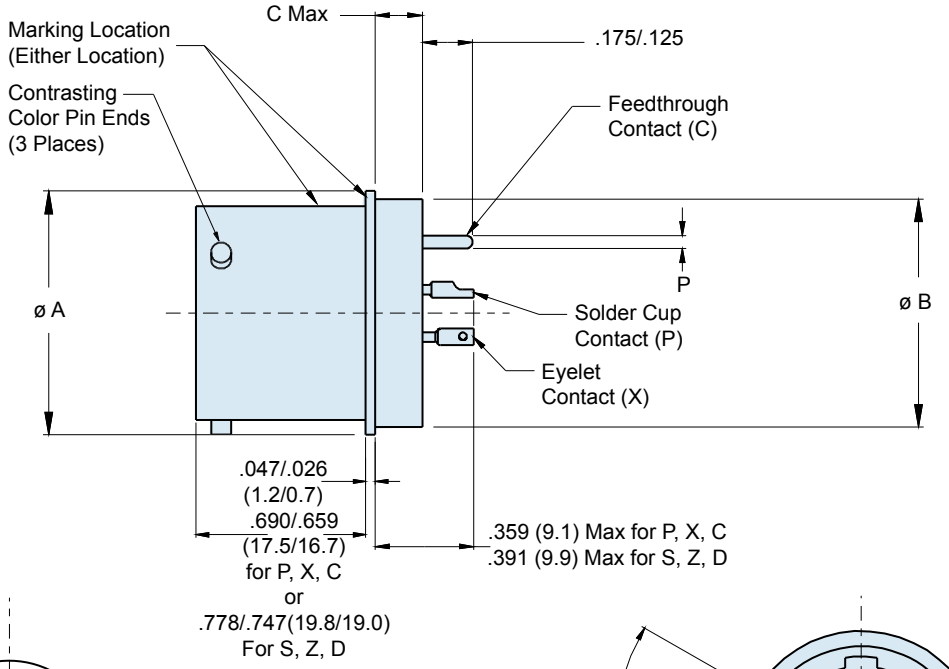

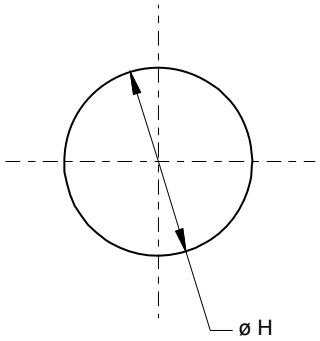

Front Panel Mounting

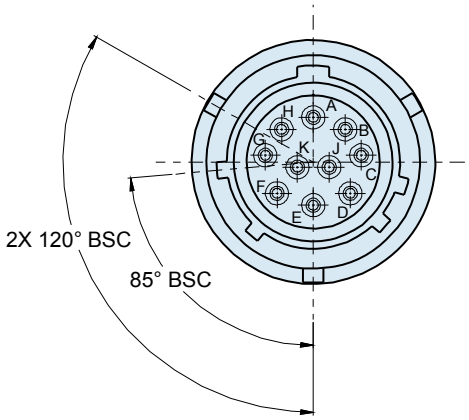

© 2010 Glenair, Inc.

GLENAIR, INC. • 1211 AIR WAY • GLENDALE, CA 91201-2497 • 818-247-6000 • FAX 818-500-9912
www.glenair.com
E-Mail: sales@glenair.com

MS27471
Solder Mount Hermetic Receptacle
MIL-DTL-38999 Series I

How To Order: *Commercial*

Connector Series
231 - Series I Type

Shell Style
H5 - Hermetic Solder Mount

Shell Size
09,11,13,15,17,19,21,23,25

Contact Termination
P - Pin, Solder Cup *S - Socket, Solder Cup*
X - Pin, Eyelet *Z - Socket, Eyelet*
C - Pin, PCB *D - Socket, PCB*

231 - 100 - H5 Z1 11 - 35 P N

Connector Type
100 - Hermetic Receptacle

Connector Material / Finish
ZL - CRES, Nickel
Z1 - CRES, Passivated
FT - Carbon Steel, Fused Tin

Insert Arrangement
Per MIL-STD-1560;
See Pages B-2 - B-4

Alternate Key Position
A, B, C, D,
(*N* = Normal)

TABLE I: CONNECTOR DIMENSIONS

SHELL SIZE	ø A ±.016(0.4)	ø B	C MAX	ø H ±.005(0.1)
9/09	.750(19.1)	.673(17.1) .667(16.9)	.187(4.7)	.680(17.3)
11	.844(21.4)	.782(19.9) .776(19.7)		.789(20.0)
13	.969(24.6)	.907(23.0) .901(22.9)		.914(23.2)
15	1.094(27.8)	1.032(26.2) 1.027(26.1)		1.038(26.4)
17	1.218(30.9)	1.157(29.4) 1.151(29.2)		1.164(29.6)
19	1.312(33.3)	1.251(31.8) 1.245(31.6)		1.258(32.0)
21	1.438(36.5)	1.376(35.0) 1.370(34.8)		1.383(35.1)
23	1.563(39.7)	1.501(38.1) 1.495(38.0)	.218(5.5)	1.508(38.3)
25	1.688(42.9)	1.626(41.3) 1.620(41.1)		1.643(41.7)

TABLE II: CONTACT SIZE

PRINTED CIRCUIT TAIL CONFIGURATIONS
CONTACT STYLE C AND D

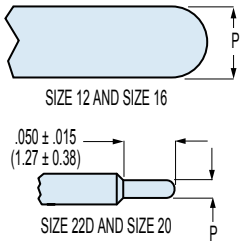

Contact Size	ø P
22D	.011 (0.28) .015 (0.38)
20	.024 (0.61) .028 (0.71)
16	.0635 (1.61) .0615 (1.56)
12	.095 (2.41) .093 (2.36)

© 2010 Glenair, Inc.

GLENAIR, INC. • 1211 AIR WAY • GLENDALE, CA 91201-2497 • 818-247-6000 • FAX 818-500-9912
www.glenair.com E-Mail: sales@glenair.com

MS27475
Wall Mount Hermetic Receptacle
MIL-DTL-38999 Series II

How To Order: *MS*

Shell Style
MS27475 - Wall Mount, Series II

Connector Material / Finish
D - Carbon Steel - Fused Tin Finish
E - Stainless Steel - Passivate Finish
N - Stainless Steel - Nickel Finish

Contact Termination
P - Pin, Solder Cup
X - Pin, Eyelet
C - Pin, PCB Flex Feedthrough
S - Socket, Solder Cup
Z - Socket, Eyelet
D - Socket, PCB Flex Feedthrough

MS27475 | Y | 10 | N | 35 | P | A

Class
Y- Hermetic

Shell Size
8,10,12,14,16,18,20,22,24

Insert Arrangement
MIL-DTL-38999 Series II Hermetic Inserts Per MIL-STD-1560; See Pages B-2 - B4

Alternate Key Position
A, B, C, D (Omit for Normal)

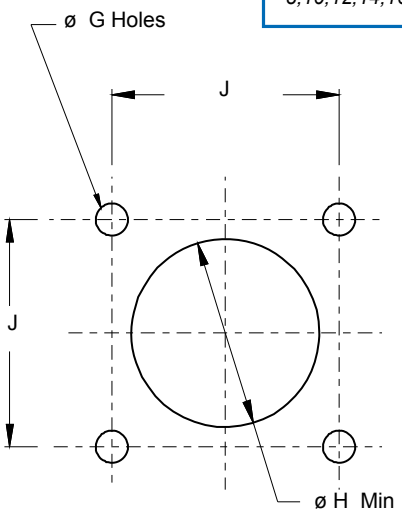

Front Panel Mounting

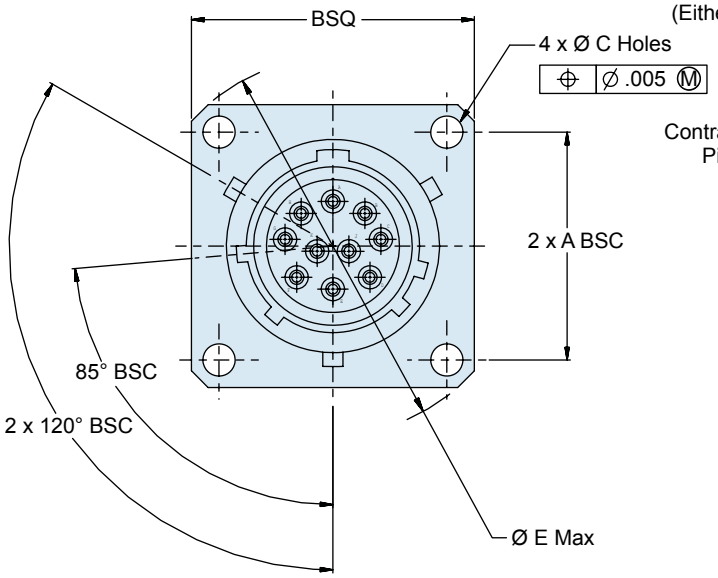

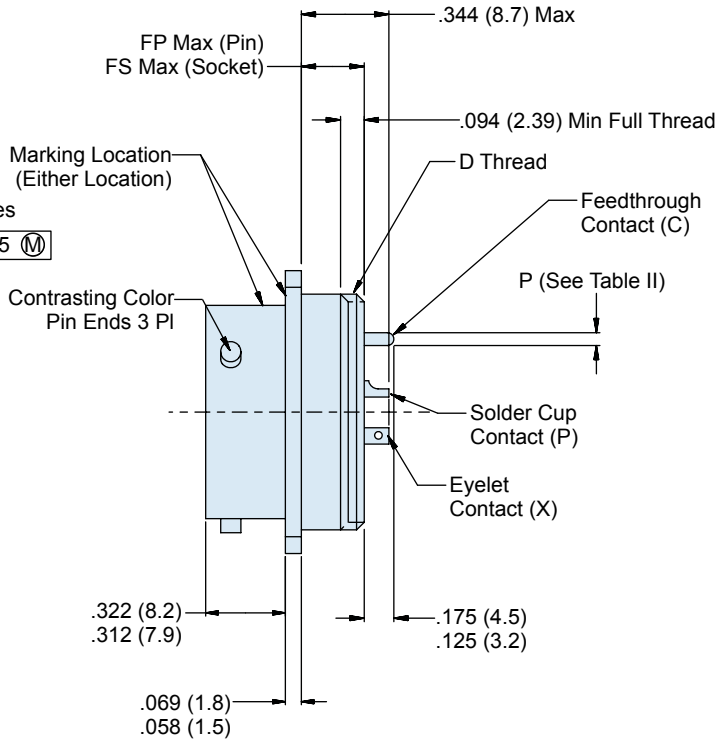

© 2010 Glenair, Inc. CAGE CODE 06324 Printed in U.S.A.

MS27475
Wall Mount Hermetic Receptacle
MIL-DTL-38999 Series II

Glenair®

How To Order: *Commercial*

Connector Series
232 - Series II Type

Shell Style
H0 - Hermetic Wall Mount

Shell Size
08,10,12,14,16,18,20,22,24

Contact Termination
P - Pin, Solder Cup *S - Socket, Solder Cup*
X - Pin, Eyelet *Z - Socket, Eyelet*
C - Pin, PCB *D - Socket, PCB*

232 - 100 - H0 Z1 10 - 35 P N

Connector Type
100 - Hermetic Receptacle

Connector Material / Finish
ZL - CRES, Nickel
Z1 - CRES, Passivated
FT - Carbon Steel, Fused Tin

Insert Arrangement
Per MIL-STD-1560;
See Pages B-2 - B-4

Alternate Key Position
A, B, C, D,
(*N* = Normal)

TABLE I: CONNECTOR DIMENSIONS

SHELL SIZE	A BSC	B SQ MAX	ø C HOLES	D Threads (UNEF-2A)	ø E MAX	FP MAX	FS MAX
8/08	.594(15.1)	.828(21.0)	.130(3.3) .115(2.9)	.5625-24	1.078(27.4)	.250 (6.35)	.375 (9.5)
10	.719(18.3)	.954(24.2)		.6875-24	1.256(31.9)		
12	.812(20.6)	1.047(26.6)		.8125-20	1.391(35.3)		
14	.906(23.0)	1.141(29.0)		.9375-20	1.516(38.5)		
16	.969(24.6)	1.234(31.3)		1.0625-18	1.641(41.7)		
18	1.062(27.0)	1.328(33.7)		1.1875-18	1.766(44.9)		
20	1.156(29.4)	1.453(36.9)		1.3125-18	1.891(48.0)		
22	1.250(31.8)	1.578(40.1)		1.4375-10	2.016(51.2)		
24	1.375(34.9)	1.703(43.3)	.157(4.0) .142(3.6)	1.5625-18	2.204(56.0)	.375 (9.53)	.406 (10.3)

TABLE I (CONTINUED): CONNECTOR DIMENSIONS

SHELL SIZE	ø G HOLES	ø H MIN	ø J BSC
8	.133(3.4) .123(3.1)	.570(14.5)	.594(15.1)
10		.690(17.5)	.719(18.3)
12		.820(20.8)	.812(20.6)
14		.940(23.9)	.906(23.0)
16		1.070(27.2)	.969(24.6)
18		1.190(30.2)	1.062(27.0)
20		1.320(33.5)	1.156(29.4)
22	.159(4.0) .149(3.8)	1.440(36.6)	1.250(31.8)
24		1.570(39.9)	1.375(34.9)

TABLE II: CONTACT SIZE

PRINTED CIRCUIT TAIL CONFIGURATIONS
CONTACT STYLE C AND D

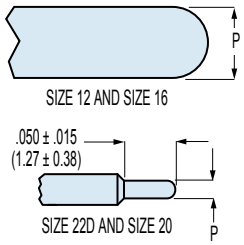

Contact Size	ø P
22D	.011 (0.28) .015 (0.38)
20	.024 (0.61) .028 (0.71)
16	.0635 (1.61) .0615 (1.56)
12	.095 (2.41) .093 (2.36)

© 2010 Glenair, Inc. CAGE CODE 06324 Printed in U.S.A.

MS27476
Box Mount Hermetic Receptacle
MIL-DTL-38999 Series II

How To Order: *MS*

Shell Style
MS27476 - Box Mount, Series II

Connector Material / Finish
D - Carbon Steel - Fused Tin Finish
E - Stainless Steel - Passivate Finish
N - Stainless Steel - Nickel Finish

Contact Termination
P - Pin, Solder Cup
X - Pin, Eyelet
C - Pin, PCB Flex Feedthrough
S - Socket, Solder Cup
Z - Socket, Eyelet
D - Socket, PCB Flex Feedthrough

MS27476	Y	10	N	35	P	A

Class
Y- Hermetic

Shell Size
8,10,12,14,16,18,20,22,24

Insert Arrangement
MIL-DTL-38999 Series II Hermetic Inserts Per MIL-STD-1560; See Pages B-2 - B-4

Alternate Key Position
A, B, C, D (Omit for Normal)

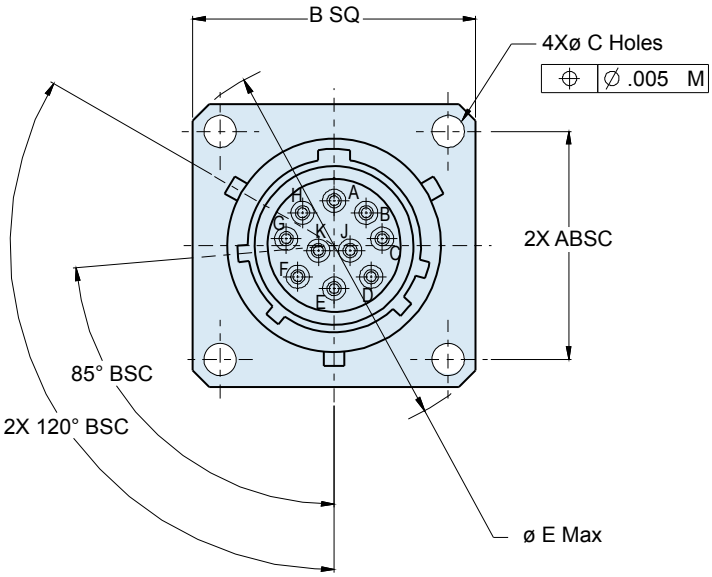

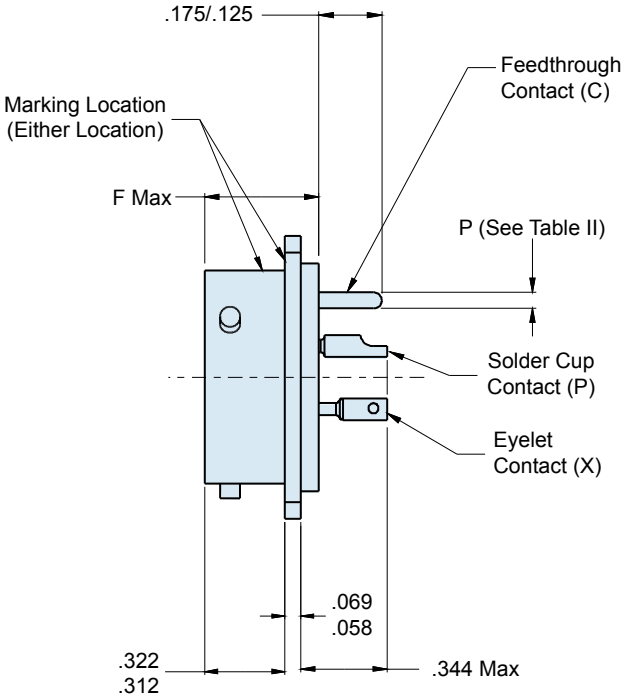

© 2010 Glenair, Inc.

GLENAIR, INC. • 1211 AIR WAY • GLENDALE, CA 91201-2497 • 818-247-6000 • FAX 818-500-9912
www.glenair.com
E-Mail: sales@glenair.com

MS27476
Box Mount Hermetic Receptacle
MIL-DTL-38999 Series II

Glenair®

How To Order: *Commercial*

Connector Series
232 - Series II Type

Shell Style
H2 - Hermetic Box Mount

Shell Size
08,10,12,14,16,18,20,22,24

Contact Termination
P - Pin, Solder Cup *S - Socket, Solder Cup*
X - Pin, Eyelet *Z - Socket, Eyelet*
C - Pin, PCB *D - Socket, PCB*

232 - 100 - H2 Z1 10 - 35 P N

Connector Type
100 - Hermetic Receptacle

Connector Material / Finish
ZL - CRES, Nickel
Z1 - CRES, Passivated
FT - Carbon Steel, Fused Tin

Insert Arrangement
Per MIL-STD-1560;
See Pages B-2 - B-4

Alternate Key Position
A, B, C, D,
(*N* = Normal)

TABLE I: CONNECTOR DIMENSIONS

SHELL SIZE	A BSC	B SQ MAX	ø C HOLES	ø E MAX	F MAX
8/08	.594(15.1)	.828(21.0)	.130(3.3) .115(2.9)	1.078(27.4)	.453(11.5)
10	.719(18.3)	.954(24.2)		1.266(32.2)	
12	.812(20.6)	1.047(26.6)		1.391(35.3)	
14	.906(23.0)	1.141(29.0)		1.516(38.5)	
16	.969(24.6)	1.234(31.3)		1.641(41.7)	
18	1.062(27.0)	1.328(33.7)		1.766(44.9)	
20	1.156(29.4)	1.453(36.9)		1.891(48.0)	
22	1.250(31.8)	1.578(40.1)		2.016(51.2)	
24	1.375(34.9)	1.703(43.3)	.157(4.0) .142(3.6)	2.204(56.0)	.484(12.3)

TABLE II: CONTACT SIZE

PRINTED CIRCUIT TAIL CONFIGURATIONS
CONTACT STYLE C AND D

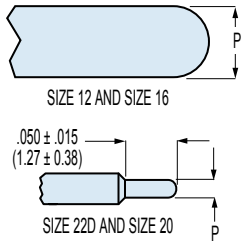

Contact Size	ø P
22D	.011 (0.28) .015 (0.38)
20	.024 (0.61) .028 (0.71)
16	.0635 (1.61) .0615 (1.56)
12	.095 (2.41) .093 (2.36)

TABLE I (CONTINUED): CONNECTOR DIMENSIONS

SHELL SIZE	ø G HOLES	ø H MIN	ø J BSC
8/08	.133(3.4) .123(3.1)	.570(14.5)	.594(15.1)
10		.690(17.5)	.719(18.3)
12		.820(20.8)	.812(20.6)
14		.940(23.9)	.906(23.0)
16		1.070(27.2)	.969(24.6)
18		1.190(30.2)	1.062(27.0)
20		1.320(33.5)	1.156(29.4)
22	.159(4.0) .149(3.8)	1.440(36.6)	1.250(31.8)
24		1.570(39.9)	1.375(34.9)

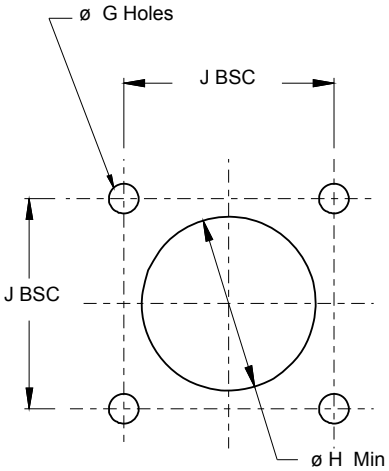

Front Panel Mounting

© 2010 Glenair, Inc.

GLENAIR, INC. • 1211 AIR WAY • GLENDALE, CA 91201-2497 • 818-247-6000 • FAX 818-500-9912
www.glenair.com E-Mail: sales@glenair.com

MS27477
Jam Nut Mount Hermetic Receptacle
MIL-DTL-38999 Series II

How To Order: *MS*

Shell Style
MS27477 - Jam Nut Mount, Series II

Connector Material / Finish
D - Carbon Steel - Fused Tin Finish
E - Stainless Steel - Passivate Finish
N - Stainless Steel - Nickel Finish

Contact Termination
P - Pin, Solder Cup
X - Pin, Eyelet
C - Pin, PCB Flex Feedthrough
S - Socket, Solder Cup
Z - Socket, Eyelet
D - Socket, PCB Flex Feedthrough

MS27477 | Y | 10 | N | 35 | P | A

Class
Y- Hermetic

Shell Size
8,10,12,14,16,18,20,22,24

Insert Arrangement
MIL-DTL-38999 Series II Hermetic Inserts Per MIL-STD-1560; See Pages B-2 - B-4

Alternate Key Position
A, B, C, D (Omit for Normal)

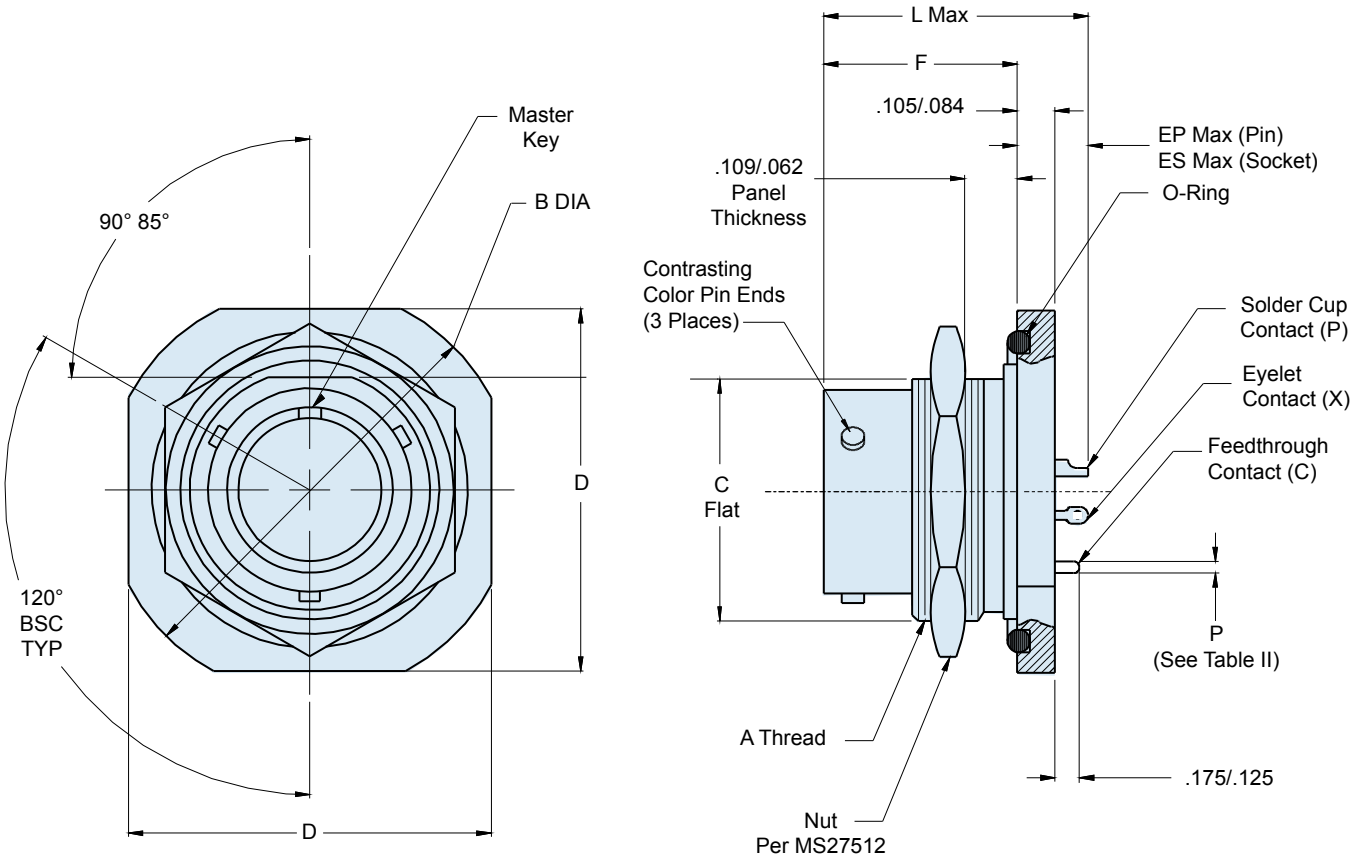

© 2010 Glenair, Inc. CAGE CODE 06324 Printed in U.S.A.

MS27477
Jam Nut Mount Hermetic Receptacle
MIL-DTL-38999 Series II

Glenair®

How To Order: *Commercial*

Connector Series
232 - Series II Type

Shell Style
H7 - Hermetic Box Mount

Shell Size
08,10,12,14,16,18,20,22,24

Contact Termination
P - Pin, Solder Cup *S - Socket, Solder Cup*
X - Pin, Eyelet *Z - Socket, Eyelet*
C - Pin, PCB *D - Socket, PCB*

232 - 100 - H7 Z1 10 - 35 P N

Connector Type
100 - Hermetic Receptacle

Connector Material / Finish
ZL - CRES, Nickel
Z1 - CRES, Passivated
FT - Carbon Steel, Fused Tin

Insert Arrangement
Per MIL-STD-1560;
See Pages B-2 - B-4

Alternate Key Position
A, B, C, D,
(*N* = Normal)

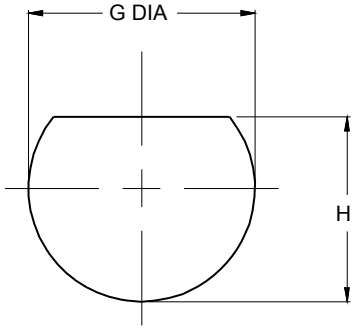

Recommended Panel Cut-Out

TABLE I: CONNECTOR DIMENSIONS

SHELL SIZE	A THREAD CLASS 2A	B DIA ±.016(0.4)	C FLAT ±.004(0.1)	D A/F ±.016(0.4)
8/08	.875-20 UNEF	1.375(34.9)	.815(20.7)	1.25(31.8)
10	1.000-20 UNEF	1.5(38.1)	.939(23.9)	1.375(34.9)
12	1.125-18 UNEF	1.625(41.3)	1.063(27.0)	1.5(38.1)
14	1.250-18 UNEF	1.75(44.5)	1.188(30.2)	1.625(41.3)
16	1.375-18 UNEF	1.938(49.2)	1.318(33.5)	1.781(45.2)
18	1.500-18 UNEF	2.016(51.2)	1.438(36.5)	1.890(48.0)
20	1.625-18 UNEF	2.141(54.4)	1.563(39.7)	2.016(51.2)
22	1.750-18 UNS	2.265(57.5)	1.688(42.9)	2.140(54.4)
24	1.875-16 UN	2.39(60.7)	1.813(46.1)	2.265(57.5)

TABLE I (CONTINUED): CONNECTOR DIMENSIONS

SHELL SIZE	EP MAX	ES MAX	F ±.005(0.1)	G DIA ±.005(0.1)	H ±.005(0.1)	L MAX
8/08	.281 (7.1)	.359 (9.1)	.438(11.1)	.889(22.6)	.828(21.0)	.724(18.4)
10	.281 (7.1)	.359 (9.1)	.438(11.1)	1.015(25.8)	.952(24.2)	.724(18.4)
12	.281 (7.1)	.359 (9.1)	.438(11.1)	1.139(28.9)	1.076(27.3)	.724(18.4)
14	.281 (7.1)	.359 (9.1)	.438(11.1)	1.264(32.1)	1.201(30.5)	.724(18.4)
16	.281 (7.1)	.359 (9.1)	.438(11.1)	1.389(35.3)	1.331(33.8)	.724(18.4)
18	.281 (7.1)	.359 (9.1)	.438(11.1)	1.515(38.5)	1.451(36.9)	.724(18.4)
20	.250 (6.4)	.344 (8.7)	.464(11.8)	1.640(41.7)	1.576(40.0)	.719(18.3)
22	.250 (6.4)	.344 (8.7)	.464(11.8)	1.745(44.3)	1.701(43.2)	.719(18.3)
24	.250 (6.4)	.344 (8.7)	.464(11.8)	1.890(48.0)	1.826(46.4)	.719(18.3)

TABLE II: CONTACT SIZE

PRINTED CIRCUIT TAIL CONFIGURATIONS
CONTACT STYLE C AND D

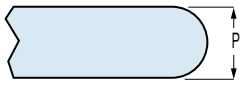

SIZE 12 AND SIZE 16

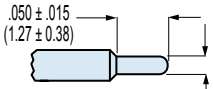

SIZE 22D AND SIZE 20 P

Contact Size	ø P
22D	.011 (0.28) .015 (0.38)
20	.024 (0.61) .028 (0.71)
16	.0635 (1.61) .0615 (1.56)
12	.095 (2.41) .093 (2.36)

© 2010 Glenair, Inc. CAGE CODE 06324 Printed in U.S.A.

MS27478
Solder Mount Hermetic Receptacle
MIL-DTL-38999 Series II

How To Order: *MS*

Shell Style
MS27478 - Solder Mount, Series II

Connector Material / Finish
D - Carbon Steel - Fused Tin Finish
E - Stainless Steel - Passivate Finish
N - Stainless Steel - Nickel Finish

Contact Termination
P - Pin, Solder Cup
X - Pin, Eyelet
C - Pin, PCB Flex Feedthrough
S - Socket, Solder Cup
Z - Socket, Eyelet
D - Socket, PCB Flex Feedthrough

MS27478	Y	10	N	35	P	A

Class
Y- Hermetic

Shell Size
8,10,12,14,16,18,20,22,24

Insert Arrangement
MIL-DTL-38999 Series II Hermetic Inserts Per MIL-STD-1560; See Pages B-2 - B-4

Alternate Key Position
A, B, C, D (Omit for Normal)

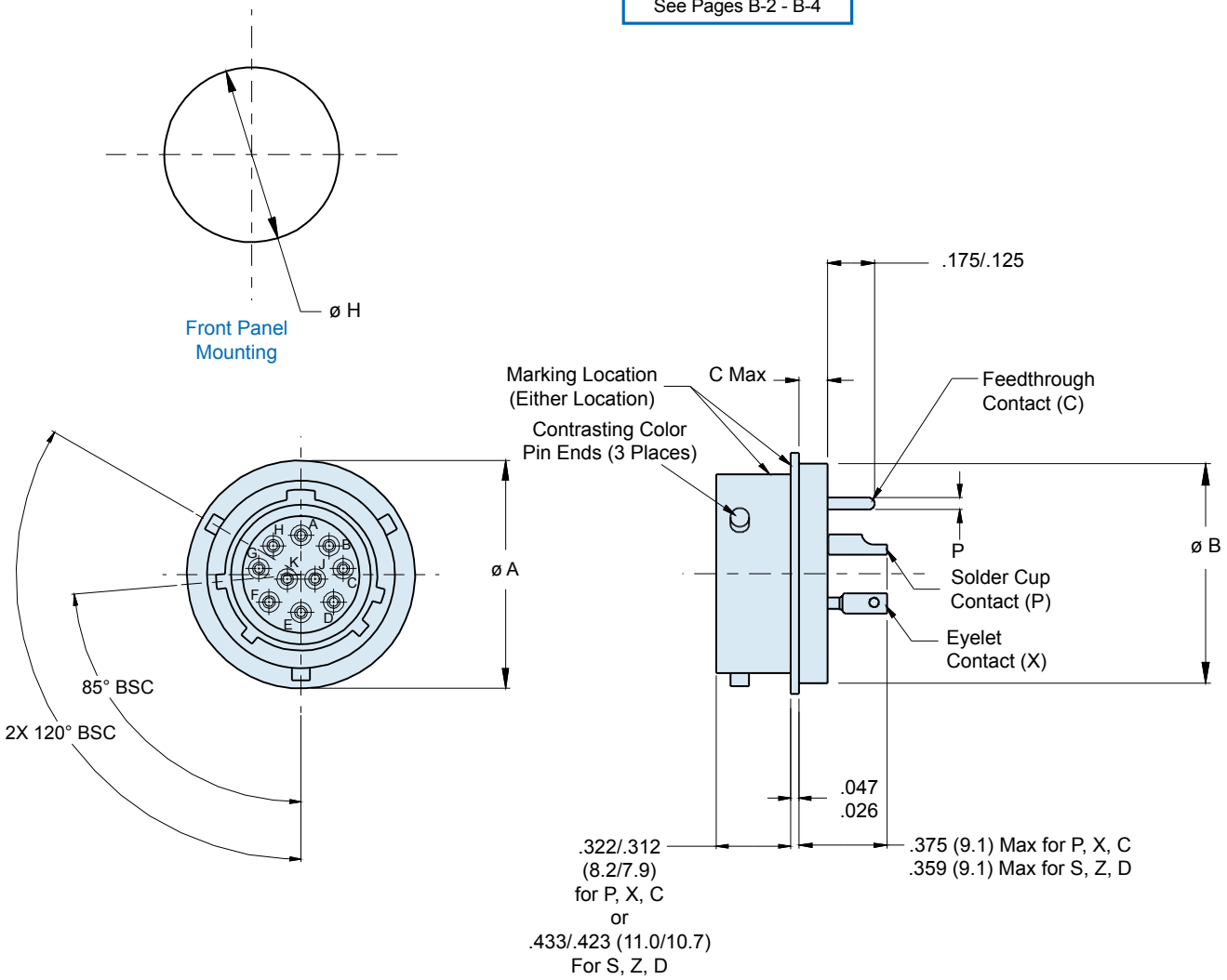

© 2010 Glenair, Inc. CAGE CODE 06324 Printed in U.S.A.

MS27478
Solder Mount Hermetic Receptacle
MIL-DTL-38999 Series II

How To Order: *Commercial*

Connector Series
232 - Series II Type

Shell Style
H5 - Hermetic Solder Mount

Shell Size
08,10,12,14,16,18,20,22,24

Contact Termination
P - Pin, Solder Cup *S - Socket, Solder Cup*
X - Pin, Eyelet *Z - Socket, Eyelet*
C - Pin, PCB *D - Socket, PCB*

232 - 100 - H5 Z1 10 - 35 P N

Connector Type
100 - Hermetic Receptacle

Connector Material / Finish
ZL - CRES, Nickel
Z1 - CRES, Passivated
FT - Carbon Steel, Fused Tin

Insert Arrangement
Per MIL-STD-1560;
See Pages B-2 - B-4

Alternate Key Position
A, B, C, D,
(*N* = Normal)

TABLE I: CONNECTOR DIMENSIONS

SHELL SIZE	ø A ±.011(0.3)	ø B	C MAX	ø H ±.005(0.1)
8/08	.688(17.5)	.557(14.) .557(14.1)	.125(3.2)	.570(14.5)
10	.798(20.3)	.673(17.1) .667(16.9)		.680(17.3)
12	.907(23.0)	.782(19.9) .776(19.7)		.789(20.0)
14	1.032(26.2)	.907(23.0) .901(22.9)		.914(23.2)
16	1.157(29.4)	1.032(26.2) 1.027(26.1)		1.039(26.4)
18	1.282(32.6)	1.157(29.4) 1.151(29.2)		1.164(29.6)
20	1.376(35.0)	1.251(31.8) 1.245(31.6)		1.258(32.0)
22	1.501(38.1)	1.376(35.0) 1.370(34.8)	.156(4.0)	1.383(35.1)
24	1.626(41.3)	1.501(38.1) 1.495(38.0)		1.508(38.3)

TABLE II: CONTACT SIZE

PRINTED CIRCUIT TAIL CONFIGURATIONS
CONTACT STYLE C AND D

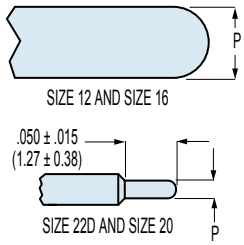

Contact Size	ø P
22D	.011 (0.28) .015 (0.38)
20	.024 (0.61) .028 (0.71)
16	.0635 (1.61) .0615 (1.56)
12	.095 (2.41) .093 (2.36)

© 2010 Glenair, Inc.

GLENAIR, INC. • 1211 AIR WAY • GLENDALE, CA 91201-2497 • 818-247-6000 • FAX 818-500-9912
www.glenair.com E-Mail: sales@glenair.com

D38999/21
Box Mount Hermetic Receptacle
MIL-DTL-38999 Series III

How To Order: *MS*

Basic Specification	Connector Material / Finish	Insert Arrangement	Alternate Key Position			
D38999	*N - CRES, Nickel* *Y - CRES, Passivated*	Per MIL-STD-1560; See Pages B2 - B4	*A, B, C, D, E* (*N* = Normal)			
D38999	**/21**	**Y**	**B**	**35**	**P**	**N**

Shell Style
/21 - Box Mount

Shell Size
A - 9
B - 11
C - 13
D - 15
E - 17
F - 19
G - 21
H - 23
J - 25

Contact Termination
P - Pin, Solder Cup
X - Pin, Eyelet
C - Pin, PCB Flex Feedthrough
S - Socket, Solder Cup
Z - Socket, Eyelet
D - Socket, PCB Flex Feedthrough

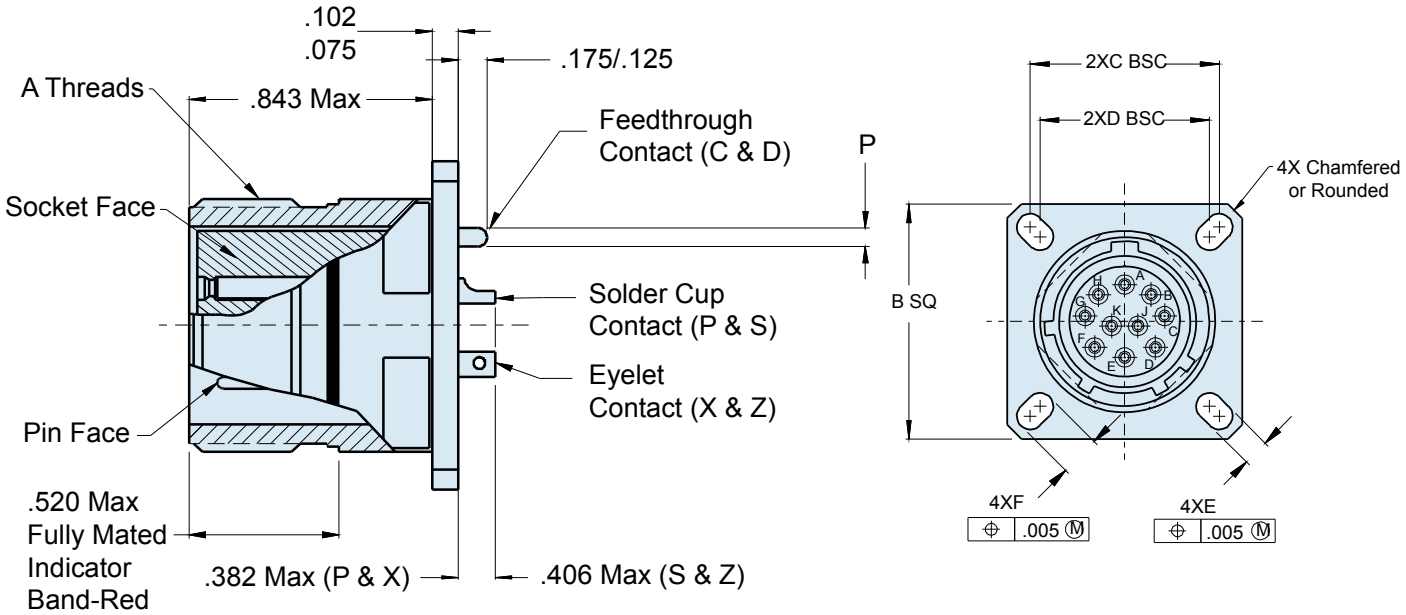

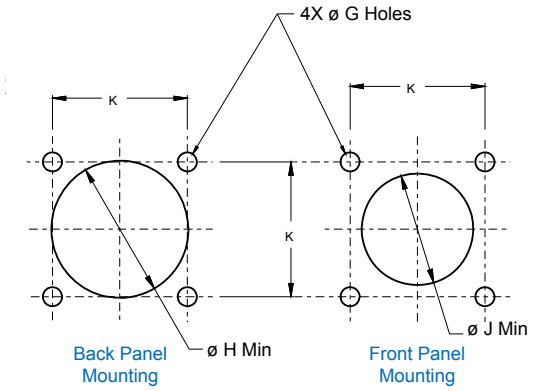

© 2010 Glenair, Inc.
CAGE CODE 06324
Printed in U.S.A.

D38999/21
Box Mount Hermetic Receptacle
MIL-DTL-38999 Series III

How To Order: *Commercial*

Connector Series
233 - D38999 Series III Type

Shell Style
H2 - Hermetic Box Mount

Shell Size
09,11,13,15,17,19,21,23,25

Contact Termination
P - Pin, Solder Cup *S - Socket, Solder Cup*
X - Pin, Eyelet *Z - Socket, Eyelet*
C - Pin, PCB *D - Socket, PCB*

233 - 100 - H2 Z1 11 - 35 P N

Connector Type
100 - Hermetic Receptacle

Connector Material / Finish
ZL - CRES, Nickel
Z1 - CRES, Passivated

Insert Arrangement
Per MIL-STD-1560;
See Pages B-2 - B-4

Alternate Key Position
A, B, C, D, E
(*N* = Normal)

TABLE I: CONNECTOR DIMENSIONS

SHELL SIZE CODE	SHELL SIZE	A THREAD	B SQ ±.012(0.3)	C BSC	D BSC	E ±.008(0.2)	F ±.008(0.2)
A	9/09	.6250-.1P-.3L-TS-2A	.937(23.8)	.719(18.3)	.594(15.1)	.128(3.3)	.216(5.5)
B	11	.7500-.1P-.3L-TS-2A	1.031(26.2)	.812(20.6)	.719(18.3)	.128(3.3)	.194(4.9)
C	13	.8750-.1P-.3L-TS-2A	1.126(28.6)	.906(23.0)	.812(20.6)	.128(3.3)	.194(4.9)
D	15	1.0000-.1P-.3L-TS-2A	1.220(31.0)	.969(24.6)	.906(23.0)	.128(3.3)	.194(4.9)
E	17	1.1875-.1P-.3L-TS-2A	1.311(33.3)	1.062(27.0)	.969(24.6)	.128(3.3)	.194(4.9)
F	19	1.2500-.1P-.3L-TS-2A	1.437(36.5)	1.156(29.4)	1.062(27.0)	.128(3.3)	.194(4.9)
G	21	1.3750-.1P-.3L-TS-2A	1.563(39.7)	1.250(31.8)	1.156(29.4)	.128(3.3)	.194(4.9)
H	23	1.5000-.1P-.3L-TS-2A	1.689(42.9)	1.375(34.9)	1.250(31.8)	.154(3.9)	.242(6.1)
J	25	1.6250-.1P-.3L-TS-2A	1.811(46.0)	1.500(38.1)	1.375(34.9)	.154(3.9)	.242(6.1)

TABLE I (CONTINUED): CONNECTOR DIMENSIONS

SHELL SIZE CODE	SHELL SIZE	ø G HOLES ±.005(0.1)	ø H MIN	ø J MIN	K ±.005(0.1)
A	9/09	.128(3.3)	.656(16.7)	.516(13.1)	.719(18.3)
B	11	.128(3.3)	.781(19.8)	.625(15.9)	.812(20.6)
C	13	.128(3.3)	.921(23.4)	.750(19.1)	.906(23.0)
D	15	.128(3.3)	1.047(26.6)	.906(23.0)	.968(24.6)
E	17	.128(3.3)	1.218(30.9)	1.016(25.8)	1.062(27.0)
F	19	.128(3.3)	1.296(32.9)	1.142(35.9)	1.156(29.4)
G	21	.128(3.3)	1.421(36.1)	1.266(32.2)	1.250(31.8)
H	23	.154(3.9)	1.546(39.3)	1.375(34.9)	1.375(34.9)
J	25	.154(3.9)	1.672(42.5)	1.484(37.7)	1.500(38.1)

TABLE II: CONTACT SIZE

PRINTED CIRCUIT TAIL CONFIGURATIONS
CONTACT STYLE C AND D

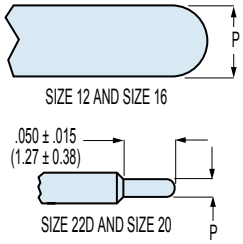

Contact Size	ø P
22D	.011 (0.28) .015 (0.38)
20	.024 (0.61) .028 (0.71)
16	.0635 (1.61) .0615 (1.56)
12	.095 (2.41) .093 (2.36)

© 2010 Glenair, Inc. CAGE CODE 06324 Printed in U.S.A.

D38999/23
Jam Nut Mount Hermetic Receptacle
MIL-DTL-38999 Series III

How To Order: *MS*

Basic Specification	Connector Material / Finish	Insert Arrangement	Alternate Key Position
D38999	*N - CRES, Nickel* *Y - CRES, Passivated*	Per MIL-STD-1560; See Pages B2 - B4	*A, B, C, D, E* (*N* = Normal)

D38999 | /23 | Y | B | 35 | P | N

Shell Style
/23 - Jam Nut Mount

Shell Size
A - 9
B - 11
C - 13
D - 15
E - 17
F - 19
G - 21
H - 23
J - 25

Contact Termination
P - Pin, Solder Cup
X - Pin, Eyelet
C - Pin, PCB Flex Feedthrough
S - Socket, Solder Cup
Z - Socket, Eyelet
D - Socket, PCB Flex Feedthrough

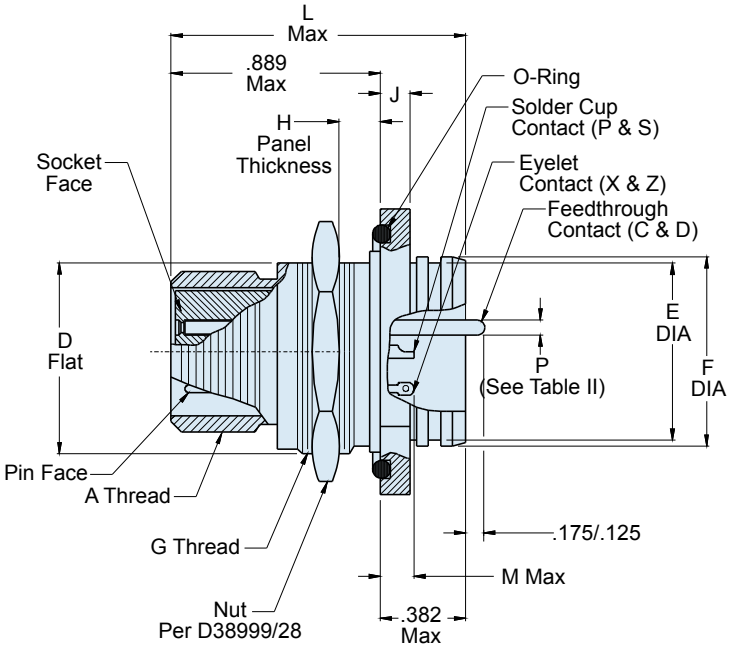

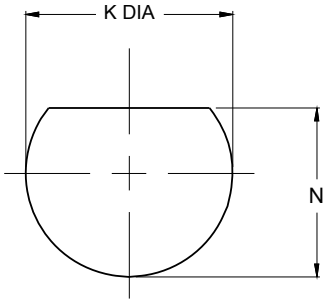

Recommended Panel Cut-Out

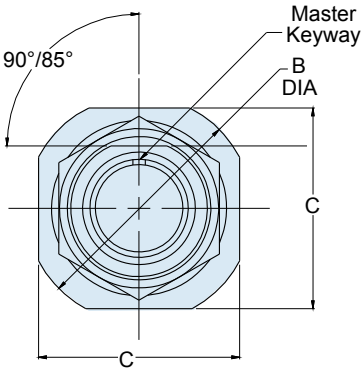

TABLE II: CONTACT SIZE

PRINTED CIRCUIT TAIL CONFIGURATIONS
CONTACT STYLE C AND D

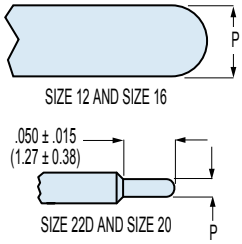

Contact Size	ø P
22D	.011 (0.28) .015 (0.38)
20	.024 (0.61) .028 (0.71)
16	.0635 (1.61) .0615 (1.56)
12	.095 (2.41) .093 (2.36)

© 2010 Glenair, Inc.

D38999/23
Jam Nut Mount Hermetic Receptacle
MIL-DTL-38999 Series III

Glenair®

How To Order: *Commercial*

Connector Series
233 - Series III Type

Shell Style
H7 - Hermetic Jam Nut Mount

Shell Size
09,11,13,15,17,19,21,23,25

Contact Termination
P - Pin, Solder Cup *S - Socket, Solder Cup*
X - Pin, Eyelet *Z - Socket, Eyelet*
C - Pin, PCB *D - Socket, PCB*

233 - 100 - H7 Z1 11 - 35 P N

Connector Type
100 - Hermetic Receptacle

Connector Material / Finish
ZL - CRES, Nickel
Z1 - CRES, Passivated

Insert Arrangement
Per MIL-STD-1560;
See Pages B-2 - B-4

Alternate Key Position
A, B, C, D, E
(*N* = Normal)

TABLE I: CONNECTOR DIMENSIONS

SHELL SIZE CODE	SHELL SIZE	A THREAD -0.1P-0.03L-TS	B DIA	C A/F ±.015(0.4)	D FLAT ±.005(0.1)	E DIA ±.012(0.3)	F DIA	G THREAD ISO METRIC	H ±.032(0.8)
A	9/09	0.625	1.200(30.5) 1.178(29.9)	1.063(27.0)	.650(16.5)	.603(15.3)	.653(16.6) .642(16.3)	M17 X 1.0-6g	.094(2.4)
B	11	0.750	1.385(35.2) 1.363(34.6)	1.252(31.8)	.750(19.1)	.725(18.4)	.775(19.7) .764(19.4)	M20 X 1.0-6g	.094(2.4)
C	13	0.875	1.511(38.4) 1.489(37.8)	1.374(34.9)	.937(23.8)	.851(21.6)	.905(23.0) .894(22.7)	M25 X 1.0-6g	.094(2.4)
D	15	1.000	1.637(41.6) 1.615(41.0)	1.500(38.1)	1.061(26.9)	.977(24.8)	1.031(26.2) 1.020(25.9)	M28 X 1.0-6g	.094(2.4)
E	17	1.187	1.763(44.8) 1.741(44.2)	1.626(41.3)	1.186(30.1)	1.103(28.0)	1.153(29.3) 1.142(29.0)	M32 X 1.0-6g	.094(2.4)
F	19	1.250	1.948(49.5) 1.926(48.9)	1.811(46.0)	1.311(33.3)	1.229(31.2)	1.278(32.5) 1.268(32.2)	M35 X 1.0-6g	.094(2.4)
G	21	1.375	2.074(52.7) 2.051(52.1)	1.937(49.2)	1.436(36.5)	1.351(34.3)	1.405(35.7) 1.394(35.4)	M38 X 1.0-6g	.094(2.4)
H	23	1.500	2.200(55.9) 2.177(55.3)	2.063(52.4)	1.561(39.6)	1.477(37.5)	1.531(38.9) 1.520(38.6)	M41 X 1.0-6g	.094(2.4)
J	25	1.625	2.322(59.0) 2.300(58.4)	2.189(55.6)	1.686(42.8)	1.603(40.7)	1.653(42.0) 1.642(41.7)	M44 X 1.0-6g	.094(2.4)

TABLE I: (Continued) CONNECTOR DIMENSIONS

J ±.008(0.2)	K DIA ±.005 (0.1)	L MAX	M MAX		N ±.005 (0.1)
			P&X	S&Z	
.106(2.7)	.703/.693 (17.86/17.60)	1.149(29.2)	.208(5.3)	.232(5.9)	.657/.655 (16.69/16.70)
.106(2.7)	.835/.825 (20.96/20.96)	1.149(29.2)	.208(5.3)	.232(5.9)	.771/.769 (19.58/19.53)
.106(2.7)	1.020/1.010 (25.65/25.65)	1.153(29.3)	.200(5.1)	.224(5.7)	.955/.953 (24.26/24.21)
.106(2.7)	1.145/1.135 (28.83/28.83)	1.153(29.3)	.200(5.1)	.224(5.7)	1.085/1.083 (27.56/27.51)
.106(2.7)	1.270/1.260 (32.01/32.00)	1.153(29.3)	.200(5.1)	.224(5.7)	1.210/1.208 (30.73/30.68)
.138(3.5)	1.395/1.385 (35.43/35.18)	1.185(30.1)	.200(5.1)	.224(5.7)	1.335/1.333 (33.91/33.86)
.138(3.5)	1.520/1.510 (38.60/38.35)	1.185(30.1)	.200(5.1)	.224(5.7)	1.460/1.458 (37.08/37.03)
.138(3.5)	1.645/1.635 (41.78/41.53/)	1.185(30.1)	.200(5.1)	.224(5.7)	1.585/1.583 (40.26/40.21)
.138(3.5)	1.770/1.760 (44.96/44.70)	1.185(30.1)	.200(5.1)	.224(5.7)	1.710/1.708 (43.43/43.38)

© 2010 Glenair, Inc. CAGE CODE 06324 Printed in U.S.A.

D38999/25
Solder Mount Hermetic Receptacle
MIL-DTL-38999 Series III

How To Order: *MS*

Basic Specification	Connector Material / Finish	Insert Arrangement	Alternate Key Position
D38999	*N - CRES, Nickel* *Y - CRES, Passivated*	Per MIL-STD-1560; See Pages B2 - B4	*A, B, C, D, E* (*N* = Normal)

D38999	/25	Y	B	35	P	N

Shell Style
/25 - Solder Mount

Shell Size

A - 9	*F - 19*
B - 11	*G - 21*
C - 13	*H - 23*
D - 15	*J - 25*
E - 17	

Contact Termination

P - Pin, Solder Cup	*S - Socket, Solder Cup*
X - Pin, Eyelet	*Z - Socket, Eyelet*
C - Pin, PCB Flex Feedthrough	*D - Socket, PCB Flex Feedthrough*

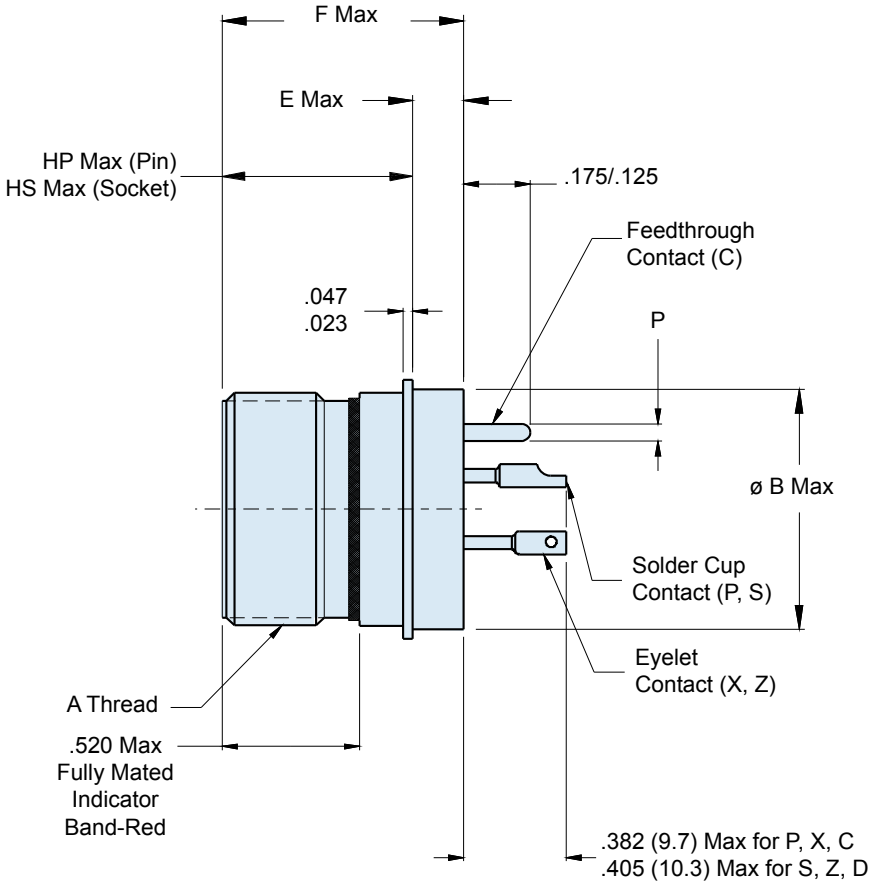

© 2010 Glenair, Inc. CAGE CODE 06324 Printed in U.S.A.

D38999/25
Solder Mount Hermetic Receptacle
MIL-DTL-38999 Series III

Glenair®

How To Order: *Commercial*

Connector Series
233 - Series III Type

Shell Style
H5 - Hermetic Solder Mount

Shell Size
09,11,13,15,17,19,21,23,25

Contact Termination
P - Pin, Solder Cup *S - Socket, Solder Cup*
X - Pin, Eyelet *Z - Socket, Eyelet*
C - Pin, PCB *D - Socket, PCB*

233 - 100 - H5 Z1 11 - 35 P N

Connector Type
100 - Hermetic Receptacle

Connector Material / Finish
ZL - CRES, Nickel
Z1 - CRES, Passivated

Insert Arrangement
Per MIL-STD-1560;
See Pages B-2 - B-4

Alternate Key Position
A, B, C, D, E
(*N* = Normal)

TABLE I: CONNECTOR DIMENSIONS

SHELL SIZE CODE	SHELL SIZE	A THREAD	ø B MAX	ø C MAX	ø D ±.005(0.1)	E MAX	F MAX	HP MAX	HS MAX
A	9/09	.6250-.1P-.3L-TS-2A	.673(17.1)	.764(19.4)	.680(17.3)	.201(5.1)	.937(23.8)	.677(17.2)	.764(19.4)
B	11	.7500-.1P-.3L-TS-2A	.783(19.9)	.858(21.8)	.789(20.0)	.201(5.1)	.937(23.8)	.677(17.2)	.764(19.4)
C	13	.8750-.1P-.3L-TS-2A	.909(23.1)	.980(24.9)	.914(23.2)	.201(5.1)	.937(23.8)	.677(17.2)	.764(19.4)
D	15	1.0000-.1P-.3L-TS-2A	1.031(26.2)	1.106(28.1)	1.038(26.4)	.201(5.1)	.937(23.8)	.677(17.2)	.764(19.4)
E	17	1.1875-.1P-.3L-TS-2A	1.157(29.4)	1.232(31.3)	1.164(29.6)	.201(5.1)	.937(23.8)	.677(17.2)	.764(19.4)
F	19	1.2500-.1P-.3L-TS-2A	1.252(31.8)	1.323(33.6)	1.258(32.0)	.201(5.1)	.937(23.8)	.677(17.2)	.764(19.4)
G	21	1.3750-.1P-.3L-TS-2A	1.378(35.0)	1.449(36.8)	1.383(35.1)	.201(5.1)	.937(23.8)	.677(17.2)	.764(19.4)
H	23	1.5000-.1P-.3L-TS-2A	1.504(38.2)	1.575(40.0)	1.508(38.3)	.232(5.9)	.969(24.6)	.677(17.2)	.764(19.4)
J	25	1.6250-.1P-.3L-TS-2A	1.626(41.3)	1.701(43.2)	1.643(41.7)	.232(5.9)	.969(24.6)	.677(17.2)	.764(19.4)

TABLE II: CONTACT SIZE

PRINTED CIRCUIT TAIL CONFIGURATIONS
CONTACT STYLE C AND D

SIZE 12 AND SIZE 16

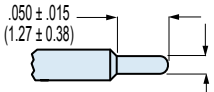

SIZE 22D AND SIZE 20 P

Contact Size	ø P
22D	.011 (0.28) .015 (0.38)
20	.024 (0.61) .028 (0.71)
16	.0635 (1.61) .0615 (1.56)
12	.095 (2.41) .093 (2.36)

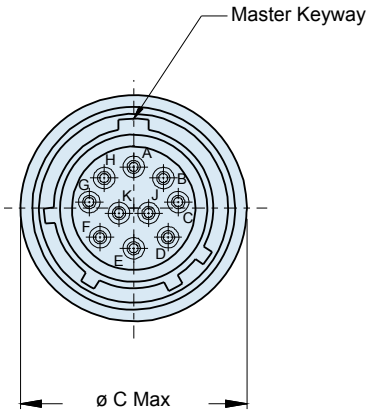

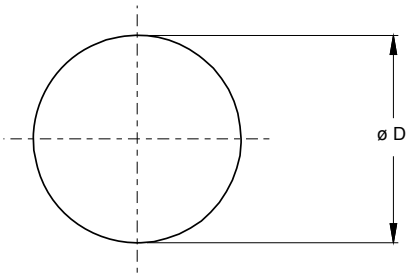

Recommended Panel Cut-Out

© 2010 Glenair, Inc.

GLENAIR, INC. • 1211 AIR WAY • GLENDALE, CA 91201-2497 • 818-247-6000 • FAX 818-500-9912
www.glenair.com E-Mail: sales@glenair.com

D38999/27
Weld Mount Hermetic Receptacle
MIL-DTL-38999 Series III

How To Order: *MS*

Basic Specification	Connector Material / Finish	Insert Arrangement	Alternate Key Position
D38999	*N - CRES, Nickel* *Y - CRES, Passivated*	Per MIL-STD-1560; See Pages B2 - B4	*A, B, C, D, E* (*N* = Normal)

D38999	/27	Y	B	35	P	N

Shell Style
/27 - Weld Mount

Shell Size
A - 9
B - 11
C - 13
D - 15
E - 17
F - 19
G - 21
H - 23
J - 25

Contact Termination
P - Pin, Solder Cup
X - Pin, Eyelet
C - Pin, PCB Flex Feedthrough
S - Socket, Solder Cup
Z - Socket, Eyelet
D - Socket, PCB Flex Feedthrough

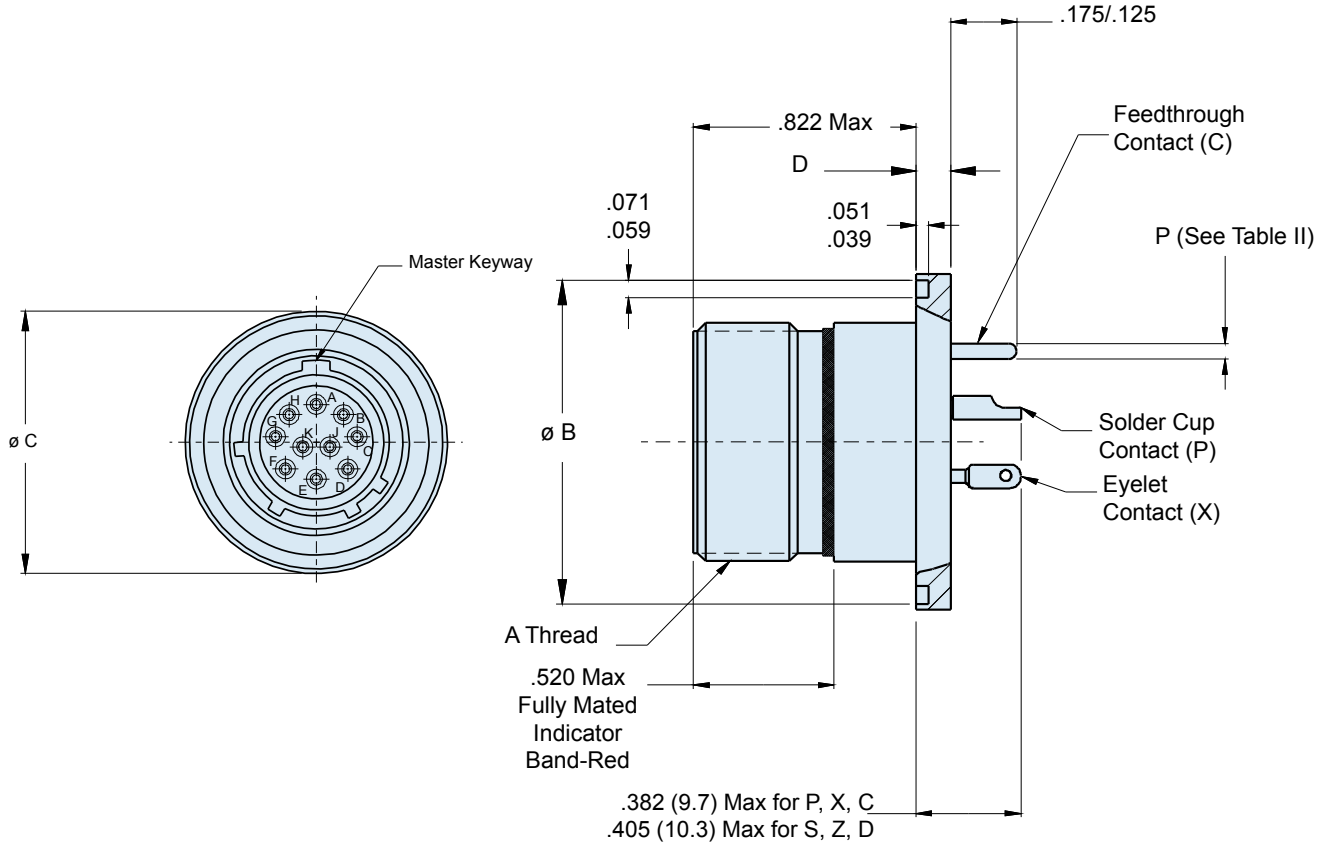

Consult Factory for Recommended Panel Cutout Dimensions

© 2010 Glenair, Inc.

D38999/27
Weld Mount Hermetic Receptacle
MIL-DTL-38999 Series III

How To Order: *Commercial*

Connector Series
233 - Series III Type

Shell Style
H8 - Hermetic Weld Mount

Shell Size
09,11,13,15,17,19,21,23,25

Contact Termination
P - Pin, Solder Cup *S - Socket, Solder Cup*
X - Pin, Eyelet *Z - Socket, Eyelet*
C - Pin, PCB *D - Socket, PCB*

233 - 100 - H8 Z1 11 - 35 P N

Connector Type
100 - Hermetic Receptacle

Connector Material / Finish
ZL - CRES, Nickel
Z1 - CRES, Passivated

Insert Arrangement
Per MIL-STD-1560;
See Pages B-2 - B-4

Alternate Key Position
A, B, C, D, E
(*N* = Normal)

TABLE I: CONNECTOR DIMENSIONS

SHELL SIZE CODE	SHELL SIZE	A THREAD	Ø B	Ø C	Ø D
A	9/09	.6250-.1P-.3L-TS-2A	.941 (23.9) .929 (23.6)	.984 (25.0) .972 (24.7)	.134 (3.4) .118 (3.0)
B	11	.7500-.1P-.3L-TS-2A	1.063 (27.0) 1.051 (27.0)	1.106 (28.1) 1.094 (27.8)	.134 (3.4) .118 (3.0)
C	13	.8750-.1P-.3L-TS-2A	1.189 (30.2) 1.177 (28.9)	1.232 (31.3) 1.220 (31.0)	.134 (3.4) .118 (3.0)
D	15	1.0000-.1P-.3L-TS-2A	1.315 (33.4) 1.303 (33.1)	1.358 (34.5) 1.346 (34.2)	.134 (3.4) .118 (3.0)
E	17	1.1875-.1P-.3L-TS-2A	1.402 (35.6) 1.390 (35.3)	1.445 (36.7) 1.433 (36.4)	.134 (3.4) .118 (3.0)
F	19	1.2500-.1P-.3L-TS-2A	1.547 (39.3) 1.535 (39.0)	1.591 (40.4) 1.579 (40.1)	.134 (3.4) .118 (3.0)
G	21	1.3750-.1P-.3L-TS-2A	1.689 (42.9) 1.677 (42.6)	1.732 (44.0) 1.720 (43.7)	.134 (3.4) .118 (3.0)
H	23	1.5000-.1P-.3L-TS-2A	1.854 (47.1) 1.842 (46.8)	1.898 (48.2) 1.886 (47.4)	.165 (4.2) .149 (3.8)
J	25	1.6250-.1P-.3L-TS-2A	1.941 (49.3) 1.929 (49.0)	1.984 (50.4) 1.972 (50.1)	.165 (4.2) .149 (3.8)

TABLE II: CONTACT SIZE

PRINTED CIRCUIT TAIL CONFIGURATIONS
CONTACT STYLE C AND D

SIZE 12 AND SIZE 16

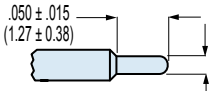

SIZE 22D AND SIZE 20

Contact Size	ø P
22D	.011 (0.28) .015 (0.38)
20	.024 (0.61) .028 (0.71)
16	.0635 (1.61) .0615 (1.56)
12	.095 (2.41) .093 (2.36)

© 2010 Glenair, Inc.

GLENAIR, INC. • 1211 AIR WAY • GLENDALE, CA 91201-2497 • 818-247-6000 • FAX 818-500-9912
www.glenair.com E-Mail: sales@glenair.com

D38999/41
Box Mount Hermetic Receptacle
MIL-DTL-38999 Series IV

How To Order: *MS*

Basic Specification	Connector Material / Finish	Insert Arrangement	Alternate Key Position
D38999	*N - CRES, Nickel* *Y - CRES, Passivated*	Per MIL-STD-1560; See Pages B2 - B4	*A, B, C, D, K, L, M, R, U* (*N* = Normal)

D38999	/41	Y	B	35	P	N

Shell Style
/41 - Box Mount

Shell Size
B - 11, *C - 13*, *D - 15*, *E - 17*, *F - 19*, *G - 21*, *H - 23*, *J - 25*

Contact Termination
P - Pin, Solder Cup
X - Pin, Eyelet
C - Pin, PCB Flex Feedthrough
S - Socket, Solder Cup
Z - Socket, Eyelet
D - Socket, PCB Flex Feedthrough

TABLE II: CONTACT SIZE

PRINTED CIRCUIT TAIL CONFIGURATIONS
CONTACT STYLE C AND D

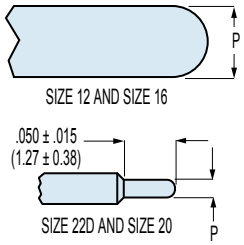

Contact Size	ø P
22D	.011 (0.28) .015 (0.38)
20	.024 (0.61) .028 (0.71)
16	.0635 (1.61) .0615 (1.56)
12	.095 (2.41) .093 (2.36)

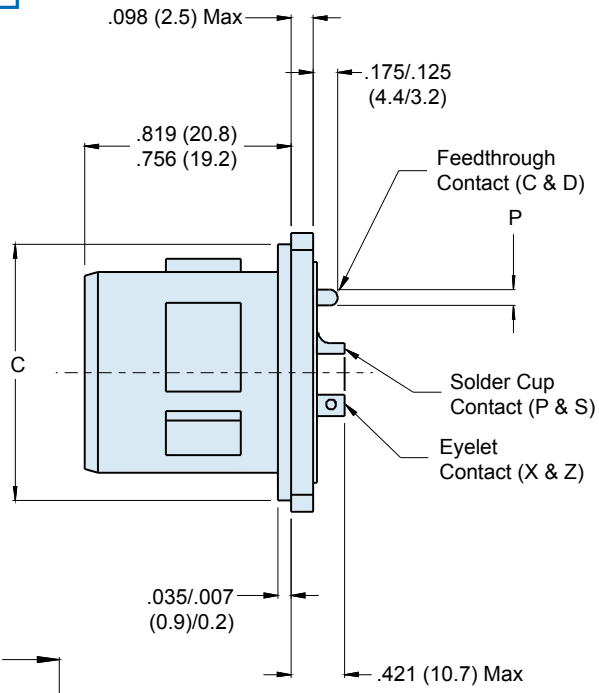

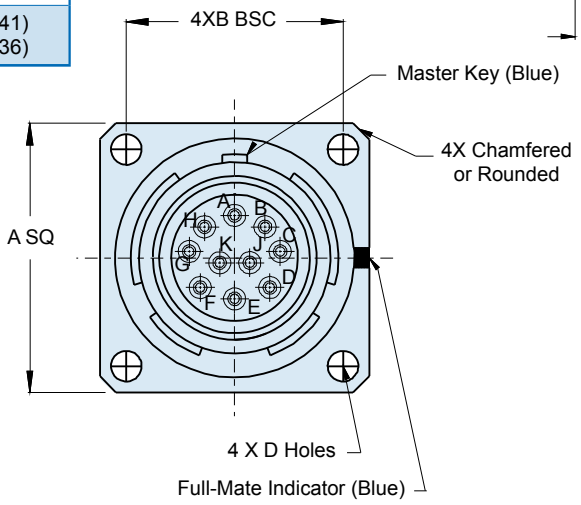

© 2010 Glenair, Inc.
CAGE CODE 06324
Printed in U.S.A.

D38999/41
Box Mount Hermetic Receptacle
MIL-DTL-38999 Series IV

How To Order: *Commercial*

Connector Series
234 - Series IV Type

Shell Style
H2 - Hermetic Box Mount

Shell Size
11,13,15,17,19,21,23,25

Contact Termination
P - Pin, Solder Cup *S - Socket, Solder Cup*
X - Pin, Eyelet *Z - Socket, Eyelet*
C - Pin, PCB *D - Socket, PCB*

234 - 100 - H2 Z1 11 - 35 P N

Connector Type
100 - Hermetic Receptacle

Connector Material / Finish
ZL - CRES, Nickel
Z1 - CRES, Passivated

Insert Arrangement
Per MIL-STD-1560;
See Pages B-2 - B-4

Alternate Key Position
A, B, C, D, K, L, M, R, U
(*N* = Normal)

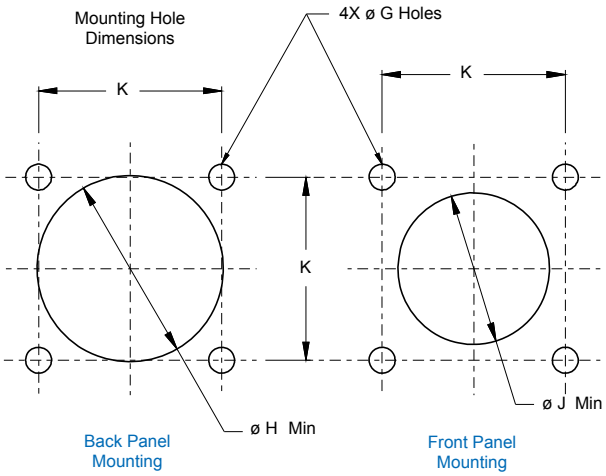

TABLE I: CONNECTOR DIMENSIONS

SHELL SIZE CODE	SHELL SIZE	A SQ	B BSC	C DIA	D DIA	øG HOLES ±.005(0.1)	ø H MIN	ø J MIN	K ±.005(0.1)
B	11	1.051(26.7) 1.008(25.6)	.812(20.6)	.793(20.1) .778(19.8)	.138(3.5) .122(3.1)	.128(3.3)	.781(19.8)	.625(15.9)	.812(20.6)
C	13	1.145(29.1) 1.102(28.0)	.906(23.0)	.919(23.3) .904(23.0)	.138(3.5) .122(3.1)	.128(3.3)	.921(23.4)	.750(19.1)	.906(23.0)
D	15	1.240(31.5) 1.197(30.4)	.969(24.6)	1.044(26.5) 1.029(26.1)	.138(3.5) .122(3.1)	.128(3.3)	1.047(26.6)	.906(23.0)	.968(24.6)
E	17	1.334(33.9) 1.291(32.8)	1.062(27.0)	1.170(29.7) 1.155(29.3)	.138(3.5) .122(3.1)	.128(3.3)	1.218(30.9)	1.016(25.8)	1.062(27.0)
F	19	1.460(37.1) 1.417(36.0)	1.156(29.4)	1.294(32.9) 1.279(32.5)	.138(3.5) .122(3.1)	.128(3.3)	1.296(32.9)	1.142(29.0)	1.156(29.4)
G	21	1.583(40.2) 1.539(39.1)	1.250(31.8)	1.419(36.0) 1.404(35.7)	.138(3.5) .122(3.1)	.128(3.3)	1.421(36.1)	1.266(32.2)	1.250(31.8)
H	23	1.709(43.4) 1.665(42.3)	1.375(34.9)	1.544(39.2) 1.529(38.8)	.157(4.0) .142(3.6)	.154(3.9)	1.546(39.3)	1.375(34.9)	1.375(34.9)
J	25	1.835(46.6) 1.791(45.5)	1.500(38.1)	1.670(42.4) 1.654(42.0)	.157(4.0) .142(3.6)	.154(3.9)	1.672(42.5)	1.484(37.7)	1.500(38.1)

© 2010 Glenair, Inc. CAGE CODE 06324 Printed in U.S.A.

D38999/43
Jam Nut Mount Hermetic Receptacle
MIL-DTL-38999 Series IV

How To Order: *MS*

Basic Specification
D38999

Connector Material / Finish
N - CRES, Nickel
Y - CRES, Passivated

Insert Arrangement
Per MIL-STD-1560;
See Pages B2 - B4

Alternate Key Position
A, B, C, D, K, L, M, R, U
(*N* = Normal)

D38999	/43	Y	B	35	P	N

Shell Style
/43 - Jam Nut Mount

Shell Size

B - 11	*F - 19*
C - 13	*G - 21*
D - 15	*H - 23*
E - 17	*J - 25*

Contact Termination

P - Pin, Solder Cup	*S - Socket, Solder Cup*
X - Pin, Eyelet	*Z - Socket, Eyelet*
C - Pin, PCB Flex Feedthrough	*D - Socket, PCB Flex Feedthrough*

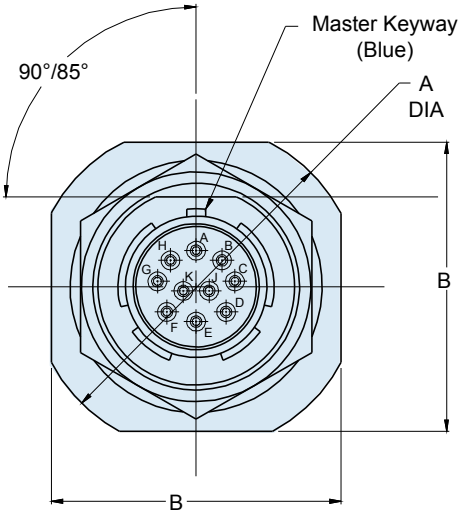

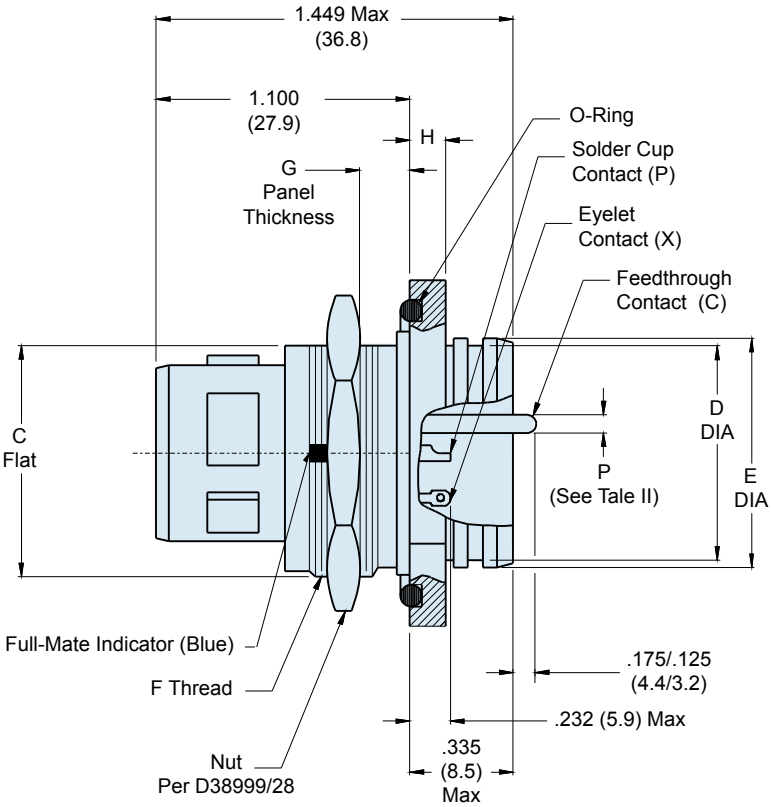

© 2010 Glenair, Inc.

GLENAIR, INC. • 1211 AIR WAY • GLENDALE, CA 91201-2497 • 818-247-6000 • FAX 818-500-9912
www.glenair.com
E-Mail: sales@glenair.com

D38999/43
Jam Nut Mount Hermetic Receptacle
MIL-DTL-38999 Series IV

Glenair®

How To Order: *Commercial*

Connector Series
234 - Series IV Type

Shell Style
H7 - Hermetic Jam Nut Mount

Shell Size
11,13,15,17,19,21,23,25

Contact Termination
P - Pin, Solder Cup *S - Socket, Solder Cup*
X - Pin, Eyelet *Z - Socket, Eyelet*
C - Pin, PCB *D - Socket, PCB*

234 - 100 - H7 Z1 11 - 35 P N

Connector Type
100 - Hermetic Receptacle

Connector Material / Finish
ZL - CRES, Nickel
Z1 - CRES, Passivated

Insert Arrangement
Per MIL-STD-1560;
See Pages B-2 - B-4

Alternate Key Position
A, B, C, D, K, L, M, R, U
(*N* = Normal)

TABLE I: CONNECTOR DIMENSIONS

SHELL SIZE CODE	SHELL SIZE	A DIA	B FLATS ±.018(0.5)	C FLAT	D DIA	E DIA ±.010(0.3)	F THREAD ISO METRIC	G ±.033(0.8)	H ±.012(0.3)
B	11	1.385(35.2) 1.362(34.6)	1.250(31.8)	.754(19.2) .745(18.9)	.733(18.6) .716(18.2)	.769(19.5)	M20 X 1.0-6g	.092(2.3)	.106(2.7)
C	13	1.511(38.4) 1.488(37.8)	1.376(35.0)	.941(23.9) .932(23.7)	.858(21.8) .839(21.3)	.899(22.8)	M25 X 1.0-6g	.092(2.3)	.106(2.7)
D	15	1.637(41.6) 1.614(41.0)	1.502(38.2)	1.065(27.1) 1.056(26.8)	.984(25.0) .968(24.6)	1.025(26.0)	M28 X 1.0-6g	.092(2.3)	.106(2.7)
E	17	1.763(44.8) 1.740(44.2)	1.624(41.2)	1.190(30.2) 1.181(30.0)	1.110(28.2) 1.091(27.7)	1.147(29.1)	M32 X 1.0-6g	.092(2.3)	.106(2.7)
F	19	1.948(49.5) 1.925(48.9)	1.813(46.1)	1.316(33.4) 1.306(33.2)	1.236(31.4) 1.220(31.0)	1.273(32.3)	M35 X 1.0-6g	.092(2.3)	.137(3.5)
G	21	2.074(52.7) 2.051(52.1)	1.939(49.3)	1.441(36.6) 1.431(36.3)	1.358(34.5) 1.342(34.1)	1.399(35.5)	M38 X 1.0-6g	.092(2.3)	.137(3.5)
H	23	2.200(55.9) 2.177(55.3)	2.061(52.3)	1.565(39.8) 1.556(39.5)	1.484(37.7) 1.468(37.3)	1.525(38.7)	M41 X 1.0-6g	.092(2.3)	.137(3.5)
J	25	2.326(59.1) 2.299(58.4)	2.187(55.5)	1.692(43.0) 1.681(42.7)	1.610(40.9) 1.594(40.5)	1.647(41.8)	M44 X 1.0-6g	.092(2.3)	.137(3.5)

TABLE I (CONTINUED): CUT-OUT DIMENSIONS

SHELL SIZE CODE	J DIA	K
B	.835 (21.21) .825 (20.96)	.771 (19.58) .761 (19.33)
C	1.020 (25.91) 1.010 (25.65)	.955 (24.26) .945 (24.00)
D	1.145 (29.08) 1.133 (28.78)	1.085 (27.56) 1.075 (27.31)
E	1.270 (32.26) 1.260 (32.00)	1.210 (30.73) 1.200 (30.48)
F	1.395 (35.43) 1.385 (35.18)	1.335 (33.91) 1.325 (33.66)
G	1.520 (38.61) 1.510 (38.35)	1.460 (37.08) 1.450 (36.83)
H	1.645 (41.78) 1.635 (41.53)	1.585 (40.26) 1.575 (40.01)
J	1.770 (44.96) 1.760 (44.70)	1.710 (43.43) 1.700 (43.18)

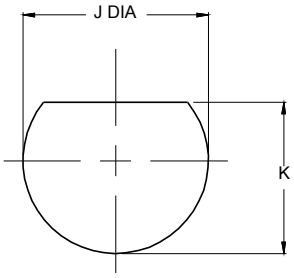

Recommended Panel Cut-Out

TABLE II: CONTACT SIZE

PRINTED CIRCUIT TAIL CONFIGURATIONS
CONTACT STYLE C AND D

SIZE 12 AND SIZE 16

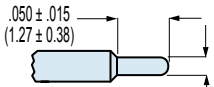

SIZE 22D AND SIZE 20 P

Contact Size	ø P
22D	.011 (0.28) .015 (0.38)
20	.024 (0.61) .028 (0.71)
16	.0635 (1.61) .0615 (1.56)
12	.095 (2.41) .093 (2.36)

© 2010 Glenair, Inc.
CAGE CODE 06324
Printed in U.S.A.

D38999/45
Solder Mount Hermetic Receptacle
MIL-DTL-38999 Series IV

How To Order: *MS*

D38999	/45	Y	B	35	P	N

Basic Specification
D38999

Connector Material / Finish
N - CRES, Nickel
Y - CRES, Passivated

Insert Arrangement
Per MIL-STD-1560;
See Pages B2 - B4

Alternate Key Position
A, B, C, D, K, L, M, R, U
(*N* = Normal)

Shell Style
/45 - Solder Mount

Shell Size

B - 11	*F - 19*
C - 13	*G - 21*
D - 15	*H - 23*
E - 17	*J - 25*

Contact Termination

P - Pin, Solder Cup	*S - Socket, Solder Cup*
X - Pin, Eyelet	*Z - Socket, Eyelet*
C - Pin, PCB Flex Feedthrough	*D - Socket, PCB Flex Feedthrough*

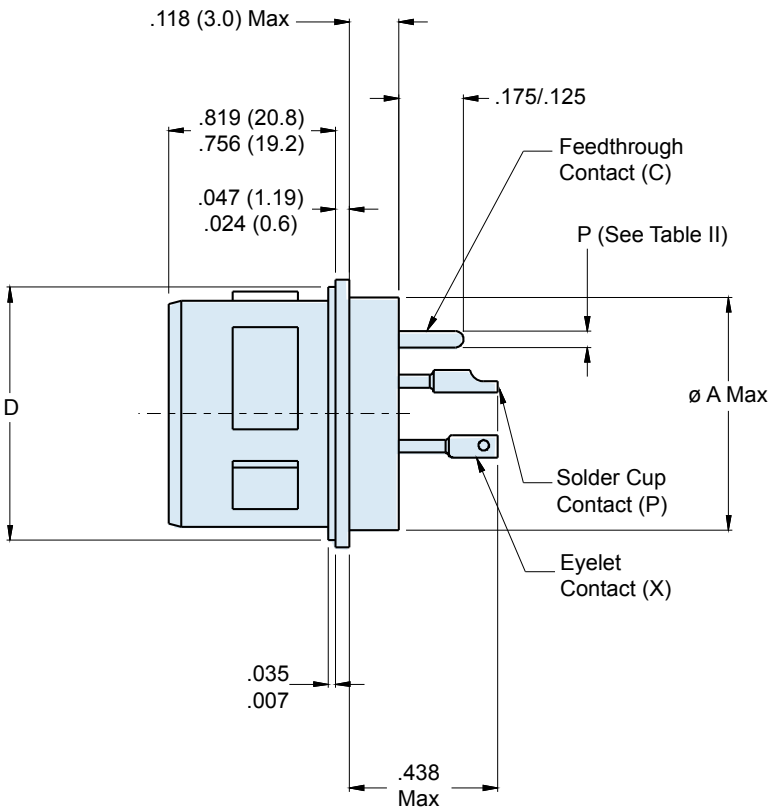

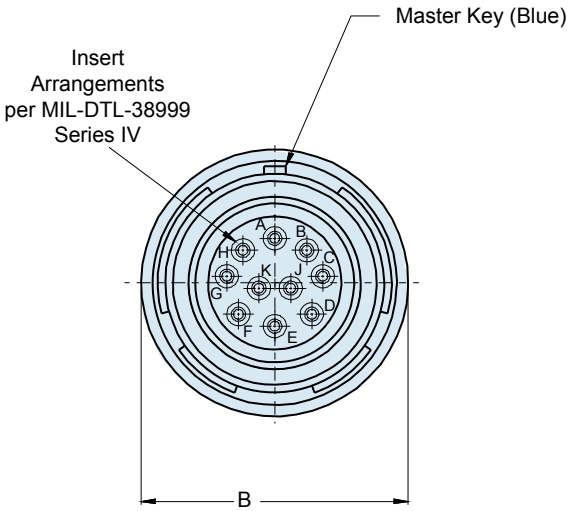

© 2010 Glenair, Inc. CAGE CODE 06324 Printed in U.S.A.

D38999/45
Solder Mount Hermetic Receptacle
MIL-DTL-38999 Series IV

Glenair®

How To Order: *Commercial*

Connector Series
234 - Series IV Type

Shell Style
H5 - Hermetic Solder Mount

Shell Size
11,13,15,17,19,21,23,25

Contact Termination
P - Pin, Solder Cup *S - Socket, Solder Cup*
X - Pin, Eyelet *Z - Socket, Eyelet*
C - Pin, PCB *D - Socket, PCB*

234 - 100 - H5 Z1 11 - 35 P N

Connector Type
100 - Hermetic Receptacle

Connector Material / Finish
ZL - CRES, Nickel
Z1 - CRES, Passivated

Insert Arrangement
Per MIL-STD-1560;
See Pages B-2 - B-4

Alternate Key Position
A, B, C, D, K, L, M, R, U
(*N* = Normal)

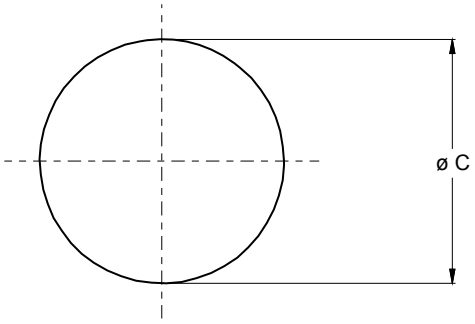

Recommended Panel Cut-Out

TABLE I: CONNECTOR DIMENSIONS

SHELL SIZE CODE	SHELL SIZE	ø A MAX	ø B MAX	ø C ±.005(0.1)	D
B	11	.783(19.9)	.862(21.9)	.789(20.0)	.793(20.1) .778(19.8)
C	13	.909(23.1)	.988(25.1)	.914(23.2)	.919(23.3) .904(23.0)
D	15	1.035(26.3)	1.110(28.2)	1.038(26.4)	1.044(26.5) 1.028(26.1)
E	17	1.157(29.4)	1.236(31.4)	1.164(29.6)	1.170(29.7) 1.155(29.3)
F	19	1.252(31.8)	1.331(33.8)	1.258(32.0)	1.294(32.9) 1.279(32.5)
G	21	1.378(35.0)	1.457(37.0)	1.383(35.1)	1.419(36.0) 1.404(35.7)
H	23	1.504(38.2)	1.583(40.2)	1.508(38.3)	1.544(39.2) 1.528(38.8)
J	25	1.630(41.4)	1.705(43.3)	1.643(41.7)	1.670(42.4) 1.654(42.0)

TABLE II: CONTACT SIZE

PRINTED CIRCUIT TAIL CONFIGURATIONS
CONTACT STYLE C AND D

SIZE 12 AND SIZE 16

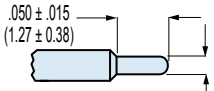

SIZE 22D AND SIZE 20

Contact Size	ø P
22D	.011 (0.28) .015 (0.38)
20	.024 (0.61) .028 (0.71)
16	.0635 (1.61) .0615 (1.56)
12	.095 (2.41) .093 (2.36)

© 2010 Glenair, Inc.

GLENAIR, INC. • 1211 AIR WAY • GLENDALE, CA 91201-2497 • 818-247-6000 • FAX 818-500-9912
www.glenair.com E-Mail: sales@glenair.com

D38999/48
Weld Mount Hermetic Receptacle
MIL-DTL-38999 Series IV

How To Order: *MS*

Basic Specification
D38999

Connector Material / Finish
N - CRES, Nickel
Y - CRES, Passivated

Insert Arrangement
Per MIL-STD-1560;
See Pages B2 - B4

Alternate Key Position
A, B, C, D, K, L, M, R, U
(*N* = Normal)

D38999	/48	Y	B	35	P	N

Shell Style
/48 - Weld Mount

Shell Size

B - 11	*F - 19*
C - 13	*G - 21*
D - 15	*H - 23*
E - 17	*J - 25*

Contact Termination

P - Pin, Solder Cup	*S - Socket, Solder Cup*
X - Pin, Eyelet	*Z - Socket, Eyelet*
C - Pin, PCB Flex Feedthrough	*D - Socket, PCB Flex Feedthrough*

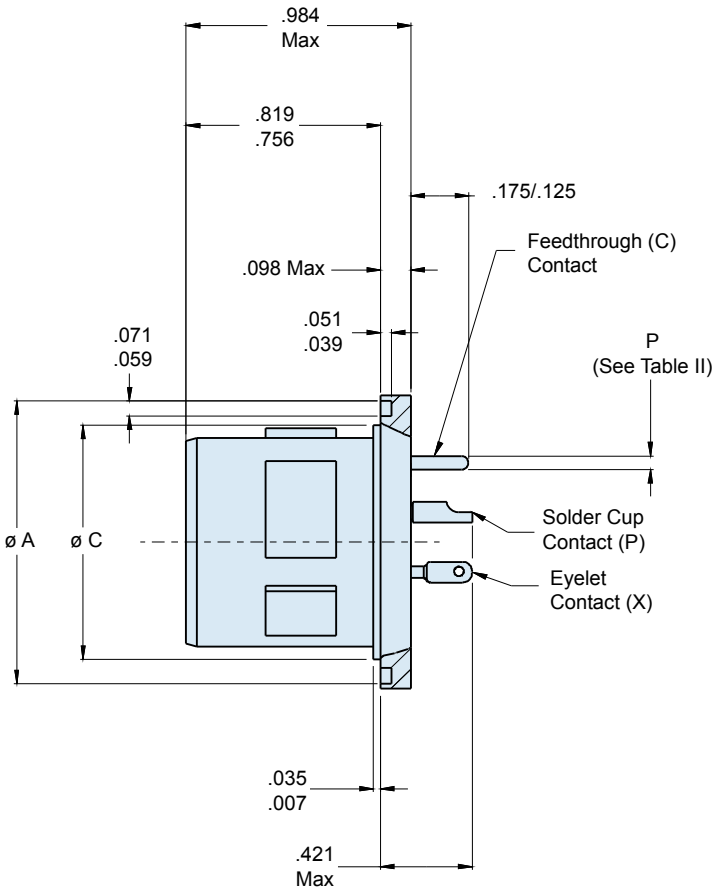

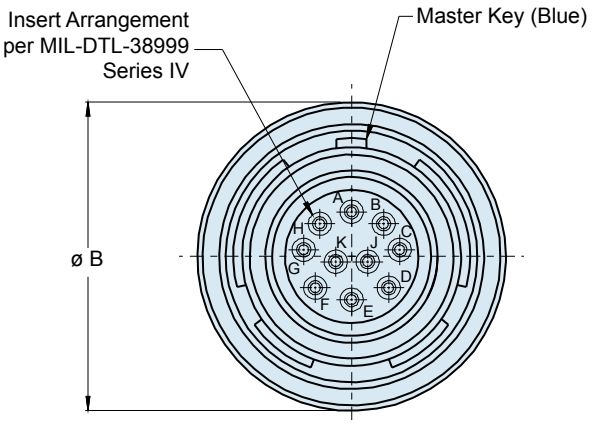

Consult Factory for Recommended Panel Cutout Dimensions

© 2010 Glenair, Inc.

GLENAIR, INC. • 1211 AIR WAY • GLENDALE, CA 91201-2497 • 818-247-6000 • FAX 818-500-9912
www.glenair.com
E-Mail: sales@glenair.com

D38999/48
Weld Mount Hermetic Receptacle
MIL-DTL-38999 Series IV

How To Order: *Commercial*

Connector Series
234 - Series IV Type

Shell Style
H8 - Hermetic Weld Mount

Shell Size
11,13,15,17,19,21,23,25

Contact Termination
P - Pin, Solder Cup *S - Socket, Solder Cup*
X - Pin, Eyelet *Z - Socket, Eyelet*
C - Pin, PCB *D - Socket, PCB*

234 - 100 - H8 Z1 11 - 35 P N

Connector Type
100 - Hermetic Receptacle

Connector Material / Finish
ZL - CRES, Nickel
Z1 - CRES, Passivated

Insert Arrangement
Per MIL-STD-1560;
See Pages B-2 - B-4

Alternate Key Position
A, B, C, D, K, L, M, R, U
(*N* = Normal)

TABLE I: CONNECTOR DIMENSIONS

SHELL SIZE CODE	SHELL SIZE	ø A	ø B	ø C
B	11	1.035 (26.3) 1.024 (26.0)	1.106 (28.1) 1.094 (27.8)	.793 (20.1) .778 (19.8)
C	13	1.161 (29.5) 1.150 (29.2)	1.232 (31.3) 1.220 (31.0)	.919 (23.3) .904 (23.0)
D	15	1.287 (32.7) 1.276 (32.4)	1.358 (34.5) 1.346 (34.2)	1.044 (26.5) 1.029 (26.1)
E	17	1.374 (34.9) 1.362 (34.6)	1.445 (36.7) 1.433 (36.4)	1.170 (29.7) 1.155 (29.3)
F	19	1.520 (38.6) 1.508 (38.3)	1.591 (40.4) 1.579 (40.1)	1.294 (32.9) 1.279 (32.5)
G	21	1.661 (42.2) 1.650 (41.9)	1.732 (44.0) 1.720 (43.7)	1.419 (36.0) 1.404 (35.7)
H	23	1.827 (46.4) 1.815 (46.1)	1.898 (48.2) 1.886 (47.4)	1.544 (39.2) 1.529 (38.8)
J	25	1.913 (48.6) 1.902 (48.3)	1.984 (50.4) 1.972 (50.1)	1.669 (42.4) 1.654 (42.0)

TABLE II: CONTACT SIZE

PRINTED CIRCUIT TAIL CONFIGURATIONS
CONTACT STYLE C AND D

SIZE 12 AND SIZE 16

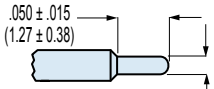

SIZE 22D AND SIZE 20

Contact Size	ø P
22D	.011 (0.28) .015 (0.38)
20	.024 (0.61) .028 (0.71)
16	.0635 (1.61) .0615 (1.56)
12	.095 (2.41) .093 (2.36)

© 2010 Glenair, Inc.

GLENAIR, INC. • 1211 AIR WAY • GLENDALE, CA 91201-2497 • 818-247-6000 • FAX 818-500-9912
www.glenair.com E-Mail: sales@glenair.com

257-333
Hermetic Jam Nut Receptacle with Crimp Removable Socket Contacts
MIL-DTL-38999 Series III Type

Shell Size
- *A - 9*
- *B - 11*
- *C - 13*
- *D - 15*
- *E - 17*
- *F - 19*
- *G - 21*
- *H - 23*
- *J - 25*

Contact Style
- *P - Pin Contacts*
- *S - Socket Contacts*

Basic Number

257-333 P 17 - 8 P A

Finish (See Note 2)

Insert Arrangement Per MIL-STD-1560; See Pages B2 - B4

Alternate Key Position *A, B, C, D or E (N for Normal)*

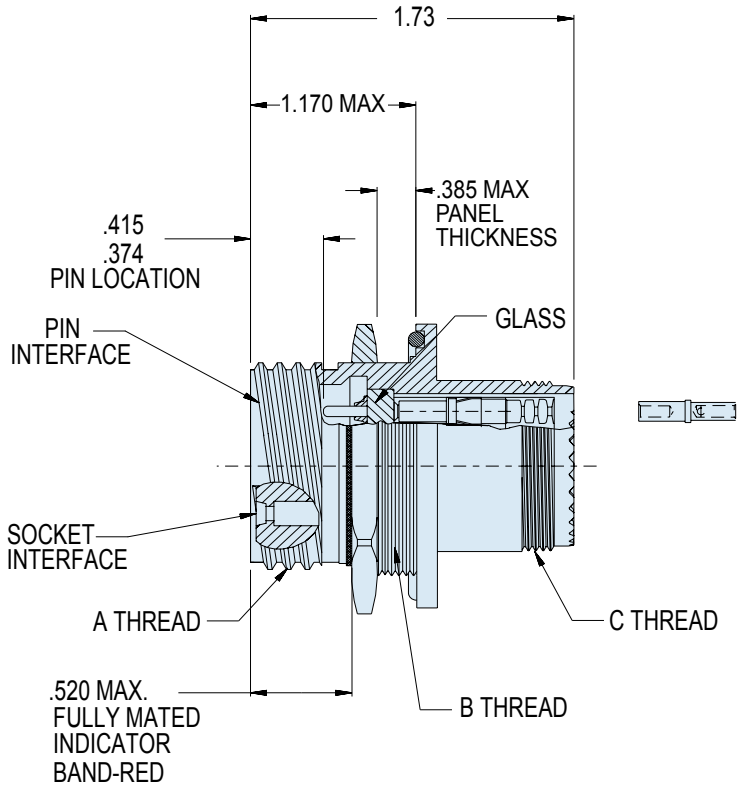

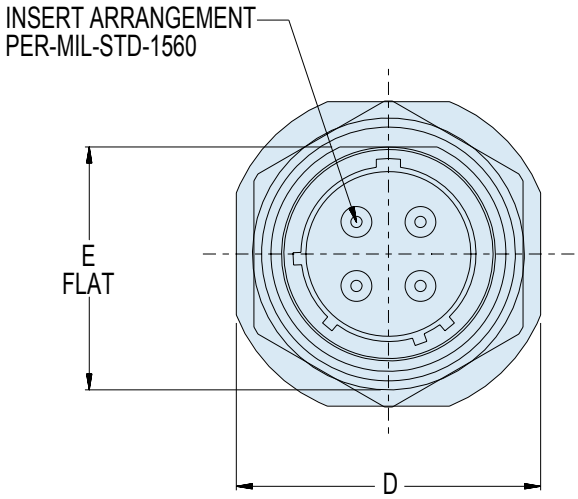

© 2010 Glenair, Inc. CAGE CODE 06324 Printed in U.S.A.

TABLE I (CONTINUED): CUT-OUT DIMENSIONS		
SHELL SIZE	K DIA ± .005 (0.1)	N ± .005 (0.1)
A	.693 (17.60)	.657 (16.70)
B	.825 (20.96)	.771 (19.59)
C	1.010 (25.65)	.955 (24.26)
D	1.135 (28.83)	1.085 (27.56)
E	1.260 (32.01)	1.210 (30.73)
F	1.385 (35.18)	1.335 (33.91)
G	1.510 (38.35)	1.460 (37.08)
H	1.635 (41.53)	1.585 (40.26)
J	1.760 (44.70)	1.710 (43.43)

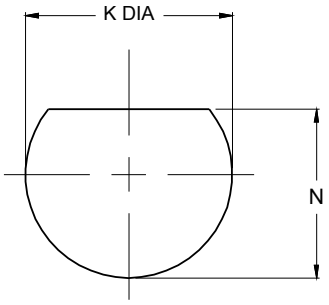

Recommended Panel Cut-Out

TABLE I: CONNECTOR DIMENSIONS						
SHELL SIZE	SHELL SIZE CODE	A THREAD	B THREAD	C THREAD	D +/- .016 (MM)	E +/-.004-.006 (MM)
9	A	.6250-.1P.3L-TS-2A	M17x1-6g 0.100R	M12x1-6g 0.100R	1.062 (2.70)	0.651 (1.65)
11	B	.7500-.1P.3L-TS-2A	M20x1-6g 0.100R	M15x1-6g 0.100R	1.252 (3.18)	0.751 (1.91)
13	C	.8750-.1P.3L-TS-2A	M25x1-6g 0.100R	M18x1-6g 0.100R	1.374 (3.49)	0.938 (2.38)
15	D	1.000-.1P.3L-TS-2A	M28x1-6g 0.100R	M22x1-6g 0.100R	1.500 (3.81)	1.062 (2.70)
17	E	1.1875-.1P.3L-TS-2A	M32x1-6g 0.100R	M25x1-6g 0.100R	1.626 (4.13)	1.187 (3.01)
19	F	1.250-.1P.3L-TS-2A	M35x1-6g 0.100R	M28x1-6g 0.100R	1.811 (4.60)	1.312 (3.33)
21	G	1.375-.1P.3L-TS-2A	M38x1-6g 0.100R	M31x1-6g 0.100R	1.937 (4.92)	1.437 (3.65)
23	H	1.500-.1P.3L-TS-2A	M41x1-6g 0.100R	M34x1-6g 0.100R	2.063 (5.24)	1.562 (3.97)
25	J	1.625-.1P.3L-TS-2A	M44x1-6g 0.100R	M37x1-6g 0.100R	2.189 (5.56)	1.687 (4.28)

APPLICATION NOTES

1. Assembly to be identified with Glenair's name and part number and date code, space permitting.
2. Material/finishes:
   Shell Receptacle, Jam Nut – CRES Passivated (Z1), CRES/NI (P)
   Pin Contact – alloy 52 / gold plated
   Socket Contact – copper alloy / gold plated
   Insulator – fused vitreous glass / N.A.
   Insulators – high grade rigid dielectric
   Seals—fluorosilicone / N.A.
3. Crimp removable socket contacts to conform to:
   MIL-C-39029/57-358 – size 16;
   MIL-C-39029/57-357 – size 20;
   and MIL-C-39029/57-354 – size 22D (supplied loose)
   Supply 1 extra contact for each size used.

© 2010 Glenair, Inc.

GLENAIR, INC. • 1211 AIR WAY • GLENDALE, CA 91201-2497 • 818-247-6000 • FAX 818-500-9912
www.glenair.com E-Mail: sales@glenair.com

Glenair MIL-DTL-38999 Type Filter Connectors

SECTION C TABLE OF CONTENTS

GLENAIR MIL-DTL-38999 TYPE FILTER CONNECTORS:

Glenair MIL-DTL-38999 Type Filter Connector Product Features.....C-1

MIL-DTL-38999 Series I Type Master How-to-Order and Reference Information.....C-2

240-381W Series I Type Wall Mount Filter Connector w/ Accessory Threads.....C-4

240-381R Series I Type Wall Mount Filter Connector w/ Crimp Removable Contacts.....C-6

240-381J Series I Type Jam Nut Mount Filter Connector.....C-8

240-381A Series I Type Sav-Con® Filtered Connector Adapter.....C-10

MIL-DTL-38999 Series II Type Master How-to-Order and Reference Information.....C-12

240-382W Series II Type Wall Mount Filter Connector.....C-14

240-382J Series II Type Jam Nut Filter Connector.....C-16

240-382A Series II Type Sav-Con® Filtered Connector Adapter.....C-18

MIL-DTL-38999 Series III Type Master How-to-Order and Reference Information.....C-20

240-383P Series III Type Filter Connector Plug.....C-22

240-383W Series III Type Wall Mount Filter Connector.....C-24

240-383J Series III Type Jam Nut Filter Connector.....C-26

240-383S Series III Type Jam Nut Filter Connector w/ Crimp Removable Contacts.....C-28

240-383D Series III Type Dual Flange Wall Mount w/ PC Tails.....C-30

240-383E Series III Type Dual Flange Jam Nut Filter Connector.....C-32

240-383R Series III Type Wall Mount Filter Connector w/ Crimp Removable Contacts.....C-34

240-383A Series III Type Sav-Con® Filtered Connector Adapter.....C-36

MIL-DTL-38999 Series IV Type Master How-to-Order and Reference Information.....C-38

240-384J Series IV Type Jam Nut Filter Connector.....C-40

240-384W Series IV Type Wall Mount Filter Connector.....C-42

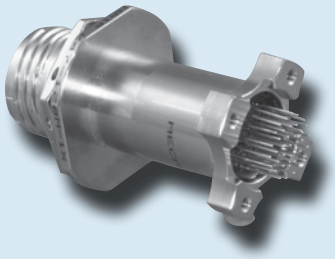

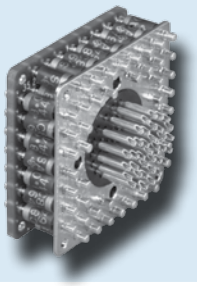

MIL-DTL-38999 Type EMI/EMP Filter Connectors

PRODUCT FEATURES

- All Filter Connector Styles Meet or Exceed Applicable Military Standards
- C and Pi Circuit Filters from 400 pF to 240,000 pF
- All Connector Series are Intermateable with Standard (Non-Filtered) Plugs and Connector Adapters
- Broadest Range of Insert Arrangements for MIL-DTL-38999 Series I, II, III and IV
- PC Tail, Solder Cup and Crimp-Contact Versions
- Space-Grade Bake-Out Processing Available
- Transient Voltage Suppression Diodes Available

The Industry's Best Short Lead-Time Source for Planar Array Type EMI/EMP Filter Connectors

Military Standard Type Series

Glenair's family of circular military standard type EMI/EMP filter connectors is designed to meet stringent military/aerospace performance requirements. Each connector series is offered with standard low-pass Pi or C filter arrays, or with customized filters to meet specific frequency and capacitance requirements. Thermally conductive epoxy protects the filter package from mechanical and heat stress and also provides a waterproof seal. All filtered receptacles are intermateable with standard plugs and connector savers, and each respective series of connectors is supplied with a range of shell styles in both environmental and hermetic configurations. Please see the "How to Order" page for available styles for each series:

MIL-DTL-38999 Series I.....C-2
MIL-DTL-38999 Series II.....C-12
MIL-DTL-38999 Series III.....C-20
MIL-DTL-38999 Series IV.....C-38

MATERIAL AND FINISHES

Contacts	Beryllium Copper Alloy, 50 µ Inch Gold Plated per ASTM B488 Type 3, Code C, Class 1,27 over Nickel Underplate per QQ-N-290 Class 2. Socket Contact Hood: Corrosion Resistant Steel, Passivated.
Insulator	Liquid crystal Polymer (LCP) per MIL-M-24519 GLP-30F, 30% Glass-Filled
Interfacial Seal, O-Ring, and Peripheral Seal	Flourosilicone Elastomer per A-A-59588, Color Blue
Shell, Jam Nut Material	Aluminum Alloy per ASTM B 211 or ASTM B 221 or Corrosion Resistant Steel per AMS-QQ-S-763
Shell and Jam Nut Finish	Code M: Electroless Nickel per AMS-C-26074 (96 Hour Salt Spray) Code NF: Olive Drab Cadmium per AMS-QQ-P-416 over Electroless Nickel (500 Hour Salt Spray) Code P: Stainless Steel with Electro-Deposited Nickel Code MT: Ni-PTFE 1000 Hour Grey™ (Nickel Flourocarbon Polymer) per MIL-DTL-38999 Rev. L
Potting Compound	Thermally Conductive Epoxy

© 2010 Glenair, Inc. CAGE CODE 06324 Printed in U.S.A.

Glenair MIL-DTL-38999 Series I Type Scoop-Proof Filter Connector with Bayonet Coupling

Master How to Order • Part Number Breakdown

Filter Connector Product Code

MIL-DTL-38999 Series I

Connector Class (See Table I)

Insert Arrangement
Per MIL-STD-1560

Termination*
***S** - Solder Cup*
***P** - PC Tail*
C** - Crimp
*Omit for Connector Adapter.
**Crimp Option applies to shell style R only.

Capacitance (See Table II)

Alternate Key Position
Per MIL-DTL-38999
A, B, C, D, N = Normal
U = Universal
(Connector Adapters Only)

240	381	J	M	15-35	P	S	P	A	C	N

Shell Style
***W** - Wall Mount*
***R** - Crimp Removable Wall Mount*
***J** - Jam Nut*
***A** - Connector Adapter*

Contact Gender
***P** - Pin*
***S** - Socket*
***PS** - Conn. Adapter (Pins, Plug Side)*
***SP** - Conn. Adapter (Sockets, Plug Side)*

Filter Type
***P** - Pi Circuit*
***C** - C Circuit*

Flange Mounting Style
***N** - Not Applicable/Mfgs. Option*
***H** - Chamfered Holes*
***C** - Clinch Nuts (4-40 UNC)*
***M** - Metric Clinch Nuts (M3)*

Consult Factory for Additional Filter Types, TVS Diodes, and other Custom Filter Connector Configurations.

TABLE I: CONNECTOR CLASS

SYM	CLASS	MATERIAL	FINISH DESCRIPTION
M	Environmental	Aluminum	Electroless Nickel
MT	Environmental	Aluminum	Ni-PTFE *1000 Hour Grey™* Nickel Fluorocarbon Polymer
NF	Environmental	Aluminum	Cadmium O.D. Over Electroless Nickel
P	Environmental	Stainless Steel	Electro-Deposited Nickel
ZN	Environmental	Aluminum	Zinc-Nickel Over Electroless Nickel

TABLE II: CAPACITOR ARRAY CODE CAPACITANCE RANGE

CLASS	PI - CIRCUIT (pF)	C - CIRCUIT (pF)
X*	160,000 - 240,000	80,000 - 120,000
Y*	80,000 - 120,000	40,000 - 60,000
Z*	60,000 - 90,000	30,000 - 45,000
A	38,000 - 56,000	19,000 - 28,000
B	32,000 - 45,000	16,000 - 22,500
C	18,000 - 33,000	9,000 - 16,500
D	8,000 - 12,000	4,000 - 6,000
E	3,300 - 5,000	1,650 - 2,500
F	800 - 1,300	400 - 650
G	400 - 600	200 - 300

* Reduced DWV – Please consult factory.

© 2010 Glenair, Inc.

GLENAIR, INC. • 1211 AIR WAY • GLENDALE, CA 91201-2497 • 818-247-6000 • FAX 818-500-9912
www.glenair.com E-Mail: sales@glenair.com

Glenair MIL-DTL-38999 Series I Type Scoop-Proof Filter Connector with Bayonet Coupling

Reference Information

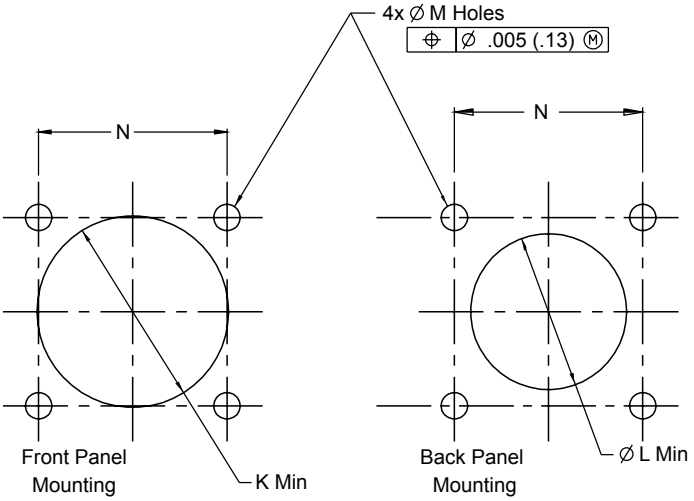

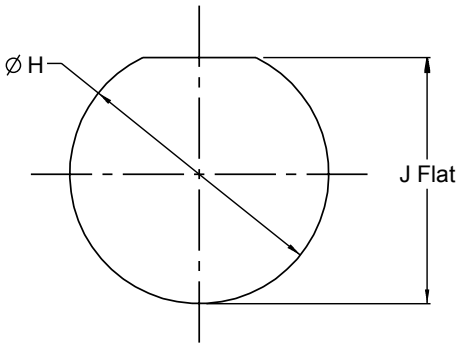

MIL-DTL-38999 Series I Square Flange Panel Cutouts

Shell Size Code	Shell Size	⌀ K Min	⌀ L Min	M Holes	N BSC
A	09	.656 (16.7)	.516 (13.1)	.133 (3.4) .123 (3.1)	.719 (18.3)
B	11	.796 (20.2)	.625 (15.9)	.133 (3.4) .123 (3.1)	.812 (20.6)
C	13	.922 (23.4)	.750 (19.1)	.133 (3.4) .123 (3.1)	.906 (23.0)
D	15	1.047 (26.6)	.906 (23.0)	.133 (3.4) .123 (3.1)	.969 (24.6)
E	17	1.219 (31.0)	1.016 (25.8)	.133 (3.4) .123 (3.1)	1.062 (27.0)
F	19	1.297 (32.9)	1.141 (29.0)	.133 (3.4) .123 (3.1)	1.156 (29.4)
G	21	1.422 (36.1)	1.266 (32.2)	.133 (3.4) .123 (3.1)	1.250 (31.8)
H	23	1.547 (39.3)	1.375 (34.9)	.159 (4.0) .149 (3.8)	1.375 (34.9)
J	25	1.672 (42.5)	1.484 (37.7)	.155 (3.9) .145 (3.7)	1.500 (38.1)

MIL-DTL-38999 Series I Jam Nut Panel Cutout

SHELL SIZE CODE	SHELL SIZE	Ø H	J
A	09	.710 (18.0) .700 (17.8)	.670 (17.0) .660 (16.8)
B	11	.835 (21.2) .825 (21.0)	.771 (19.6) .761 (19.3)
C	13	1.020 (25.9) 1.010 (25.7)	.955 (24.3) .945 (24.0)
D	15	1.145 (29.1) 1.135 (28.8)	1.085 (27.6) 1.075 (27.3)
E	17	1.270 (32.3) 1.260 (32.0)	1.210 (30.7) 1.200 (30.5)
F	19	1.395 (35.4) 1.385 (35.2)	1.335 (33.9) 1.325 (33.7)
G	21	1.520 (38.6) 1.510 (38.4)	1.460 (37.1) 1.450 (36.8)
H	23	1.645 (41.8) 1.635 (41.5)	1.585 (40.3) 1.575 (40.0)
J	25	1.770 (45.0) 1.760 (44.7)	1.710 (43.4) 1.700 (43.2)

APPLICATION NOTES

1. Materials/Finishes: Shells, Barrel, Coupling Nut, Jam Nut - See Table I
   Insulators - high grade rigid dielectric/N.A.
   Seals - Flourosilicone
   PC Tail & Solder Cup contacts: 50µ" Gold over 50µ" Nickel
2. Assembly to be identified with Glenair's name, part number, and date code - space permitting.
3. Insert Arrangement in accordance with MIL-STD-1560. (Arrangement shown for reference only)
4. EMI Circular Filter Receptacle connector designed to meet requirements of MIL-STD-2120 and MIL-DTL-38999, Series I.
5. All contacts to have identical filter value. Other filter arrangements available, contact factory.
6. Electrical Ratings: DWV- 500 VDC Min.; Standard Operating Voltage 200 Volts DC; Current Rating 5 Amps (size 22);
7. Insulation Resistance: 5000 MegOhms Min. at 200 VDC.
8. Operating Temperature -55°C to +125°C (Env Class Connectors)
9. Other filter styles (C-L, L-C, Unbalanced PI, Multi-Stage, Multi-Value) are available, please consult the factory.
10. Metric Dimensions (mm) are indicated in parentheses.

© 2010 Glenair, Inc. CAGE CODE 06324 Printed in U.S.A.

240-381W
MIL-DTL-38999 Series I Type Filter Connector
Wall Mount Receptacle

240 - 381 W P 15-35 P S P A C N

- **Filter Connector Product Code** (240)
- **MIL-DTL-38999 Series I** (381)
- **Shell Style** — *W - Wall Mount* (W)
- **Connector Class** — *(See Table I)* (P)
- **Insert Arrangement** — *IAW MIL-STD-1560* (15-35)
- **Contact Gender** — *P - Pin*, *S - Socket* (P)
- **Termination** — *S - Solder Cup*, *P - PC Tail* (S)
- **Filter Type** — *P - Pi Circuit*, *C - C Circuit* (P)
- **Flange Mounting Style** — *H - Chamfered Holes*, *C - Clinch Nuts (4-40 UNC)*, *M - Metric Clinch Nuts (M3)* (A C)
- **Capacitance** — *(See Table II)* (A)
- **Alternate Key Position** — Per MIL-DTL-38999, *A, B, C, D, N = Normal* (N)

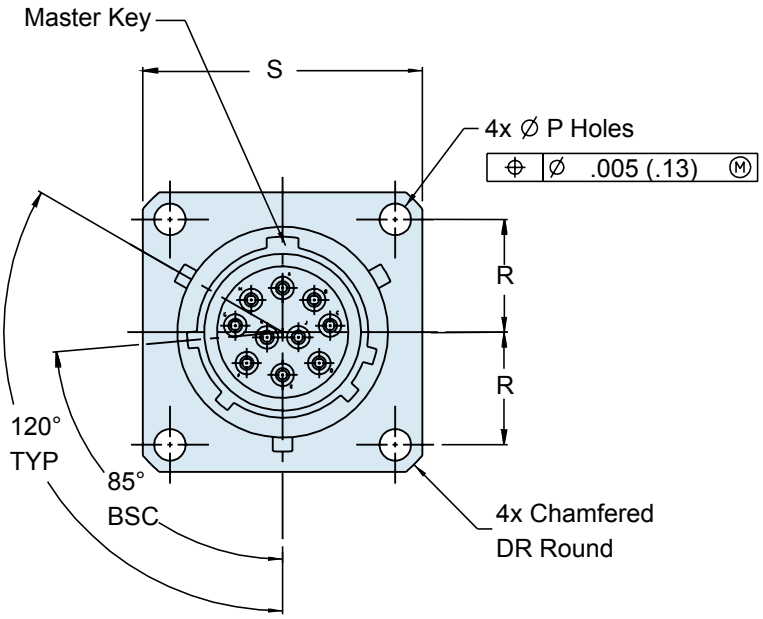

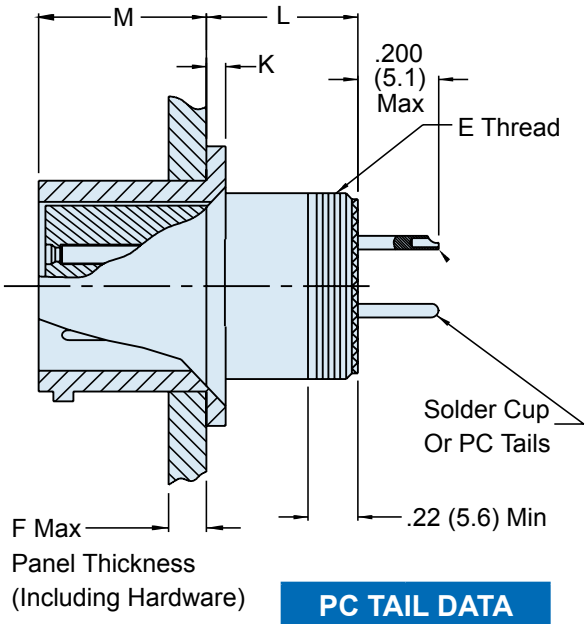

***W** - Wall Mount*

PC TAIL DATA

Contact Size	PC Tail Ø
22D	.020 .018
20	.024 .029
16	.038 .042

© 2010 Glenair, Inc. CAGE CODE 06324 Printed in U.S.A.

240-381W
MIL-DTL-38999 Series I Type Filter Connector
Wall Mount Receptacle

Glenair®

MIL-DTL-38999 Series I Square Flange Panel Cutouts					
Shell Size Code	Shell Size	⌀ K Min	⌀ L Min	M Holes	N BSC
A	09	.656 (16.7)	.516 (13.1)	.133 (3.4) .123 (3.1)	.719 (18.3)
B	11	.796 (20.2)	.625 (15.9)	.133 (3.4) .123 (3.1)	.812 (20.6)
C	13	.922 (23.4)	.750 (19.1)	.133 (3.4) .123 (3.1)	.906 (23.0)
D	15	1.047 (26.6)	.906 (23.0)	.133 (3.4) .123 (3.1)	.969 (24.6)
E	17	1.219 (31.0)	1.016 (25.8)	.133 (3.4) .123 (3.1)	1.062 (27.0)
F	19	1.297 (32.9)	1.141 (29.0)	.133 (3.4) .123 (3.1)	1.156 (29.4)
G	21	1.422 (36.1)	1.266 (32.2)	.133 (3.4) .123 (3.1)	1.250 (31.8)
H	23	1.547 (39.3)	1.375 (34.9)	.159 (4.0) .149 (3.8)	1.375 (34.9)
J	25	1.672 (42.5)	1.484 (37.7)	.155 (3.9) .145 (3.7)	1.500 (38.1)

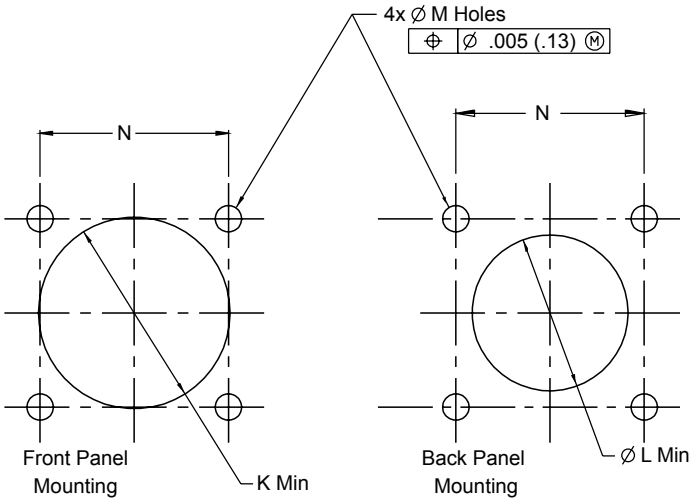

TABLE I: CONNECTOR CLASS			
SYM	CLASS	MATERIAL	FINISH DESCRIPTION
M	Environmental	Aluminum	Electroless Nickel
MT	Environmental	Aluminum	Ni-PTFE *1000 Hour Grey™* Nickel Fluorocarbon Polymer
NF	Environmental	Aluminum	Cadmium O.D. Over Electroless Nickel
P	Environmental	Stainless Steel	Electro-Deposited Nickel
ZN	Environmental	Aluminum	Zinc-Nickel Over Electroless Nickel

TABLE II: CAPACITOR ARRAY CODE CAPACITANCE RANGE		
CLASS	PI - CIRCUIT (pF)	C - CIRCUIT (pF)
X*	160,000 - 240,000	80,000 - 120,000
Y*	80,000 - 120,000	40,000 - 60,000
Z*	60,000 - 90,000	30,000 - 45,000
A	38,000 - 56,000	19,000 - 28,000
B	32,000 - 45,000	16,000 - 22,500
C	18,000 - 33,000	9,000 - 16,500
D	8,000 - 12,000	4,000 - 6,000
E	3,300 - 5,000	1,650 - 2,500
F	800 - 1,300	400 - 650
G	400 - 600	200 - 300

* Reduced DWV – Please consult factory.

DIMENSIONS								
SHELL SIZE	E THREADS	F MAX	K + .015 (.4) - .000 (0)	L MAX	M + .000 (0) - .005 (.13)	⌀ P + .010 (.3) - .005 (.13)	R BSC	S +/- .020 (5.1)
9	.6875-24 UNEF-2A	.234 (5.9)	.085 (2.2)	.469 (11.9)	.820 (20.8)	.128 (3.3)	.3595 (9.1)	.938 (23.8)
11	.8125-20 UNEF-2A	.234 (5.9)	.085 (2.2)	.469 (11.9)	.820 (20.8)	.128 (3.3)	.406 (10.3)	1.031 (26.2)
13	.9375-20 UNEF-2A	.234 (5.9)	.085 (2.2)	.469 (11.9)	.820 (20.8)	.128 (3.3)	.453 (11.5)	1.125 (28.6)
15	1.0625-18 UNEF-2A	.234 (5.9)	.085 (2.2)	.469 (11.9)	.820 (20.8)	.128 (3.3)	.4845 (12.3)	1.219 (31.0)
17	1.1875-18 UNEF-2A	.234 (5.9)	.085 (2.2)	.469 (11.9)	.820 (20.8)	.128 (3.3)	.531 (13.5)	1.312 (33.3)
19	1.3125-18 UNEF-2A	.234 (5.9)	.085 (2.2)	.469 (11.9)	.820 (20.8)	.128 (3.3)	.578 (14.7)	1.438 (36.5)
21	1.4375-10 UNEF-2A	.204 (5.2)	.115 (2.9)	.500 (12.7)	.820 (20.8)	.128 (3.3)	.625 (15.9)	1.562 (39.7)
23	1.5625-18 UNEF-2A	.204 (5.2)	.115 (2.9)	.500 (12.7)	.790 (20.1)	.147 (3.7)	.6875 (17.5)	1.688 (42.9)
25	1.6875-18 UNEF-2A	.193 (4.9)	.115 (2.9)	.500 (12.7)	.790 (20.1)	.147 (3.7)	.750 (19.1)	1.688 (42.9)

© 2010 Glenair, Inc. CAGE CODE 06324 Printed in U.S.A.

240-381R
MIL-DTL-38999 Series I Type Filter Connector
Wall Mount Receptacle
with Crimp Removable Socket Contacts

MIL-DTL-38999 Series I

Filter Connector Product Code

Contact Gender
P - Pin
S - Socket

Insert Arrangement
IAW MIL-STD-1560

Filter Type
P - Pi Circuit
C - C Circuit

Capacitance
(See Table II)

Alternate Key Position
Per MIL-DTL-38999
A, B, C, D, N = Normal

240	-	381	R	P	15-35	P	C	P	A	C	N

Shell Style
R - Crimp Removable Wall Mount

Connector Class
(See Table I)

Termination
C - Crimp

Flange Mounting Style
H - Chamfered Holes
C - Clinch Nuts (4-40 UNC)
M - Metric Clinch Nuts (M3)

NOTE: Crimp removable socket contacts to conform to MIL-C-39029/57-358, Size 16, MIL-C-39029/57-357 Size 20, and MIL-C-39029/57-354 Size 22D (Supplied loose).

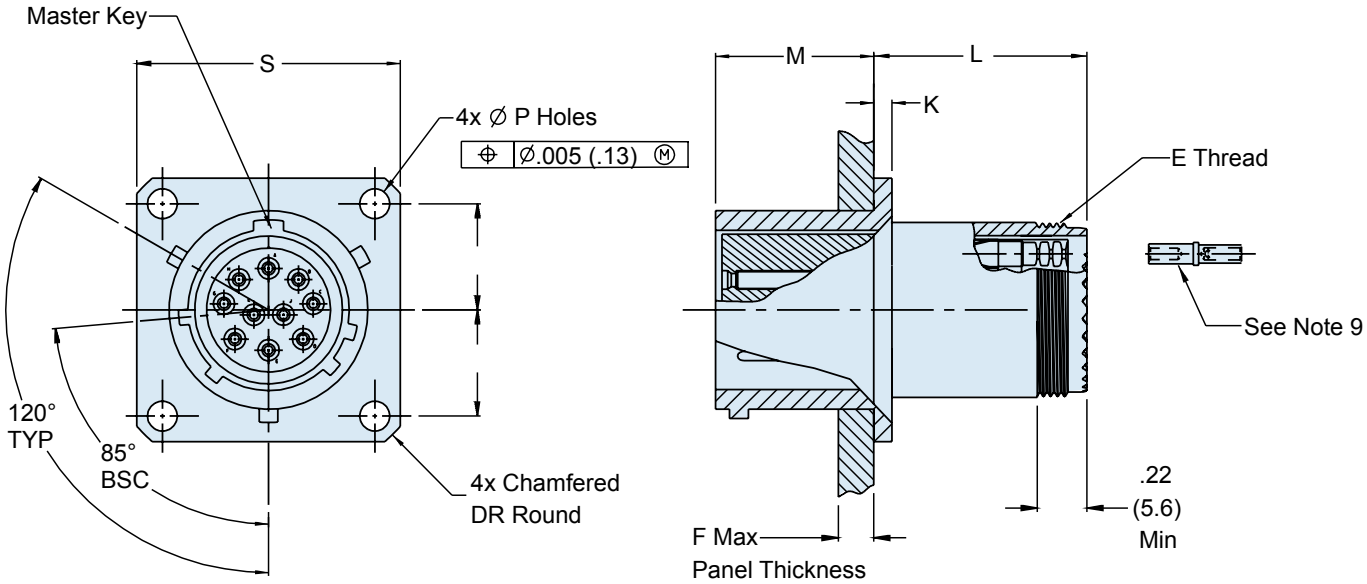

***R** - Crimp Removable Wall Mount*

© 2010 Glenair, Inc.

240-381R
MIL-DTL-38999 Series I Type Filter Connector
Wall Mount Receptacle
with Crimp Removable Socket Contacts

Glenair®

MIL-DTL-38999 Series I Square Flange Panel Cutouts

Shell Size Code	Shell Size	⌀ K Min	⌀ L Min	M Holes	N BSC
A	09	.656 (16.7)	.516 (13.1)	.133 (3.4) .123 (3.1)	.719 (18.3)
B	11	.796 (20.2)	.625 (15.9)	.133 (3.4) .123 (3.1)	.812 (20.6)
C	13	.922 (23.4)	.750 (19.1)	.133 (3.4) .123 (3.1)	.906 (23.0)
D	15	1.047 (26.6)	.906 (23.0)	.133 (3.4) .123 (3.1)	.969 (24.6)
E	17	1.219 (31.0)	1.016 (25.8)	.133 (3.4) .123 (3.1)	1.062 (27.0)
F	19	1.297 (32.9)	1.141 (29.0)	.133 (3.4) .123 (3.1)	1.156 (29.4)
G	21	1.422 (36.1)	1.266 (32.2)	.133 (3.4) .123 (3.1)	1.250 (31.8)
H	23	1.547 (39.3)	1.375 (34.9)	.159 (4.0) .149 (3.8)	1.375 (34.9)
J	25	1.672 (42.5)	1.484 (37.7)	.155 (3.9) .145 (3.7)	1.500 (38.1)

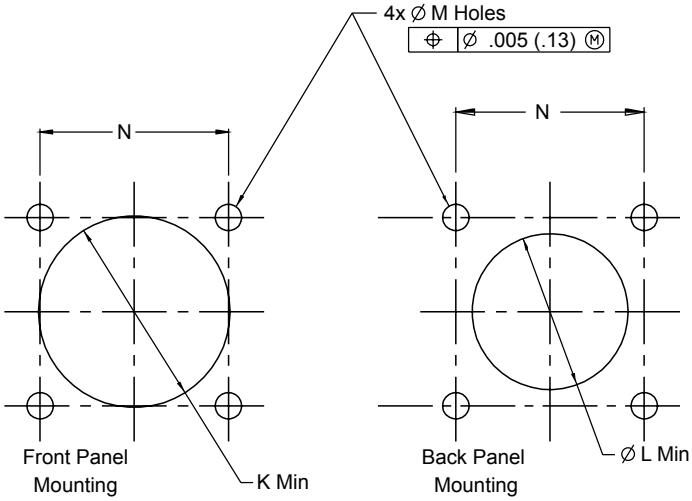

TABLE I: CONNECTOR CLASS

SYM	CLASS	MATERIAL	FINISH DESCRIPTION
M	Environmental	Aluminum	Electroless Nickel
MT	Environmental	Aluminum	Ni-PTFE *1000 Hour Grey™* Nickel Fluorocarbon Polymer
NF	Environmental	Aluminum	Cadmium O.D. Over Electroless Nickel
P	Environmental	Stainless Steel	Electro-Deposited Nickel
ZN	Environmental	Aluminum	Zinc-Nickel Over Electroless Nickel

TABLE II: CAPACITOR ARRAY CODE CAPACITANCE RANGE

CLASS	PI - CIRCUIT (pF)	C - CIRCUIT (pF)
X*	160,000 - 240,000	80,000 - 120,000
Y*	80,000 - 120,000	40,000 - 60,000
Z*	60,000 - 90,000	30,000 - 45,000
A	38,000 - 56,000	19,000 - 28,000
B	32,000 - 45,000	16,000 - 22,500
C	18,000 - 33,000	9,000 - 16,500
D	8,000 - 12,000	4,000 - 6,000
E	3,300 - 5,000	1,650 - 2,500
F	800 - 1,300	400 - 650
G	400 - 600	200 - 300

* Reduced DWV – Please consult factory.

DIMENSIONS

SHELL SIZE	E THREADS	F MAX	K + .015 (.4) - .000 (0)	L MAX	M + .000 (0) - .005 (.13)	⌀ P + .010 (.3) - .005 (.13)	R BSC	S +/- .020 (5.1)
9	.6875-24 UNEF-2A	.234 (5.9)	.085 (2.2)	1.170 (29.7)	.820 (20.8)	.128 (3.3)	.3595 (9.1)	.938 (23.8)
11	.8125-20 UNEF-2A	.234 (5.9)	.085 (2.2)	1.170 (29.7)	.820 (20.8)	.128 (3.3)	.406 (10.3)	1.031 (26.2)
13	.9375-20 UNEF-2A	.234 (5.9)	.085 (2.2)	1.170 (29.7)	.820 (20.8)	.128 (3.3)	.453 (11.5)	1.125 (28.6)
15	1.0625-18 UNEF-2A	.234 (5.9)	.085 (2.2)	1.170 (29.7)	.820 (20.8)	.128 (3.3)	.4845 (12.3)	1.219 (31.0)
17	1.1875-18 UNEF-2A	.234 (5.9)	.085 (2.2)	1.170 (29.7)	.820 (20.8)	.128 (3.3)	.531 (13.5)	1.312 (33.3)
19	1.3125-18 UNEF-2A	.234 (5.9)	.085 (2.2)	1.170 (29.7)	.820 (20.8)	.128 (3.3)	.578 (14.7)	1.438 (36.5)
21	1.4375-10 UNEF-2A	.204 (5.2)	.115 (2.9)	1.200 (30.48)	.820 (20.8)	.128 (3.3)	.625 (15.9)	1.562 (39.7)
23	1.5625-18 UNEF-2A	.204 (5.2)	.115 (2.9)	1.200 (30.48)	.790 (20.1)	.147 (3.7)	.6875 (17.5)	1.688 (42.9)
25	1.6875-18 UNEF-2A	.193 (4.9)	.115 (2.9)	1.200 (30.48)	.790 (20.1)	.147 (3.7)	.750 (19.1)	1.688 (42.9)

© 2010 Glenair, Inc. CAGE CODE 06324 Printed in U.S.A.

240-381J
MIL-DTL-38999 Series I Type Filter Connector
Jam Nut Receptacle

Filter Connector Product Code

MIL-DTL-38999 Series I

Insert Arrangement
IAW MIL-STD-1560

Contact Gender
P - Pin
S - Socket

Filter Type
P - Pi Circuit
C - C Circuit

Capacitance
(See Table II)

Alternate Key Position
Per MIL-DTL-38999
A, B, C, D, N = Normal

240	-	381	J	P	15-35	P	S	P	A	N	N

Shell Style
J - Jam Nut

Connector Class
(See Table I)

Termination
S - Solder Cup
P - PC Tail

Flange Mounting Style
N - Not Applicable

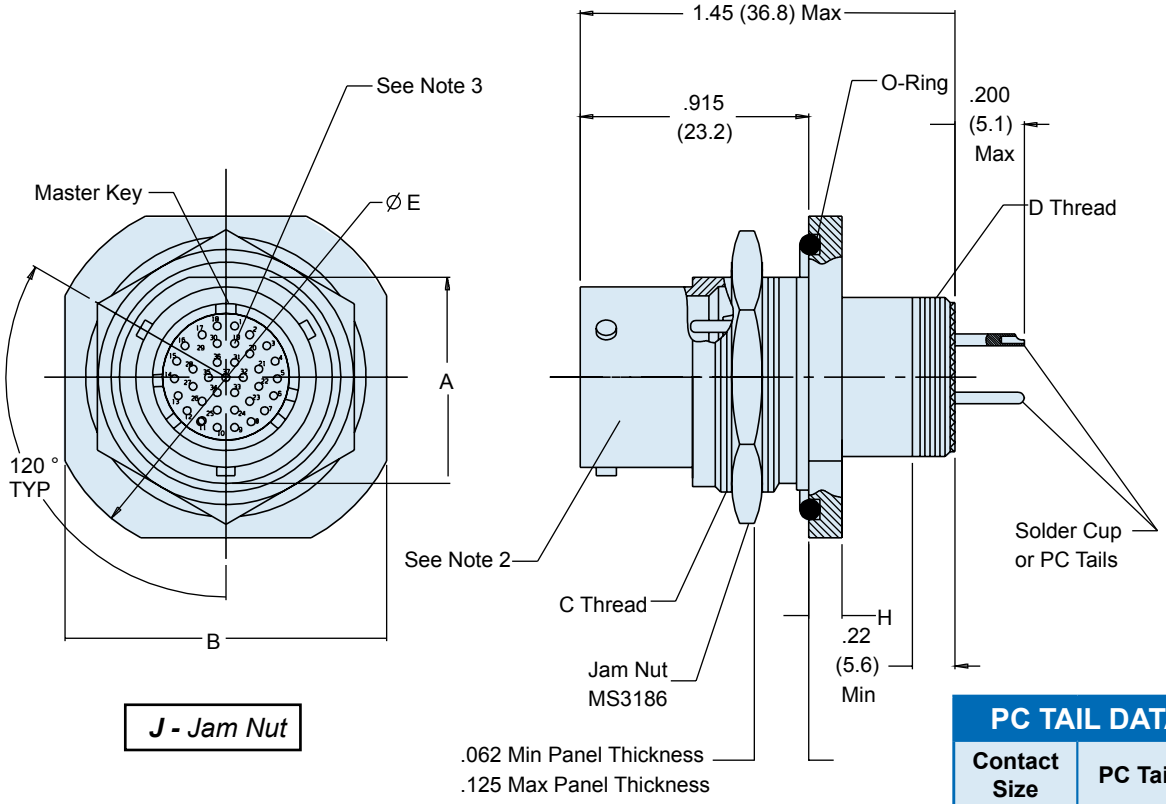

J - Jam Nut

PC TAIL DATA

Contact Size	PC Tail Ø
22D	.020 .018
20	.024 .029
16	.038 .042

© 2010 Glenair, Inc.
CAGE CODE 06324
Printed in U.S.A.

240-381J
MIL-DTL-38999 Series I Type Filter Connector
Jam Nut Receptacle

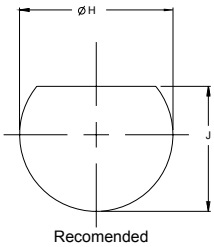

Recomended Panel Cut-Out

TABLE II: CAPACITOR ARRAY CODE CAPACITANCE RANGE

CLASS	PI - CIRCUIT (pF)	C - CIRCUIT (pF)
X*	160,000 - 240,000	80,000 - 120,000
Y*	80,000 - 120,000	40,000 - 60,000
Z*	60,000 - 90,000	30,000 - 45,000
A	38,000 - 56,000	19,000 - 28,000
B	32,000 - 45,000	16,000 - 22,500
C	18,000 - 33,000	9,000 - 16,500
D	8,000 - 12,000	4,000 - 6,000
E	3,300 - 5,000	1,650 - 2,500
F	800 - 1,300	400 - 650
G	400 - 600	200 - 300

* Reduced DWV – Please consult factory.

TABLE I: CONNECTOR CLASS

SYM	CLASS	MATERIAL	FINISH DESCRIPTION
M	Environmental	Aluminum	Electroless Nickel
MT	Environmental	Aluminum	Ni-PTFE *1000 Hour Grey™* Nickel Fluorocarbon Polymer
NF	Environmental	Aluminum	Cadmium O.D. Over Electroless Nickel
P	Environmental	Stainless Steel	Electro-Deposited Nickel
ZN	Environmental	Aluminum	Zinc-Nickel Over Electroless Nickel

MIL-DTL-38999 Series I Jam Nut Panel Cutout

SHELL SIZE CODE	SHELL SIZE	Ø H	J
A	09	.710 (18.0) .700 (17.8)	.670 (17.0) .660 (16.8)
B	11	.835 (21.2) .825 (21.0)	.771 (19.6) .761 (19.3)
C	13	1.020 (25.9) 1.010 (25.7)	.955 (24.3) .945 (24.0)
D	15	1.145 (29.1) 1.135 (28.8)	1.085 (27.6) 1.075 (27.3)
E	17	1.270 (32.3) 1.260 (32.0)	1.210 (30.7) 1.200 (30.5)
F	19	1.395 (35.4) 1.385 (35.2)	1.335 (33.9) 1.325 (33.7)
G	21	1.520 (38.6) 1.510 (38.4)	1.460 (37.1) 1.450 (36.8)
H	23	1.645 (41.8) 1.635 (41.5)	1.585 (40.3) 1.575 (40.0)
J	25	1.770 (45.0) 1.760 (44.7)	1.710 (43.4) 1.700 (43.2)

DIMENSIONS

SHELL SIZE	A	B	C THREAD CLASS 2A UNEF PLATED	D THREAD CLASS 2A UNEF PLATED	E DIA	F	G DIA	H
9	.855 (21.7) .645 (16.4)	1.078 (27.4) 1.046 (26.6)	.6875-24	.4375-28	1.188 (30.2)	.670 (17.0) .661 (16.8)	.709 (18.0) .700 (17.8)	.120 (3.0) .100 (2.5)
11	.755 (19.2) .745 (18.9)	1.266 (32.2) 1.234 (31.3)	.8125-20	.5625-24	1.375 (34.9)	.771 (19.6) .762 (19.4)	.834 (21.2) .825 (21.0)	.120 (3.0) .100 (2.5)
13	.942 (23.9) .932 (23.7)	1.391 (35.3) 1.359 (34.5)	1.0000-20	.8875-24	1.500 (38.1)	.955 (24.3) .946 (24.0)	1.019 (25.9) 1.010 (25.7)	.120 (3.0) .100 (2.5)
15	1.066 (27.1) 1.056 (26.8)	1.516 (38.5) 1.484 (37.7)	1.1250-18	.8125-20	1.625 (41.3)	1.085 (27.6) 1.076 (27.3)	1.144 (29.1) 1.135 (28.8)	.120 (3.0) .100 (2.5)
17	1.191 (30.3) 1.181 (30.0)	1.641 (41.7) 1.609 (40.9)	1.2500-18	.9375-20	1.750 (44.5)	1.210 (30.7) 1.201 (30.5)	1.269 (32.2) 1.260 (32.0)	.120 (3.0) .100 (2.5)
19	1.316 (33.4) 1.306 (33.2)	1.828 (46.4) 1.796 (45.6)	1.3750-18	1.0625-18	1.938 (49.2)	1.335 (33.9) 1.326 (33.7)	1.394 (35.4) 1.385 (35.2)	.151 (3.8) .130 (3.3)
21	1.441 (36.6) 1.431 (36.3)	1.954 (49.6) 1.922 (48.8)	1.5000-18	1.1875-18	2.062 (52.4)	1.460 (37.1) 1.451 (36.9)	1.519 (38.6) 1.510 (38.4)	.151 (3.8) .130 (3.3)
23	1.566 (39.8) 1.556 (39.5)	2.078 (52.8) 2.046 (52.0)	1.6250-18	1.3125-18	2.188 (55.6)	1.585 (40.3) 1.578 (40.1)	1.644 (41.8) 1.635 (41.5)	.151 (3.8) .130 (3.3)
25	1.691 (43.0) 1.681 (42.7)	2.204 (56.0) 2.172 (55.2)	1.7500-18	1.4375-18	2.312 (58.7)	1.710 (43.4) 1.701 (43.2)	1.769 (44.9) 1.760 (44.7)	.151 (3.8) .130 (3.3)

© 2010 Glenair, Inc.

GLENAIR, INC. • 1211 AIR WAY • GLENDALE, CA 91201-2497 • 818-247-6000 • FAX 818-500-9912
www.glenair.com E-Mail: sales@glenair.com

240-381A
MIL-DTL-38999 Series I Filter Connector
Connector Adapter

Filter Connector Product Code — 240

MIL-DTL-38999 Series I — 381

Shell Style — A
A - Connector Adapter

Connector Class — P
(See Table I)

Insert Arrangement — 15-35
IAW MIL-STD-1560

Contact Gender — PS
PS - Pins, Plug Side
SP - Sockets, Plug Side

Filter Type — P
P - Pi Circuit
C - C Circuit

Capacitance — A
(See Table II)

Flange Mounting Style — N
N - Not Applicable

Alternate Key Position — U
Per MIL-DTL-38999
A, B, C, D, N = Normal
U = Universal

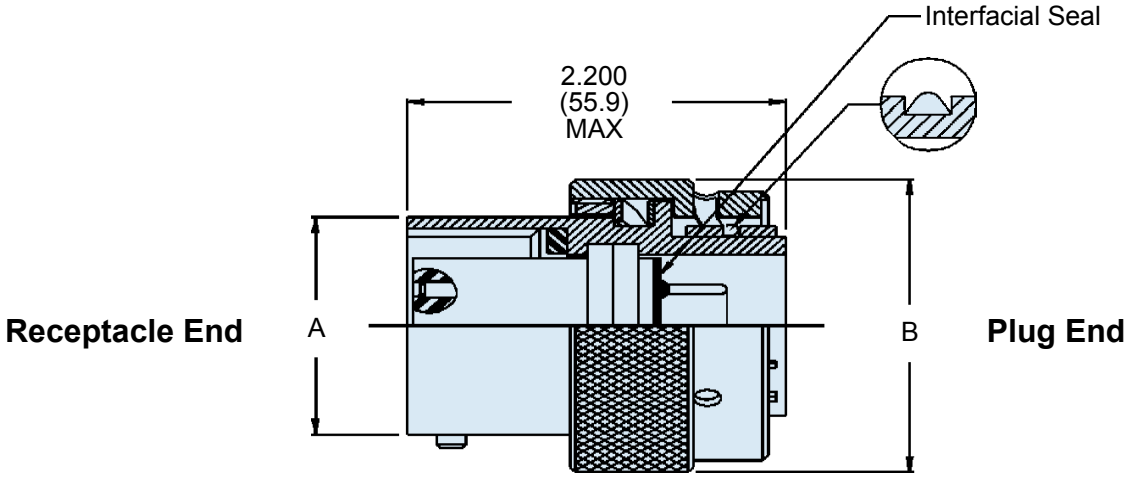

A - Connector Adapter

* Please consult factory for Pin/Pin and/or Socket/Socket contact arrangements.

© 2010 Glenair, Inc.

GLENAIR, INC. • 1211 AIR WAY • GLENDALE, CA 91201-2497 • 818-247-6000 • FAX 818-500-9912
www.glenair.com
E-Mail: sales@glenair.com

240-381A
MIL-DTL-38999 Series I Filter Connector
Connector Adapter

TABLE I: CONNECTOR CLASS			
SYM	CLASS	MATERIAL	FINISH DESCRIPTION
M	Environmental	Aluminum	Electroless Nickel
MT	Environmental	Aluminum	Ni-PTFE *1000 Hour Grey™* Nickel Fluorocarbon Polymer)
NF	Environmental	Aluminum	Cadmium O.D. Over Electroless Nickel
P	Environmental	Stainless Steel	Electro-Deposited Nickel
ZN	Environmental	Aluminum	Zinc-Nickel Over Electroless Nickel

TABLE II: CAPACITOR ARRAY CODE CAPACITANCE RANGE		
CLASS	PI - CIRCUIT (pF)	C - CIRCUIT (pF)
X*	160,000 - 240,000	80,000 - 120,000
Y*	80,000 - 120,000	40,000 - 60,000
Z*	60,000 - 90,000	30,000 - 45,000
A	38,000 - 56,000	19,000 - 28,000
B	32,000 - 45,000	16,000 - 22,500
C	18,000 - 33,000	9,000 - 16,500
D	8,000 - 12,000	4,000 - 6,000
E	3,300 - 5,000	1,650 - 2,500
F	800 - 1,300	400 - 650
G	400 - 600	200 - 300

* Reduced DWV – Please consult factory.

SHELL DIAMETER		
Shell Size	A Max	B Max
09	.573 (14.6)	.910 (23.1)
11	.701 (17.8)	1.035 (26.3)
13	.851 (21.6)	1.210 (30.7)
15	.976 (24.8)	1.330 (33.8)
17	1.101 (28.0)	1.455 (37.0)
19	1.208 (30.7)	1.570 (39.9)
21	1.333 (33.9)	1.695 (43.1)
23	1.458 (37.0)	1.800 (45.7)
25	1.583 (40.2)	1.925 (48.9)

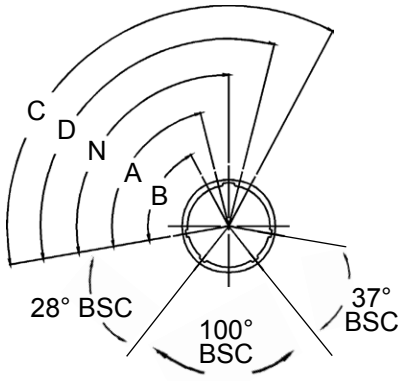

MASTER KEY POSITION				
NORMAL	A°	B°	C°	D°
100°	79°	66°	134°	121°

© 2010 Glenair, Inc. CAGE CODE 06324 Printed in U.S.A.

Glenair MIL-DTL-38999 Series II Type Low-Profile Filter Connector with Bayonet Coupling

Master How to Order • Part Number Breakdown

Filter Connector Product Code

MIL-DTL-38999 Series II

Connector Class (See Table I)

Insert Arrangement
Per MIL-STD-1560

Termination*
S *- Solder Cup*
P *- PC Tail*
*Omit for Connector Adapter.

Capacitance (See Table V)

Alternate Key Position
Per MIL-DTL-38999
A, B, C, D, N = Normal
U = Universal
(Connector Adapters Only)

240	382	J	M	15-35	P	S	P	A	C	N

Shell Style
W *- Wall Mount*
J *- Jam Nut*
A *- Connector Adapter*

Contact Gender
P *- Pin*
S *- Socket*
PS *- Conn. Adapter (Pins, Plug Side)*
SP *- Conn. Adapter (Sockets, Plug Side)*

Filter Type
P *- Pi Circuit*
C *- C Circuit*

Consult Factory for Additional Filter Types, TVS Diodes, and other Custom Filter Connector Configurations.

Flange Mounting Style
N *- Not Applicable/Mfgs. Option*
H *- Chamfered Holes*
C *- Clinch Nuts (4-40 UNC)*
M *- Metric Clinch Nuts (M3)*

TABLE I: CONNECTOR CLASS

SYM	CLASS	MATERIAL	FINISH DESCRIPTION
M	Environmental	Aluminum	Electroless Nickel
MT	Environmental	Aluminum	Ni-PTFE *1000 Hour Grey™* Nickel Fluorocarbon Polymer
NF	Environmental	Aluminum	Cadmium O.D. Over Electroless Nickel
P	Environmental	Stainless Steel	Electro-Deposited Nickel
ZN	Environmental	Aluminum	Zinc-Nickel Over Electroless Nickel
H2	Hermetic	Stainless Steel	Electroless Nickel

TABLE II: CAPACITOR ARRAY CODE CAPACITANCE RANGE

CLASS	PI - CIRCUIT (pF)	C - CIRCUIT (pF)
X*	160,000 - 240,000	80,000 - 120,000
Y*	80,000 - 120,000	40,000 - 60,000
Z*	60,000 - 90,000	30,000 - 45,000
A	38,000 - 56,000	19,000 - 28,000
B	32,000 - 45,000	16,000 - 22,500
C	18,000 - 33,000	9,000 - 16,500
D	8,000 - 12,000	4,000 - 6,000
E	3,300 - 5,000	1,650 - 2,500
F	800 - 1,300	400 - 650
G	400 - 600	200 - 300

* Reduced DWV – Please consult factory.

© 2010 Glenair, Inc. CAGE CODE 06324 Printed in U.S.A.

Glenair MIL-DTL-38999 Series II Type Low-Profile Filter Connector with Bayonet Coupling

Reference Information

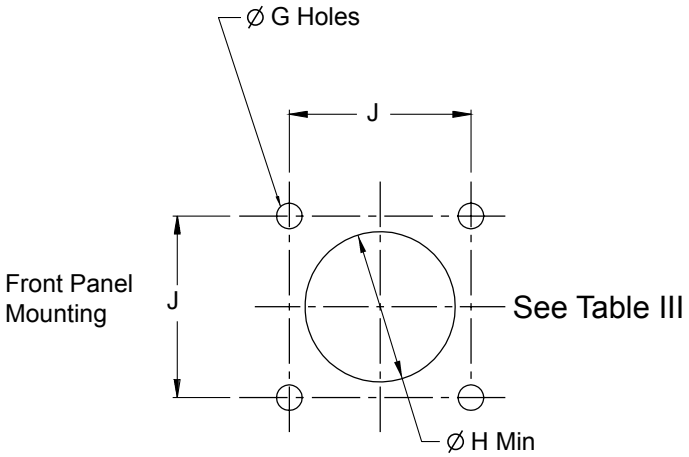

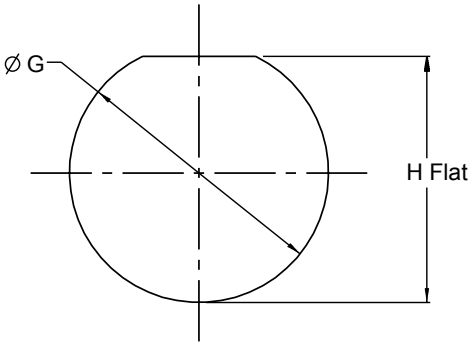

TABLE III: SQUARE FLANGE PANEL CUT-OUTS

Shell Size	Ø G Holes	Ø H Min	Ø J BSC
8	.133 (3.4) .123 (3.1)	.570 (14.5)	.594 (15.1)
10	.133 (3.4) .123 (3.1)	.690 (17.5)	.719 (18.3)
12	.133 (3.4) .123 (3.1)	.820 (20.8)	.812 (20.6)
14	.133 (3.4) .123 (3.1)	.940 (23.9)	.906 (23.0)
16	.133 (3.4) .123 (3.1)	1.070 (27.2)	.969 (24.6)
18	.133 (3.4) .123 (3.1)	1.190 (30.2)	1.062 (27.0)
20	.133 (3.4) .123 (3.1)	1.320 (33.5)	1.156 (29.4)
22	.159 (4.0) .149 (3.8)	1.440 (36.6)	1.250 (31.8)
24	.159 (4.0) .149 (3.8)	1.570 (39.9)	1.375 (34.9)

PANEL IV: JAM-NUT PANEL CUT-OUTS

SHELL SIZE	Ø G	H Flat
08	.894 (22.7) .884 (22.5)	.833 (21.2) .823 (20.9)
10	1.020 (25.9) 1.010 (25.7)	.957 (24.3) .947 (24.1)
12	1.144 (29.1) 1.134 (28.8)	1.081 (27.5) 1.071 (27.2)
14	1.269 (32.2) 1.259 (32.0)	1.206 (30.6) 1.196 (30.4)
16	1.394 (35.4) 1.384 (35.2)	1.336 (33.9) 1.326 (33.7)
18	1.520 (38.6) 1.510 (38.4)	1.456 (37.0) 1.446 (36.7)
20	1.645 (41.8) 1.635 (41.5)	1.581 (40.2) 1.571 (39.9)
22	1.750 (44.5) 1.740 (44.2)	1.706 (43.3) 1.696 (43.1)
24	1.895 (48.1) 1.885 (47.9)	1.831 (46.5) 1.821 (46.3)

APPLICATION NOTES

1. Materials/Finishes: Shells, Barrel, Coupling Nut, Jam Nut - See Table I
   Insulators - high grade rigid dielectric/N.A.
   Seals - Flourosilicone
   PC Tail & Solder Cup contacts: 50µ" Gold over 50µ" Nickel
2. Assembly to be identified with Glenair's name, part number, and date code - space permitting.
3. Insert Arrangement in accordance with MIL-STD-1560. (Arrangement shown for reference only)
4. EMI Circular Filter Receptacle connector designed to meet requirements of MIL-STD-2120 and MIL-DTL-38999, Series II.
5. All contacts to have identical filter value. Other filter arrangements available, contact factory.
6. Electrical Ratings: DWV- 500 VDC; Standard Operating Voltage 200 Volts DC; Current Rating 5 Amps (size 22);
7. Insulation Resistance: 5000 MegOhms Min. at 200 VDC.
8. Operating Temperature -55°C to +125°C (Env Class Connectors)
9. Other filter styles (C-L, L-C, Unbalanced PI, Multi-Stage, Multi-Value) are available, please consult the factory.
10. Metric Dimensions (mm) are indicated in parentheses.

© 2010 Glenair, Inc. CAGE CODE 06324 Printed in U.S.A.

240-382W
MIL-DTL-38999 Series II Filter Connector
Wall Mount Receptacle

240 - 382 W M 15-35 P S P A C N

- **Filter Connector Product Code** (240)
- **MIL-DTL-38999 Series II** (382)
- **Shell Style** — *W - Wall Mount* (W)
- **Connector Class** — *(See Table I)* (M)
- **Insert Arrangement** — *IAW MIL-STD-1560* (15-35)
- **Contact Gender** — *P - Pin*, *S - Socket* (P)
- **Termination** — *S - Solder Cup*, *P - PC Tail* (S)
- **Filter Type** — *P - Pi Circuit*, *C - C Circuit* (P)
- **Capacitance** — *(See Table II)* (A)
- **Flange Mounting Style** — *H - Chamfered Holes*, *C - Clinch Nuts (4-40 UNC)*, *M - Metric Clinch Nuts (M3)* (C)
- **Alternate Key Position** — Per MIL-DTL-38999 *A, B, C, D, N = Normal* (N)

***W** - Wall Mount*

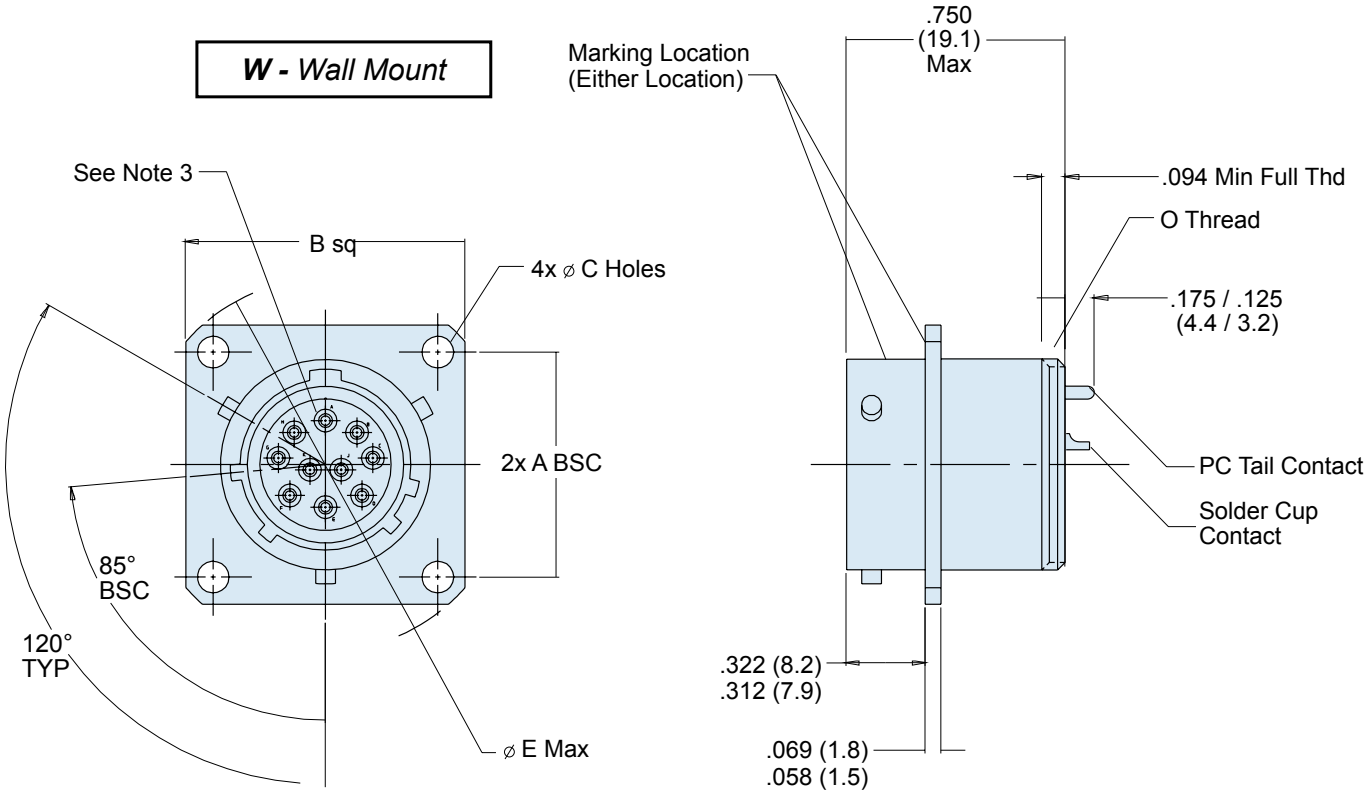

© 2010 Glenair, Inc. CAGE CODE 06324 Printed in U.S.A.

240-382W
MIL-DTL-38999 Series II Filter Connector
Wall Mount Receptacle

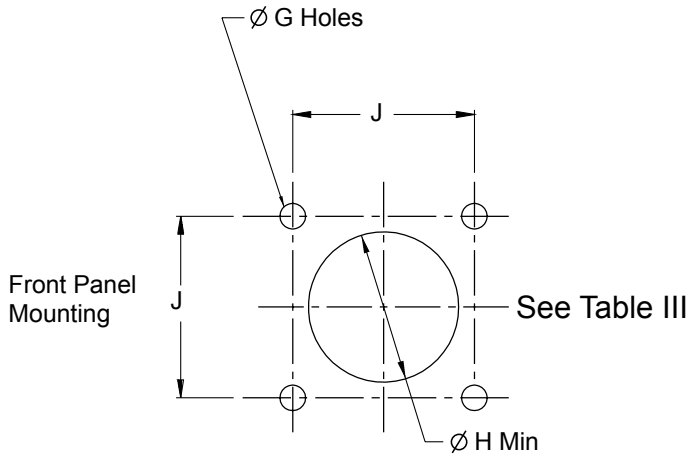

TABLE I: CONNECTOR CLASS

SYM	CLASS	MATERIAL	FINISH DESCRIPTION
M	Environmental	Aluminum	Electroless Nickel
MT	Environmental	Aluminum	Ni-PTFE *1000 Hour Grey™* Nickel Fluorocarbon Polymer
NF	Environmental	Aluminum	Cadmium O.D. Over Electroless Nickel
P	Environmental	Stainless Steel	Electro-Deposited Nickel
ZN	Environmental	Aluminum	Zinc-Nickel Over Electroless Nickel

TABLE II: CAPACITOR ARRAY CODE CAPACITANCE RANGE

CLASS	PI - CIRCUIT (pF)	C - CIRCUIT (pF)
X*	160,000 - 240,000	80,000 - 120,000
Y*	80,000 - 120,000	40,000 - 60,000
Z*	60,000 - 90,000	30,000 - 45,000
A	38,000 - 56,000	19,000 - 28,000
B	32,000 - 45,000	16,000 - 22,500
C	18,000 - 33,000	9,000 - 16,500
D	8,000 - 12,000	4,000 - 6,000
E	3,300 - 5,000	1,650 - 2,500
F	800 - 1,300	400 - 650
G	400 - 600	200 - 300

* Reduced DWV – Please consult factory.

Consult Factory for Additional Filter Types, TVS Diodes, and other Custom Filter Connector Configurations.

TABLE III: SQUARE FLANGE PANEL CUT-OUTS

Shell Size	Ø G Holes	Ø H Min	Ø J BSC
8	.133 (3.4) .123 (3.1)	.570 (14.5)	.594 (15.1)
10	.133 (3.4) .123 (3.1)	.690 (17.5)	.719 (18.3)
12	.133 (3.4) .123 (3.1)	.820 (20.8)	.812 (20.6)
14	.133 (3.4) .123 (3.1)	.940 (23.9)	.906 (23.0)
16	.133 (3.4) .123 (3.1)	1.070 (27.2)	.969 (24.6)
18	.133 (3.4) .123 (3.1)	1.190 (30.2)	1.062 (27.0)
20	.133 (3.4) .123 (3.1)	1.320 (33.5)	1.156 (29.4)
22	.159 (4.0) .149 (3.8)	1.440 (36.6)	1.250 (31.8)
24	.159 (4.0) .149 (3.8)	1.570 (39.9)	1.375 (34.9)

TABLE IV: CONNECTOR DIMENSIONS

Shell Size	A BSC	B SQ Max	Ø C Holes	D Threads	Ø E Max
8	0.594 (15.1)	0.828 (21.0)	.130 (3.3) .115 (2.9)	.5625-24 UNEF-2A	1.078 (27.4)
10	0.719 (18.3)	0.954 (24.2)	.130 (3.3) .115 (2.9)	.6875-24 UNEF-2A	1.256 (31.9)
12	0.812 (20.6)	1.047 (26.6)	.130 (3.3) .115 (2.9)	.8125-20 UNEF-2A	1.391 (35.3)
14	0.906 (23.0)	1.141 (29.0)	.130 (3.3) .115 (2.9)	.9375-20 UNEF-2A	1.516 (38.5)
16	0.969 (24.6)	1.234 (31.3)	.130 (3.3) .115 (2.9)	1.0625-18 UNEF-2A	1.641 (41.7)
18	1.062 (27.0)	1.328 (33.7)	.130 (3.3) .115 (2.9)	1.1875-18 UNEF-2A	1.766 (44.9)
20	1.156 (29.4)	1.453 (36.9)	.130 (3.3) .115 (2.9)	1.3125-18 UNEF-2A	1.891 (48.0)
22	1.25 (31.8)	1.578 (40.1)	.130 (3.3) .115 (2.9)	1.4375-10 UNEF-2A	2.016 (51.2)
24	1.375 (34.9)	1.703 (43.3)	.157 (4.0) .142 (3.6)	1.5625-18 UNEF-2A	2.204 (56.0)

© 2010 Glenair, Inc.
CAGE CODE 06324
Printed in U.S.A.

240-382J (Hermetic Version Shown)
MIL-DTL-38999 Series II Filter Connector
Jam Nut Receptacle

Filter Connector Product Code

MIL-DTL-38999 Series II

Insert Arrangement
IAW MIL-STD-1560

Contact Gender
P *- Pin*
S *- Socket*

Termination
S *- Solder Cup*
P *- PC Tail*

Capacitance
(See Table II)

Alternate Key Position
Per MIL-DTL-38999
A, B, C, D, N = Normal

240	-	382	J	H2	15-35	P	S	P	A	N	N

Shell Style
J *- Jam Nut*

Connector Class
(See Table I)

Filter Type
P *- Pi Circuit*
C *- C Circuit*

Flange Mounting Style
N *- Not Applicable*

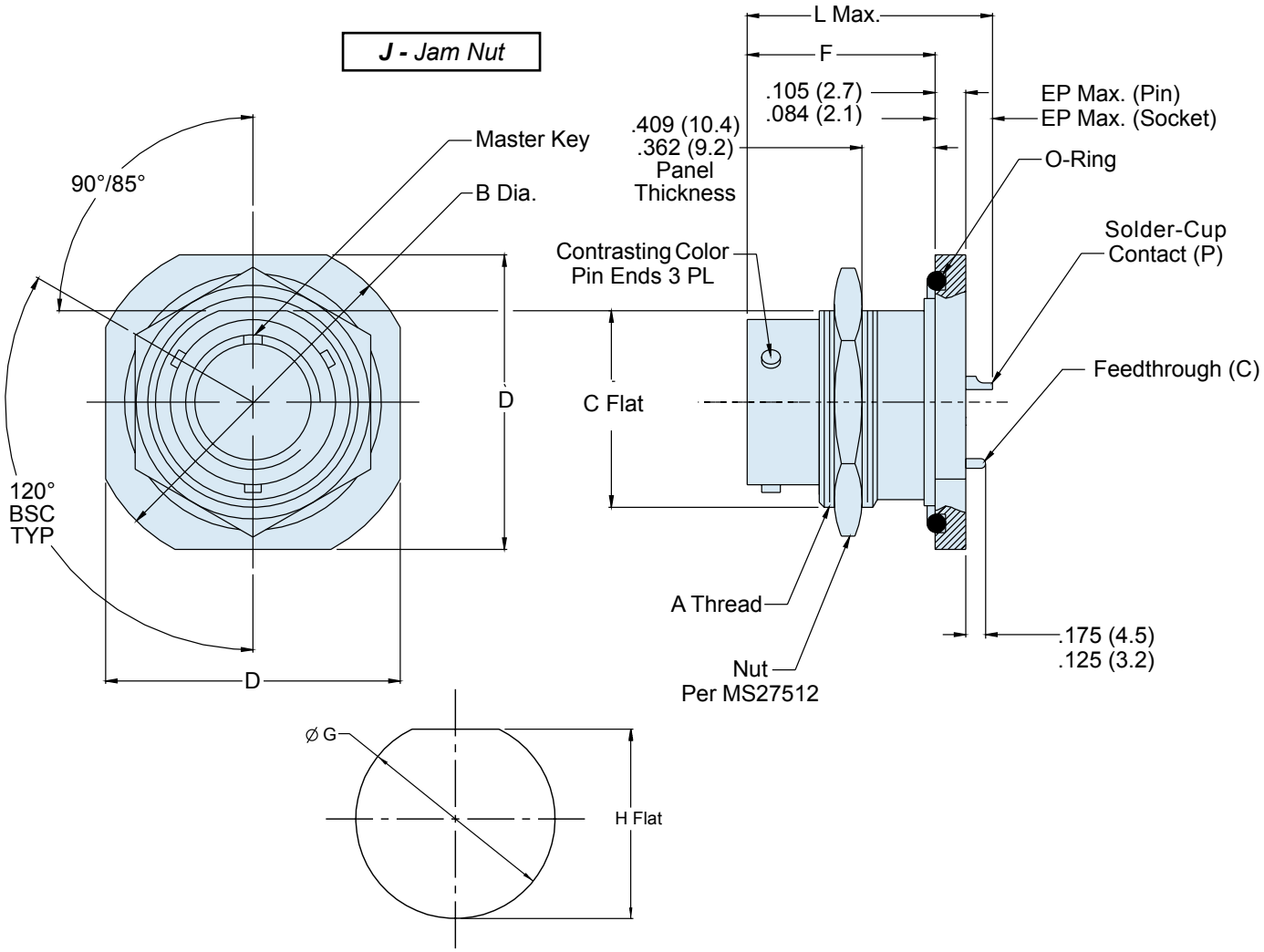

© 2010 Glenair, Inc. CAGE CODE 06324 Printed in U.S.A.

240-382J (Hermetic Version Shown)
MIL-DTL-38999 Series II Filter Connector
Jam Nut Receptacle

Glenair®

TABLE I: CONNECTOR CLASS

SYM	CLASS	MATERIAL	FINISH DESCRIPTION
M	Environmental	Aluminum	Electroless Nickel
MT	Environmental	Aluminum	Ni-PTFE *1000 Hour Grey™* Nickel Fluorocarbon Polymer
NF	Environmental	Aluminum	Cadmium O.D. Over Electroless Nickel
P	Environmental	Stainless Steel	Electro-Deposited Nickel
ZN	Environmental	Aluminum	Zinc-Nickel Over Electroless Nickel
H2	Hermetic	Stainless Steel	Electroless Nickel

TABLE II: CAPACITOR ARRAY CODE CAPACITANCE RANGE

CLASS	PI - CIRCUIT (pF)	C - CIRCUIT (pF)
X*	160,000 - 240,000	80,000 - 120,000
Y*	80,000 - 120,000	40,000 - 60,000
Z*	60,000 - 90,000	30,000 - 45,000
A	38,000 - 56,000	19,000 - 28,000
B	32,000 - 45,000	16,000 - 22,500
C	18,000 - 33,000	9,000 - 16,500
D	8,000 - 12,000	4,000 - 6,000
E	3,300 - 5,000	1,650 - 2,500
F	800 - 1,300	400 - 650
G	400 - 600	200 - 300

* Reduced DWV – Please consult factory.

Consult Factory for Additional Filter Types, TVS Diodes, and other Custom Filter Connector Configurations.

PANEL IV: JAM-NUT PANEL CUT-OUTS

SHELL SIZE	∅ G	H Flat
08	.894 (22.7) .884 (22.5)	.833 (21.2) .823 (20.9)
10	1.020 (25.9) 1.010 (25.7)	.957 (24.3) .947 (24.1)
12	1.144 (29.1) 1.134 (28.8)	1.081 (27.5) 1.071 (27.2)
14	1.269 (32.2) 1.259 (32.0)	1.206 (30.6) 1.196 (30.4)
16	1.394 (35.4) 1.384 (35.2)	1.336 (33.9) 1.326 (33.7)
18	1.520 (38.6) 1.510 (38.4)	1.456 (37.0) 1.446 (36.7)
20	1.645 (41.8) 1.635 (41.5)	1.581 (40.2) 1.571 (39.9)
22	1.750 (44.5) 1.740 (44.2)	1.706 (43.3) 1.696 (43.1)
24	1.895 (48.1) 1.885 (47.9)	1.831 (46.5) 1.821 (46.3)

TABLE III

SHELL SIZE	A THREAD .1P- .03L-TS	B DIA.	C FLAT	D A/F	EP MAX.	ES MAX.	F	G DIA.	H	L MAX.
08	.875-20 UNEF	1.391 (35.3) 1.359 (34.5)	.818 (20.8) .811 (20.6)	1.266 (32.2) 1.234 (31.3)	.281 (7.1)	.359 (9.1)	.743 (18.9) .733 (18.6)	.894 (22.7) .884 (22.5)	.833 (21.2) .823 (20.9)	1.024 (26.0)
10	.1.000-20 UNEF	1.516 (38.5) 1.484 (37.7)	.942 (23.9) .935 (23.7)	1.391 (35.3) 1.359 (34.5)	.281 (7.1)	.359 (9.1)	.743 (18.9) .733 (18.6)	1.020 (25.9) 1.010 (25.7)	.957 (24.3) .947 (24.1)	1.024 (26.0)
12	1.125-18 UNEF	1.641 (41.7) 1.609 (40.9)	1.066 (27.1) 1.059 (26.9)	1.516 (38.5) 1.484 (37.7)	.281 (7.1)	.359 (9.1)	.743 (18.9) .733 (18.6)	1.144 (29.1) 1.134 (28.8)	1.081 (27.5) 1.071 (27.2)	1.024 (26.0)
14	1.250-18 UNEF	1.766 (44.9) 1.734 (44.0)	1.191 (30.3) 1.184 (30.1)	1.641 (41.7) 1.609 (40.9)	.281 (7.1)	.359 (9.1)	.743 (18.9) .733 (18.6)	1.269 (32.2) 1.259 (32.0)	1.206 (30.6) 1.196 (30.4)	1.024 (26.0)
16	1.375-18 UNEF	1.954 (49.6) 1.922 (48.8)	1.321 (33.6) 1.314 (33.4)	1.797 (45.6) 1.765 (44.8)	.281 (7.1)	.359 (9.1)	.743 (18.9) .733 (18.6)	1.394 (35.4) 1.384 (35.2)	1.336 (33.9) 1.326 (33.7)	1.024 (26.0)
18	1.500-18 UNEF	2.032 (51.6) 2.000 (50.8)	1.441 (36.6) 1.434 (36.4)	1.906 (48.4) 1.874 (47.6)	.281 (7.1)	.359 (9.1)	.743 (18.9) .733 (18.6)	1.520 (38.6) 1.510 (38.4)	1.456 (37.0) 1.446 (36.7)	1.024 (26.0)
20	1.625-18 UNEF	2.157 (54.8) 2.125 (54.0)	1.566 (39.8) 1.559 (39.6)	2.032 (51.6) 2.000 (50.8)	.250 (6.4)	.344 (8.7)	.769 (19.5) .759 (19.3)	1.645 (41.8) 1.635 (41.5)	1.581 (40.2) 1.571 (39.9)	1.019 (25.9)
22	1.750-18 UNS	2.281 (57.9) 2.249 (57.1)	1.691 (43.0) 1.684 (42.8)	2.156 (54.8) 2.124 (53.9)	.250 (6.4)	.344 (8.7)	.769 (19.5) .759 (19.3)	1.750 (44.5) 1.740 (44.2)	1.706 (43.3) 1.696 (43.1)	1.019 (25.9)
24	1.875-16 UN	2.406 (61.1) 2.374 (60.3)	1.816 (46.1) 1.809 (45.9)	2.281 (57.9) 2.249 (57.1)	.250 (6.4)	.344 (8.7)	.769 (19.5) .759 (19.3)	1.895 (48.1) 1.885 (47.9)	1.831 (46.5) 1.821 (46.3)	1.019 (25.9)

*Some dimensions do not apply. Consult factory

© 2010 Glenair, Inc.
CAGE CODE 06324
Printed in U.S.A.

GLENAIR, INC. • 1211 AIR WAY • GLENDALE, CA 91201-2497 • 818-247-6000 • FAX 818-500-9912
www.glenair.com
E-Mail: sales@glenair.com

240-382A
MIL-DTL-38999 Series II Filter Connector
Connector Adapter

Filter Connector Product Code

MIL-DTL-38999 Series II

Insert Arrangement
IAW MIL-STD-1560

Contact Gender
PS - Pins, Plug Side
SP - Sockets, Plug Side

Capacitance
(See Table II)

Alternate Key Position
Per MIL-DTL-38999
A, B, C, D, N = Normal
U = Universal

240	-	382	A	M	15-35	PS	P	A	N	U

Shell Style
A - Connector Adapter

Connector Class
(See Table I)

Filter Type
P - Pi Circuit
C - C Circuit

Flange Mounting Style
N - Not Applicable

***A** - Connector Adapter*

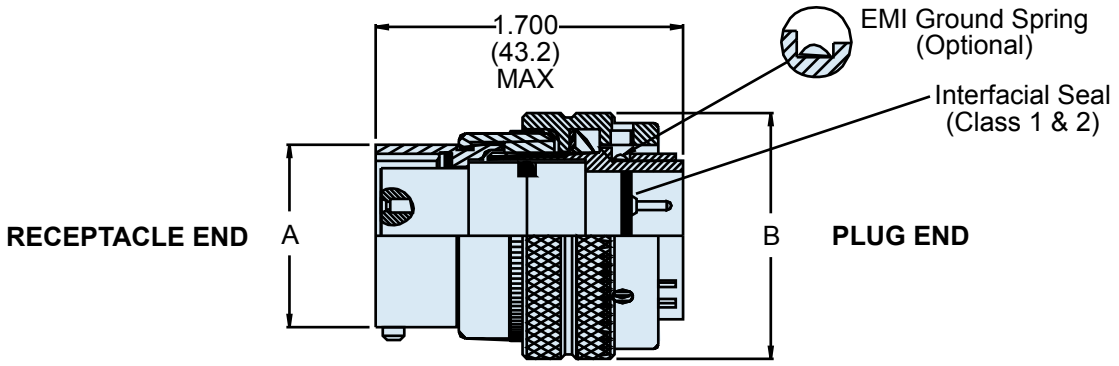

* Please consult factory for Pin/Pin and/or Socket/Socket contact arrangements.

© 2010 Glenair, Inc.

GLENAIR, INC. • 1211 AIR WAY • GLENDALE, CA 91201-2497 • 818-247-6000 • FAX 818-500-9912
www.glenair.com
E-Mail: sales@glenair.com

240-382A
MIL-DTL-38999 Series II Filter Connector
Connector Adapter

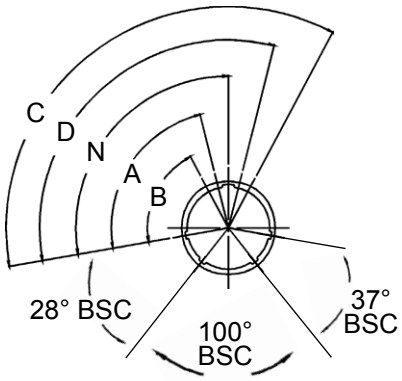

TABLE I: CONNECTOR CLASS

SYM	CLASS	MATERIAL	FINISH DESCRIPTION
M	Environmental	Aluminum	Electroless Nickel
MT	Environmental	Aluminum	Ni-PTFE *1000 Hour Grey*™ Nickel Fluorocarbon Polymer
NF	Environmental	Aluminum	Cadmium O.D. Over Electroless Nickel
P	Environmental	Stainless Steel	Electro-Deposited Nickel
ZN	Environmental	Aluminum	Zinc-Nickel Over Electroless Nickel

SHELL DIAMETER

Shell Size	A Max	B Max
08	.474 (12.0)	.750 (19.1)
10	.591 (15.0)	.859 (21.8)
12	.751 (19.1)	1.031 (26.2)
14	.875 (22.2)	1.156 (29.4)
16	1.001 (25.4)	1.281 (32.5)
18	1.126 (28.6)	1.391 (35.3)
20	1.251 (31.8)	1.531 (38.9)
22	1.376 (35.0)	1.656 (42.1)
24	1.501 (38.1)	1.777 (45.1)

TABLE II: CAPACITOR ARRAY CODE CAPACITANCE RANGE

CLASS	PI - CIRCUIT (pF)	C - CIRCUIT (pF)
X*	160,000 - 240,000	80,000 - 120,000
Y*	80,000 - 120,000	40,000 - 60,000
Z*	60,000 - 90,000	30,000 - 45,000
A	38,000 - 56,000	19,000 - 28,000
B	32,000 - 45,000	16,000 - 22,500
C	18,000 - 33,000	9,000 - 16,500
D	8,000 - 12,000	4,000 - 6,000
E	3,300 - 5,000	1,650 - 2,500
F	800 - 1,300	400 - 650
G	400 - 600	200 - 300

* Reduced DWV – Please consult factory.

Consult Factory for Additional Filter Types, TVS Diodes, and other Custom Filter Connector Configurations.

MASTER KEY POSITION

NORMAL	A°	B°	C°	D°
100°	79°	66°	134°	121°

© 2010 Glenair, Inc.

GLENAIR, INC. • 1211 AIR WAY • GLENDALE, CA 91201-2497 • 818-247-6000 • FAX 818-500-9912
www.glenair.com E-Mail: sales@glenair.com

Glenair MIL-DTL-38999 Series III Type Filter Connector with Threaded Coupling

Master How to Order • Part Number Breakdown

Filter Connector Product Code

MIL-DTL-38999 Series III

Connector Class (See Table I)

Insert Arrangement
Per MIL-STD-1560

Termination*
S *- Solder Cup*
P *- PC Tail*
C *- Crimp***
*Omit for Connector Adapter.
**Crimp Option applies to shell style R and S only.

Capacitance (See Table II)

Alternate Key Position
Per MIL-DTL-38999
A, B, C, D, E, N = Normal
U = Universal
(Connector Adapters Only)

240	383	J	P	15-35	P	S	P	A	C	N

Shell Style
P *- Plug*
W *- Wall Mount*
J *- Jam Nut*
S *- Crimp Removable Jam Nut*
D *- Dual Flange* Wall Mount*
E *- Dual Flange* Jam Nut*
R *- Crimp Removable Wall Mount*
A *- Connector Adapter*

* Dual Flange Available Only with PC Tail Terminations

Contact Gender
P *- Pin*
S *- Socket*
PS *- Conn. Adapter (Pins, Plug Side)*
SP *- Conn. Adapter (Sockets, Plug Side)*

Flange Mounting Style
N *- Not Applicable/Mfgs. Option*
S *- Slotted Holes, Chamfered*
H *- Round Holes, Chamfered*
C *- Clinch Nuts (4-40 UNC)**
M *- Metric Clinch Nuts (M3)**
*Not Available for Hermetics and Composites

Filter Type
P *- Pi Circuit*
C *- C Circuit*

Consult Factory for Additional Filter Types, TVS Diodes, and other Custom Configurations.

TABLE II: CAPACITOR ARRAY CODE CAPACITANCE RANGE

CLASS	PI - CIRCUIT (pF)	C - CIRCUIT (pF)
X*	160,000 - 240,000	80,000 - 120,000
Y*	80,000 - 120,000	40,000 - 60,000
Z*	60,000 - 90,000	30,000 - 45,000
A	38,000 - 56,000	19,000 - 28,000
B	32,000 - 45,000	16,000 - 22,500
C	18,000 - 33,000	9,000 - 16,500
D	8,000 - 12,000	4,000 - 6,000
E	3,300 - 5,000	1,650 - 2,500
F	800 - 1,300	400 - 650
G	400 - 600	200 - 300

* Reduced DWV – Please consult factory.

TABLE I: CONNECTOR CLASS

SYM	CLASS	MATERIAL	FINISH DESCRIPTION
M	Environmental	Aluminum	Electroless Nickel
MT	Environmental	Aluminum	Nickel Fluorocarbon Polymer (Ni-PTFE)
NF	Environmental	Aluminum	Cad. O.D. Over Electroless Nickel
P	Environmental	Stainless	Electro-Deposited Nickel
XM	Environmental	Composite	Electroless Nickel
XMT	Environmental	Composite	Nickel Fluorocarbon Polymer (Ni-PTFE)
XW	Environmental	Composite	Cad. O.D. Over Electroless Nickel
ZN	Environmental	Aluminum	Zinc-Nickel Over Electroless Nickel
H2*	Hermetic	Stainless	Electroless Nickel

* Some dimensions do not apply, see sales drawing 240-383JH2

© 2010 Glenair, Inc.

GLENAIR, INC. • 1211 AIR WAY • GLENDALE, CA 91201-2497 • 818-247-6000 • FAX 818-500-9912
www.glenair.com E-Mail: sales@glenair.com

Glenair MIL-DTL-38999 Series III Type Filter Connector with Threaded Coupling

Reference Information

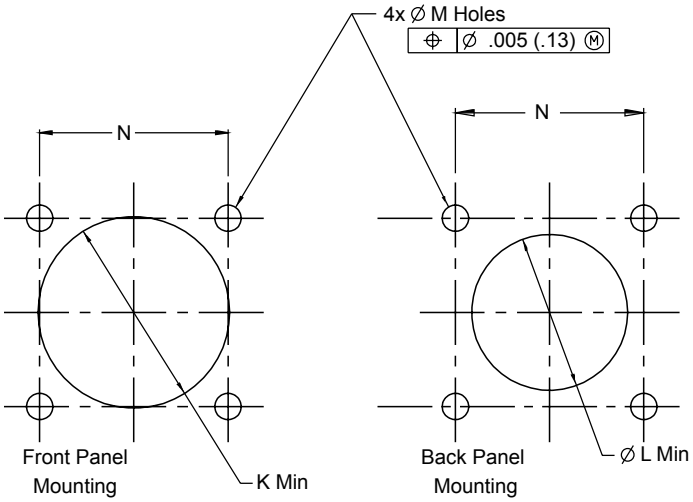

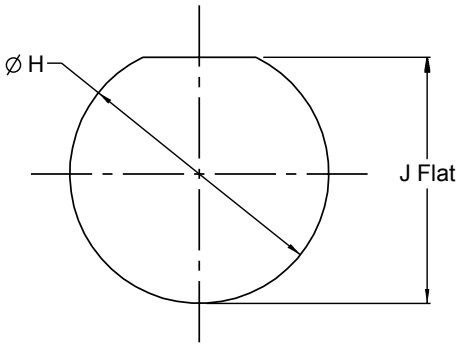

MIL-DTL-38999 Series III Square Flange Panel Cutouts

Shell Size Code	Shell Size	⌀ K Min	⌀ L Min	M Holes	N BSC
A	09	.656 (16.7)	.516 (13.1)	.133 (3.4) .123 (3.1)	.719 (18.3)
B	11	.796 (20.2)	.625 (15.9)	.133 (3.4) .123 (3.1)	.812 (20.6)
C	13	.922 (23.4)	.750 (19.1)	.133 (3.4) .123 (3.1)	.906 (23.0)
D	15	1.047 (26.6)	.906 (23.0)	.133 (3.4) .123 (3.1)	.969 (24.6)
E	17	1.219 (31.0)	1.016 (25.8)	.133 (3.4) .123 (3.1)	1.062 (27.0)
F	19	1.297 (32.9)	1.141 (29.0)	.133 (3.4) .123 (3.1)	1.156 (29.4)
G	21	1.422 (36.1)	1.266 (32.2)	.133 (3.4) .123 (3.1)	1.250 (31.8)
H	23	1.547 (39.3)	1.375 (34.9)	.159 (4.0) .149 (3.8)	1.375 (34.9)
J	25	1.672 (42.5)	1.484 (37.7)	.155 (3.9) .145 (3.7)	1.500 (38.1)

MIL-DTL-38999 Series III Jam Nut Panel Cutout

SHELL SIZE CODE	SHELL SIZE	Ø H	J
A	09	.710 (18.0) .700 (17.8)	.670 (17.0) .660 (16.8)
B	11	.835 (21.2) .825 (21.0)	.771 (19.6) .761 (19.3)
C	13	1.020 (25.9) 1.010 (25.7)	.955 (24.3) .945 (24.0)
D	15	1.145 (29.1) 1.135 (28.8)	1.085 (27.6) 1.075 (27.3)
E	17	1.270 (32.3) 1.260 (32.0)	1.210 (30.7) 1.200 (30.5)
F	19	1.395 (35.4) 1.385 (35.2)	1.335 (33.9) 1.325 (33.7)
G	21	1.520 (38.6) 1.510 (38.4)	1.460 (37.1) 1.450 (36.8)
H	23	1.645 (41.8) 1.635 (41.5)	1.585 (40.3) 1.575 (40.0)
J	25	1.770 (45.0) 1.760 (44.7)	1.710 (43.4) 1.700 (43.2)

APPLICATION NOTES

1. Materials/Finishes: Shells, Barrel, Coupling Nut, Jam Nut - See Table I
   Insulators - high grade rigid dielectric/N.A.
   Seals - Flourosilicone
   PC Tail & Solder Cup contacts: 50µ" Gold over 50µ" Nickel
2. Assembly to be identified with Glenair's name, part number, and date code - space permitting.
3. Insert Arrangement in accordance with MIL-STD-1560. (Arrangement shown for reference only)
4. EMI Circular Filter Receptacle connector designed to meet requirements of MIL-STD-2120 and MIL-DTL-38999, Series III.
5. All contacts to have identical filter value. Other filter arrangements available, contact factory.
6. Electrical Ratings: DWV- 500 VDC; Standard Operating Voltage 200 Volts DC; Current Rating 5 Amps (size 22);
7. Insulation Resistance: 5000 MegOhms Min. at 200 VDC.
8. Operating Temperature -55°C to +125°C (Env Class Connectors)
9. Other filter styles (C-L, L-C, Unbalanced PI, Multi-Stage, Multi-Value) are available, please consult the factory.
10. Metric Dimensions (mm) are indicated in parentheses.

© 2010 Glenair, Inc. CAGE CODE 06324 Printed in U.S.A.

240-383P
MIL-DTL-38999 Series III Filter Connector
Plug Receptacle

Filter Connector Product Code

MIL-DTL-38999 Series III

Contact Gender
P - Pin
S - Socket

Alternate Key Position
Per MIL-DTL-38999
A, B, C, D, E, N = Normal

Insert Arrangement
IAW MIL-STD-1560

Filter Type
P - Pi Circuit
C - C Circuit

Capacitance
(See Table II)

240	-	383	P	P	15-35	P	S	P	A	N	N

Shell Style
P - Plug

Connector Class
(See Table I)

Termination
S - Solder Cup

Flange Mounting Style
N - Not Applicable

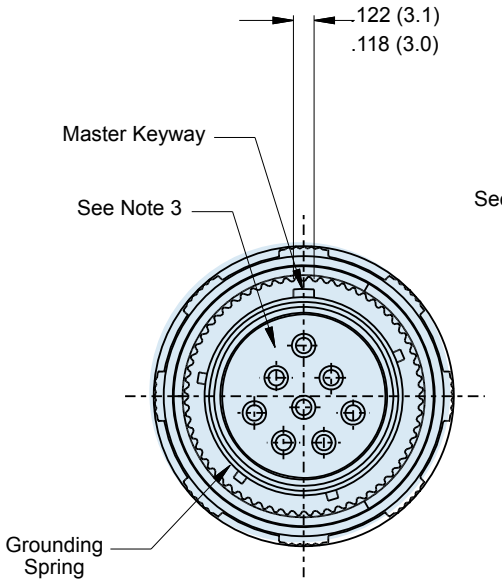

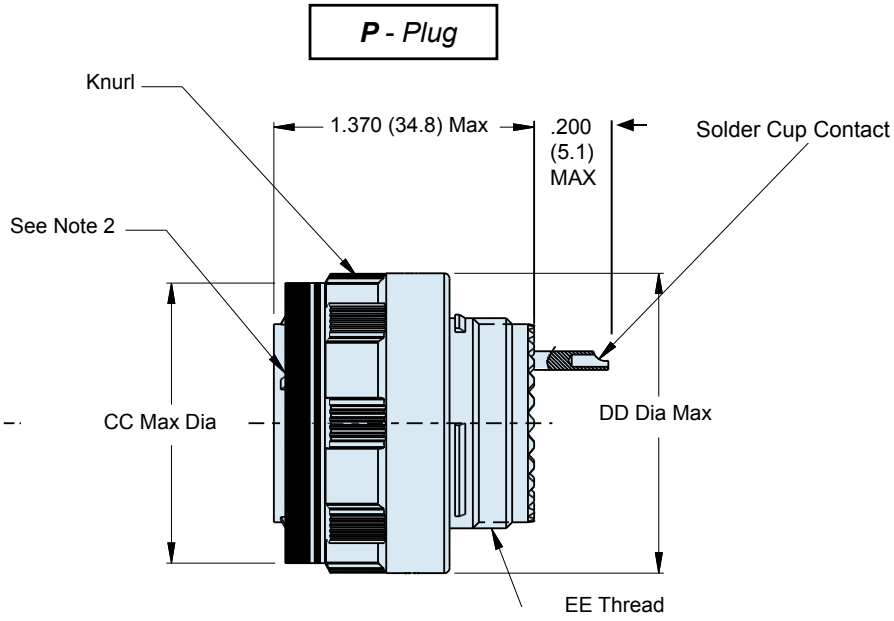

© 2010 Glenair, Inc.

GLENAIR, INC. • 1211 AIR WAY • GLENDALE, CA 91201-2497 • 818-247-6000 • FAX 818-500-9912
www.glenair.com
E-Mail: sales@glenair.com

240-383P
MIL-DTL-38999 Series III Filter Connector
Plug Receptacle

Glenair®

TABLE I: CONNECTOR CLASS

SYM	CLASS	MATERIAL	FINISH DESCRIPTION
M	Environmental	Aluminum	Electroless Nickel
MT	Environmental	Aluminum	Nickel Fluorocarbon Polymer (Ni-PTFE)
NF	Environmental	Aluminum	Cad. O.D. Over Electroless Nickel
P	Environmental	Stainless	Electro-Deposited Nickel
XM	Environmental	Composite	Electroless Nickel
XMT	Environmental	Composite	Nickel Fluorocarbon Polymer (Ni-PTFE)
XW	Environmental	Composite	Cad. O.D. Over Electroless Nickel
ZN	Environmental	Aluminum	Zinc-Nickel Over Electroless Nickel
H2*	Hermetic	Stainless	Electroless Nickel

* Some dimensions do not apply, see sales drawing 240-383JH2

TABLE II: CAPACITOR ARRAY CODE CAPACITANCE RANGE

CLASS	PI - CIRCUIT (pF)	C - CIRCUIT (pF)
X*	160,000 - 240,000	80,000 - 120,000
Y*	80,000 - 120,000	40,000 - 60,000
Z*	60,000 - 90,000	30,000 - 45,000
A	38,000 - 56,000	19,000 - 28,000
B	32,000 - 45,000	16,000 - 22,500
C	18,000 - 33,000	9,000 - 16,500
D	8,000 - 12,000	4,000 - 6,000
E	3,300 - 5,000	1,650 - 2,500
F	800 - 1,300	400 - 650
G	400 - 600	200 - 300

* Reduced DWV – Please consult factory.

DIMENSIONS

SHELL SIZE CODE	SHELL SIZE	CC Dia Max	DD Dia Max	EE THREAD
B	11	.929 (23.6)	.984 (25.0)	M15 X 1.0-6g 0.100R
C	13	1.110 (28.2	1.157 (29.4	M18 X 1.0-6g 0.100R
D	15	1.232 (31.3)	1.280 (32.5)	M22 X 1.0-6g 0.100R
E	17	1.358 (34.5)	1.406 (35.7)	M25 X 1.0-6g 0.100R
F	19	1.469 (37.3)	1.516 (38.5)	M28 X 1.0-6g 0.100R
G	21	1.594 (40.5)	1.642 (41.7	M31 X 1.0-6g 0.100R
H	23	1.720 (43.7)	1.768 (44.9)	M34 X 1.0-6g 0.100R
J	25	1.843 (46.8)	1.890 (48.0)	M37 X 1.0-6g 0.100R

Consult Factory for Additional Filter Types, TVS Diodes, and other Custom Configurations.

© 2010 Glenair, Inc.

GLENAIR, INC. • 1211 AIR WAY • GLENDALE, CA 91201-2497 • 818-247-6000 • FAX 818-500-9912
www.glenair.com E-Mail: sales@glenair.com

240-383W
MIL-DTL-38999 Series III Filter Connector
Wall Mount Receptacle

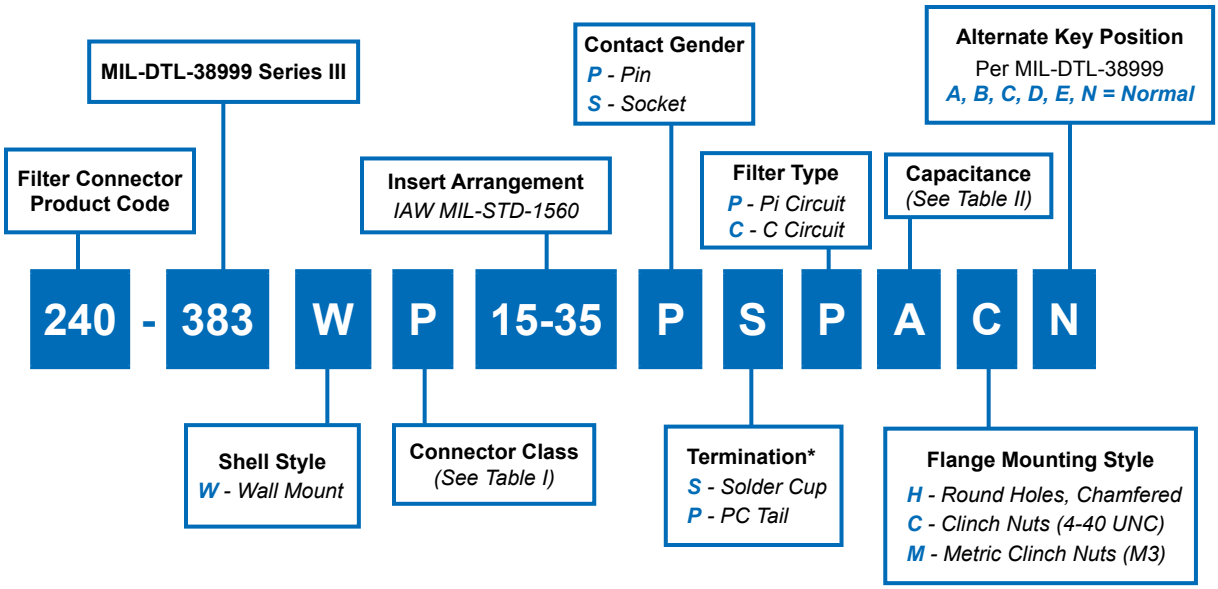

Clinch Nuts and Metric Clinch Nuts Not Available for Composites.
Helicoils and Threaded Inserts/Specials Available Upon Request.

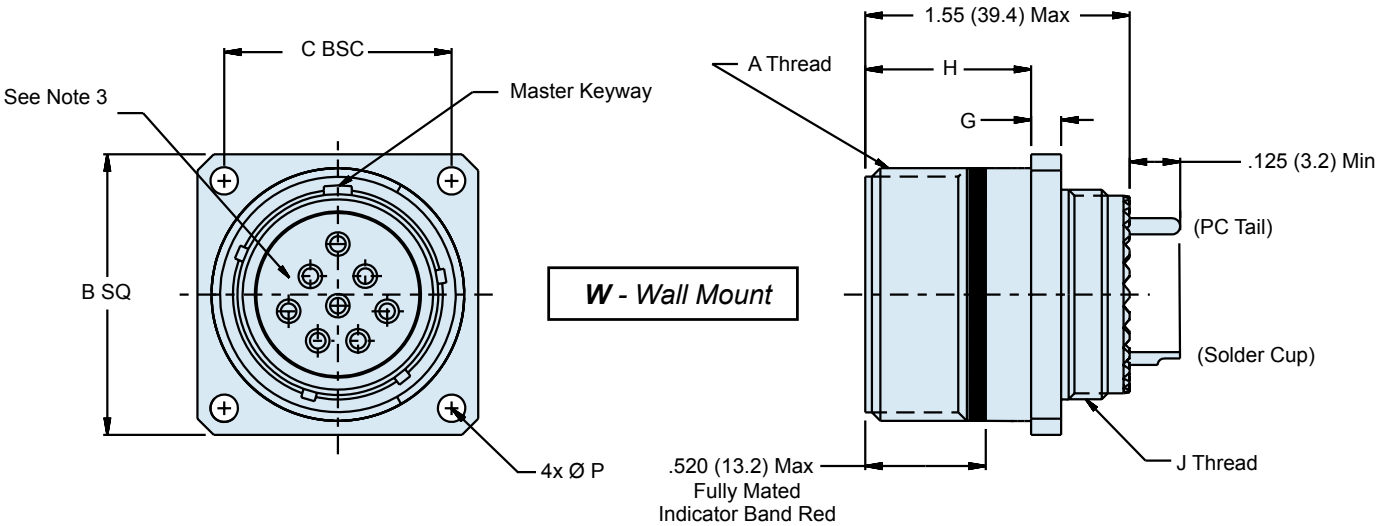

Consult Factory for Alternative PC Tail Lengths

© 2010 Glenair, Inc.

GLENAIR, INC. • 1211 AIR WAY • GLENDALE, CA 91201-2497 • 818-247-6000 • FAX 818-500-9912
www.glenair.com E-Mail: sales@glenair.com

240-383W
MIL-DTL-38999 Series III Filter Connector
Wall Mount Receptacle

Glenair®

TABLE I: CONNECTOR CLASS

SYM	CLASS	MATERIAL	FINISH DESCRIPTION
M	Environmental	Aluminum	Electroless Nickel
MT	Environmental	Aluminum	Nickel Fluorocarbon Polymer (Ni-PTFE)
NF	Environmental	Aluminum	Cad. O.D. Over Electroless Nickel
P	Environmental	Stainless	Electro-Deposited Nickel
XM	Environmental	Composite	Electroless Nickel
XMT	Environmental	Composite	Nickel Fluorocarbon Polymer (Ni-PTFE)
XW	Environmental	Composite	Cad. O.D. Over Electroless Nickel
ZN	Environmental	Aluminum	Zinc-Nickel Over Electroless Nickel
H2*	Hermetic	Stainless	Electroless Nickel

* Some dimensions do not apply, see sales drawing 240-383JH2

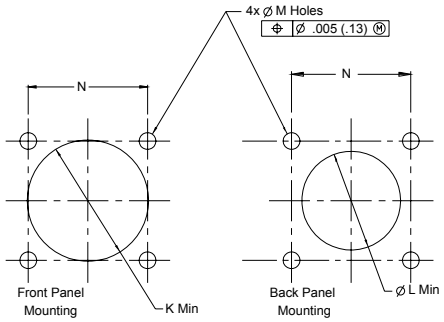

TABLE II: CAPACITOR ARRAY CODE CAPACITANCE RANGE

CLASS	PI - CIRCUIT (pF)	C - CIRCUIT (pF)
X*	160,000 - 240,000	80,000 - 120,000
Y*	80,000 - 120,000	40,000 - 60,000
Z*	60,000 - 90,000	30,000 - 45,000
A	38,000 - 56,000	19,000 - 28,000
B	32,000 - 45,000	16,000 - 22,500
C	18,000 - 33,000	9,000 - 16,500
D	8,000 - 12,000	4,000 - 6,000
E	3,300 - 5,000	1,650 - 2,500
F	800 - 1,300	400 - 650
G	400 - 600	200 - 300

* Reduced DWV – Please consult factory.

MIL-DTL-38999 Series III Square Flange Panel Cutouts

Shell Size Code	Shell Size	ø K Min	ø L Min	M Holes	N BSC	P Ø ± .010
A	09	.656 (16.7)	.516 (13.1)	.133 (3.4) .123 (3.1)	.719 (18.3)	.128 (3.3)
B	11	.796 (20.2)	.625 (15.9)	.133 (3.4) .123 (3.1)	.812 (20.6)	
C	13	.922 (23.4)	.750 (19.1)	.133 (3.4) .123 (3.1)	.906 (23.0)	
D	15	1.047 (26.6)	.906 (23.0)	.133 (3.4) .123 (3.1)	.969 (24.6)	
E	17	1.219 (31.0)	1.016 (25.8)	.133 (3.4) .123 (3.1)	1.062 (27.0)	
F	19	1.297 (32.9)	1.141 (29.0)	.133 (3.4) .123 (3.1)	1.156 (29.4)	
G	21	1.422 (36.1)	1.266 (32.2)	.133 (3.4) .123 (3.1)	1.250 (31.8)	
H	23	1.547 (39.3)	1.375 (34.9)	.159 (4.0) .149 (3.8)	1.375 (34.9)	.156 (4.0)
J	25	1.672 (42.5)	1.484 (37.7)	.155 (3.9) .145 (3.7)	1.500 (38.1)	

WALL MOUNT

SHELL SIZE CODE	SHELL SIZE	A THREAD	B SQ	C BSC	D BSC	E	F	G	H	J THREAD
A	09	.6250- .1P- .3L-TS-2A	0.949 (24.1) 0.925 (23.5)	.719 (18.3)	.594 (15.1)	.136 (3.5) .120 (3.0)	.224 (5.7) .208 (5.3)	.143 (3.6) .083 (2.1)	.820 (20.8) .771 (19.6)	M12 X 1.0-6g 0.100R
B	11	.7500- .1P- .3L-TS-2A	1.043 (26.5) 1.019 (25.9)	.812 (20.6)	.719 (18.3)	.136 (3.5) .120 (3.0)	.202 (5.1) .186 (4.7)		.820 (20.8) .771 (19.6)	M15 X 1.0-6g 0.100R
C	13	.8750- .1P- .3L-TS-2A	1.138 (28.9) 1.114 (28.3)	.906 (23.0)	.812 (20.6)	.136 (3.5) .120 (3.0)	.202 (5.1) .186 (4.7)		.820 (20.8) .771 (19.6)	M18 X 1.0-6g 0.100R
D	15	1.000- .1P- .3L-TS-2A	1.232 (31.3) 1.208 (30.7)	.969 (24.6)	.906 (23.0)	.136 (3.5) .120 (3.0)	.202 (5.1) .165 (4.2)		.820 (20.8) .771 (19.6)	M22 X 1.0-6g 0.100R
E	17	1.1875- .1P- .3L-TS-2A	1.323 (33.6) 1.299 (33.0)	1.062 (27.0)	.969 (24.6)	.136 (3.5) .120 (3.0)	.202 (5.1) .186 (4.7)		.820 (20.8) .771 (19.6)	M25 X 1.0-6g 0.100R
F	19	1.2500- .1P- .3L-TS-2A	1.449 (36.8) 1.425 (36.2)	1.156 (29.4)	1.062 (27.0)	.136 (3.5) .120 (3.0)	.202 (5.1) .186 (4.7)		.820 (20.8) .771 (19.6)	M28 X 1.0-6g 0.100R
G	21	1.3750- .1P- .3L-TS-2A	1.575 (40.0) 1.551 (39.4)	1.250 (31.8)	1.156 (29.4)	.136 (3.5) .120 (3.0)	.202 (5.1) .186 (4.7)	.171 (4.3) .083 (2.1)	.790 (20.1) .741 (18.8)	M31 X 1.0-6g 0.100R
H	23	1.5000- .1P- .3L-TS-2A	1.701 (43.2) 1.677 (42.6)	1.375 (34.9)	1.250 (31.8)	.162 (4.1) .146 (3.7)	.250 (6.4) .234 (5.9)		.790 (20.1) .741 (18.8)	M34 X 1.0-6g 0.100R
J	25	1.6250- .1P- .3L-TS-2A	1.823 (46.3) 1.799 (45.7)	1.500 (38.1)	1.375 (34.9)	.162 (4.1) .146 (3.7)	.250 (6.4) .234 (5.9)		.790 (20.1) .741 (18.8)	M37 X 1.0-6g 0.100R

© 2010 Glenair, Inc.
CAGE CODE 06324
Printed in U.S.A.

240-383J
MIL-DTL-38999 Series III Filter Connector
Jam Nut Receptacle

Filter Connector Product Code

MIL-DTL-38999 Series III

Insert Arrangement
IAW MIL-STD-1560

Contact Gender
P *- Pin*
S *- Socket*

Filter Type
P *- Pi Circuit*
C *- C Circuit*

Capacitance
(See Table II)

Alternate Key Position
Per MIL-DTL-38999
A, B, C, D, E, N = Normal

240	-	383	J	P	15-35	P	S	P	A	N	N

Shell Style
J *- Jam Nut*

Connector Class
(See Table I)

Termination
S *- Solder Cup*
P *- PC Tail*

Flange Mounting Style
N *- Not Applicable*

J - Jam Nut

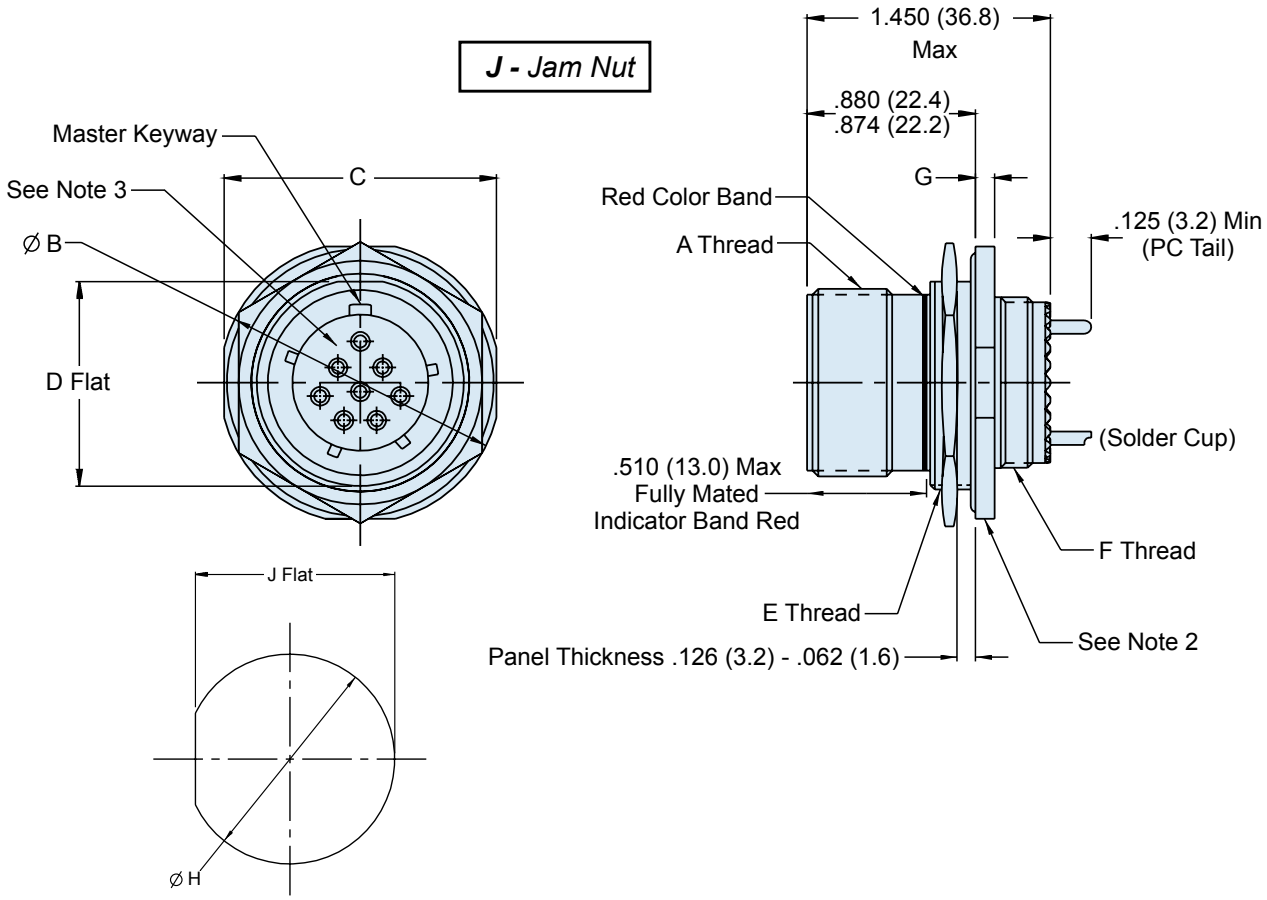

© 2010 Glenair, Inc.

GLENAIR, INC. • 1211 AIR WAY • GLENDALE, CA 91201-2497 • 818-247-6000 • FAX 818-500-9912
www.glenair.com
E-Mail: sales@glenair.com

240-383J
MIL-DTL-38999 Series III Filter Connector
Jam Nut Receptacle

Glenair®

TABLE I: CONNECTOR CLASS

SYM	CLASS	MATERIAL	FINISH DESCRIPTION
M	Environmental	Aluminum	Electroless Nickel
MT	Environmental	Aluminum	Nickel Fluorocarbon Polymer (Ni-PTFE)
NF	Environmental	Aluminum	Cad. O.D. Over Electroless Nickel
P	Environmental	Stainless	Electro-Deposited Nickel
XM	Environmental	Composite	Electroless Nickel
XMT	Environmental	Composite	Nickel Fluorocarbon Polymer (Ni-PTFE)
XW	Environmental	Composite	Cad. O.D. Over Electroless Nickel
ZN	Environmental	Aluminum	Zinc-Nickel Over Electroless Nickel
H2*	Hermetic	Stainless	Electroless Nickel

* Some dimensions do not apply, see sales drawing 240-383JH2

TABLE II: CAPACITOR ARRAY CODE CAPACITANCE RANGE

CLASS	PI - CIRCUIT (pF)	C - CIRCUIT (pF)
X*	160,000 - 240,000	80,000 - 120,000
Y*	80,000 - 120,000	40,000 - 60,000
Z*	60,000 - 90,000	30,000 - 45,000
A	38,000 - 56,000	19,000 - 28,000
B	32,000 - 45,000	16,000 - 22,500
C	18,000 - 33,000	9,000 - 16,500
D	8,000 - 12,000	4,000 - 6,000
E	3,300 - 5,000	1,650 - 2,500
F	800 - 1,300	400 - 650
G	400 - 600	200 - 300

* Reduced DWV – Please consult factory.

MIL-DTL-38999 Series III Jam Nut Panel Cutout

SHELL SIZE CODE	SHELL SIZE	∅ H	J
A	09	.710 (18.0) .700 (17.8)	.670 (17.0) .660 (16.8)
B	11	.835 (21.2) .825 (21.0)	.771 (19.6) .761 (19.3)
C	13	1.020 (25.9) 1.010 (25.7)	.955 (24.3) .945 (24.0)
D	15	1.145 (29.1) 1.135 (28.8)	1.085 (27.6) 1.075 (27.3)
E	17	1.270 (32.3) 1.260 (32.0)	1.210 (30.7) 1.200 (30.5)
F	19	1.395 (35.4) 1.385 (35.2)	1.335 (33.9) 1.325 (33.7)
G	21	1.520 (38.6) 1.510 (38.4)	1.460 (37.1) 1.450 (36.8)
H	23	1.645 (41.8) 1.635 (41.5)	1.585 (40.3) 1.575 (40.0)
J	25	1.770 (45.0) 1.760 (44.7)	1.710 (43.4) 1.700 (43.2)

Consult Factory for Additional Filter Types, TVS Diodes, and other Custom Configurations.

JAM NUT MOUNT

SHELL SIZE CODE	SHELL SIZE	A THREAD	∅ B	C	D	E THREAD	F THREAD	G
A	09	.6250- .1P- .3L-TS-2A	1.262 (32.1) 1.177 (29.9)	1.079 (27.4) 1.047 (26.6)	.655 (16.6) .645 (16.4)	M17 X 1.0-6g 0.100R	M12 X 1.0-6g 0.100R	.122 (3.1) .083 (2.1)
B	11	.7500- .1P- .3L-TS-2A	1.386 (35.2) 1.362 (34.6)	1.268 (32.2) 1.236 (31.4)	.755 (19.2) .745 (18.9)	M20 X 1.0-6g 0.100R	M15 X 1.0-6g 0.100R	.122 (3.1) .083 (2.1)
C	13	.8750- .1P- .3L-TS-2A	1.512 (38.4) 1.488 (37.8)	1.390 (35.3) 1.358 (34.5)	.942 (23.9) .932 (23.7)	M25 X 1.0-6g 0.100R	M18 X 1.0-6g 0.100R	.122 (3.1) .083 (2.1)
D	15	1.000- .1P- .3L-TS-2A	1.638 (41.6) 1.614 (41.0)	1.516 (38.5) 1.484 (37.7)	1.068 (27.1) 1.058 (26.8)	M28 X 1.0-6g 0.100R	M22 X 1.0-6g 0.100R	.122 (3.1) .083 (2.1)
E	17	1.1875- .1P- .3L-TS-2A	1.764 (44.8) 1.740 (44.2)	1.642 (41.7) 1.610 (40.9)	1.191 (30.3) 1.181 (30.0)	M32 X 1.0-6g 0.100R	M25 X 1.0-6g 0.100R	.122 (3.1) .083 (2.1)
F	19	1.2500- .1P- .3L-TS-2A	1.949 (49.5) 1.925 (48.9)	1.827 (46.4) 1.795 (45.6)	1.316 (33.4) 1.306 (33.2)	M35 X 1.0-6g 0.100R	M28 X 1.0-6g 0.100R	.154 (3.9) .114 (2.9)
G	21	1.3750- .1P- .3L-TS-2A	2.075 (52.7) 2.051 (52.1)	1.953 (49.6) 1.921 (48.8)	1.441 (36.6) 1.431 (36.3)	M38 X 1.0-6g 0.100R	M31 X 1.0-6g 0.100R	.154 (3.9) .114 (2.9)
H	23	1.5000- .1P- .3L-TS-2A	2.201 (55.9) 2.177 (55.3)	2.079 (52.8) 2.047 (52.0)	1.566 (39.8) 1.556 (39.5)	M41 X 1.0-6g 0.100R	M34 X 1.0-6g 0.100R	.154 (3.9) .114 (2.9)
J	25	1.6250- .1P- .3L-TS-2A	2.323 (59.0) 2.299 (58.4)	2.205 (56.0) 2.173 (55.2)	1.691 (43.0) 1.681 (42.7)	M44 X 1.0-6g 0.100R	M37 X 1.0-6g 0.100R	.154 (3.9) .114 (2.9)

© 2010 Glenair, Inc. CAGE CODE 06324 Printed in U.S.A.

240-383S
MIL-DTL-38999 Series III Filter Connector
Jam Nut Receptacle
with Crimp Removable Socket Contacts

Filter Connector Product Code

MIL-DTL-38999 Series III

Insert Arrangement
IAW MIL-STD-1560

Contact Gender
P - Pin
S - Socket

Filter Type
P - Pi Circuit
C - C Circuit

Capacitance
(See Table II)

Alternate Key Position
Per MIL-DTL-38999
A, B, C, D, E, N = Normal

240	-	383	S	P	15-35	P	C	P	A	N	N

Shell Style
S - Crimp Removable Jam Nut

Connector Class
(See Table I)

Termination
C - Crimp

Flange Mounting Style
N - Not Applicable

NOTE: Crimp removable socket contacts to conform to MIL-C-39029/57-358, Size 16, MIL-C-39029/57-357 Size 20, and MIL-C-39029/57-354 Size 22D (Supplied loose).

***S** - Jam Nut with Crimp Contacts*

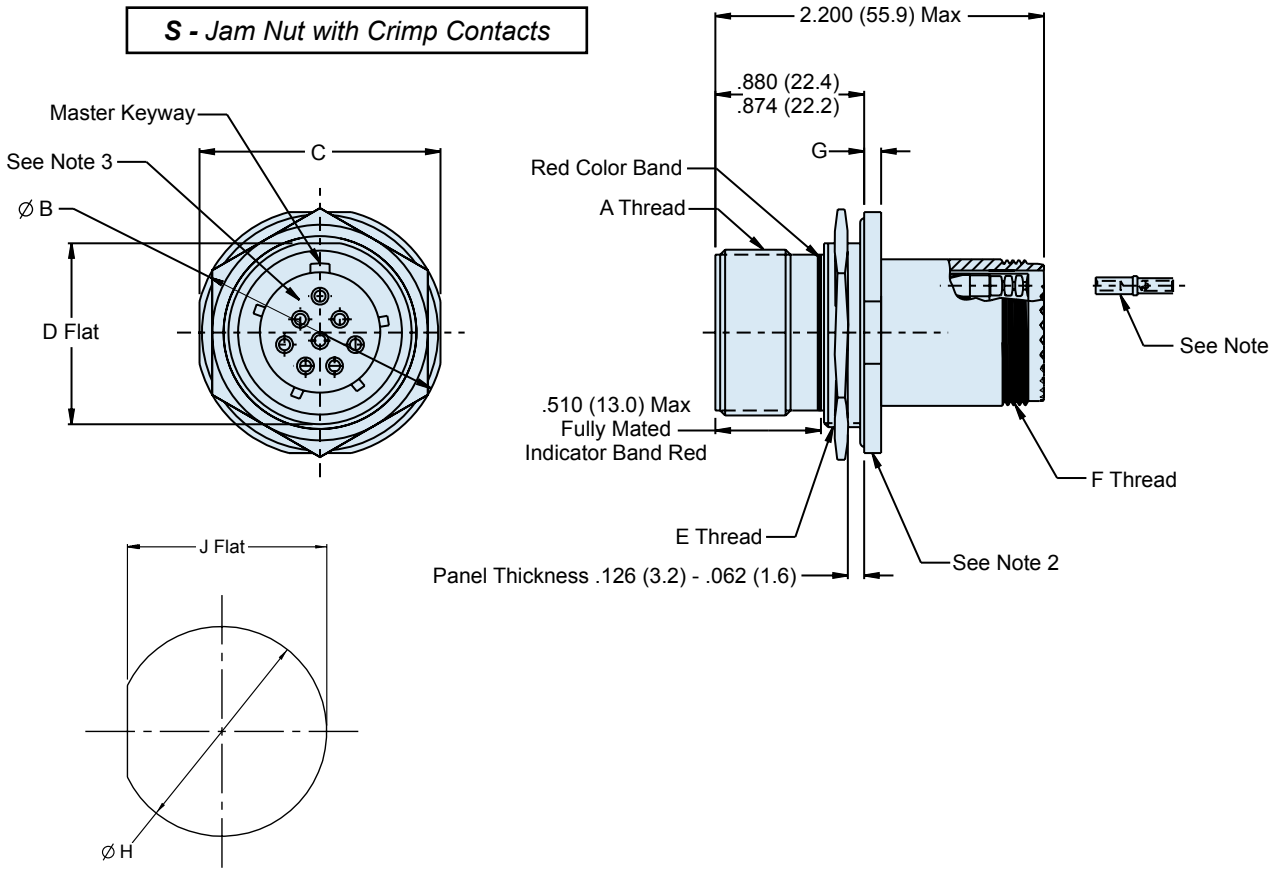

© 2010 Glenair, Inc. CAGE CODE 06324 Printed in U.S.A.

240-383S
MIL-DTL-38999 Series III Filter Connector
Jam Nut Receptacle
with Crimp Removable Socket Contacts

Glenair®

TABLE I: CONNECTOR CLASS

SYM	CLASS	MATERIAL	FINISH DESCRIPTION
M	Environmental	Aluminum	Electroless Nickel
MT	Environmental	Aluminum	Nickel Fluorocarbon Polymer (Ni-PTFE)
NF	Environmental	Aluminum	Cad. O.D. Over Electroless Nickel
P	Environmental	Stainless	Electro-Deposited Nickel
XM	Environmental	Composite	Electroless Nickel
XMT	Environmental	Composite	Nickel Fluorocarbon Polymer (Ni-PTFE)
XW	Environmental	Composite	Cad. O.D. Over Electroless Nickel
ZN	Environmental	Aluminum	Zinc-Nickel Over Electroless Nickel
H2*	Hermetic	Stainless	Electroless Nickel

* Some dimensions do not apply, see sales drawing 240-383JH2

TABLE II: CAPACITOR ARRAY CODE CAPACITANCE RANGE

CLASS	PI - CIRCUIT (pF)	C - CIRCUIT (pF)
X*	160,000 - 240,000	80,000 - 120,000
Y*	80,000 - 120,000	40,000 - 60,000
Z*	60,000 - 90,000	30,000 - 45,000
A	38,000 - 56,000	19,000 - 28,000
B	32,000 - 45,000	16,000 - 22,500
C	18,000 - 33,000	9,000 - 16,500
D	8,000 - 12,000	4,000 - 6,000
E	3,300 - 5,000	1,650 - 2,500
F	800 - 1,300	400 - 650
G	400 - 600	200 - 300

* Reduced DWV – Please consult factory.

MIL-DTL-38999 Series III Jam Nut Panel Cutout

SHELL SIZE CODE	SHELL SIZE	∅ H	J
A	09	.710 (18.0) .700 (17.8)	.670 (17.0) .660 (16.8)
B	11	.835 (21.2) .825 (21.0)	.771 (19.6) .761 (19.3)
C	13	1.020 (25.9) 1.010 (25.7)	.955 (24.3) .945 (24.0)
D	15	1.145 (29.1) 1.135 (28.8)	1.085 (27.6) 1.075 (27.3)
E	17	1.270 (32.3) 1.260 (32.0)	1.210 (30.7) 1.200 (30.5)
F	19	1.395 (35.4) 1.385 (35.2)	1.335 (33.9) 1.325 (33.7)
G	21	1.520 (38.6) 1.510 (38.4)	1.460 (37.1) 1.450 (36.8)
H	23	1.645 (41.8) 1.635 (41.5)	1.585 (40.3) 1.575 (40.0)
J	25	1.770 (45.0) 1.760 (44.7)	1.710 (43.4) 1.700 (43.2)

Consult Factory for Additional Filter Types, TVS Diodes, and other Custom Configurations.

JAM NUT MOUNT

SHELL SIZE CODE	SHELL SIZE	A THREAD	∅ B	C	D	E THREAD	F THREAD	G
A	09	.6250- .1P- .3L-TS-2A	1.262 (32.1) 1.248 (31.7)	1.079 (27.4) 1.047 (26.6)	.655 (16.6) .645 (16.4)	M17 X 1.0-6g 0.100R	M12 X 1.0-6g 0.100R	.122 (3.1) .083 (2.1)
B	11	.7500- .1P- .3L-TS-2A	1.386 (35.2) 1.362 (34.6)	1.268 (32.2) 1.236 (31.4)	.755 (19.2) .745 (18.9)	M20 X 1.0-6g 0.100R	M15 X 1.0-6g 0.100R	.122 (3.1) .083 (2.1)
C	13	.8750- .1P- .3L-TS-2A	1.512 (38.4) 1.488 (37.8)	1.390 (35.3) 1.358 (34.5)	.942 (23.9) .932 (23.7)	M25 X 1.0-6g 0.100R	M18 X 1.0-6g 0.100R	.122 (3.1) .083 (2.1)
D	15	1.000- .1P- .3L-TS-2A	1.638 (41.6) 1.614 (41.0)	1.516 (38.5) 1.484 (37.7)	1.068 (27.1) 1.058 (26.9)	M28 X 1.0-6g 0.100R	M22 X 1.0-6g 0.100R	.122 (3.1) .083 (2.1)
E	17	1.1875- .1P- .3L-TS-2A	1.764 (44.8) 1.740 (44.2)	1.642 (41.7) 1.610 (40.9)	1.191 (30.3) 1.181 (30.0)	M32 X 1.0-6g 0.100R	M25 X 1.0-6g 0.100R	.122 (3.1) .083 (2.1)
F	19	1.2500- .1P- .3L-TS-2A	1.949 (49.5) 1.925 (48.9)	1.827 (46.4) 1.795 (45.6)	1.316 (33.4) 1.306 (33.2)	M35 X 1.0-6g 0.100R	M28 X 1.0-6g 0.100R	.154 (3.9) .114 (2.9)
G	21	1.3750- .1P- .3L-TS-2A	2.075 (52.7) 2.051 (52.1)	1.953 (49.6) 1.921 (48.8)	1.441 (36.6) 1.431 (36.3)	M38 X 1.0-6g 0.100R	M31 X 1.0-6g 0.100R	.154 (3.9) .114 (2.9)
H	23	1.5000- .1P- .3L-TS-2A	2.201 (55.9) 2.177 (55.3)	2.079 (52.8) 2.047 (52.0)	1.566 (39.8) 1.556 (39.5)	M41 X 1.0-6g 0.100R	M34 X 1.0-6g 0.100R	.154 (3.9) .114 (2.9)
J	25	1.6250- .1P- .3L-TS-2A	2.323 (59.0) 2.299 (58.4)	2.205 (56.0) 2.173 (55.2)	1.691 (43.0) 1.681 (42.7)	M44 X 1.0-6g 0.100R	M37 X 1.0-6g 0.100R	.154 (3.9) .114 (2.9)

© 2010 Glenair, Inc. CAGE CODE 06324 Printed in U.S.A.

240-383D
MIL-DTL-38999 Series III Filter Connector
Dual Flange Wall Mount Receptacle with P.C.Tails

Filter Connector Product Code

MIL-DTL-38999 Series III

Contact Gender
P - Pin
S - Socket

Alternate Key Position
Per MIL-DTL-38999
A, B, C, D, E, N = Normal

Insert Arrangement
IAW MIL-STD-1560

Filter Type
P - Pi Circuit
C - C Circuit

Capacitance
(See Table II)

240	-	383	D	P	15-35	P	P	P	A	N	N

Shell Style
D - Dual Flange Wall Mount

Connector Class
(See Table I)

Termination
P - PC Tail

Flange Mounting Style
N - Not Applicable/Mfgs. Option

***D** - Dual Flange Wall Mount*

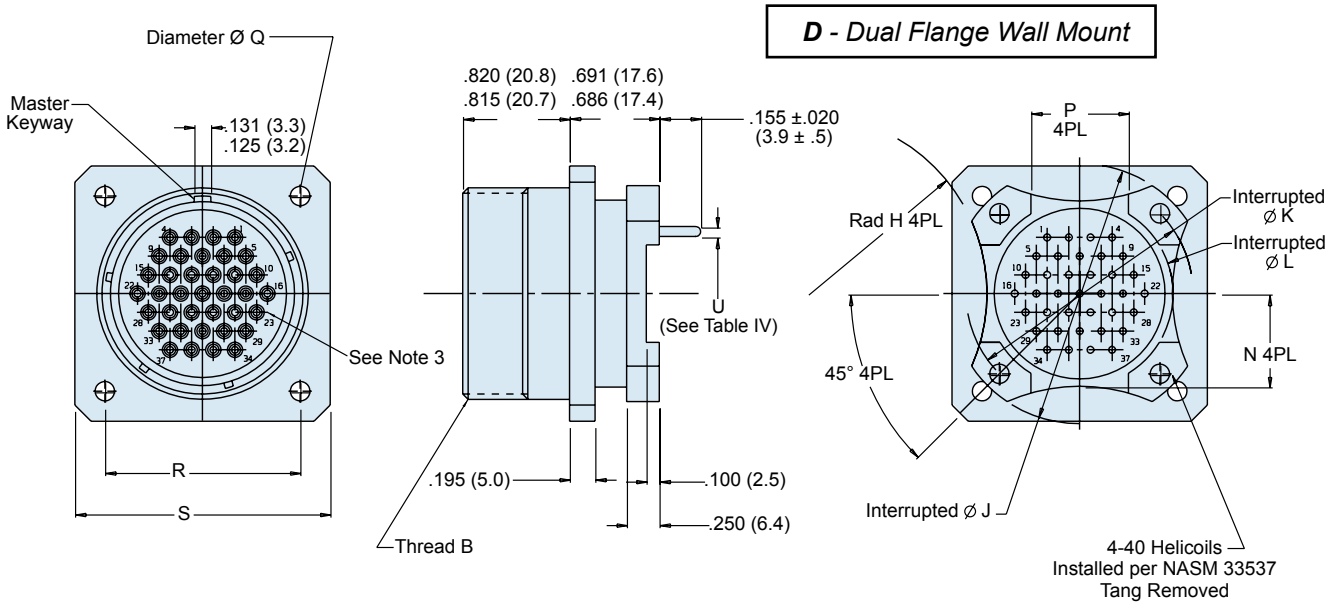

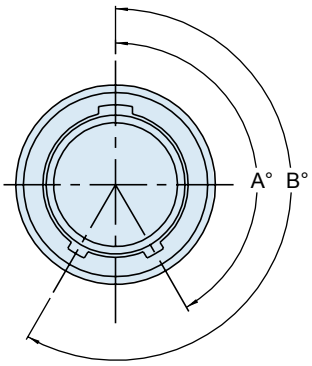

Normal and Alternate Position
Key Rotation

TABLE IV
ALTERNATE KEY AND KEYWAY POSITION

Position	A°	B°
A	150°	210°
B	75°	210°
C	95°	230°
D	140°	275°

TABLE V: PC TAIL DIAMETER

Contact Size	ØU
22D	.018/.021 (0.5/0.5)
20	.029/.031 (0.7/0.8)
16	.038/.042 (1.0/1.1)

© 2010 Glenair, Inc.
CAGE CODE 06324
Printed in U.S.A.

240-383D
MIL-DTL-38999 Series III Filter Connector
Dual Flange Wall Mount Receptacle with P.C.Tails

Glenair®

TABLE I: CONNECTOR CLASS

SYM	CLASS	MATERIAL	FINISH DESCRIPTION
M	Environmental	Aluminum	Electroless Nickel
MT	Environmental	Aluminum	Nickel Fluorocarbon Polymer (Ni-PTFE)
NF	Environmental	Aluminum	Cad. O.D. Over Electroless Nickel
P	Environmental	Stainless	Electro-Deposited Nickel
XM	Environmental	Composite	Electroless Nickel
XMT	Environmental	Composite	Nickel Fluorocarbon Polymer (Ni-PTFE)
XW	Environmental	Composite	Cad. O.D. Over Electroless Nickel
ZN	Environmental	Aluminum	Zinc-Nickel Over Electroless Nickel
H2*	Hermetic	Stainless	Electroless Nickel

* Some dimensions do not apply, see sales drawing 240-383JH2

Consult Factory for Additional Filter Types, TVS Diodes, and other Custom Configurations.

TABLE II: CAPACITOR ARRAY CODE CAPACITANCE RANGE

CLASS	PI - CIRCUIT (pF)	C - CIRCUIT (pF)
X*	160,000 - 240,000	80,000 - 120,000
Y*	80,000 - 120,000	40,000 - 60,000
Z*	60,000 - 90,000	30,000 - 45,000
A	38,000 - 56,000	19,000 - 28,000
B	32,000 - 45,000	16,000 - 22,500
C	18,000 - 33,000	9,000 - 16,500
D	8,000 - 12,000	4,000 - 6,000
E	3,300 - 5,000	1,650 - 2,500
F	800 - 1,300	400 - 650
G	400 - 600	200 - 300

* Reduced DWV – Please consult factory.

TABLE III: DIMENSIONS

SHELL SIZE	B THREAD (PLATED)	P +/- .01 (.25)	R BSC	S +/- .012 (.3)	ØJ +/- .005 (.13)	ØK BSC	ØL +/- .005 (.13)	H +/- .020 (.51)	N +/- .020 (.51)	ØQ ± .010
9	.625-.1P-.3L-TS-2A	.225 (5.7)	.719 (18.3)	.937 (23.8)	1.016 (25.8)	.752 (19.1)	.532 (13.5)	.225 (5.7)	.275 (7.0)	.128 (3.3)
11	.7500- .1P- .3L-TS-2A	.250 (6.4)	.812 (20.6)	1.181 (30.0)	1.062 (27.0)	.850 (21.6)	.595 (15.1)	.250 (6.4)	.290 (7.4)	
13	.8750- .1P- .3L-TS-2A	.250 (6.4)	.906 (23.0)	1.277 (32.4)	1.250 (31.8)	.994 (25.2)	.720 (18.3)	.375 (9.5)	.370 (9.4)	
15	1.000- .1P- .3L-TS-2A	.325 (8.2)	.969 (24.6)	1.371 (34.8)	1.375 (34.9)	1.119 (28.4)	.843 (21.4)	.438 (11.1)	.440 (11.2)	
17	1.1875- .1P- .3L-TS-2A	.375 (9.5)	1.062 (27.0)	1.462 (37.1)	1.500 (38.1)	1.237 (31.4)	1.000 (25.4)	.562 (14.3)	.495 (12.6)	
19	1.2500- .1P- .3L-TS-2A	.500 (12.7)	1.156 (29.4)	1.588 (40.3)	1.625 (41.3)	1.379 (35.0)	1.125 (28.6)	.875 (22.2)	.540 (13.7)	
21	1.3750- .1P- .3L-TS-2A	.562 (14.3)	1.250 (31.8)	1.714 (43.5)	1.750 (44.5)	1.489 (37.8)	1.240 (31.5)	1.170 (29.7)	.625 (15.9)	
23	1.5000- .1P- .3L-TS-2A	.688 (17.5)	1.375 (34.9)	1.840 (46.7)	1.875 (47.6)	1.619 (41.1)	1.328 (33.7)	1.250 (31.8)	.660 (16.8)	.156 (4.0)
25	1.6250- .1P- .3L-TS-2A	.750 (19.1)	1.500 (38.1)	1.962 (49.8)	2.000 (50.8)	1.744 (44.3)	1.453 (36.9)	1.375 (34.9)	.740 (18.8)	

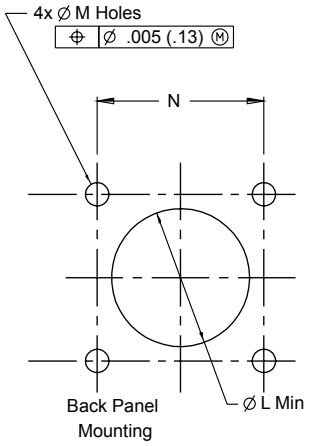

Panel Cutout Dimensions

Shell Size	ø L Min	M Holes	N BSC
09	.516 (13.1)	.133 (3.4) .123 (3.1)	.719 (18.3)
11	.625 (15.9)	.133 (3.4) .123 (3.1)	.812 (20.6)
13	.750 (19.1)	.133 (3.4) .123 (3.1)	.906 (23.0)
15	.906 (23.0)	.133 (3.4) .123 (3.1)	.969 (24.6)
17	1.016 (25.8)	.133 (3.4) .123 (3.1)	1.062 (27.0)
19	1.141 (29.0)	.133 (3.4) .123 (3.1)	1.156 (29.4)
21	1.266 (32.2)	.133 (3.4) .123 (3.1)	1.250 (31.8)
23	1.375 (34.9)	.159 (4.0) .149 (3.8)	1.375 (34.9)
25	1.484 (37.7)	.155 (3.9) .145 (3.7)	1.500 (38.1)

© 2010 Glenair, Inc.

240-383E
MIL-DTL-38999 Series III Filter Connector
Dual Flange Jam Nut Receptacle

Filter Connector Product Code

MIL-DTL-38999 Series III

Insert Arrangement
IAW MIL-STD-1560

Contact Gender
P - Pin
S - Socket

Filter Type
P - Pi Circuit
C - C Circuit

Capacitance
(See Table II)

Alternate Key Position
Per MIL-DTL-38999
A, B, C, D, E, N = Normal

240	-	383	E	P	15-35	P	P	P	A	N	N

Shell Style
E - Dual Flange Jam Nut

Connector Class
(See Table I)

Termination
P - PC Tail

Flange Mounting Style
N - Not Applicable

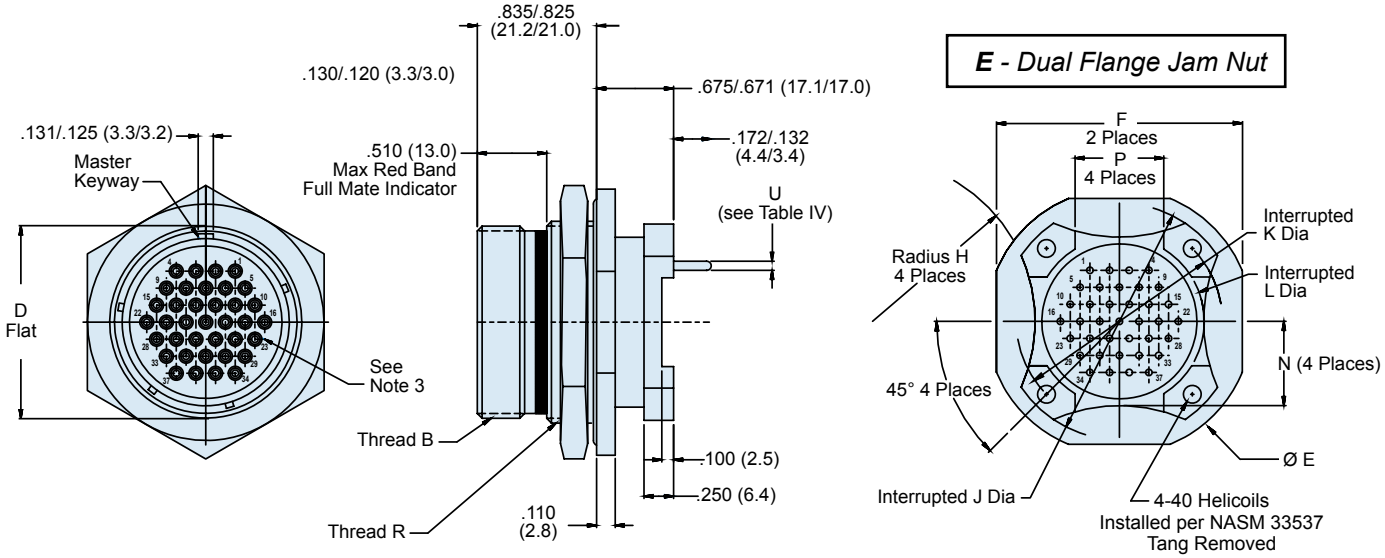

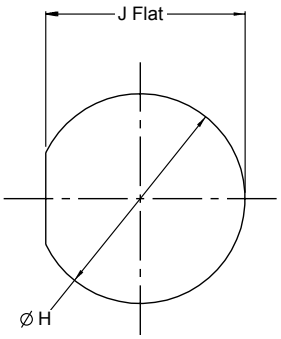

TABLE IV: PC TAIL DIAMETER

Contact Size	Ø U
22D	.018/.021 (0.5/0.5)
20	.029/.031 (0.7/0.8)
16	.038/.042 (1.0/1.1)

© 2010 Glenair, Inc. CAGE CODE 06324 Printed in U.S.A.

240-383E
MIL-DTL-38999 Series III Filter Connector
Dual Flange Jam Nut Receptacle

Glenair®

TABLE I: CONNECTOR CLASS

SYM	CLASS	MATERIAL	FINISH DESCRIPTION
M	Environmental	Aluminum	Electroless Nickel
MT	Environmental	Aluminum	Nickel Fluorocarbon Polymer (Ni-PTFE)
NF	Environmental	Aluminum	Cad. O.D. Over Electroless Nickel
P	Environmental	Stainless	Electro-Deposited Nickel
XM	Environmental	Composite	Electroless Nickel
XMT	Environmental	Composite	Nickel Fluorocarbon Polymer (Ni-PTFE)
XW	Environmental	Composite	Cad. O.D. Over Electroless Nickel
ZN	Environmental	Aluminum	Zinc-Nickel Over Electroless Nickel
H2*	Hermetic	Stainless	Electroless Nickel

* Some dimensions do not apply, see sales drawing 240-383JH2

MIL-DTL-38999 Series III Jam Nut Panel Cutout

SHELL SIZE	∅ H	J
09	.710 (18.0) .700 (17.8)	.670 (17.0) .660 (16.8)
11	.835 (21.2) .825 (21.0)	.771 (19.6) .761 (19.3)
13	1.020 (25.9) 1.010 (25.7)	.955 (24.3) .945 (24.0)
15	1.145 (29.1) 1.135 (28.8)	1.085 (27.6) 1.075 (27.3)
17	1.270 (32.3) 1.260 (32.0)	1.210 (30.7) 1.200 (30.5)
19	1.395 (35.4) 1.385 (35.2)	1.335 (33.9) 1.325 (33.7)
21	1.520 (38.6) 1.510 (38.4)	1.460 (37.1) 1.450 (36.8)
23	1.645 (41.8) 1.635 (41.5)	1.585 (40.3) 1.575 (40.0)
25	1.770 (45.0) 1.760 (44.7)	1.710 (43.4) 1.700 (43.2)

TABLE II: CAPACITOR ARRAY CODE CAPACITANCE RANGE

CLASS	PI - CIRCUIT (pF)	C - CIRCUIT (pF)
X*	160,000 - 240,000	80,000 - 120,000
Y*	80,000 - 120,000	40,000 - 60,000
Z*	60,000 - 90,000	30,000 - 45,000
A	38,000 - 56,000	19,000 - 28,000
B	32,000 - 45,000	16,000 - 22,500
C	18,000 - 33,000	9,000 - 16,500
D	8,000 - 12,000	4,000 - 6,000
E	3,300 - 5,000	1,650 - 2,500
F	800 - 1,300	400 - 650
G	400 - 600	200 - 300

* Reduced DWV – Please consult factory.

Consult Factory for Additional Filter Types, TVS Diodes, and other Custom Configurations.

TABLE III: DIMENSIONS

SHELL SIZE	B Thread (Plated)	D ± .005	Ø E ± .012	F ± .016	P ±.010 (0.25)	R Thread Metric (Plated)	J Dia ±.005 (0.13)	K Dia Basic	L Dia ±.005 (0.13)	H ±.020 (0.51)	N ±.020 (0.51)
9	.625- . 1P- .3L-TS-2A	.651 (16.5)	1.250 (31.8)	1.063 (27.0)	.225 (5.7)	M17 x 1-6g-0.10R	1.016 (25.8)	.752 (19.1)	.532 (13.5)	.225 (5.7)	.275 (7.0)
11	.7500- .1P- .3L-TS-2A	.751 (19.1)	1.377 (35.0)	1.259 (32.0)	.250 (6.4)	M20 x 1-6g-0.10R	1.062 (27.0)	.850 (21.6)	.595 (15.1)	.250 (6.4)	.290 (7.4)
13	.8750- .1P- .3L-TS-2A	.937 (23.8)	1.500 (38.1)	1.374 (34.9)	.250 (6.4)	.M25 x 1-6g-0.10R	1.250 (31.8)	.994 (25.2)	.720 (18.3)	.375 (9.5)	.370 (9.4)
15	1.0000- .1P- .3L-TS-2A	1.063 (27.0)	1.625 (41.3)	1.500 (38.1)	.325 (8.2)	M28 x 1-6g-0.10R	1.375 (34.9)	1.119 (28.4)	.843 (21.4)	.438 (11.1)	.440 (11.2)
17	1.8750- .1P- .3L-TS-2A	1.187 (30.2)	1.750 (44.5)	1.625 (41.3)	.375 (9.5)	M32 x 1-6g-0.10R	1.500 (38.1)	1.237 (31.4)	1.000 (25.4)	.562 (14.3)	.495 (12.6)
19	1.2500- .1P- .3L-TS-2A	1.311 (33.3)	1.937 (49.2)	1.822 (46.3)	.500 (12.7)	M35 x 1-6g-0.10R	1.625 (41.3)	1.379 (35.0)	1.125 (28.6)	.875 (22.2)	.540 (13.7)
21	1.3750- .1P- .3L-TS-2A	1.434 (36.4)	2.063 (52.4)	1.940 (49.3)	.562 (14.3)	M38 x 1-6g-0.10R	1.750 (44.5)	1.489 (37.8)	1.240 (31.5)	1.170 (29.7)	.625 (15.9)
23	1.5000- .1P- .3L-TS-2A	1.561 (39.7)	2.190 (55.6)	2.073 (52.7)	.688 (17.5)	M41 x 1-6g-0.10R	1.875 (47.6)	1.619 (41.1)	1.328 (33.7)	1.250 (31.8)	.660 (16.8)
25	1.6250- .1P- .3L-TS-2A	1.687 (42.9)	2.311 (58.7)	2.189 (55.6)	.750 (19.1)	M44 x 1-6g-0.10R	2.000 (50.8)	1.744 (44.3)	1.453 (36.9)	1.375 (34.9)	.740 (18.8)

© 2010 Glenair, Inc. CAGE CODE 06324 Printed in U.S.A.

240-383R
MIL-DTL-38999 Series III Filter Connector Wall Mount Receptacle
with Crimp Removable Socket Contacts

Filter Connector Product Code

MIL-DTL-38999 Series III

Insert Arrangement
IAW MIL-STD-1560

Contact Gender
P - Pin
S - Socket

Filter Type
P - Pi Circuit
C - C Circuit

Capacitance
(See Table II)

Alternate Key Position
Per MIL-DTL-38999
A, B, C, D, E, N = Normal

240	-	383	R	P	15-35	P	C	P	A	C	N

Shell Style
R - Crimp Removable Wall Mount

Connector Class
(See Table I)

Termination
C - Crimp

Flange Mounting Style
H - Round Holes, Chamfered
C - Clinch Nuts (4-40 UNC)
M - Metric Clinch Nuts (M3)

NOTE: Crimp removable socket contacts to conform to MIL-C-39029/57-358, Size 16, MIL-C-39029/57-357 Size 20, and MIL-C-39029/57-354 Size 22D (Supplied loose).

Clinch Nuts and Metric Clinch Nuts Not Available for Composites

***R** - Wall Mount with Crimp Removable Socket Contacts*

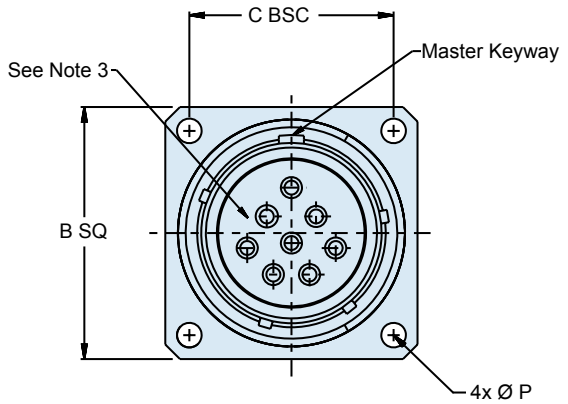

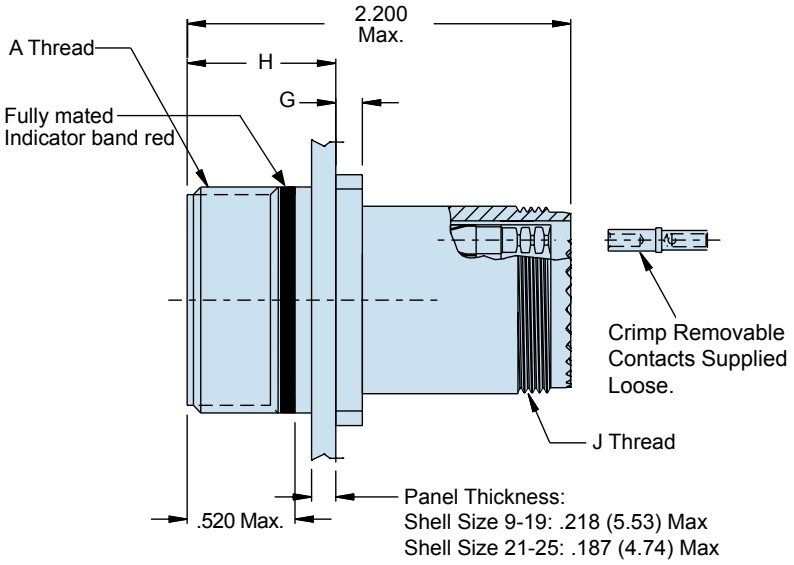

© 2010 Glenair, Inc. CAGE CODE 06324 Printed in U.S.A.

240-383R
MIL-DTL-38999 Series III Filter Connector
Wall Mount Receptacle
with Crimp Removable Socket Contacts

Glenair®

Panel Cutout Dimensions			
Shell Size	ø L Min	M Holes	N BSC
09	.516 (13.1)	.133 (3.4) .123 (3.1)	.719 (18.3)
11	.625 (15.9)	.133 (3.4) .123 (3.1)	.812 (20.6)
13	.750 (19.1)	.133 (3.4) .123 (3.1)	.906 (23.0)
15	.906 (23.0)	.133 (3.4) .123 (3.1)	.969 (24.6)
17	1.016 (25.8)	.133 (3.4) .123 (3.1)	1.062 (27.0)
19	1.141 (29.0)	.133 (3.4) .123 (3.1)	1.156 (29.4)
21	1.266 (32.2)	.133 (3.4) .123 (3.1)	1.250 (31.8)
23	1.375 (34.9)	.159 (4.0) .149 (3.8)	1.375 (34.9)
25	1.484 (37.7)	.155 (3.9) .145 (3.7)	1.500 (38.1)

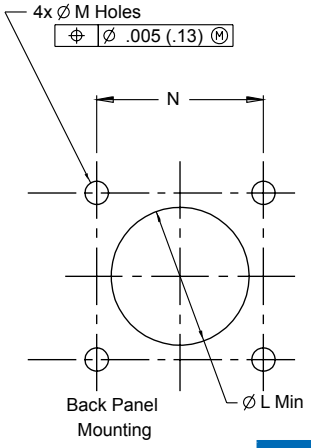

Consult Factory for Additional Filter Types, TVS Diodes, and other Custom Configurations.

TABLE I: CONNECTOR CLASS			
SYM	CLASS	MATERIAL	FINISH DESCRIPTION
M	Environmental	Aluminum	Electroless Nickel
MT	Environmental	Aluminum	Nickel Fluorocarbon Polymer (Ni-PTFE)
NF	Environmental	Aluminum	Cad. O.D. Over Electroless Nickel
P	Environmental	Stainless	Electro-Deposited Nickel
XM	Environmental	Composite	Electroless Nickel
XMT	Environmental	Composite	Nickel Fluorocarbon Polymer (Ni-PTFE)
XW	Environmental	Composite	Cad. O.D. Over Electroless Nickel
ZN	Environmental	Aluminum	Zinc-Nickel Over Electroless Nickel
H2*	Hermetic	Stainless	Electroless Nickel

* Some dimensions do not apply, see sales drawing 240-383JH2

TABLE II: CAPACITOR ARRAY CODE CAPACITANCE RANGE		
CLASS	PI - CIRCUIT (pF)	C - CIRCUIT (pF)
X*	160,000 - 240,000	80,000 - 120,000
Y*	80,000 - 120,000	40,000 - 60,000
Z*	60,000 - 90,000	30,000 - 45,000
A	38,000 - 56,000	19,000 - 28,000
B	32,000 - 45,000	16,000 - 22,500
C	18,000 - 33,000	9,000 - 16,500
D	8,000 - 12,000	4,000 - 6,000
E	3,300 - 5,000	1,650 - 2,500
F	800 - 1,300	400 - 650
G	400 - 600	200 - 300

* Reduced DWV – Please consult factory.

WALL MOUNT WITH CRIMP CONTACTS											
SHELL SIZE CODE	SHELL SIZE	A THREAD	B SQ	C BSC	D BSC	E	F	G	H	J THREAD	PØ ± .010
A	09	.6250- .1P- .3L-TS-2A	0.949 (24.1) 0.925 (23.5)	.719 (18.3)	.594 (15.1)	.136 (3.5) .120 (3.0)	.224 (5.7) .208 (5.3)	.143 (3.6) .083 (2.1)	.820 (20.8) .771 (19.6)	M12 X 1.0-6g 0.100R	.128 (3.3)
B	11	.7500- .1P- .3L-TS-2A	1.043 (26.5) 1.019 (25.9)	.812 (20.6)	.719 (18.3)	.136 (3.5) .120 (3.0)	.202 (5.1) .186 (4.7)		.820 (20.8) .771 (19.6)	M15 X 1.0-6g 0.100R	
C	13	.8750- .1P- .3L-TS-2A	1.138 (28.9) 1.114 (28.3)	.906 (23.0)	.812 (20.6)	.136 (3.5) .120 (3.0)	.202 (5.1) .186 (4.7)		.820 (20.8) .771 (19.6)	M18 X 1.0-6g 0.100R	
D	15	1.000- .1P- .3L-TS-2A	1.232 (31.3) 1.208 (30.7)	.969 (24.6)	.906 (23.0)	.136 (3.5) .120 (3.0)	.202 (5.1) .186 (4.7)		.820 (20.8) .771 (19.6)	M22 X 1.0-6g 0.100R	
E	17	1.1875- .1P- .3L-TS-2A	1.323 (33.6) 1.299 (33.0)	1.062 (27.0)	.969 (24.6)	.136 (3.5) .120 (3.0)	.202 (5.1) .186 (4.7)		.820 (20.8) .771 (19.6)	M25 X 1.0-6g 0.100R	
F	19	1.2500- .1P- .3L-TS-2A	1.449 (36.8) 1.425 (36.2)	1.156 (29.4)	1.062 (27.0)	.136 (3.5) .120 (3.0)	.202 (5.1) .186 (4.7)		.820 (20.8) .771 (19.6)	M28 X 1.0-6g 0.100R	
G	21	1.3750- .1P- .3L-TS-2A	1.575 (40.0) 1.551 (39.4)	1.250 (31.8)	1.156 (29.4)	.136 (3.5) .120 (3.0)	.202 (5.1) .186 (4.7)	.171 (4.3) .083 (2.1)	.790 (20.1) .741 (18.8)	M31 X 1.0-6g 0.100R	
H	23	1.5000- .1P- .3L-TS-2A	1.701 (43.2) 1.677 (42.6)	1.375 (34.9)	1.250 (31.8)	.162 (4.1) .146 (3.7)	.250 (6.4) .083 (2.1)		.790 (20.1) .741 (18.8)	M34 X 1.0-6g 0.100R	.156 (4.0)
J	25	1.6250- .1P- .3L-TS-2A	1.823 (46.3) 1.799 (45.7)	1.500 (38.1)	1.375 (34.9)	.162 (4.1) .146 (3.7)	.250 (6.4) .083 (2.1)		.790 (20.1) .741 (18.8)	M37 X 1.0-6g 0.100R	

© 2010 Glenair, Inc. CAGE CODE 06324 Printed in U.S.A.

240-383A
MIL-DTL-38999 Series III Filter Connector
Connector Adapter

Filter Connector Product Code

MIL-DTL-38999 Series III

Insert Arrangement
IAW MIL-STD-1560

Contact Gender
PS *- Pins, Plug Side*
SP *- Sockets, Plug Side*

Flange Mounting Style
N *- Not Applicable*

Alternate Key Position
Per MIL-DTL-38999
A, B, C, D, E, N = Normal
U = Universal

240	-	383	A	M	15-35	PS	P	A	N	N

Shell Style
A *- Connector Adapter*

Connector Class
(See Table I)

Filter Type
P *- Pi Circuit*
C *- C Circuit*

Capacitance
(See Table II)

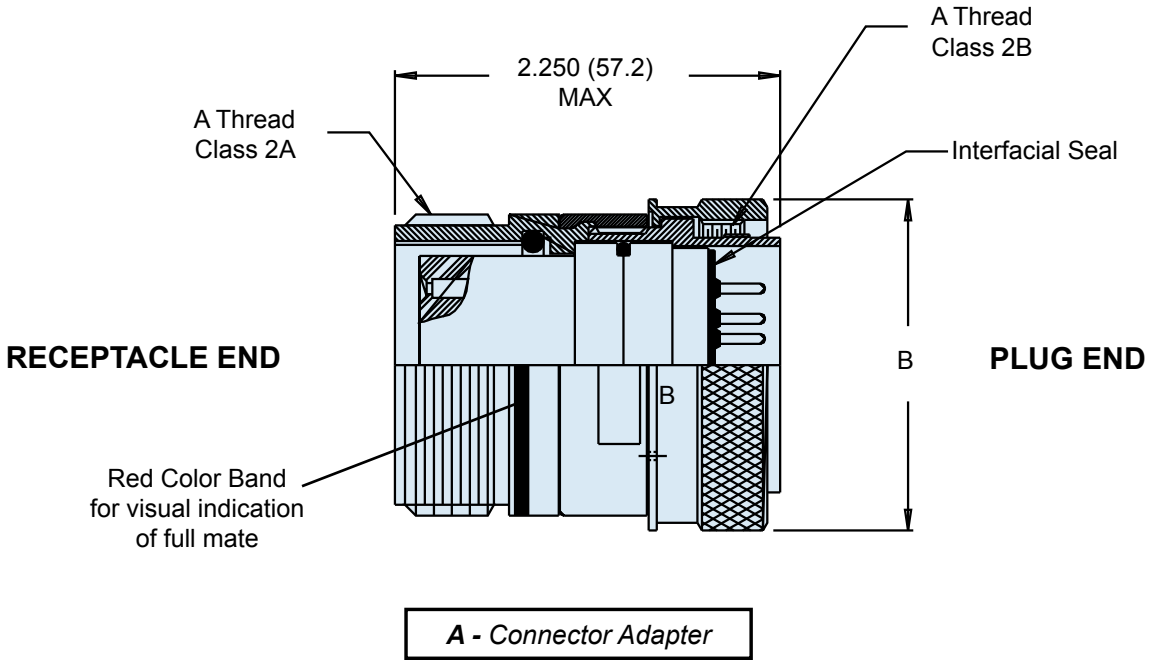

A *- Connector Adapter*

* Please consult factory for Pin/Pin and/or Socket/Socket contact arrangements.

© 2010 Glenair, Inc.

GLENAIR, INC. • 1211 AIR WAY • GLENDALE, CA 91201-2497 • 818-247-6000 • FAX 818-500-9912
www.glenair.com
E-Mail: sales@glenair.com

240-383A
MIL-DTL-38999 Series III Filter Connector
Connector Adapter

TABLE I: CONNECTOR CLASS			
SYM	CLASS	MATERIAL	FINISH DESCRIPTION
M	Environmental	Aluminum	Electroless Nickel
MT	Environmental	Aluminum	Nickel Fluorocarbon Polymer (Ni-PTFE)
NF	Environmental	Aluminum	Cad. O.D. Over Electroless Nickel
P	Environmental	Stainless	Electro-Deposited Nickel
ZN	Environmental	Aluminum	Zinc-Nickel Over Electroless Nickel
H2*	Hermetic	Stainless	Electroless Nickel

* Some dimensions do not apply, see sales drawing 240-383JH2

Consult Factory for Additional Filter Types, TVS Diodes, and other Custom Configurations.

TABLE II: CAPACITOR ARRAY CODE CAPACITANCE RANGE		
CLASS	PI - CIRCUIT (pF)	C - CIRCUIT (pF)
X*	160,000 - 240,000	80,000 - 120,000
Y*	80,000 - 120,000	40,000 - 60,000
Z*	60,000 - 90,000	30,000 - 45,000
A	38,000 - 56,000	19,000 - 28,000
B	32,000 - 45,000	16,000 - 22,500
C	18,000 - 33,000	9,000 - 16,500
D	8,000 - 12,000	4,000 - 6,000
E	3,300 - 5,000	1,650 - 2,500
F	800 - 1,300	400 - 650
G	400 - 600	200 - 300

* Reduced DWV – Please consult factory.

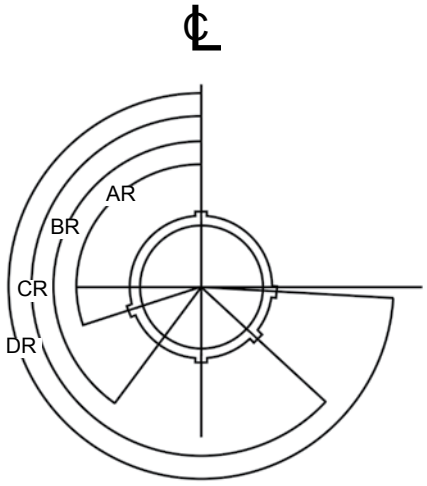

FACE VIEW
RECEPTACLE

DIMENSIONS			
SHELL SIZE CODE	SHELL SIZE	A THREAD CLASS 2	B DIA. MAX
A-1	09	.6250- .1P- .3L-TS-2A	.858 (21.8)
B-1	11	.7500- .1P- .3L-TS-2A	.984 (25.0)
C-1	13	.8750- .1P- .3L-TS-2A	1.157 (29.4)
D-1	15	1.000- .1P- .3L-TS-2A	1.280 (32.5)
E-1	17	1.1875- .1P- .3L-TS-2A	1.406 (35.7)
F-1	19	1.2500- .1P- .3L-TS-2A	1.516 (38.5)
G-1	21	1.3750- .1P- .3L-TS-2A	1.642 (41.7)
H-1	23	1.5000- .1P- .3L-TS-2A	1.768 (44.9)
J-1	25	1.6250- .1P- .3L-TS-2A	1.890 (48.0)

© 2010 Glenair, Inc. CAGE CODE 06324 Printed in U.S.A.

Glenair MIL-DTL-38999 Series IV Type Filter Connector with Breech-Lock Coupling

Master How to Order • Part Number Breakdown

240 384 J P 15-35 P S P A C N

Filter Connector Product Code

MIL-DTL-38999 Series IV

Connector Class (See Table I)

Insert Arrangement
Per MIL-STD-1560

Termination
S *- Solder Cup*
P *- PC Tail*

Capacitance (See Table II)

Alternate Key Position
Per MIL-DTL-38999
A, B, C, D, K, L, M, R, U,
N = Normal

Shell Style
J *- Jam Nut*
W *- Wall Mount*

Contact Gender
P *- Pin*
S *- Socket*

Filter Type
P *- Pi Circuit*
C *- C Circuit*

Flange Mounting Style
N *- Not Applicable/Mfgs. Option*
H *- Round Holes, Chamfered*
C *- Clinch Nuts (4-40 UNC)*
M *- Metric Clinch Nuts (M3)*

Consult Factory for Additional Filter Types, TVS Diodes, and other Custom Filter Connector Configurations.

TABLE I: CONNECTOR CLASS

SYM	CLASS	MATERIAL	FINISH DESCRIPTION
M	Environmental	Aluminum	Electroless Nickel
MT	Environmental	Aluminum	Nickel Fluorocarbon Polymer (Ni-PTFE)
NF	Environmental	Aluminum	Cadmium O.D. Over Electroless Nickel
P	Environmental	Stainless Steel	Electro-Deposited Nickel
ZN	Environmental	Aluminum	Zinc-Nickel Over Electroless Nickel
H2	Hermetic	Stainless Steel	Electroless Nickel

© 2010 Glenair, Inc.

GLENAIR, INC. • 1211 AIR WAY • GLENDALE, CA 91201-2497 • 818-247-6000 • FAX 818-500-9912
www.glenair.com E-Mail: sales@glenair.com

TABLE II: CAPACITOR ARRAY CODE CAPACITANCE RANGE		
CLASS	PI - CIRCUIT (pF)	C - CIRCUIT (pF)
X*	160,000 - 240,000	80,000 - 120,000
Y*	80,000 - 120,000	40,000 - 60,000
Z*	60,000 - 90,000	30,000 - 45,000
A	38,000 - 56,000	19,000 - 28,000
B	32,000 - 45,000	16,000 - 22,500
C	18,000 - 33,000	9,000 - 16,500
D	8,000 - 12,000	4,000 - 6,000
E	3,300 - 5,000	1,650 - 2,500
F	800 - 1,300	400 - 650
G	400 - 600	200 - 300

* Reduced DWV – Please consult factory.

APPLICATION NOTES

1. Materials/Finishes: Shells, Barrel, Coupling Nut, Jam Nut - See Table I
   Insulators - high grade rigid dielectric/N.A.
   Seals - Flourosilicone
   PC Tail & Solder Cup contacts: 50µ" Gold over 50µ" Nickel
2. Assembly to be identified with Glenair's name, part number, and date code - space permitting.
3. Insert Arrangement in accordance with MIL-STD-1560. (Arrangement shown for reference only)
4. EMI Circular Filter Receptacle connector designed to meet requirements of MIL-STD-2120 and MIL-DTL-38999, Series IV.
5. All contacts to have identical filter value. Other filter arrangements available, contact factory.
6. Electrical Ratings: DWV- 500 VDC; Standard Operating Voltage 200 Volts DC; Current Rating 5 Amps (size 22);
7. Insulation Resistance: 5000 MegOhms Min. at 200 VDC.
8. Operating Temperature -55°C to +125°C (Env Class Connectors)
9. Other filter styles (C-L, L-C, Unbalanced PI, Multi-Stage, Multi-Value) are available, please consult the factory.
10. Metric Dimensions (mm) are indicated in parentheses.

© 2010 Glenair, Inc.

GLENAIR, INC. • 1211 AIR WAY • GLENDALE, CA 91201-2497 • 818-247-6000 • FAX 818-500-9912
www.glenair.com E-Mail: sales@glenair.com

240-384J
MIL-DTL-38999 Series IV Filter Connector
Jam Nut Receptacle

Filter Connector Product Code

MIL-DTL-38999 Series IV

Insert Arrangement
IAW MIL-STD-1560

Contact Gender
P - Pin
S - Socket

Filter Type
P - Pi Circuit
C - C Circuit

Capacitance
(See Table II)

Alternate Key Position
Per MIL-DTL-38999
A, B, C, D, K, L, M, R, U
N = Normal

240	-	384	J	P	15-35	P	P	P	A	N	N

Shell Style
J - Jam Nut

Connector Class
(See Table I)

Termination
P - PC Tail

Flange Mounting Style
N - Not Applicable

J - Jam Nut

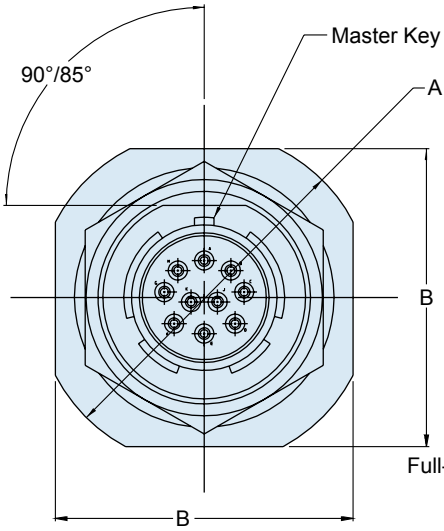

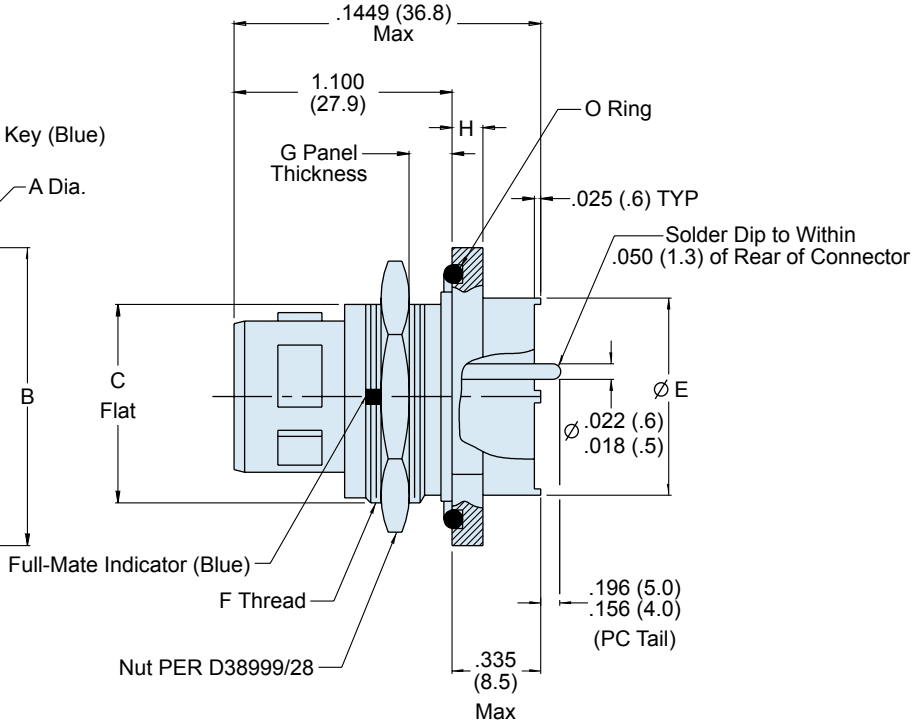

© 2010 Glenair, Inc.

GLENAIR, INC. • 1211 AIR WAY • GLENDALE, CA 91201-2497 • 818-247-6000 • FAX 818-500-9912
www.glenair.com
E-Mail: sales@glenair.com

240-384J
MIL-DTL-38999 Series IV Filter Connector
Jam Nut Receptacle

TABLE I: CONNECTOR CLASS

SYM	CLASS	MATERIAL	FINISH DESCRIPTION
M	Environmental	Aluminum	Electroless Nickel
MT	Environmental	Aluminum	Nickel Fluorocarbon Polymer (Ni-PTFE)
NF	Environmental	Aluminum	Cadmium O.D. Over Electroless Nickel
P	Environmental	Stainless Steel	Electro-Deposited Nickel
ZN	Environmental	Aluminum	Zinc-Nickel Over Electroless Nickel
H2	Hermetic	Stainless Steel	Electroless Nickel

TABLE II: CAPACITOR ARRAY CODE CAPACITANCE RANGE

CLASS	PI - CIRCUIT (pF)	C - CIRCUIT (pF)
X*	160,000 - 240,000	80,000 - 120,000
Y*	80,000 - 120,000	40,000 - 60,000
Z*	60,000 - 90,000	30,000 - 45,000
A	38,000 - 56,000	19,000 - 28,000
B	32,000 - 45,000	16,000 - 22,500
C	18,000 - 33,000	9,000 - 16,500
D	8,000 - 12,000	4,000 - 6,000
E	3,300 - 5,000	1,650 - 2,500
F	800 - 1,300	400 - 650
G	400 - 600	200 - 300

* Reduced DWV – Please consult factory.

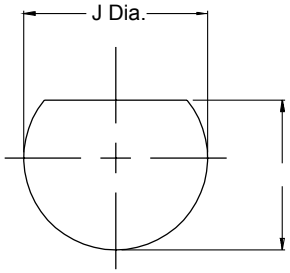

Recomended Panel Cut-Out

TABLE III: DIMENSIONS

SHELL SIZE CODE	SHELL SIZE	A Diameter	B	C FLAT	E DIAMETER	F THREAD ISO METRIC	G	H	J Diameter	K
B	11	1.385 (35.2) 1.362 (34.6)	1.267 (32.2) 1.232 (31.3)	.754 (19.2) .745 (18.9)	.779 (19.8) .759 (19.3)	M20 X 1.0-6g	.125 (3.2) .059 (1.5)	.118 (3.0) .094 (2.4)	.832 (21.1) .822 (20.9)	.769 (19.5) .759 (19.3)
C	13	1.511 (38.4) 1.488 (37.8)	1.393 (35.4) 1.358 (34.5)	.941 (23.9) .932 (23.7)	.909 (23.1) .889 (22.6)	M25 X 1.0-6g	.125 (3.2) .059 (1.5)	.118 (3.0) .094 (2.4)	1.017 (25.8) 1.007 (25.6)	.955 (24.3) .945 (24.0)
D	15	1.637 (41.6) 1.614 (41.0)	1.519 (38.6) 1.484 (37.7)	1.065 (27.1) 1.056 (26.8)	1.035 (26.3) 1.015 (25.8)	M28 X 1.0-6g	.125 (3.2) .059 (1.5)	.118 (3.0) .094 (2.4)	1.144 (29.1) 1.134 (28.8)	1.084 (27.5) 1.074 (27.3)
E	17	1.763 (44.8) 1.740 (44.2)	1.641 (41.7) 1.606 (40.8)	1.190 (30.2) 1.181 (30.0)	1.157 (29.4) 1.137 (28.9)	M32 X 1.0-6g	.125 (3.2) .059 (1.5)	.118 (3.0) .094 (2.4)	1.271 (32.3) 1.261 (32.0)	1.208 (30.7) 1.198 (30.4)
F	19	1.948 (49.5) 1.925 (48.9)	1.830 (46.5) 1.795 (45.6)	1.316 (33.4) 1.306 (33.2)	1.283 (32.6) 1.263 (32.1)	M35 X 1.0-6g	.125 (3.2) .059 (1.5)	.149 (3.8) .125 (3.2)	1.394 (35.4) 1.384 (35.2)	1.333 (33.9) 1.323 (33.6)
G	21	2.074 (52.7) 2.051 (52.1)	1.956 (49.7) 1.921 (48.8)	1.441 (36.6) 1.431 (36.3)	1.409 (35.8) 1.389 (35.3)	M38 X 1.0-6g	.125 (3.2) .059 (1.5)	.149 (3.8) .125 (3.2)	1.517 (38.5) 1.507 (38.3)	1.459 (37.1) 1.449 (36.8)
H	23	2.200 (55.9) 2.177 (55.3)	2.078 (52.8) 2.043 (51.9)	1.565 (39.8) 1.556 (39.5)	1.535 (39.0) 1.515 (38.5)	M41 X 1.0-6g	.125 (3.2) .059 (1.5)	.149 (3.8) .125 (3.2)	1.644 (41.8) 1.634 (41.5)	1.580 (40.1) 1.570 (39.9)
J	25	2.326 (59.1) 2.299 (58.4)	2.204 (56.0) 2.169 (55.1)	1.692 (43.0) 1.681 (42.7)	1.657 (42.1) 1.637 (41.6)	M44 X 1.0-6g	.125 (3.2) .059 (1.5)	.149 (3.8) .125 (3.2)	1.769 (44.9) 1.759 (44.7)	1.709 (43.4) 1.699 (43.2)

© 2010 Glenair, Inc.

GLENAIR, INC. • 1211 AIR WAY • GLENDALE, CA 91201-2497 • 818-247-6000 • FAX 818-500-9912
www.glenair.com E-Mail: sales@glenair.com

240-384W
MIL-DTL-38999 Series IV Filter Connector
Wall Mount Receptacle

240 - 384 W M 10-35 P S P C N N

- **Filter Connector Product Code** (240)
- **MIL-DTL-38999 Series IV** (384)
- **Shell Style** — *W - Wall Mount* (W)
- **Connector Class** — *(See Table III)* (M)
- **Insert Arrangement** — *IAW MIL-STD-1560* (10-35)
- **Contact Gender** — *P - Pin*, *S - Socket* (P)
- **Termination** — *P - PC Tail*, *S - Solder Cup* (S)
- **Filter Type** — *(See Table IV)* (P)
- **Capacitance** — *(See Table II)* (C)
- **Flange Mounting Style** (N)
  - *N - Not Applicable/Mfgs. Option*
  - *H - Round Holes, Chamfered*
  - *C - Clinch Nuts (4-40 UNC)*
  - *M - Metric Clinch Nuts (M3)*
- **Alternate Key Position** (N)
  - Per MIL-DTL-38999
  - *A, B, C, D, K, L, M, R, U*
  - *N = Normal*

***W** - Wall Mount*

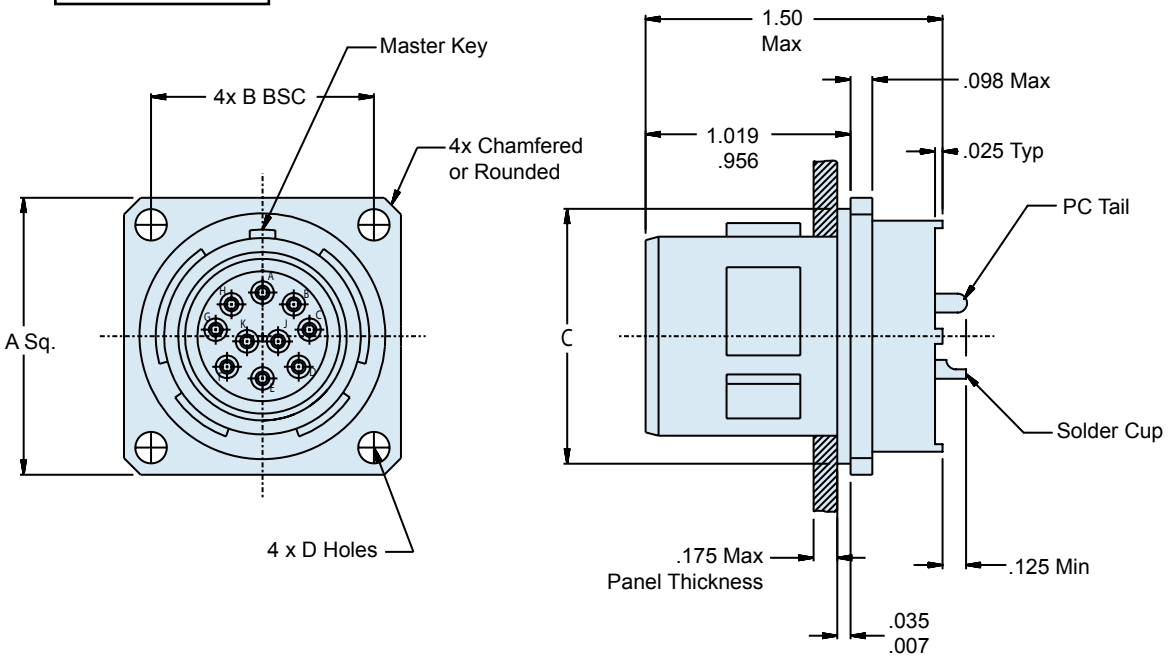

© 2010 Glenair, Inc.

GLENAIR, INC. • 1211 AIR WAY • GLENDALE, CA 91201-2497 • 818-247-6000 • FAX 818-500-9912
www.glenair.com E-Mail: sales@glenair.com

240-384W
MIL-DTL-38999 Series IV Filter Connector
Wall Mount Receptacle

Glenair®

TABLE I: CONNECTOR CLASS

SYM	CLASS	MATERIAL	FINISH DESCRIPTION
M	Environmental	Aluminum	Electroless Nickel
MT	Environmental	Aluminum	Nickel Fluorocarbon Polymer (Ni-PTFE)
NF	Environmental	Aluminum	Cadmium O.D. Over Electroless Nickel
P	Environmental	Stainless Steel	Electro-Deposited Nickel
ZN	Environmental	Aluminum	Zinc-Nickel Over Electroless Nickel
H2	Hermetic	Stainless Steel	Electroless Nickel

TABLE IV

SYM	Filter Type
P	PI Circuit
C	C Circuit

TABLE II: CAPACITOR ARRAY CODE CAPACITANCE RANGE

CLASS	PI - CIRCUIT (pF)	C - CIRCUIT (pF)
X*	160,000 - 240,000	80,000 - 120,000
Y*	80,000 - 120,000	40,000 - 60,000
Z*	60,000 - 90,000	30,000 - 45,000
A	38,000 - 56,000	19,000 - 28,000
B	32,000 - 45,000	16,000 - 22,500
C	18,000 - 33,000	9,000 - 16,500
D	8,000 - 12,000	4,000 - 6,000
E	3,300 - 5,000	1,650 - 2,500
F	800 - 1,300	400 - 650
G	400 - 600	200 - 300

* Reduced DWV – Please consult factory.

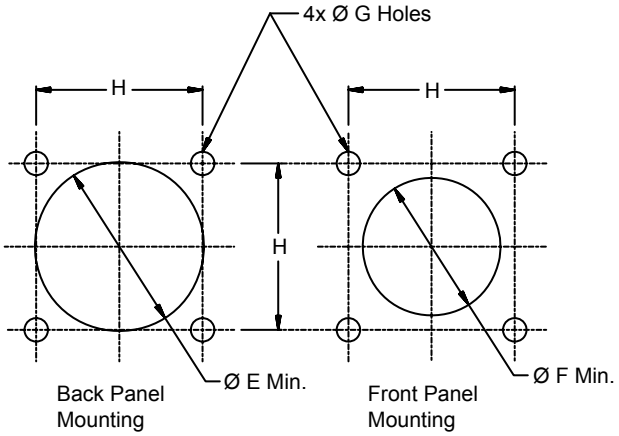

TABLE III

SHELL SIZE CODE	SHELL SIZE	A Sq	B BSC	C Diameter	D Diameter	Ø E Min.	Ø F Min.	Ø G Holes	H
B	11	1.051 1.008	.812	.793 .778	.138 .122	.781	.625	.133 .123	.817 .807
C	13	1.145 1.102	.906	.919 .904	.138 .122	.921	.750	.133 .123	.911 .901
D	15	1.240 1.197	.969	1.044 1.029	.138 .122	1.047	.906	.133 .123	.973 .963
E	17	1.334 1.291	1.062	1.170 1.155	.138 .122	1.218	1.016	.133 .123	1.067 1.057
F	19	1.460 1.417	1.156	1.294 1.279	.138 .122	1.296	1.142	.133 .123	1.161 1.151
G	21	1.583 1.539	1.250	1.419 1.404	.138 .122	1.421	1.266	.133 .123	1.255 1.245
H	23	1.709 1.665	1.375	1.544 1.529	.157 .142	1.546	1.375	.159 .149	1.380 1.370
J	25	1.835 1.791	1.500	1.670 1.654	.157 .142	1.672	1.484	.159 .149	1.505 1.495

© 2010 Glenair, Inc. CAGE CODE 06324 Printed in U.S.A.

Glenair MIL-DTL-38999
Environmental Class Connectors

SECTION D TABLE OF CONTENTS

GLENAIR ENVIRONMENTAL CLASS CLASS CONNECTORS:

MIL-DTL-38999 Type Environmental Class Connector Product Features.....D-1

Insert Arrangements IAW MIL-STD-1560.....D-2

MIL-DTL-38999 Material Specifications.....D-5

MIL-DTL-38999 Crimp Tools and Accessories.....D-6

MIL-DTL-38999 Pin Contact Selection Guide.....D-8

MIL-DTL-38999 Socket Contact Selection Guide.....D-9

MIL-DTL-38999 Series III Type Wall Mount Environmental Class Receptacle.....D-11

MIL-DTL-38999 Series III Type Jam Nut Environmental Class Receptacle.....D-14

MIL-DTL-38999 Series III Type In-Line Environmental Class Receptacle.....D-16

MIL-DTL-38999 Series III Type Environmental Class Plug.....D-18

MIL-DTL-38999 Series III Type Box Mount Quadrax Connector.....D-20

MIL-DTL-38999 Series III Type Plug and Wall Mount Quadrax Connector.....D-22

MIL-DTL-38999 Series III Type Quadrax Socket Contact.....D-24

MIL-DTL-38999 Series I Type Shorting Plug.....D-25

MIL-DTL-38999 Series I Type Jam Nut Shorting Receptacle.....D-26

MIL-DTL-38999 Series I Type Shorting Bulkhead Feed-Thru Bulkhead.....D-28

MIL-DTL-38999 Series II Type Shorting Plug.....D-29

MIL-DTL-38999 Series III Type Quick Disconnect Plug with Swivel Lanyard.....D-30

MIL-DTL-38999 Type 4 Lanyard Release Plug for MIL-STD-1760.....D-32

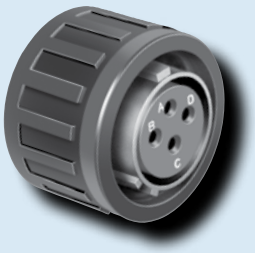

Environmental Class MIL-DTL-38999 Type Connectors Built for a Broad Range of Harsh-Environment Applications

Product Applications

Glenair is recognized as trusted supplier of harsh environment electrical connectors built to the MIL-DTL-38999 standard. This section of the catalog presents a selection of the environmental class MIL-DTL-38999 type solutions produced by Glenair Glenair's expertise in these harsh-environmental interconnect products extends to lanyard release quick-disconnect products, shorting plugs and receptacles, composite and specialty metal plugs and receptacles as well as unique coax and quadrax configurations. We can also supply the interconnects in turnkey harsh application cable sets.

Available Insert Arrangements

Based on industry-standard specifications, Glenair's MIL-DTL-38999 derivative environmental class connector systems are supplied with insert arrangements IAW MIL-STD-1560, or appropriate sub-sets depending on connector series. Consult factory for available insert arrangements.

Errata

Catalog contents—including part numbers, materials and dimensions—are accurate to the best of our ability when we go to print. When errors or mistakes are brought to our attention, corrected content is posted immediately to www.glenair.com.

Same-Day Delivery on Many Common Shell Styles and Layouts

Selected Range of D38999 Series I thru III Pin and Socket Insert Arrangements–Consult Factory for Availability

Lightweight, Corrosion-Free Composite Versions

Special Lanyard-Release Versions

All Standard Material Options, Including Stainless Steel

Jam Nut, Solder Mount, Wall Mount and Box Mount Options

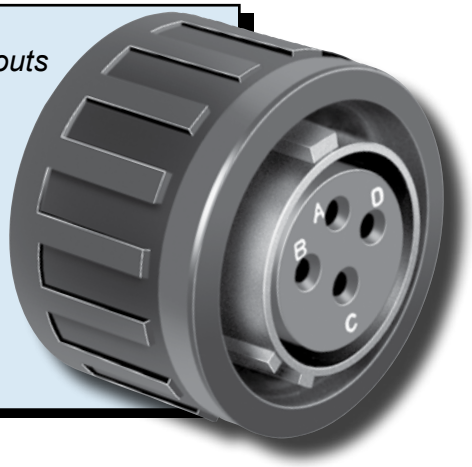

© 2010 Glenair, Inc.

GLENAIR, INC. • 1211 AIR WAY • GLENDALE, CA 91201-2497 • 818-247-6000 • FAX 818-500-9912
www.glenair.com
E-Mail: sales@glenair.com

MIL-DTL-38999 Series I, II and III Type Environmental Class Connectors Insert Arrangements (IAW MIL-STD-1560)

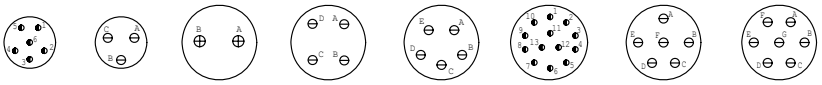

Series I	9-35	9-98	11-2	11-4	11-5	11-35	11-98	11-99
Series II	8-35	8-98	10-2	10-4	10-5	10-35	10-98	10-99
Series III	A35	A98	B2	B4	B5	B35	B98	B99
Series IV	---	---	---	---	B5	B35	B98	B99

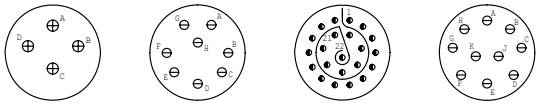

Series I	13-4	13-8	13-35	13-98
Series II	12-4	12-8	12-35	12-98
Series III	C4	C8	C35	C98
Series IV	C4	---	C35	C98

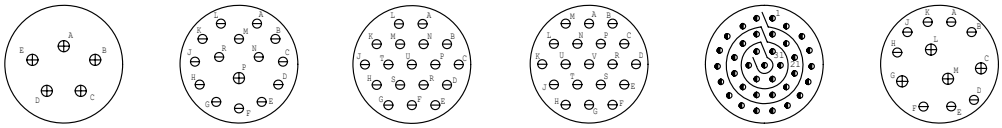

Series I	15-5	15-15	15-18	15-19	15-35	15-97
Series II	14-5	14-15	14-18	14-19	14-35	14-97
Series III	D5	D15	D18	D19	D35	D97
Series IV	D5	---	D18	D19	D35	D97

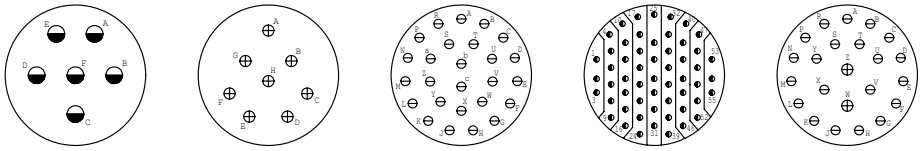

Series I	17-6	17-8	17-26	17-35	17-99
Series II	16-6	16-8	16-26	16-35	16-99
Series III	E6	E8	E26	E35	E99
Series IV	E6	E8	E26	E35	---

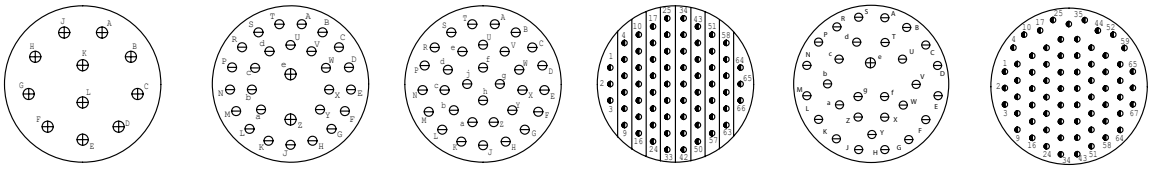

Series I	19-11	19-28	19-32	19-35	19-30	19-45
Series II	18-11	18-28	18-32	18-35	18-30	18-45
Series III	F11	F28	F32	F35	F30	F45
Series IV	F11	---	F32	F35	---	---

Consult factory for available insert arrangements.

© 2010 Glenair, Inc.

MIL-DTL-38999 Series I, II and III Type Environmental Class Connectors Insert Arrangements (IAW MIL-STD-1560)

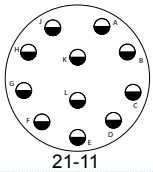
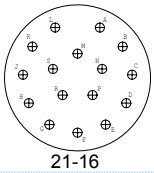
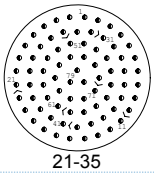
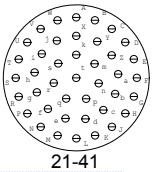

Series I	21-11	21-16	21-35	21-41
Series II	20-11	20-16	20-35	20-41
Series III, IV	G11, G11	G16, G16	G35, G35	G41, G41

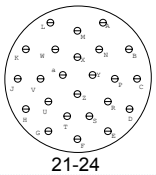
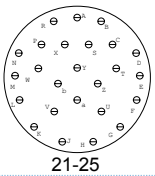
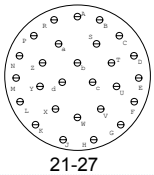
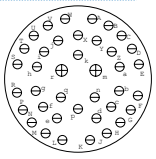

Series I	21-24	21-25	21-27	21-39
Series II	20-24	20-25	20-27	20-39
Series III, IV	G24, G24	G25, ---	G27, ---	G39, ---

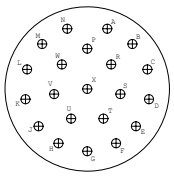
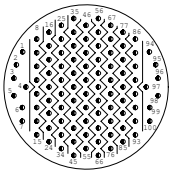
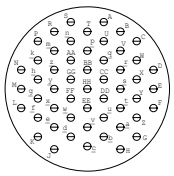
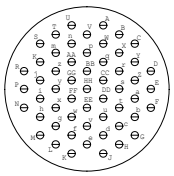
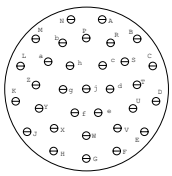

Series I	23-21	23-35	23-53	23-55	23-32
Series II	22-21	22-35	22-53	22-55	22-32
Series III, IV	H21, H21	H35, H35	H53, ---	H55, H55	H32, ---

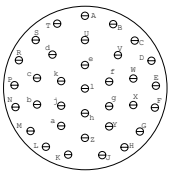
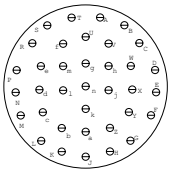
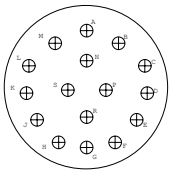
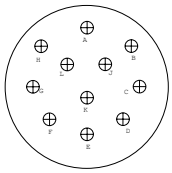

Series I	23-34	23-36	23-97	23-99
Series II	22-34	22-36	22-97	22-99
Series III, IV	H34, ---	H36, ---	H97, ---	H99, ---

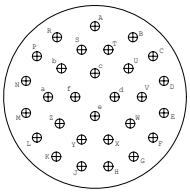
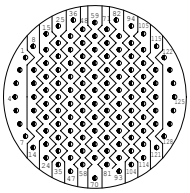
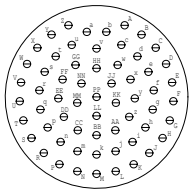
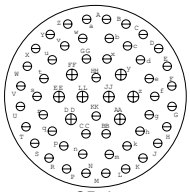

Series I	25-29	25-35	25-61	25-4
Series II	24-29	24-35	24-61	24-4
Series III, IV	J29, J29	J35, J35	J61, J61	J4, J4

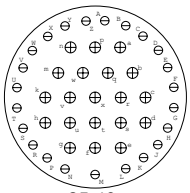
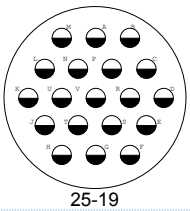
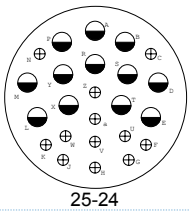
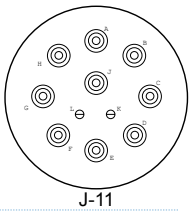

Series I	25-43	25-19	25-24	J-11
Series II	24-43	24-19	24-24	*(Series IV Only)*
Series III, IV	J43, J43	J19, J19	J24, J24	

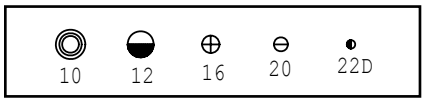

© 2010 Glenair, Inc.

GLENAIR, INC. • 1211 AIR WAY • GLENDALE, CA 91201-2497 • 818-247-6000 • FAX 818-500-9912
www.glenair.com
E-Mail: sales@glenair.com

Glenair®

MIL-DTL-38999 Series I, II and III Type Environmental Class Connectors Insert Arrangements (IAW MIL-STD-1560)

Shell Size and Insert Arrangements			Number of Pins			
MS Series I	MS Series II	D38999 Series III	22D	20	16	12
9-35	8-35	A35	6			
9-98	8-98	A98		3		
11-2	10-2	B2			2	
11-4	10-4	B4		4		
11-5	10-5	B5		5		
11-35	10-35	B35	13			
11-98	10-98	B98		6		
11-99	10-99	B99		7		
13-4	12-4	C4			4	
13-8	12-8	C8		8		
13-35	12-35	C35	22			
13-98	12-98	C98		10		
15-5	14-5	D5			5	
15-15	14-15	D15		14	1	
15-18	14-18	D18		18		
15-19	14-19	D19		19		
15-35	14-35	D35	37			
15-97	14-97	D97		8	4	
17-6	16-6	E6				6
17-8	16-8	E8			8	
17-26	16-26	E26		26		
17-35	16-35	E35	55			
17-99	16-99	E99		21	2	
19-11	18-11	F11			11	
19-28	18-28	F28		26	2	
19-30	18-30	F30		29	1	
19-32	18-32	F32		32		
19-35	18-35	F35	66			
19-45	18-45	F45	67			
21-11	20-11	G11				11
21-16	20-16	G16			16	
21-24	20-24	G24		24		
21-25	20-25	G25		25		
21-27	20-27	G27		27		
21-35	20-35	G35	79			
21-39	20-39	G39		37	2	
21-41	20-41	G41		41		
23-21	22-21	H21			21	
23-32	22-32	H32		32		
23-34	22-34	H34		34		
23-35	22-35	H35	100			
23-36	22-36	H36		36		
23-53	22-53	H53		53		
23-55	22-55	H55		55		
23-97	22-97	H97			16	
23-99	22-99	H99			11	
25-4	24-4	J4		48	8	
25-19	24-19	J19				19
25-24	24-24	J24			12	12
25-29	24-29	J29			29	
25-35	24-35	J35	128			
25-43	24-43	J43		23	20	
25-61	24-61	J61		61		

Shell Size / Insert Arrangements	Number of Pins				
D38999 Series IV	22D	20	16	12	10
B5		5			
B35	13				
B98		6			
B99		7			
C4			4		
C35	22				
C98		10			
D5			5		
D18		18			
D19	37	19			
D35					
D97		8	4		
E6				6	
E8			8		
E26		26			
E35	55				
F11			11		
F32		32			
F35	66				
G11				11	
G16			16		
G35	79				
G41		41			
H21			21		
H35	100				
H55		55			
J4		48	8		
J11		2			9
J19				19	
J24			12	12	
J29			29		
J35	128				
J43		23	20		
J61		61			

© 2010 Glenair, Inc. CAGE CODE 06324 Printed in U.S.A.

TABLE I: MATERIALS	
Shell, Barrel, and Coupling Nut	Aluminum alloy 6061 per ASTM-B211
Front and Rear Insulators	Glass-filled LCP in accordance with MIL-M-24519, Type GLP-30F
Contact Retention Clip	Beryllium copper, heat-treated, unplated
Grommet, Peripheral Seal and Interfacial Seal	Blended elastomer, 30% silicone per ZZ-R-765, 70% fluorosilicone per MIL-R-25988
Pin / Socket Contacts (Environmental)	Copper Alloy / Gold Plate
Socket Contact (Hermetic)	Copper Alloy, Gold Plated IAW ASTM B488, Type 3, Code C
Adhesives	Silicone and epoxy
Potting Compound: PCB and Solder Cup	High-strength epoxy, Hysol EE4215.

TABLE II: POPULAR ENVIRONMENTAL CLASS CONNECTOR FINISHES

Plating Code	Material	Finish	Specification
ME	Aluminum	Electroless Nickel	AMS-C-26074
B	Aluminum	Cad Plate, Olive Drab	AMS-QQ-P-416, Type II, Class 3
NF	Aluminum	Cadmium Plate Olive Drab over Electroless Nickel	AMS-QQ-P-416, over AMS-C-26074 (1000 Hour Salt Spray)
ZN	Aluminum	Olive Drab Zinc-Nickel	Zinc alloy per ASTM B841-91, Class 1 Type E Grade 3 over Electroless nickel per ASTM B733-90 SC2, Type 1 Class 5
MT	Aluminum	Ni-PTFE ***1,000 Hour Grey™*** (Nickel Fluorocarbon Polymer)	MIL-DTL-38999L (500 Hour Salt Spray)
XM	Composite	Electroless Nickel	AMS-C-26074
XMT	Composite	Ni-PTFE ***1,000 Hour Grey™*** (Nickel Fluorocarbon Polymer)	MIL-DTL-38999L (2000 Hour Salt Spray)
XW	Composite	Cadmium Olive Drab over Electroless Nickel	AMS-QQ-P-416, over AMS-C-26074 (1000 Hour Salt Spray)
Z1	Stainless Steel	Passivate	AMS-QQ-P-35
ZL	Stainless Steel	Electrodeposited Nickel	SAE-AMS-QQ-N-290, Class 2

© 2010 Glenair, Inc.

GLENAIR, INC. • 1211 AIR WAY • GLENDALE, CA 91201-2497 • 818-247-6000 • FAX 818-500-9912
www.glenair.com
E-Mail: sales@glenair.com

#8 Quadrax Contacts for Glenair Series 257-455 and 257-459 Connectors

Contact Size	Type	Glenair Part Number	Military Part Number	Tool Code	Cable Type Dash No.	Wire Size	Sample Contact
#8	Quadrax	854-001 854-002	N/A	C, J (Inner) K, M (Outer)	01 - Tensolite NF26Q100 02 - Tensolite NF24Q100 03 - Draka Fileca F 4704-6 04 - Draka Fileca F 4704-4	26AWG 24AWG 26AWG 24AWG	

Consult factory for PC tail/other cable options

Crimp Tool And Positioner For #12 and #16 Power Contacts

1 Crimp tool for use with size #16 and #12 power pins. 9.75 inches OAL, 1.25 pounds. Use with M39029/57 and /58 contacts and 809-093 adapters.

2 Positioner for use with size #12 and #16 Power contacts.

Figure	Military Part Number	Daniels Part Number	Tool Code
1	M22520/1-01	AF8	A
2	M22520/1-04	TH163	B

D

Miniature Adjustable Crimp Tool

These crimp tools perform precision eight indent crimps for gas-tight wire terminations and excellent tensile strength. Adjustment wheel has 8 settings. Ratchet mechanism prevents improper crimps. Use with bayonet-type positioners. Check calibration with M22520/3 gages. Length is 6.75 inches, weight is approx. 10 oz.

1 Standard M22520/2-01 miniature crimper. Use with standard size #20 and #22D contacts and with M39029/76, /77 and /78 coaxial center contacts. Requires positioner, ordered separately.

Glenair Part Number	Military Part Number	Daniels Part Number	Tool Code
809-015	M22520/2-01	AFM8	C

2 Positioner for M39029/76, 77 and 78 coaxial inner contact. Use with 809-015 crimp tool.

Coax/ Power	Contact Size	Military Part Number	Daniels Part Number	Notes	Tool Code
Power	#20	M22520/2-10	K43	Series I, II, III and IV	D
Power	#22D	M22520/2-09	K42	Series I, II, III and IV Pin	E
Power	#22D	M22520/2-07	K40	Series I, III and IV Socket	F
Power	#22D	M22520/2-06	K41	Series II Socket	G
Coax	#16	M22520/2-35	K532-1	Series I, II, III and IV	H
Coax	#12	M22520/2-34	K323	Series I, II, III and IV	I
Quadrax	#24	M22520/2-37	K709	Quadrax Inner Contact	J

© 2010 Glenair, Inc.

Parallel Action Crimp Tool and Hex Die Set

1 Parallel action tool for use with hex crimp dies. 11 inches OAL, 2.0 pounds. Anodized aluminum frame, steel mechanism, plastic handles. Includes tool for die set removal. Accepts all M22520/5 die sets.

2 Die set for terminating coaxial shield to outer contact. Use with size #12 matched impedance M39029/102 and 103 type coaxial contacts. Set consists of upper and lower halves. Made of hardened steel with black oxide finish. Approximately 2 inches in length, assembled. Die set has two closures per illustration.

Figure	Glenair Part Number	Military Part Number	Daniels Part Number	Tool Code
1	**809-129**	M22520/5-01	HX4	K
2	**809-130**	M22520/5-03	Y196	L
3	**859-007**	M22520/5-45	Y143	M

Crimp Tool And Positioner For #12 Coaxial Outer Contact

For crimping size #12 shield sleeves. These mil spec approved tools feature a ratchet mechanism to prevent damage from overcrimping. Check calibration with M22520/3 gage.

1 Crimp tool for use with size #12 coaxial contacts. Black handles. 9.75 inches OAL, 1.25 pounds.

2 Positioner for use with size #12 coaxial contacts. Use with 809-133 (M22520/31-01) crimp tool.

Figure	Glenair Part Number	Military Part Number	Daniels Part Number	Tool Code
1	**809-133**	M22520/31-01	GS200-1	N
2	**809-134**	M22520/31-02	G2P330	P

Crimp Tool And Positioner For #16 Coaxial Outer Contact

For crimping size #16 shield sleeves. These mil spec approved tools feature a ratchet mechanism to prevent damage from overcrimping. Check calibration with M22520/3 gage.

1 Crimp tool for use with size #16 coaxial contacts. Blue handles. 9.75 inches OAL, 1.25 pounds.

2 Positioner for use with size #16 coaxial contacts. Use with 809-127 (M22520/4-01) crimp tool.

Figure	Glenair Part Number	Military Part Number	Daniels Part Number	Tool Code
1	**809-127**	M22520/4-01	GS100-1	Q
2	**809-126**	M22520/4-02	GP295	R

© 2010 Glenair, Inc.

GLENAIR, INC. • 1211 AIR WAY • GLENDALE, CA 91201-2497 • 818-247-6000 • FAX 818-500-9912

www.glenair.com

E-Mail: sales@glenair.com

Glenair®

MIL-DTL-38999 Series I, II, III and IV Pin Contact Selection Guide

38999 Series I, II, III & IV

AS39029 Pin Contacts

Contact Size	Type	Glenair Part Number	Military Part Number	Color Bands 1st	Color Bands 2nd	Color Bands 3rd	BIN	Wire Size	Tool Code
#10	S	850-002-10-528	M39029/58-528	GREEN	RED	GREY	528	#10 - #12	Consult Factory
	E	850-007-10-624	M39029/107-624	BLUE	RED	YELLOW	624		
#12	S	850-002-12-365	M39029/58-365	ORANGE	BLUE	GREEN	365	#12 - #14	A, B
	E	850-007-12-623	M39029/107-623	BLUE	RED	ORANGE	623		
	C	852-002-12-211	M39029/28-211	RED	BROWN	BROWN	211	RG174 RG179 RG316	C, I (inner)
	C	852-002-12-409	M39029/28-409	YELLOW	BLACK	WHITE	409	RG180	N, P (outer)
#16	S	850-002-16-364	M39029/58-364	ORANGE	BLUE	YELLOW	364	#16 - #20	A, B
	E	850-007-16-622	M39029/107-622	BLUE	RED	RED	622		
	C	852-008-16-424	M39029/76-424	YELLOW	RED	YELLOW	424	RG174 RG179 RG316	C, H (inner)
	C	852-008-16-425	M39029/76-425	YELLOW	RED	GREEN	425	RG178	Q, R (outer)
#20	S	850-002-20-363	M39029/58-363	ORANGE	BLUE	ORANGE	363	#20 - #24	C, D
	E	850-007-20-621	M39029/107-621	BLUE	RED	BROWN	621		
#22D	S	850-002-22-360	M39029/58-360	ORANGE	BLUE	BLACK	360	#22 - #28	C, E
	E	850-007-22-620	M39029/107-620	BLUE	RED	black	620		

Type	Crimp Style
S	Standard-Duty Crimp
E	Extended-Duty Crimp
C	Coaxial Crimp

BIN Color Coding

0	1	2	3	4	5	6	7	8	9
BLACK	BROWN	RED	ORANGE	YELLOW	GREEN	BLUE	VIOLET	GREY	WHITE

© 2010 Glenair, Inc. CAGE CODE 06324 Printed in U.S.A.

MIL-DTL-38999
Series I, III and IV
Socket Contact Selection Guide

Glenair®

38999 Series I, III & IV

AS39029 Socket Contacts

Contact Size	Type	Glenair Part Number	Military Part Number	Color Bands 1st	Color Bands 2nd	Color Bands 3rd	BIN	Wire Size	Tool Code
#10	S	850-001-10-527	M39029/56-527	GREEN	RED	VIOLET	527	#10 - #12	Consult Factory
	E	850-006-10-618	M39029/106-618	BLUE	BROWN	GREY	618		
#12	S	850-001-12-353	M39029/56-353	ORANGE	GREEN	ORANGE	353	#12 - #14	A, B
	E	850-006-12-617	M39029/106-617	BLUE	BROWN	VIOLET	617		
	C	852-003-12-416	M39029/75-416	YELLOW	BROWN	BLUE	416	RG174 RG179 RG316	C, I (inner)
	C	852-003-12-417	M39029/75-417	YELLOW	BROWN	VIOLET	417	RG180	N, P (outer)
#16	S	850-001-16-352	M39029/56-352	ORANGE	GREEN	RED	352	#16 - #20	A, B
	E	850-006-16-616	M39029/106-616	BLUE	BROWN	BLUE	616		
	C	852-009-16-428	M39029/77-428	YELLOW	RED	GREY	428	RG174 RG179 RG316	C, H (inner)
	C	852-009-16-429	M39029/77-429	YELLOW	RED	WHITE	429	RG178	Q, R (outer)
#20	S	850-001-20-351	M39029/56-351	ORANGE	GREEN	BROWN	351	#20 - #24	C, D
	E	850-006-20-615	M39029/106-615	BLUE	BROWN	GREEN	615		
#22D	S	850-001-22-348	M39029/56-348	ORANGE	YELLOW	GREY	348	#22 - #28	C, F
	E	850-006-22-614	M39029/106-614	BLUE	BROWN	YELLOW	614		

Type	Crimp Style
S	Standard-Duty Crimp
E	Extended-Duty Crimp
C	Coaxial Crimp

BIN Color Coding

0	1	2	3	4	5	6	7	8	9
BLACK	BROWN	RED	ORANGE	YELLOW	GREEN	BLUE	VIOLET	GREY	WHITE

© 2010 Glenair, Inc. CAGE CODE 06324 Printed in U.S.A.

Glenair®

MIL-DTL-38999
Series II
Socket Contact Selection Guide

38999 Series II

AS39029 Socket Contacts

Contact Size	Type	Glenair Part Number	Military Part Number	Color Bands 1st	Color Bands 2nd	Color Bands 3rd	BIN	Wire Size	Tool Code
#12	S	850-003-12-359	M39029/57-359	ORANGE	GREEN	WHITE	359	RG174 RG179 RG316	A, B
	C	852-001-12-210	M39029/27-210	RED	BROWN	BLACK	210		C, I (inner) N, P (outer)
	C	852-001-12-402	M39029/27-402	YELLOW	BLACK	RED	402	RG180	
#16	S	850-003-16-358	M39029/57-358	ORANGE	GREEN	GREY	358	#16 - #20	A, B
	C	852-010-16-432	M39029/78-432	YELLOW	ORANGE	RED	432	RG174 RG179 RG316	C, H (inner) Q, R (outer)
	C	852-010-16-433	M39029/78-433	YELLOW	ORANGE	ORANGE	433	RG178	
#20	S	850-003-20-357	M39029/57-357	ORANGE	GREEN	VIOLET	357	#20 - #24	C, D
#22D	S	850-003-22-354	M39029/57-354	ORANGE	GREEN	YELLOW	354	#22 - #28	C, G

Type	Crimp Style
S	Standard-Duty Crimp
E	Extended-Duty Crimp
C	Coaxial Crimp

BIN Color Coding									
0 BLACK	1 BROWN	2 RED	3 ORANGE	4 YELLOW	5 GREEN	6 BLUE	7 VIOLET	8 GREY	9 WHITE

© 2010 Glenair, Inc.
CAGE CODE 06324
Printed in U.S.A.

233-105-00
MIL-DTL-38999 Series III Type
Wall Mount Environmental Receptacle Connector

Basic Part Number
233-105 - D38999 Series III Type Power Connector

Finish Material
(See Table II)

Shell Size
09 = A
11 = B
13 = C
15 = D
17 = E
19 = F
21 = G
23 = H
25 = J

Insert Arrangement
(See Pages D-2, 3 & 4)

Alternate Key Position
A, B, C, D, or E
(N for Normal)

233-105 - 00 XM 11 - 21 S N

Shell Style
00 - Receptacle, Wall Mount w/ Slotted Holes
D0 - Receptacle, Wall Mount w/ Round Holes
T0 - Receptacle, Wall Mount w/ Tapped Holes

Contact Type
S = Socket
P = Pin
(See Pages D-8 and D-9)

D0 - ROUND HOLES

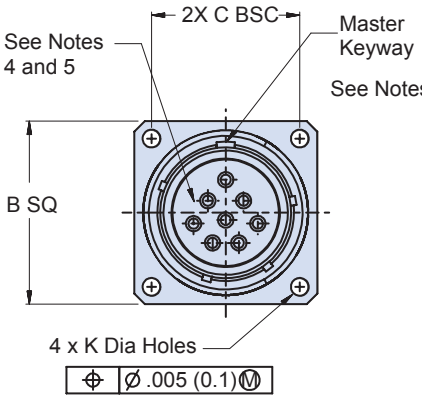

00 - SLOTTED HOLES

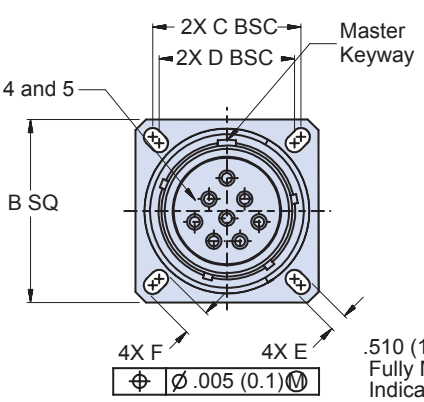

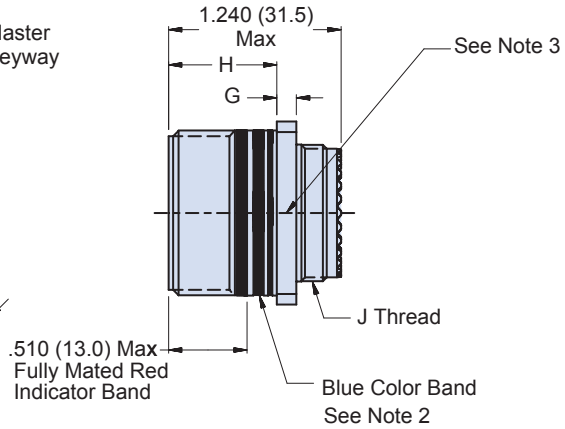

Consult factory for available insert arrangements.

APPLICATION NOTES

1. Material/ Finishes:
   Shells, Jam Nut - See Table II
   (Composite Jam Nut & Composite Coupling Nut No Plating Required).
   Insulators- High Grade Rigid Dielectric/ N.A
   Seals- Fluorosilicone/ N.A.
2. Blue Color Band indicates rear release retention system.
3. Assembly to be identified with Glenair's name, part number and date code space permitting.
4. Insert arrangement in accordance with MIL-STD-1560.
5. Insert arrangement shown is for reference only.
6. Metric dimensions (mm) are in parentheses.

© 2010 Glenair, Inc.
CAGE CODE 06324
Printed in U.S.A.

Glenair®

233-105-00
MIL-DTL-38999 Series III Type
Wall Mount Environmental Receptacle Connector

TABLE II: FINISH

SYM	MATERIAL	FINISH	MIL SYM
ME	Aluminum	Electroless Nickel	F
NF		Cadmium O.D. Over Electroless Nickel	W
ZN		Zinc Ni, Olive Drab	Z
ZE		Zinc Ni, No Chromate	
ZR		Zinc Ni, Black (Tri-Valent CR)	
AL		Pure-Dense Electro-Deposited Aluminum	P
MT		Ni-PTFE *1000 Hour Grey™*	T
XM	Composite	Electroless Nickel	M
XMT		Ni-PTFE *1000 Hour Grey™*	
XO		No Finish	
XW		Cadmium O.D. over Electroless Nickel	J
Z1	Stainless Steel	Passivate	
ZC		Zinc Colbalt	
ZL		Electro-Deposited Nickel	
ZW		Cadmium O.D. over Nickel	
AB	Marine Bronze	None (Clean Only)	

*Consult Factory for Additional Plating Options

TABLE III: SHELL SIZE

Shell Size Code	Shell Size	B SQ	C BSC	D BSC	E	F	G	H	J Thread	K Holes Dia
A	09	.949 (24.1) .925 (23.5)	.719 (18.3)	.594 (15.1)	.136 (3.5) .120 (0.1)	.224 (5.7) .208 (5.3)	.144 (3.7) .083 (2.1)	.820 (20.8) .768 (19.5)	M12 X 1.0-6g 0.100R	.136 (3.5) .120 (3.0)
B	11	1.043 (26.5) 1.019 (25.9)	.812 (20.6)	.719 (18.3)	.136 (3.5) .120 (0.1)	.202 (5.1) .188 (4.7)	.144 (3.7) .083 (2.1)	.820 (20.8) .768 (19.5)	M15 x 1.0-6g 0.100R	.136 (3.5) .120 (3.0)
C	13	1.138 (28.9) 1.114 (28.3)	.906 (23.0)	.812 (20.6)	.136 (3.5) .120 (0.1)	.202 (5.1) .188 (4.7)	.144 (3.7) .083 (2.1)	.820 (20.8) .768 (19.5)	M18 x 1.0-6g 0.100R	.136 (3.5) .120 (3.0)
D	15	1.232 (31.3) 1.208 (30.7)	.969 (24.6)	.906 (23.0)	.136 (3.5) .120 (0.1)	.202 (5.1) .208 (5.3)	.144 (3.7) .083 (2.1)	.820 (20.8) .768 (19.5)	M22 x 1.0-6g 0.100R	.136 (3.5) .120 (3.0)
E	17	1.323 (33.6) 1.299 (33.0)	1.062 (27.0)	.969 (24.6)	.136 (3.5) .120 (0.1)	.202 (5.1) .188 (4.7)	.144 (3.7) .083 (2.1)	.820 (20.8) .768 (19.5)	M25 x 1.0-6g 0.100R	.136 (3.5) .120 (3.0)
F	19	1.449 (36.8) 1.425 (36.2)	1.156 (29.4)	1.062 (27.0)	.136 (3.5) .120 (0.1)	.202 (5.1) .188 (4.7)	.144 (3.7) .083 (2.1)	.820 (20.8) .768 (19.5)	M28 x 1.0-6g 0.100R	.136 (3.5) .120 (3.0)
G	21	1.575 (40.0) 1.551 (39.4)	1.250 (31.8)	1.156 (29.4)	.136 (3.5) .120 (0.1)	.202 (5.1) .188 (4.7)	.171 (65.2) .083 (39.8)	.790 (20.1) .736 (18.7)	M31 x 1.0-6g 0.100R	.136 (3.5) .120 (3.0)
H	23	1.701 (43.2) 1.677 (42.6)	1.375 (34.9)	1.250 (31.8)	.162 (4.1) .146 (3.7)	.250 (6.4) .234 (5.9)	.171 (65.2) .083 (39.8)	.790 (20.1) .736 (18.7)	M34 x 1.0-6g 0.100R	.162 (4.1) .146 (3.7)
J	25	1.823 (46.3) 1.799 (45.7)	1.500 (38.1)	1.375 (34.9)	.162 (4.1) .146 (3.7)	.250 (6.4) .234 (5.9)	.171 (65.2) .083 (39.8)	.790 (20.1) .736 (18.7)	M37 x 1.0-6g 0.100R	.162 (4.1) .146 (3.7)

© 2010 Glenair, Inc.

GLENAIR, INC. • 1211 AIR WAY • GLENDALE, CA 91201-2497 • 818-247-6000 • FAX 818-500-9912
www.glenair.com E-Mail: sales@glenair.com

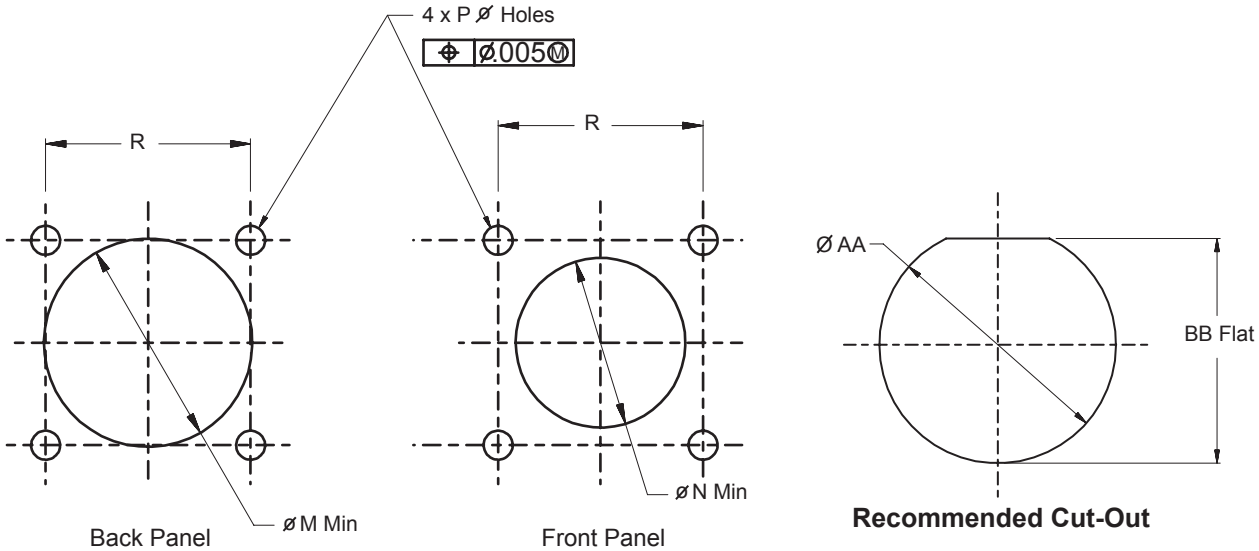

Back Panel Mounting

Front Panel Mounting

Recommended Cut-Out

Recommended Mounting Holes for Wall Mount Receptacle

TABLE IV: SHELL SIZE

Shell Size Code	Shell Size	AA Dia	BB Flat	M Ø Min	N Ø Min	P Ø Holes	R BSC
A	09	.703 (17.9) .693 (17.6)	.657 (16.7) .655 (16.6)	.656 (16.7)	.516 (13.1)	.133 (3.4) .123 (3.1)	.719 (18.3)
B	11	.835 (21.2) .825 (21.0)	.771 (19.6) .769 (19.5)	.796 (20.2)	.625 (15.9)	.133 (3.4) .123 (3.1)	.812 (20.6)
C	13	1.020 (25.9) 1.010 (25.7)	.955 (24.3) .943 (24.0)	.922 (23.4)	750 (19.1)	.133 (3.4) .123 (3.1)	.906 (23.0)
D	15	1.145 (29.1) 1.135 (28.8)	1.085 (27.6) 1.083 (27.5)	1.047 (26.6)	.906 (23.0)	.133 (3.4) .123 (3.1)	.969 (24.6)
E	17	1.270 (32.3) 1.260 (32.0)	1.210 (30.7) 1.208 (30.7)	1.219 (31.0)	1.016 (25.8)	.133 (3.4) .123 (3.1)	1.062 (27.0)
F	19	1.395 (35.4) 1.385 (35.2)	1.335 (33.9) 1.333 (33.9)	1.297 (32.9)	1.141 (29.0)	.133 (3.4) .123 (3.1)	1.156 (29.4)
G	21	1.520 (38.6) 1.510 (38.4)	1.460 (37.1) 1.458 (37.0)	1.422 (36.1)	1.266 (32.2)	.133 (3.4) .123 (3.1)	1.250 (31.8)
H	23	1.645 (41.8) 1.635 (41.5)	1.585 (40.3) 1.583 (40.2)	1.547 (39.3)	1.375 (34.9)	.159 (4.0) .149 (3.8)	1.375 (34.9)
J	25	1.770 (45.0) 1.760 (44.7)	1.710 (43.4) 1.708 (43.4)	1.672 (42.5)	1.484 (37.7)	.155 (3.9) .145 (3.7)	1.500 (38.1)

Metric dimensions (mm) are indicated in parentheses

© 2010 Glenair, Inc.

GLENAIR, INC. • 1211 AIR WAY • GLENDALE, CA 91201-2497 • 818-247-6000 • FAX 818-500-9912
www.glenair.com
E-Mail: sales@glenair.com

233-105-07
MIL-DTL-38999 Series III Type
Jam Nut Environmental Receptacle Connnector

Basic Part Number
233-105 - D38999 Series III Type Power Connector

Finish Material
(See Table II)

Shell Size
09 = A
11 = B
13 = C
15 = D
17 = E
19 = F
21 = G
23 = H
25 = J

Insert Arrangement
(See Pages D-2, 3 & 4)

Alternate Key Position
A, B, C, D, or E
(N for Normal)

233-105 - 07 Z1 11 - 21 S N

Shell Style
07 - Receptacle, Jam Nut

Contact Type
S = Socket
P = Pin
(See Pages D-8 and D-9)

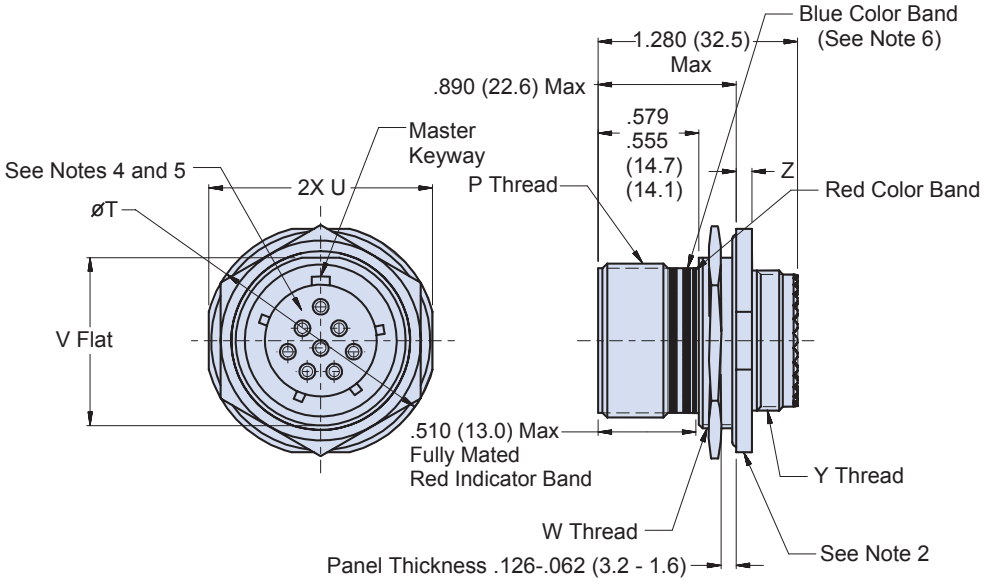

Consult factory for available insert arrangements.

APPLICATION NOTES

1. Material/ Finishes:
   Shells, Jam Nut - See Table II
   (Composite Jam Nut No Plating Required).
   Insulators- High Grade Rigid Dielectric/ N.A
   Seals- Fluorosilicone/ N.A.
2. Assembly to be identified with Glenair's name, part number and date code space permitting.
3. Modified major diameter 1.252-1.257 (31.80-31.95).
4. Insert arrangement in accordance with MIL-STD-1560.
5. Insert arrangement shown is for reference only.
6. Blue Color Band indicates rear release retention system.
7. Metric dimensions (mm) are in parentheses.

© 2010 Glenair, Inc. CAGE CODE 06324 Printed in U.S.A.

TABLE II: FINISH			
SYM	MATERIAL	FINISH	MIL SYM
ME	Aluminum	Electroless Nickel	F
NF		Cadmium O.D. Over Electroless Nickel	W
ZN		Zinc Ni, Olive Drab	Z
ZE		Zinc Ni, No Chromate	
ZR		Zinc Ni, Black (Tri-Valent CR)	
AL		Pure-Dense Electro-Deposited Aluminum	P
MT		Ni-PTFE *1000 Hour Grey™*	T
XM	Composite	Electroless Nickel	M
XMT		Ni-PTFE *1000 Hour Grey™*	
XO		No Finish	
XW		Cadmium O.D. over Electroless Nickel	J
Z1	Stainless Steel	Passivate	
ZC		Zinc Colbalt	
ZL		Electro-Deposited Nickel	
ZW		Cadmium O.D. over Nickel	
AB	Marine Bronze	None (Clean Only)	

*Consult Factory for Additional Plating Options

D

TABLE III: SHELL SIZE								
Shell Size Code	Shell Size	P Thread	T Dia	U	V	W Thread	Y Thread	Z
A	09	.6250-.1P-.3L-TS-2A	1.200 (30.5) 1.178 (29.9)	1.078 (27.4) 1.048 (26.6)	.654 (16.6) .645 (16.4)	M17 x 1.0-6g 0.100R	M12 x 1.0-6g 0.100R	.122 (3.1) .083 (2.1)
B	11	.7500-.1P-.3L-TS-2A	1.386 (35.2) 1.362 (34.6)	1.268 (32.2) 1.236 (31.4)	.755 (19.2) .745 (18.9)	M20 x 1.0-6g 0.100R	M15 x 1.0-6g 0.100R	
C	13	.8750-.1P-.3L-TS-2A	1.512 (38.4) 1.488 (37.8)	1.390 (35.3) 1.358 (34.5)	.942 (23.9) .932 (23.7)	M25 x 1.0-6g 0.100R	M18 x 1.0-6g 0.100R	
D	15	1.0000-.1P-.3L-TS-2A	1.638 (41.6) 1.614 (41.0)	1.516 (38.5) 1.484 (37.7)	1.066 (27.1) 1.056 (26.8)	M28 x 1.0-6g 0.100R	M22 x 1.0-6g 0.100R	
E	17	1.1875-.1P-.3L-TS-2A	1.764 (44.8) 1.740 (44.2)	1.642 (41.7) 1.610 (40.9)	1.191 (30.3) 1.181 (30.0)	M32 x 1.0-6g 0.100R*	M25 x 1.0-6g 0.100R	
F	19	1.2500-.1P-.3L-TS-2A	1.949 (49.5) 1.925 (48.9)	1.827 (46.4) 1.795 (45.6)	1.316 (33.4) 1.306 (33.2)	M35 x 1.0-6g 0.100R	M28 x 1.0-6g 0.100R	.153 (3.9) .114 (2.9)
G	21	1.3750-.1P-.3L-TS-2A	2.075 (52.7) 2.051 (52.1)	1.953 (49.6) 1.921 (48.8)	1.441 (36.6) 1.431 (36.3)	M38 x 1.0-6g 0.100R	M31 x 1.0-6g 0.100R	
H	23	1.5000-.1P-.3L-TS-2A	2.201 (55.9) 2.177 (55.3)	2.079 (52.8) 2.047 (52.0)	1.566 (39.8) 1.556 (39.5)	M41 x 1.0-6g 0.100R	M34 x 1.0-6g 0.100R	
J	25	1.6250-.1P-.3L-TS-2A	2.323 (59.0) 2.299 (58.4)	2.205 (56.0) 2.173 (55.2)	1.691 (43.0) 1.681 (42.7)	M44 x 1.0-6g 0.100R	M37 x 1.0-6g 0.100R	

*See Note 3

© 2010 Glenair, Inc.

GLENAIR, INC. • 1211 AIR WAY • GLENDALE, CA 91201-2497 • 818-247-6000 • FAX 818-500-9912
www.glenair.com E-Mail: sales@glenair.com

233-105-05
MIL-DTL-38999 Series III Type
In-Line Environmental Receptacle Connector

Basic Part Number
233-105 - D38999 Series III Type Power Connector

Finish Material
(See Table II)

Shell Size
09 = A
11 = B
13 = C
15 = D
17 = E
19 = F
21 = G
23 = H
25 = J

Insert Arrangement
(See Pages D-2, 3 & 4)

Alternate Key Position
A, B, C, D, or E
(N for Normal)

233-105 - 05 M 21 - 11 S N

Shell Style
05 - In Line Receptacle

Contact Type
S = Socket
P = Pin
(See Pages D-8 and D-9)

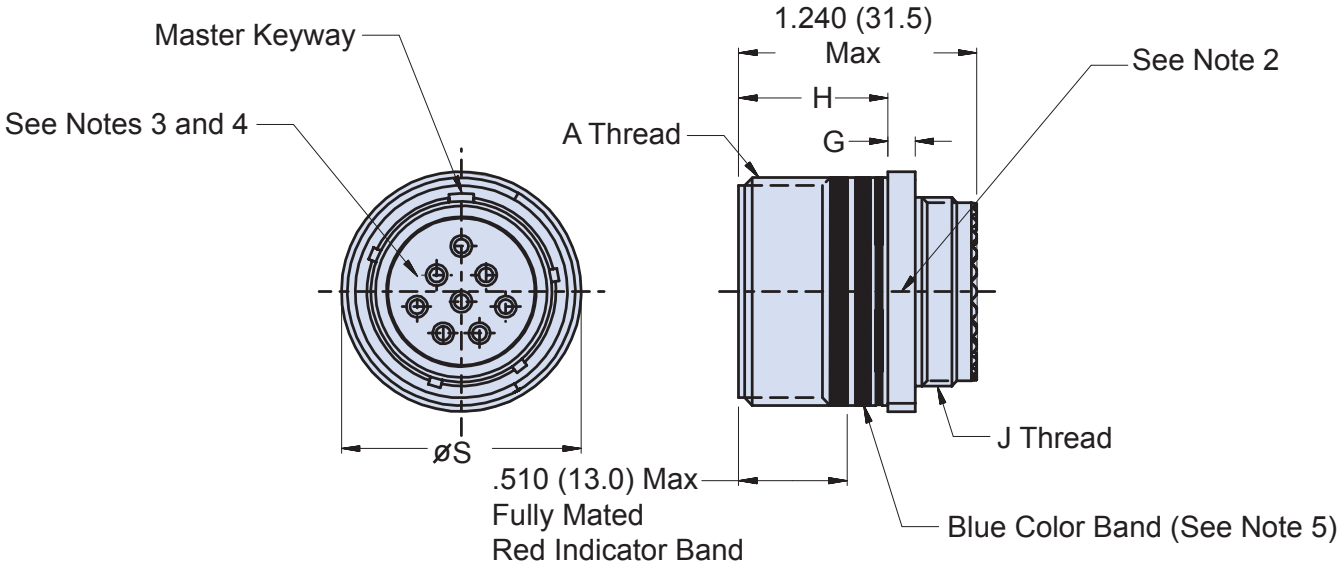

Consult factory for available insert arrangements.

APPLICATION NOTES

1. Material/ Finishes:
   Shells - See Table II
   Insulator- High Grade Rigid Dielectric/ N.A
   Seals- Fluorosilicone/ N.A.
2. Assembly to be identified with Glenair's name, part number and date code space permitting.
3. Insert arrangement in accordance with MIL-STD-1560.
4. Insert arrangement shown is for reference only.
5. Blue Color Band indicates rear release retention system.
7. Metric Dimensions (mm) are indicated in parentheses.

© 2010 Glenair, Inc. CAGE CODE 06324 Printed in U.S.A.

TABLE II: FINISH			
SYM	MATERIAL	FINISH	MIL SYM
ME	Aluminum	Electroless Nickel	F
NF		Cadmium O.D. Over Electroless Nickel	W
ZN		Zinc Ni, Olive Drab	Z
ZE		Zinc Ni, No Chromate	
ZR		Zinc Ni, Black (Tri-Valent CR)	
AL		Pure-Dense Electro-Deposited Aluminum	P
MT		Ni-PTFE *1000 Hour Grey™*	T
XM	Composite	Electroless Nickel	M
XMT		Ni-PTFE *1000 Hour Grey™*	
XO		No Finish	
XW		Cadmium O.D. over Electroless Nickel	J
Z1	Stainless Steel	Passivate	
ZC		Zinc Colbalt	
ZL		Electro-Deposited Nickel	
ZW		Cadmium O.D. over Nickel	
AB	Marine Bronze	None (Clean Only)	

*Consult Factory for Additional Plating Options

D

TABLE III: SHELL SIZE						
Shell Size Code	Shell Size	A Thread	G	H	S Max Dia	J Thread
A	09	.6250-.1P-.3L-TS-2A	.144 (3.7) .083 (2.1)	.823 (20.9) .768 (19.5)	.858 (21.8)	M12 x 1.0-6g 0.100R
B	11	.7500-.1P-.3L-TS-2A	.144 (3.7) .083 (2.1)	.823 (20.9) .768 (19.5)	.984 (25.0)	M15 x 1.0-6g 0.100R
C	13	.8750-.1P-.3L-TS-2A	.144 (3.7) .083 (2.1)	.823 (20.9) .768 (19.5)	1.157 (29.4)	M18 x 1.0-6g 0.100R
D	15	1.0000-.1P-.3L-TS-2A	.144 (3.7) .083 (2.1)	.823 (20.9) .768 (19.5)	1.280 (32.5)	M22 x 1.0-6g 0.100R
E	17	1.1875-.1P-.3L-TS-2A	.144 (3.7) .083 (2.1)	.823 (20.9) .768 (19.5)	1.406 (35.7)	M25 x 1.0-6g 0.100R
F	19	1.2500-.1P-.3L-TS-2A	.144 (3.7) .083 (2.1)	.823 (20.9) .768 (19.5)	1.516 (38.5)	M28 x 1.0-6g 0.100R
G	21	1.3750-.1P-.3L-TS-2A	.171 (65.2) .083 (39.8)	.791 (20.0) .736 (18.7)	1.642 (41.7)	M31 x 1.0-6g 0.100R
H	23	1.5000-.1P-.3L-TS-2A	.171 (65.2) .083 (39.8)	.791 (20.0) .736 (18.7)	1.768 (44.9)	M34 x 1.0-6g 0.100R
J	25	1.6250-.1P-.3L-TS-2A	.171 (65.2) .083 (39.8)	.791 (20.0) .736 (18.7)	1.890 (48.0)	M37 x 1.0-6g 0.100R

© 2010 Glenair, Inc.

GLENAIR, INC. • 1211 AIR WAY • GLENDALE, CA 91201-2497 • 818-247-6000 • FAX 818-500-9912
www.glenair.com E-Mail: sales@glenair.com

233-105-G6
MIL-DTL-38999 Series III Type
Environmental Plug Connector

Basic Part Number
233-105 - D38999 Series III Type Power Connector

Finish Material
(See Table II)

Shell Size
09 = A
11 = B
13 = C
15 = D
17 = E
19 = F
21 = G
23 = H
25 = J

Insert Arrangement
(See Pages D-2, 3 & 4)

Alternate Key Position
A, B, C, D, or E
(N for Normal)

233-105 - G6 M 11 - 21 S N

Shell Style
G6 = Plug

Contact Type
S = Socket
P = Pin
(See Pages D-8 and D-9)

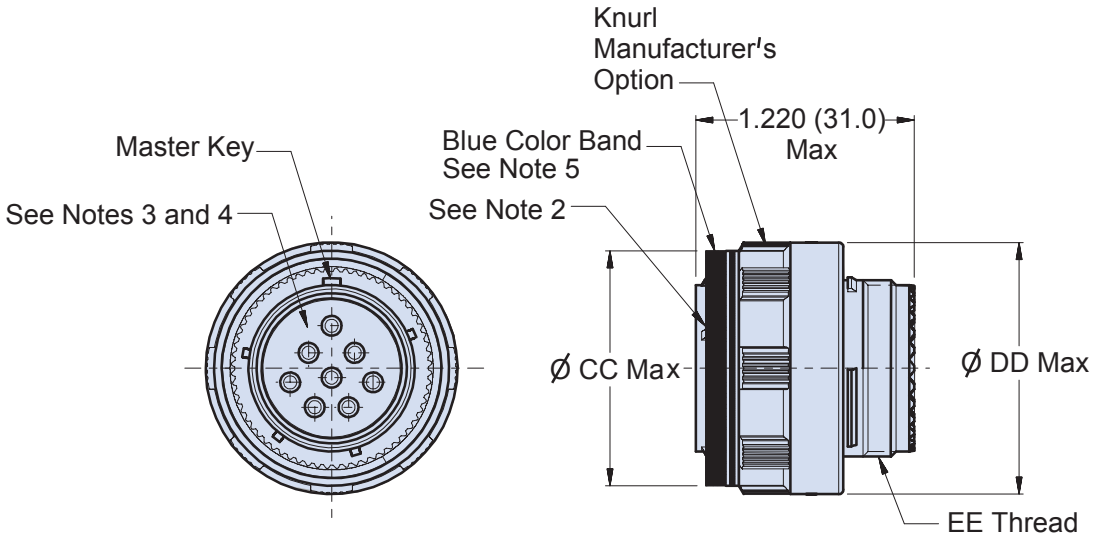

Consult factory for available insert arrangements.

APPLICATION NOTES

1. Material/ Finishes:
   Barrel, Coupling Nut - See Table II
   (Composite Coupling Nut - No Plating Required).
   Insulators- High Grade Rigid Dielectric/ N.A
   Seals- Fluorosilicone/ N.A.
2. Assembly to be identified with Glenair's name, part number and date code space permitting.
3. Insert arrangement in accordance with MIL-STD-1560.
4. Insert arrangement shown is for reference only.
5. Blue Color Band indicates rear release retention system.
7. Metric Dimensions (mm) are indicated in parentheses.

© 2010 Glenair, Inc. CAGE CODE 06324 Printed in U.S.A.

TABLE II: FINISH			
SYM	MATERIAL	FINISH	MIL SYM
ME	Aluminum	Electroless Nickel	F
NF		Cadmium O.D. Over Electroless Nickel	W
ZN		Zinc Ni, Olive Drab	Z
ZE		Zinc Ni, No Chromate	
ZR		Zinc Ni, Black (Tri-Valent CR)	
AL		Pure-Dense Electro-Deposited Aluminum	P
MT		Ni-PTFE *1000 Hour Grey™*	T
XM	Composite	Electroless Nickel	M
XMT		Ni-PTFE *1000 Hour Grey™*	
XO		No Finish	
XW		Cadmium O.D. over Electroless Nickel	J
Z1	Stainless Steel	Passivate	
ZC		Zinc Colbalt	
ZL		Electro-Deposited Nickel	
ZW		Cadmium O.D. over Nickel	
AB	Marine Bronze	None (Clean Only)	

*Consult Factory for Additional Plating Options

TABLE III: SHELL SIZE				
Shell Size Code	Shell Size	CC Max Dia	DD Max Dia	EE Thread
A	09	.811 (20.6)	.858 (21.8)	M12 x 1.0-6g 0.100R
B	11	.929 (23.6)	.984 (25.0)	M15 x 1.0-6g 0.100R
C	13	1.110 (28.2)	1.157 (29.4)	M18 x 1.0-6g 0.100R
D	15	1.232 (31.3)	1.280 (32.5)	M22 x 1.0-6g 0.100R
E	17	1.358 (34.5)	1.406 (35.7)	M25 x 1.0-6g 0.100R
F	19	1.469 (37.3)	1.516 (38.5)	M28 x 1.0-6g 0.100R
G	21	1.594 (40.5)	1.642 (41.7)	M31 x 1.0-6g 0.100R
H	23	1.720 (43.7)	1.768 (44.9)	M34 x 1.0-6g 0.100R
J	25	1.843 (46.8)	1.890 (48.0)	M37 x 1.0-6g 0.100R

© 2010 Glenair, Inc.

GLENAIR, INC. • 1211 AIR WAY • GLENDALE, CA 91201-2497 • 818-247-6000 • FAX 818-500-9912
www.glenair.com
E-Mail: sales@glenair.com

947-050
Jam Nut Mount Shorting Receptacle
MIL-DTL-38999 Series I Type

Product Series

Finish
See Table II

Shell Size
A - 9
B - 11
C - 13
D - 15
E - 17
F - 19
G - 21
H - 23
J - 25

Contact Style
P - Pin
S - Socket

947 - 050 M 19 - 35 P B

Basic Number

Insert Arrangement
Per MIL-DTL-38999 Series I
MIL-STD-1560

Alternate Key Position
A, B, C, D,
(*N* = Normal)

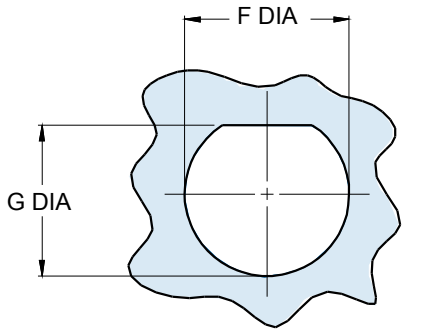

Recommended Panel Cut-Out

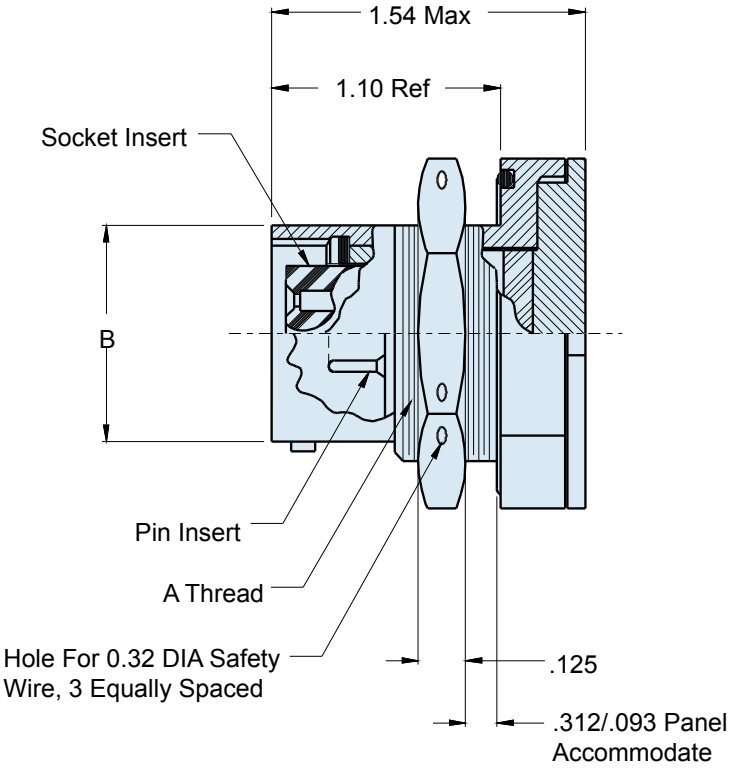

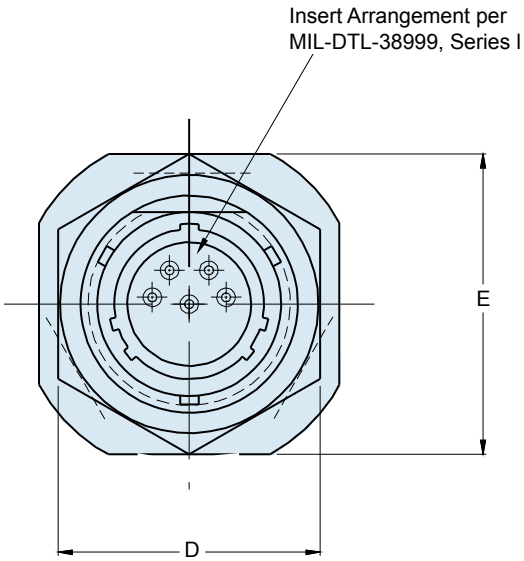

© 2010 Glenair, Inc.

GLENAIR, INC. • 1211 AIR WAY • GLENDALE, CA 91201-2497 • 818-247-6000 • FAX 818-500-9912
www.glenair.com
E-Mail: sales@glenair.com

947-050
Jam Nut Mount Shorting Receptacle
MIL-DTL-38999 Series I Type

Glenair®

TABLE I: CONNECTOR DIMENSIONS						
SHELL SIZE	A THREAD CLASS 2A	B DIA MAX	D HEX	E FLATS	F DIA ±.005(0.1)	G +.000-.005 (0-0.1)
09	11/16-24 UNEF	.573(14.6)	.875(22.2)	1.062(27.0)	.703(17.9)	.699(17.8)
11	13/16-20 UNEF	.701(17.8)	1.000(25.4)	1.250(31.8)	.827(21.0)	.769(19.5)
13	1 -20 UNEF	.851(21.6)	1.188(30.2)	1.375(34.9)	1.015(25.8)	.955(24.3)
15	1 1/8-18 UNEF	.976(24.8)	1.312(33.3)	1.500(38.1)	1.140(29.0)	1.084(27.5)
17	1 1/4-18 UNEF	1.101(28.0)	1.438(36.5)	1.625(41.3)	1.265(32.1)	1.208(30.7)
19	1 3/8-18 UNEF	1.208(30.7)	1.562(39.7)	1.812(46.0)	1.390(35.3)	1.333(33.9)
21	1 1/2-18 UNEF	1.333(33.9)	1.688(42.9)	1.938(49.2)	1.515(38.5)	1.459(37.1)
23	1 5/8-18 UNEF	1.458(37.0)	1.812(46.0)	2.062(52.4)	1.640(41.7)	1.580(40.1)
25	1 3/4-18 UNS	1.583(40.2)	2.000(50.8)	2.188(55.6)	1.765(44.8)	1.709(43.4)

TABLE II: FINISH		
SYM	MATERIAL	FINISH
A	Aluminum	Cadmium Plate/Bright Dip
B		Cadmium Plate/Olive Drab
E		Gold Iridite
J		Gold Iridite over Cadmium Plate over Nickel Plate
L		Cadmium Plate/Olive Drab over Nickel Plate (500-Hour Salt Spray)
M		Electroless Nickel
N		Cadmium Plate/Olive Drab over Nickel Plate
NF		Cadmium Plate/Olive Drab over Nickel Plate (500 Hour Salt Spray)
P		Nickel Plate
T		Cadmium Plate over Nickel Plate
W		Leached Iridite
Y		Gold Iridite over Cadmium Plate
Z		Special per Purchase Order

*Consult Factory for Additional Plating Options

APPLICATION NOTES

1. Assembly identified with manufacturer's name and part number, space permitting.
2. Material/finish:
   Shell assembly, jam nut, locking coupling nut—aluminum alloy/ see Table II
   Contacts—copper alloy/gold plate
   Insulators—high grade dielectric/N.A.
   Bayonet pins—CRES/passivate
   Ground wafer—copper/tin plate
   Conductive seal—Consil II/N.A.
3. Metric Dimensions (mm) are indicated in parentheses.

© 2010 Glenair, Inc. CAGE CODE 06324 Printed in U.S.A.

GLENAIR, INC. • 1211 AIR WAY • GLENDALE, CA 91201-2497 • 818-247-6000 • FAX 818-500-9912
www.glenair.com E-Mail: sales@glenair.com

GC487
Shorting Bulkhead Feed-Thru
MIL-DTL-38999 Series I Type

Product Series

Shell Size
09
11
13
15
17
19
21
23
25

Insert Arrangement
Per MIL-DTL-38999 Series I
MIL-STD-1560

GC487 M 19 - 35 B

Connector Material and Finish
See Table II for Options

Alternate Key Position
A, B, C, D,
(***N*** = Normal)

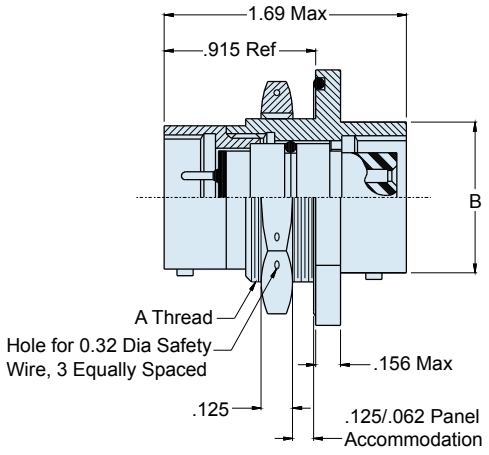

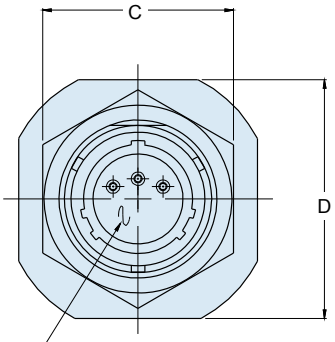

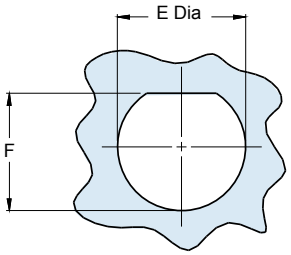

Recommended Panel Cut-Out

TABLE II: FINISH

SYM	FINISH
M	Electroless Nickel
MT	Ni-PTFE *1000 Hour Grey™* (Nickel-Fluorocarbon Polymer)
NF	Cadmium O.D. Over Electroless Nickel
N	Cadmium O.D. Over Nickel Plate

TABLE I: CONNECTOR DIMENSIONS

SHELL SIZE	A THREAD CLASS 2A	B DIA MAX	C HEX	D FLATS	E DIA ±.005(0.1)	F +.000-.005 (0-0.1)
09	11/16-24 UNEF	.573(14.6)	.875(22.2)	1.062(27.0)	.703(17.9)	.669(17.0)
11	13/16-20 UNEF	.701(17.8)	1.000(25.4)	1.250(31.8)	.827(21.0)	.769(19.5)
13	1 -20 UNEF	.851(21.6)	1.188(30.2)	1.375(34.9)	1.015(25.8)	.955(24.3)
15	1 1/8-18 UNEF	.976(24.8)	1.312(33.3)	1.500(38.1)	1.140(29.0)	1.084(27.5)
17	1 1/4-18 UNEF	1.101(28.0)	1.438(36.5)	1.625(41.3)	1.265(32.1)	1.208(30.7)
19	1 3/8-18 UNEF	1.208(30.7)	1.562(39.7)	1.812(46.0)	1.390(35.3)	1.333(33.9)
21	1 1/2-18 UNEF	1.333(33.9)	1.688(42.9)	1.938(49.2)	1.515(38.5)	1.459(37.1)
23	1 5/8-18 UNEF	1.458(37.0)	1.812(46.0)	2.062(52.4)	1.640(41.7)	1.580(40.1)
25	1 3/4-18 UNS	1.583(40.2)	2.000(50.8)	2.188(55.6)	1.765(44.8)	1.709(43.4)

APPLICATION NOTES

1. Assembly identified with manufacturer's name and part number, space permitting
2. Material/finish:
   Shell assembly, jam nut, lock ring—al alloy/see Table II
   Contacts—copper alloy/gold plate
   Bayonet pins—CRES/passivate
   0-rings, interfacial & peripheral seals—silicone/N.A.
   Insulators—high grade rigid dielectric/ N.A.
3. Metric Dimensions (mm) are indicated in parentheses

© 2010 Glenair, Inc. CAGE CODE 06324 Printed in U.S.A.

250-005
Shorting Plug
MIL-DTL-38999 Series II Type

Environmental Connectors

Product Series

Finish
See Table II

Shell Size
08
10
12
14
16
18
20
22
24

Contact Style
P - Pin
S - Socket

250 - 005 NF 10 - 5 S A

Basic Number

Insert Arrangement
Per MIL-DTL-38999 Series II
MIL-STD-1560

Alternate Key Position
A, B, C, D,
(*N* = Normal)

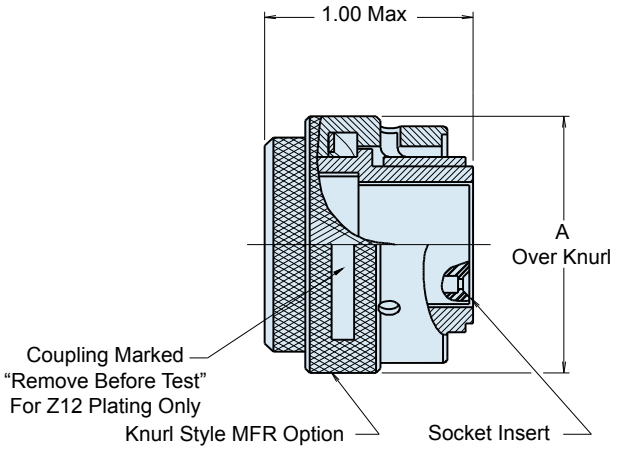

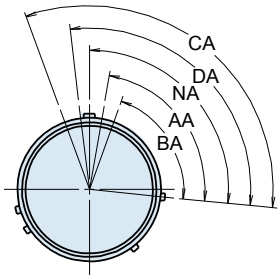

Figure 1
Master Keyway Position
Face View Shown
Insert Arrangement Does
Not Rotate With Master Keyway

D

TABLE I: CONNECTOR DIMENSIONS

SHELL SIZE	A MAX	ALTERNATE KEYWAY POSITIONS				
		NA	AA	BA	CA	DA
08	.750(19.1)	100A	82A	-	-	118A
10	.859(21.8)	100A	86A	72A	128A	114A
12	1.031(26.2)	100A	80A	68A	132A	120A
14	1.156(29.4)	100A	79A	66A	134A	121A
16	1.281(32.5)	100A	82A	70A	130A	118A
18	1.406(35.7)	100A	82A	72A	130A	118A
20	1.531(38.9)	100A	82A	70A	130A	118A
22	1.641(41.7)	100A	85A	74A	126A	115A
24	1.766(44.9)	100A	85A	74A	126A	115A

TABLE II: FINISH

SYM	FINISH
M	Electroless Nickel
MT	Ni-PTFE *1000 Hour Grey™* (Nickel-Fluorocarbon Polymer)
NF	Cadmium O.D. Over Electroless Nickel
N	Cadmium O.D. Over Nickel Plate

APPLICATION NOTES

1. Assembly identified with manufacturer's name, part number and date code.
2. All contacts are shorted to each other and to the shell, max resistance between contacts and shall shall be 2.5 milliohms.
3. Material/Finish:
   Barrel, coupling nut, cover—aluminum alloy/see Table II
   Contacts, grounding ring—copper alloy/gold plate
   Grounding wafer—copper/tin plate
   Wave washer—CRES/passivate
   Insulators—high grade rigid dielectric/N.A.
4. Metric Dimensions (mm) are indicated in parentheses.

© 2010 Glenair, Inc.

GLENAIR, INC. • 1211 AIR WAY • GLENDALE, CA 91201-2497 • 818-247-6000 • FAX 818-500-9912
www.glenair.com
E-Mail: sales@glenair.com

947-150
Quick Disconnect Plug Connector
MIL-DTL-38999 Series III Type

Product Series

Finish
See Table II

Shell Size
B - 11
C - 13
D - 15
E - 17
F - 19
G - 21
H - 23
J - 25

Lanyard Length Code
See Table III

Alternate Key Position
A, B, C, D or E
(N for Normal)

947 - 150 NF B - 35 E P A

Basic Number

Insert Arrangement
Per MIL-DTL-38999 Series III
MIL-STD-1560

Contact Style
P - Pin
S - Socket

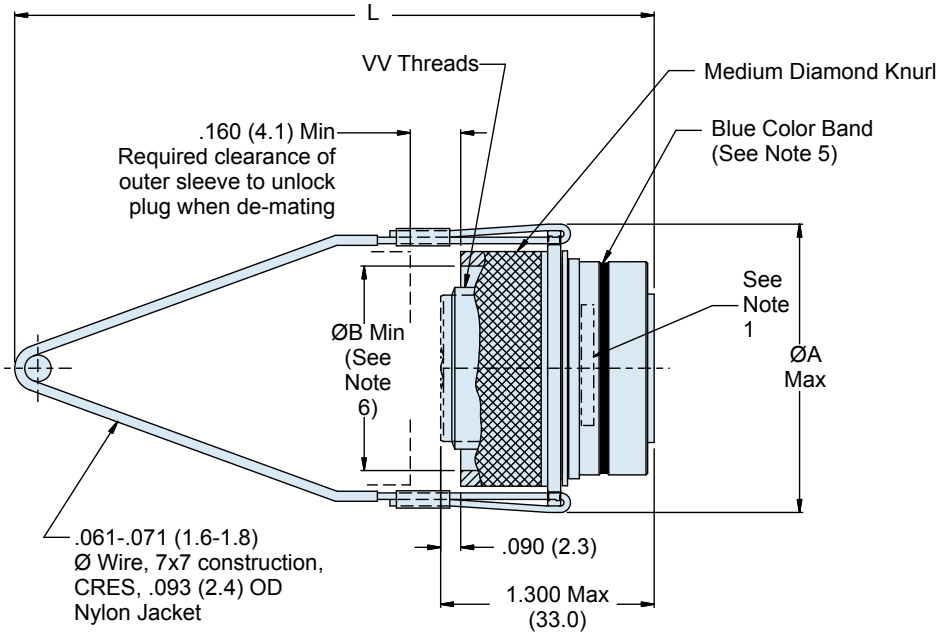

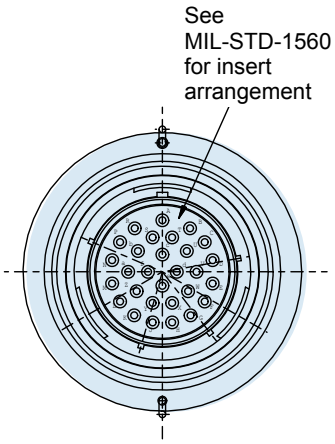

TABLE I: CONNECTOR DIMENSIONS

Shell Size	Shell Size Code	A Max	B Min	W Thread
09	A	1.720 (43.7)	.977 (24.8)	M12x1-6g-0.100R
11	B	1.746 (44.3)	1.003 (25.5)	M15x1-6g-0.100R
13	C	1.872 (47.5)	1.177 (29.9)	M18x1-6g-0.100R
15	D	2.104 (53.4)	1.299 (33.0)	M22x1-6g-0.100R
17	E	2.204 (56.0)	1.425 (36.2)	M25x1-6g-0.100R
19	F	2.230 (56.5)	1.535 (39.0)	M28x1-6g-0.100R
21	G	2.472 (62.8)	1.661 (42.2)	M31x1-6g-0.100R
23	H	2.374 (60.2)	1.787 (45.4)	M34x1-6g-0.100R
25	J	2.494 (63.3)	1.909 (48.5)	M37x1-6g-0.100R

TABLE II: FINISH

SYM	FINISH
M	Electroless Nickel
Z1	CRES, Passivated
ZL	CRES, Electrodeposited Nickel
MT	Ni-PTFE *1000 Hour Grey™* (Nickel-Fluorocarbon Polymer)
NF	Cadmium O.D. Over Electroless Nickel
N	Cadmium O.D. Over Nickel Plate

© 2010 Glenair, Inc.

GLENAIR, INC. • 1211 AIR WAY • GLENDALE, CA 91201-2497 • 818-247-6000 • FAX 818-500-9912
www.glenair.com
E-Mail: sales@glenair.com

TABLE III: LANYARD LENGTH CODE							
CODE	L ± .236 (±6)	CODE	L ± .236 (±6)	CODE	L ± .236 (±6)	CODE	L ± .236 (±6)
A	4.016 (102)	G	7.007 (178)	M	10.000 (254)	U	13.031 (331)
B	4.527 (115)	H	7.519 (191)	N	10.511 (267)	V	14.015 (356)
C	5.000 (127)	I	7.992 (203)	P	11.023 (280)	W	15.000 (381)
D	5.511 (140)	J	8.503 (216)	R	11.535 (293)	X	16.023 (407)
E	6.024 (153)	K	9.015 (229)	S	12.007 (305)	Y	17.007 (432)
F	6.535 (166)	L	9.527 (242)	T	12.519 (318)	Z	18.031 (458)

TABLE IV: SEPARATION FORCES MAX		
SHELL SIZE	STRAIGHT PULL [NEWTON]	15 DEGREE PULL [NEWTON]
09	44.96 LBS [200]	55.08 LBS [245]
11	44.96 LBS [200]	55.08 LBS [245]
13	44.96 LBS [200]	55.08 LBS [245]
15	44.96 LBS [200]	55.08 LBS [245]
17	89.92 LBS [400]	100.04 LBS [445]
19	89.92 LBS [400]	100.04 LBS [445]
21	89.92 LBS [400]	100.04 LBS [445]
23	89.92 LBS [400]	100.04 LBS [445]
25	89.92 LBS [400]	100.04 LBS [445]

TABLE V: SUPPLIED COMPONENTS				
Contact Size	Contact Pin P/N	Contact Socket P/N	Sealing Plug P/N	Insert/Remove Tool P/N
22D	M39029/58-360	M39029/56-348	M27488-22	M81969/14-01
20	M39029/58-363	M39029/56-351	M27488-20	M81969/14-10
16	M39029/58-364	M39029/56-352	M27488-16	M81969/14-03
12	M39029/58-365	M39029/56-353	M27488-12	M81969/14-04
12	M39029/102-558 COAX	M39029/103-559 COAX	M27488-12	M81969/14-04
8	M39029/60-367 COAX	M39029/59-366 COAX	M27488-8	M81969/14-06
8	M39029/90-529 TWINAX	M39029/91-530 TWINAX	M27488-8	M81969/14-06

APPLICATION NOTES

1. Assembly to be identified with Glenair's name and part number.
2. Material/finishes:
   Shell, coupling sleeve, lanyard ring,
   Inner sleeve, lockring—al alloy or CRES/see Table II
   Contacts—copper alloy/gold plate (purchased separately)
   Insulators—high grade rigid dielectric/N.A.
   Seals—fluorosilicone/ N.A.
3. This connector mates with MIL-DTL-38999/20, /21, /23, /24, /25, and /27.
4. Dimensions in parenthesis are metric and for reference.
5. Blue color band indicates rear release retention system.
6. Dim B is clearance to accommodate AS85049 accessories.
7. For backshell extender consult factory.
8. Contacts, insertion/removal tools and sealing plugs are purchased separately. For more information please see catalog introduction.
9. Metric dimensions (mm) are indicated in parentheses.

© 2010 Glenair, Inc.

233-101-G6
Type 4 Lanyard Release Plug for MIL-STD-1760 and Other MIL-DTL-38999 Series III Type Hybrid Signal, Power, Coax and Twinax Arrangements

Product Series	Basic Number	EMI Plug	Finish *Table II*	Shell Size *Table I*	Insert Arrangement 25-20 Per MIL-STD-1560	Alternate Key Position *A, B, C, D or E (N for Normal)*	Lanyard Length Code *See Table III*
233 -	101 -	G6	M	25	20	P A	E

Contact Style
P - Pin
S - Socket

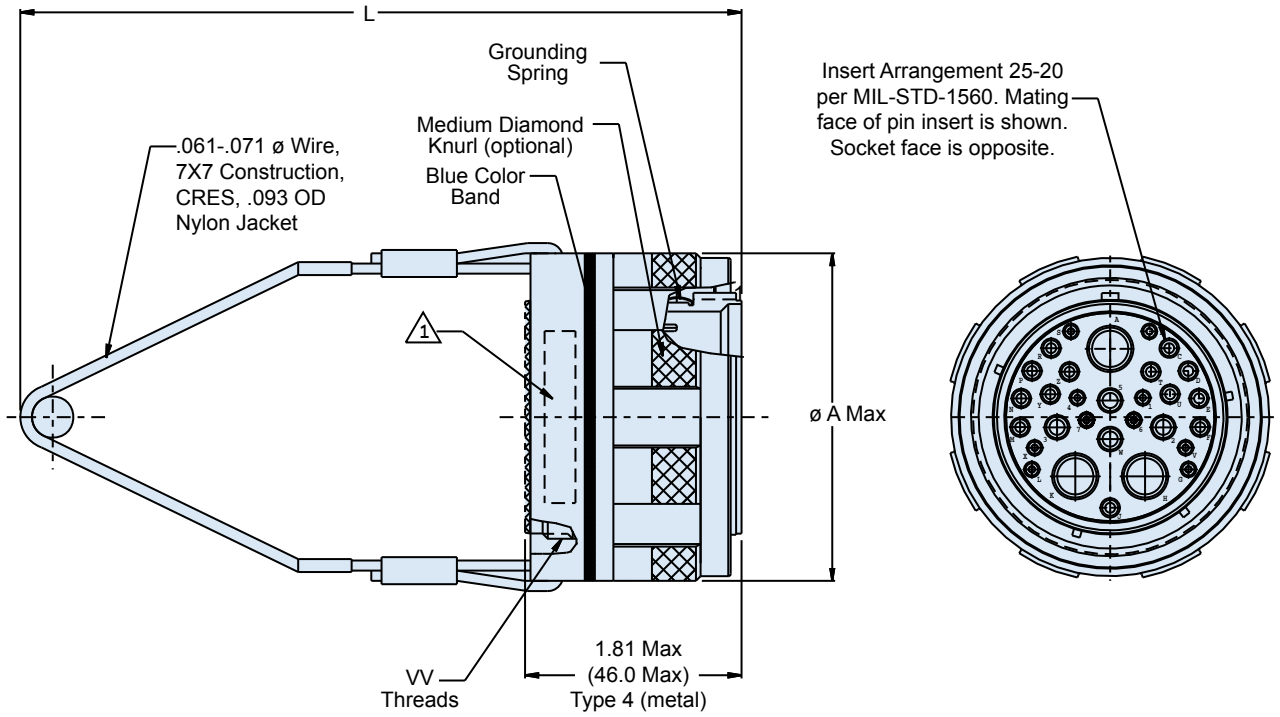

© 2010 Glenair, Inc.

GLENAIR, INC. • 1211 AIR WAY • GLENDALE, CA 91201-2497 • 818-247-6000 • FAX 818-500-9912
www.glenair.com E-Mail: sales@glenair.com

233-101-G6
Type 4 Lanyard Release Plug for MIL-STD-1760
and Other MIL-DTL-38999 Series III Type
Hybrid Signal, Power, Coax and Twinax Arrangements

Glenair®

TABLE I: CONNECTOR DIMENSIONS

SHELL SIZE	SHELL SIZE CODE	A MAX	W THREAD
09	A	1.00 (25.4)	M12 x1-6g-0.100R
11	B	1.110 (28.19)	M15 x1-6g-0.100R
13	C	1.972 (50.1)	M18x1-6g-0.100R
15	D	2.078 (52.8)	M22x1-6g-0.100R
17	E	2.204 (56.0)	M25x1-6g-0.100R
19	F	2.330 (59.2)	M28x1-6g-0.100R
21	G	2.472 (62.8)	M31x1-6g-0.100R
23	H	2.594 (65.9)	M34x1-6g-0.100R
25	J	2.704 (68.7)	M37x1-6g-0.100R

TABLE II: FINISH

Symbol	Finish
M	Al alloy, Electroless Nickel
Z1	CRES, Passivated
ZL	CRES, Electrodeposited Nickel
NF	Al alloy, Olive Drab Cadmium over Nickel

TABLE III: LANYARD LENGTH CODE

CODE	L ± .236 (±6)	CODE	L ± .236 (±6)	CODE	L ± .236 (±6)	CODE	L ± .236 (±6)
A	4.016(102)	G	7.007(178)	M	10.000(254)	U	13.031(331)
B	4.527(115)	H	7.519(191)	N	10.511(267)	V	14.015(356)
C	5.000(127)	I	7.992(203)	P	11.023(280)	W	15.000(381)
D	5.511(140)	J	8.503(216)	R	11.535(293)	X	16.023(407)
E	6.024(153)	K	9.015(229)	S	12.007(305)	Y	17.007(432)
F	6.535(166)	L	9.527(242)	T	12.519(318)	Z	18.031(458)

TABLE IV: SUPPLIED COMPONENTS

Contact Size	Contact Pin Part Number	Contat Socket Part Number	Sealing Plug Part Number	Insertion/Removal Tool Part Number
22D	M39029/58-360	M39029/56-348	M27488-22	M81969/14-01
20	M39029/58-363	M39029/56-351	M27488-20	M81969/14-10
16	M39029/58-364	M39029/56-352	M27488-16	M81969/14-03
12	M39029/58-365	M39029/56-353	M27488-12	M81969/14-04
12	M39029/102-558 Coax	M39029/103-559 Coax	M27488-12	M81969/14-04
8	M39029/60-367 Coax	M39029/59-366 Coax	M27488-8	M81969/14-06
8	M39029/90-529 Twinax	M39029/91-530 Twinax	M27488-8	M81969/14-06

APPLICATION NOTES

1. Assembly to be identified with Glenair's name and part number.
2. Material/finishes:
   Shell, coupling sleeve, lanyard ring—Aluminum alloy or CRES per Table I
   Retaining clips—Beryllium copper/gold plated
   Insulators—High grade rigid dielectric/NA
   Wave spring, retaining rings—Cres
   Grounding Spring—Beryllium copper/electroless nickel
   Seals—fluorosilicone/NA
3. This connector mates with D38999/20 and /24,
4. Dimensions in parenthesis are metric and for reference.
5. Blue color band indicates rear release retention system.
6. Connectors to be supplied with contacts, insertion/removal tools and sealing plugs. Quantity of contacts includes spares (see Table IV).

© 2010 Glenair, Inc. CAGE CODE 06324 Printed in U.S.A.

Glenair®

2570-1269
ARINC 828
MIL-DTL-38999 Series III Type
Quadrax Plug/Receptacle for EFB Standard

Basic Number

Connector Style
G6 - Plug
00 - Receptacle, Wall Mount with Slotted Holes

Insert Arrangement Dash No.

Alternate Key Position per MIL-DTL-38999
A, B, C, D, or E
N - Normal

2570 - 1269 NF 00 - 25Q - 17 B A

Material/Finish
M - Al/Electroless Nickel
NF - Al/O.D. Cadmium over Nickel
MT - Al/Nickel PTFE
XM - Composite/Electroless Nickel
XW - Composite/O.D. Cadmium over Nickel
XMT - Composite/Nickel PTFE

Shell Size

Insert Designator
A - Pin Insert (Less Contacts)
B - Socket Insert (Less Contacts)
S1 - Skt Contacts Included, See Table I
S2 - Skt Contacts Included, See Table I
P1 - Pin Contacts Included, See Table I
P2 - Pin Contacts Included, See Table I

FIGURE 1: INSERT ARRANGEMENTS

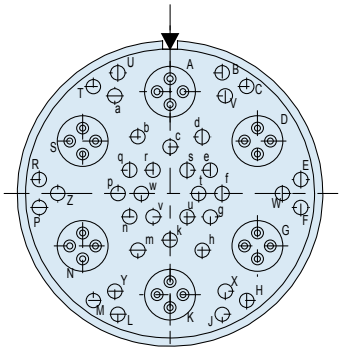

Arrangement 25Q-17
36 #22 Contacts
6 #8 Quadrax Contacts
(J2, J3, J4)

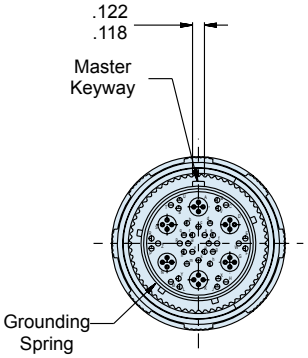

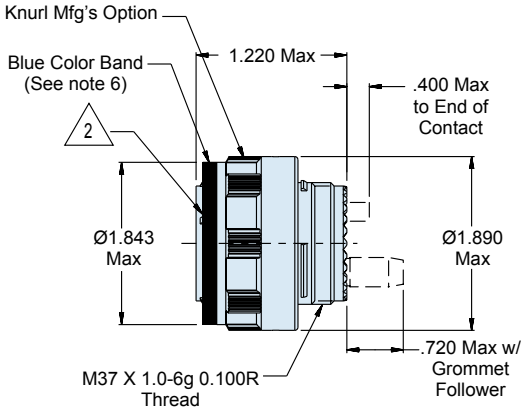

G6 - Plug

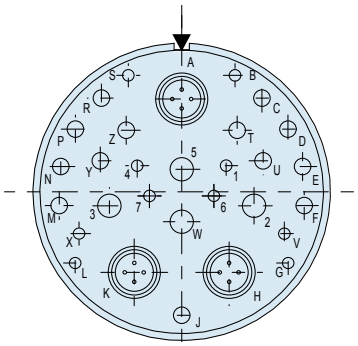

Arrangement 25Q-20
(IAW prEN 3645-001)
10 #20 Contacts
13 #16 Contacts
4 #12 Contacts
3 #8 QuadraxContacts
(J1)

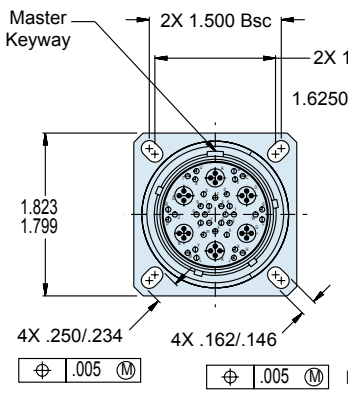

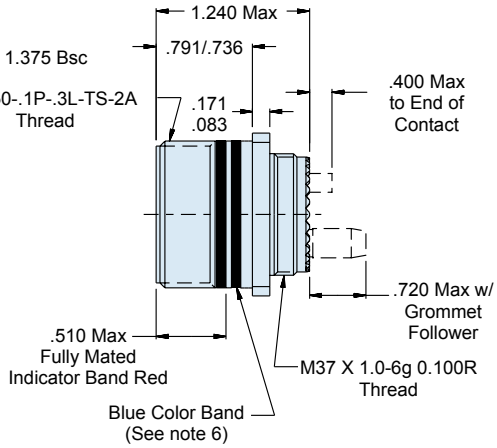

00-Wall Mount Receptacle
With Slotted Holes

© 2010 Glenair, Inc.

2570-1269
ARINC 828
MIL-DTL-38999 Series III Type
Quadrax Plug/Receptacle for EFB Standard

Table I: Cross-Reference to ARINC 828 Connectors (Wall Mount Receptacle

ARINC 828 (Recptacle)	Glenair Conn P/N (See Notes 3 and 4)	Quadrax Contact Socket P/N	Qty	Reference Cable Accommodated
J1	2570-1269M00-25Q-20BA	Not Supplied (To Be Ordered Separately. See Note 5)		
	2570-1269M00-25Q-20S1A	854-002-02F	3	PIC E51424;TENSOLITE NF24Q100; BMS 13-72T03C04G024*; ECS 422404*
	2570-1269M00-25Q-20S2A	854-002-04F	3	PIC E50424*; ABS 1503KD24*
J2	2570-1269M00-25Q-17BA	Not Supplied (To Be Ordered Separately. See Note 5)		
	2570-1269M00-25Q-17S1A	854-002-02F	6	PIC E51424;TENSOLITE NF24Q100; BMS 13-72T03C04G024*; ECS 422404*
	2570-1269M00-25Q-17S2A	854-002-04F	6	PIC E50424*; ABS 1503KD24*
J3	2570-1269M00-25Q-17BB	Not Supplied (To Be Ordered Separately. See Note 5)		
	2570-1269M00-25Q-17S1B	854-002-02F	6	PIC E51424;TENSOLITE NF24Q100; BMS 13-72T03C04G024*; ECS 422404*
	2570-1269M00-25Q-17S2B	854-002-04F	6	PIC E50424*; ABS 1503KD24*
J4	2570-1269M00-25Q-17BC	Not Supplied (To Be Ordered Separately. See Note 5)		
	2570-1269M00-25Q-17S1C	854-002-02F	6	PIC E51424;TENSOLITE NF24Q100; BMS 13-72T03C04G024*; ECS 422404*
	2570-1269M00-25Q-17S2C	854-002-04F	6	PIC E50424*; ABS 1503KD24*

Recommended Panel Mounting Holes (Receptacle)

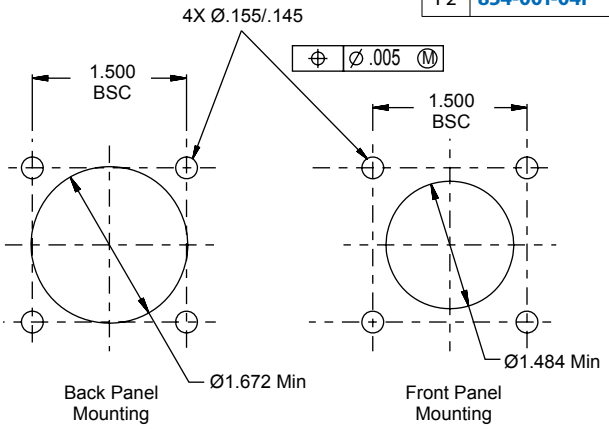

Table II: Quadrax Contact Pin P/N for Plug Connector

	Quadrax Contact Pin P/N	Reference Cable Accommodated
P1	854-001-02F	PIC E51424;TENSOLITE NF24Q100; BMS 13-72T03C04G024*; ECS 422404*
P2	854-001-04F	PIC E50424*; ABS 1503KD24*

Table III: Signal/Power Contact P/N (to be supplied w/ "P*" or "S*")

Pin/Socket	Contact Size	Contact P/N
Pin	22	M39029/58-360
	20	M39029/58-363
	16	M39029/58-364
	12	M39029/58-365
Socket	22	M39029/56-348
	20	M39029/56-351
	16	M39029/56-352
	12	M39029/56-353

APPLICATION NOTES

1. Material/Finishes:
   Receptacle, Barrel, Coupling Nut - See P/N Development
   Insulators - High Grade Rigid Dielectric
   Seals - Fluorosilicone
   Grounding Spring - BeCu Alloy
   Quadrax Contacts -
   Pin - See 854-001-XX (XX Denotes Cable Type, See Table II)
   Socket - See 854-002-XX (XX Denotes Cable Type, See Table I)
   Grommet Follower - 687-754-8-X
   Signal/Power Contacts - When insert designator is P* or S*, the Signal/Power contacts in Table III will be shipped with connector, as required, along with Quadrax contacts.
2. Insert arrangement is in accordance with MIL-STD-1560 and Figure 1
3. Common EFB connector material/finish IAW ARINC 828 is Al/ Electroless Nickel, code "M". Other material/finishes are also available, see P/N development for ordering.
4. All "J*" connectors, as defined in ARINC 828, are receptacles and their contacts are sockets. The mating plug connectors with pin contacts are not defined in the standard, and can be ordered as shown in P/N development.
5. Glenair connector is designed to accept Glenair Quadrax contacts only.
6. Blue color band indicates rear release system.

© 2010 Glenair, Inc. CAGE CODE 06324 Printed in U.S.A.

Glenair Twinax and Quadrax MIL-DTL-38999 Type Connectors

SECTION E TABLE OF CONTENTS

GLENAIR MIL-DTL-38999 TYPE TWINAX AND QUADRAX CONNECTORS:

MIL-DTL-38999 Type Twinax and Quadrax Connectors Product Features.....E-1

247-410 Metal or Composite Ground Plane Twinax Connector, 8 Ga.....E-2

257-411 Metal or Composite Twinax Receptacle Connector, Jam Nut Mount, 8 Ga.....E-4

257-414 (H) Metal or Composite Twinax Receptacle Connector, Box Mount, Standard Holes.....E-6

257-414 (S7) Metal or Composite Twinax Receptacle Connector, Box Mount, Slotted Holes.....E-7

257-414 (T7) Metal or Composite Twinax Receptacle Connector, Box Mount, Tapped Holes.....E-8

247-414 Metal or Composite Twinax Receptacle Connector Dimensions, Finish & Ground Plane..E-9

247-414 Metal or Composite Twinax Receptacle Connector Dimensions and Cut-Outs.....E-10

257-410, 257-411 and 257-414 Twinax Connector Insert Arrangements.....E-11

257-455 Box Mount QUadrax Connector with PC Tails.....E-12

257-459 Wall Mount Plug Quadrax Connector.....E-14

257-606 (00) Wall Mount Quadrax Receptacle Connector with Slotted Holes.....E-16

257-606 (G6) Quadrax Plug Connector.....E-17

257-606 (07) Jam Nut Mount Receptacle Connector.....E-18

257-606 Quadrax Connector Dimensions, Finish and Ground Plane.....E-19

257-606 Quadrax Connector Dimensions and Cut-Outs.....E-20

257-606 Quadrax Connector Insert Arrangements.....E-21

257-616 Twinax and Quadrax PC Tail Contacts.....E-22

854-001 and 854-002 Crimp Quadrax Pin and Socket Contacts.....E-23

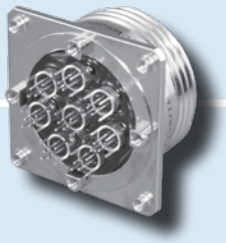

MIL-DTL-38999 Twinax and Quadrax Connector for Reliable High-Speed Applications

Product Applications

Glenair is recognized as trusted supplier of harsh environment electrical connectors built to the MIL-DTL-38999 standard. Both quadrax and twinax appear to have unique but equally beneficial qualities. The quadrax connector has four pins connected to a single cable, providing two-way Ethernet data communications. The twinax connector with two pins, provides one-way communication. Two twinax connectors and two wires are required for two-way communications which adds up to about 50% more weight than a quadrax connection. Twinax connectors have proven to be highly reliable and easy to maintain. Quadrax connectors are more difficult to maintain in the field and are yet to be thoroughly proven for reliability. Depending on the application, the end user will prefer one or the other (for example, Airbus prefers Quadrax while Boeing prefers twinax) which is why Glenair offers both.

Available Insert Arrangements

Based on industry-standard specifications, Glenair's MIL-DTL-38999 derivative environmental class connector systems are supplied with insert arrangements IAW MIL-STD-1560, or appropriate sub-sets depending on connector series. Consult factory for available insert arrangements.

Errata

Catalog contents—including part numbers, materials and dimensions—are accurate to the best of our ability when we go to print. When errors or mistakes are brought to our attention, corrected content is posted immediately to www.glenair.com.

E

Same-Day Delivery on Many Common Shell Styles and Layouts

Selected Range of D38999 Series I thru III Pin and Socket Insert Arrangements–Consult Factory for Availability

Lightweight, Corrosion-Free Composite Versions

Special Lanyard-Release Versions

All Standard Material Options, Including Stainless Steel

Jam Nut, Solder Mount, Wall Mount and Box Mount Options

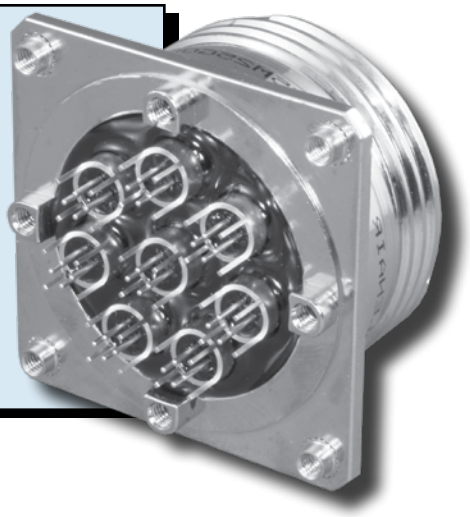

© 2010 Glenair, Inc. CAGE CODE 06324 Printed in U.S.A.

257-410
Metal or Composite Ground Plane Twinax Connector
8GA • MIL-DTL-38999 Series III Type

Basic Part Number
257-410 - D38999 Series III Type Twinax Connector

Finish Material
(See Table II)

Ground Plane Option
G = Outer Contacts Grounded to Shell
— = Standard Insulated Contacts

Shell Size

Insert Designator
P = Pin Insert
S = Socket
A = Less Pin Contacts/ Grommet Followers
B = Less Socket Contacts/ Grommet Followers

257-410 XM 06 - 25 - G 08 P N

Connector Style
06 = Plug

Insert Arrangement Dash Number
(See Page D-37)

Alternate Key Position
A, B, C, D, or E (N for Normal)

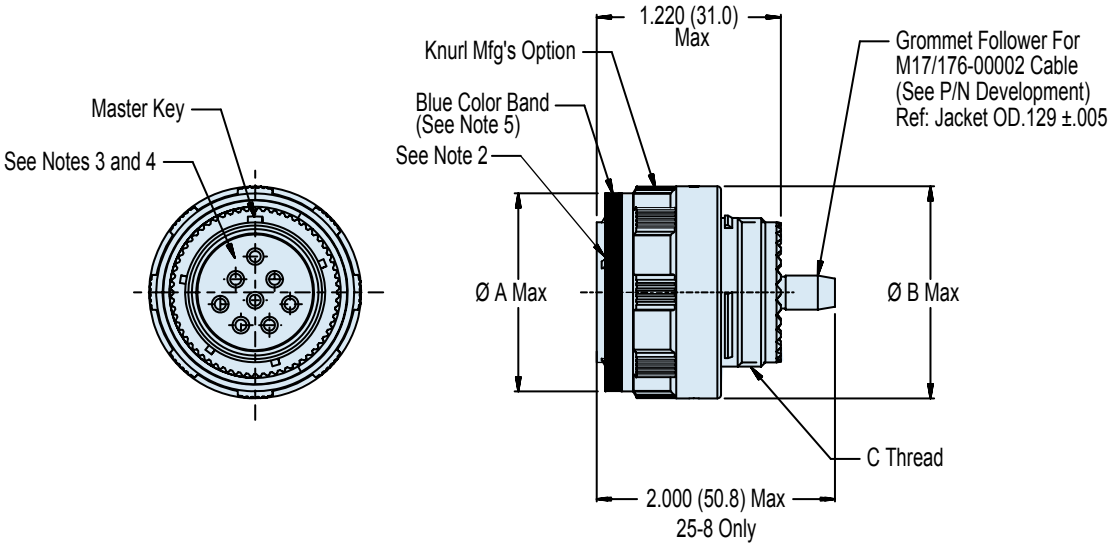

APPLICATION NOTES

1. Material/Finishes:
   Plug barrel/Coupling nut - See Table II. (Composite coupling is unplated).
   Insulator - Aluminum alloy/Conductive plate or high-grade thermoplastic.
   Contact retainer clips - HT BeCu/Conductive plate.
   Seals - Fluorosilicone/N.A.
2. Assembly to be identified with Glenair's name, partnumber and date code, space permitting.
3. Insert arrangements are in accordance with MIL-STD-1560 (See page D-37).
4. Insert arrangement shown is for reference only.
5. Blue color band indicates rear release retention system.
6. Ground plane performance: per Table II, between outer contact and plug barrel (see part number development).
7. For P and S, plug is supplied with contacts P/N M39029/90-529 (Pin) or M39029/91-530 (Socket) and Grommet Follower P/N 687-643-8-1 (No spares/sealing plugs provided).
8. Metric dimensions (mm)are in parentheses.

© 2010 Glenair, Inc. CAGE CODE 06324 Printed in U.S.A.

257-410
Metal or Composite Ground Plane Twinax Connector
8GA • MIL-DTL-38999 Series III Type

TABLE I: SHELL SIZE			
Shell Size	**A Dia Max**	**B Dia Max**	**C Thread**
09	.811 (20.6)	.858 (21.8)	M12 x 1.0-6g 0.100R
21	1.594 (40.5)	1.642 (41.7)	M31 x 1.0-6g 0.100R
23	1.720 (43.7)	1.768 (44.9)	M34 x 1.0-6g 0.100R
25	1.843 (46.8)	1.890 (48.0)	M37 x 1.0-6g 0.100R

TABLE II: MATERIAL/FINISH and GROUND PLANE			
Sym	**Material**	**Finish**	**Ground Plane**
M	Aluminum	Electroless Nickel	**1 mV**
NF		Cadmium O.D. Over Electroless Nickel	**2.5 mV**
XM	Composite	Electroless Nickel	**3.0 mV**
XW		Cadmium O.D. over Electroless Nickel	**3.0 mV**

Consult Factory for Additional Plating Options

© 2010 Glenair, Inc. CAGE CODE 06324 Printed in U.S.A.

257-411
Twinax Receptacle Connector
Jam Nut Mount • Metal or Composite
Ground Plane • 8GA • MIL-DTL-38999 Series III Type

Basic Part Number
257-411 = D38999 Series III Type Twinax Connector

Finish Material
(See Table II)

Ground Plane Option
G = Outer Contacts Grounded to Shell
— = Standard Insulated Contacts

Shell Size

Insert Designator
P = Pin Insert
S = Socket
A = Less Pin Contacts/ Grommet Followers
B = Less Socket Contacts/ Grommet Followers

257-411	XM	08	-	25	-	G	8	P	N

Connector Style
08 = Receptacle, Jam Nut

Insert Arrangement Dash Number
(See Page D-37)

Alternate Key Position
A, B, C, D, or E
(N for Normal)

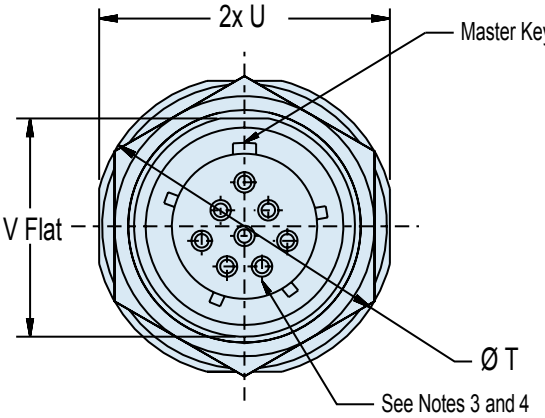

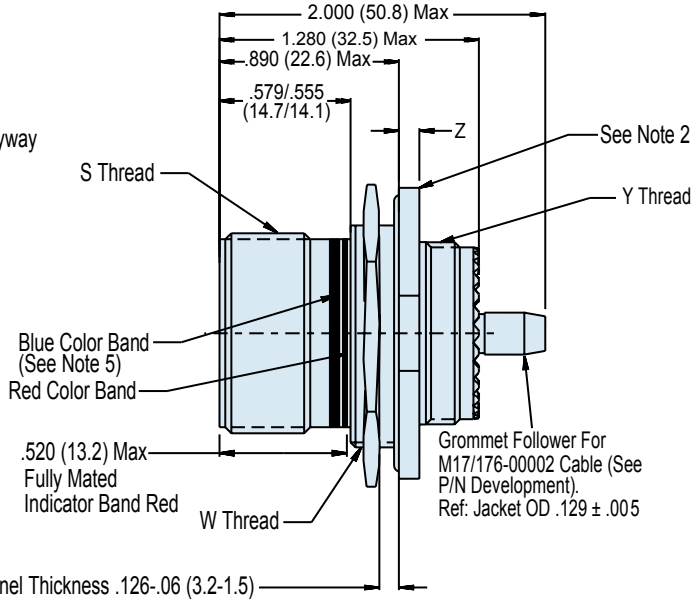

APPLICATION NOTES

1. Material/Finishes:
   Receptacle and Jam Nut - See Table II.
   (Composite coupling is unplated).
   Insulators - Aluminum alloy/Conductive plate or high-grade thermoplastic.
   Contact retainer clips - HT BeCu/Conductive plate.
   Seals - Fluorosilicone/N.A.
2. Assembly to be identified with Glenair's name, partnumber and date code, space permitting.
3. Insert arrangements are in accordance with MIL-STD-1560 (See page D-37).
4. Insert arrangement shown is for reference only.
5. Blue color band indicates rear release retention system.
6. Ground plane performance: per Table II, between outer contact and plug barrel (see part number development).
7. For P and S, receptacle is supplied with contacts P/N M39029/90-529 (Pin) or M39029/91-530 (Socket) and Grommet Follower P/N 687-643-8-1 (No spares/sealing plugs provided).
8. Metric dimensions (mm)are in parentheses.

© 2010 Glenair, Inc. CAGE CODE 06324 Printed in U.S.A.

257-411
Twinax Receptacle Connector
Jam Nut Mount • Metal or Composite
Ground Plane • 8GA • MIL-DTL-38999 Series III Type

TABLE I: MATERIAL/FINISH and GROUND PLANE			
Sym	**Material**	**Finish**	**Ground Plane**
M	Aluminum	Electroless Nickel	**1 mV**
NF		Cadmium O.D. Over Electroless Nickel	**2.5 mV**
XM	Composite	Electroless Nickel	**3.0 mV**
XW		Cadmium O.D. over Electroless Nickel	**3.0 mV**

Consult Factory for Additional Plating Options

TABLE II: JAM NUT MOUNT							
Shell Size	**S Thread**	**T Dia**	**U**	**V**	**W Thread**	**Y Thread**	**Z**
9	.6250-.1P-.3L-TS2A	1.201 (30.5) 1.177 (44.9)	1.079 (27.4) 1.047 (26.6)	.655 (16.6) .645 (16.4)	M17 x 1.0-6g 0.100R	M12 x 1.0-6g 0.100R	.122 (3.1) .083 (2.1)
21	1.3750-.1P-.3L-TS-2A	2.075 (52.7) 2.051 (52.1)	1.953 (49.6) 1.921 (48.8)	1.441 (36.6) 1.431 (36.3)	M38 x 1.0-6g 0.100R	M31 x 1.0-6g 0.100R	.153 (3.9) .114 (2.9)
23	1.5000-.1P-.3L-TS-2A	2.201 (55.9) 2.177 (55.3)	2.079 (52.8) 2.047 (52.0)	1.566 (39.8) 1.556 (39.5)	M41 x 1.0-6g 0.100R	M34 x 1.0-6g 0.100R	
25	1.6250-.1P-.3L-TS-2A	2.323 (59.0) 2.299 (58.4)	2.205 (56.0) 2.173 (55.2)	1.691 (43.0) 1.681 (42.7)	M44 x 1.0-6g 0.100R	M37 x 1.0-6g 0.100R	

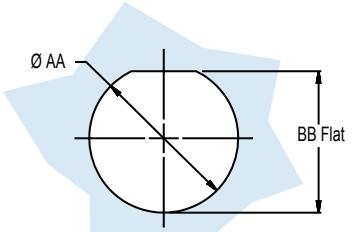

RECOMMENDED PANEL CUT OUT
(See Table III)

TABLE III: CUT-OUT		
Shell Size	**AA Dia Max**	**BB**
09	.710 (18.0) .700 (17.8)	.670 (17.0) .660 (16.8)
21	1.520 (38.6) 1.510 (38.4)	1.460 (37.1) 1.450 (36.8)
23	1.645 (41.8) 1.635 (41.5)	1.585 (40.3) 1.575 (40.0)
25	1.770 (45.0) 1.760 (44.7)	1.710 (43.4) 1.700 (43.2)

© 2010 Glenair, Inc. CAGE CODE 06324 Printed in U.S.A.

257-414 (H7)
Metal or Composite Twinax Receptacle Connector
Box Mount with Standard Holes
Ground Plane • 8GA • MIL-DTL-38999 Series III Type

Basic Part Number
257-414 = D38999 Series III Type Twinax Connector

Finish Material
(See Table II)

Ground Plane Option
G = Outer Contacts Grounded to Shell
— = Standard Insulated Contacts

Shell Size

Insert Designator
P = Pin Insert
S = Socket
A = Less Pin Contacts/ Grommet Followers
B = Less Socket Contacts/ Grommet Followers

257-414 XM H7 - 25 - G 8 P N

Connector Style
H7 = Wall Mount, Standard Holes

Insert Arrangement Dash Number
(See Page D-37)

Alternate Key Position
A, B, C, D, or E (N for Normal)

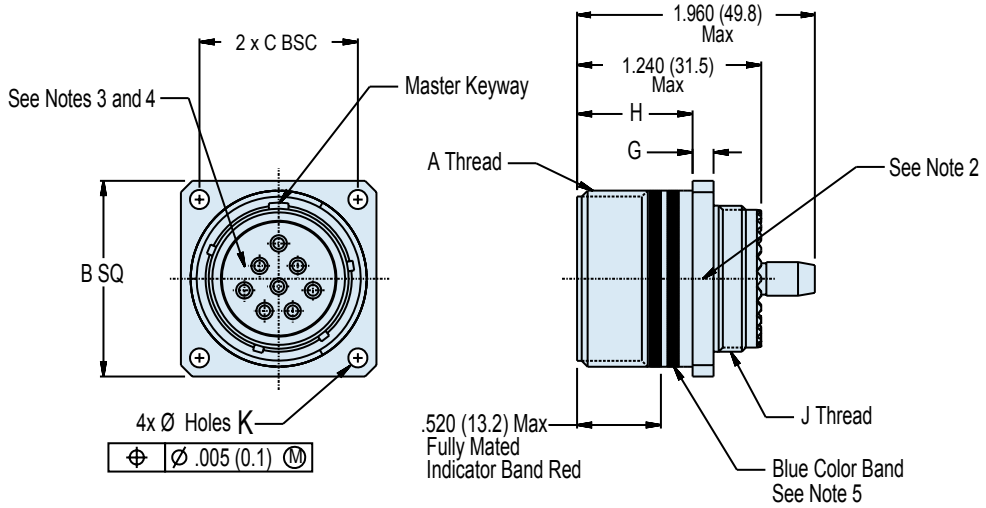

APPLICATION NOTES

1. Material/Finishes:
   Receptacle and Jam Nut - See Table II.
   (Composite coupling is unplated).
   Insulators - Aluminum alloy/Conductive plate or high-grade thermoplastic.
   Contact retainer clips - HT BeCu/Conductive plate.
   Seals - Fluorosilicone/N.A.
2. Assembly to be identified with Glenair's name, partnumber and date code, space permitting.
3. Insert arrangements are in accordance with MIL-STD-1560 (See page D-37).
4. Insert arrangement shown is for reference only.
5. Blue color band indicates rear release retention system.
6. Ground plane performance: per Table II, between outer contact and plug barrel (see part number development).
7. For P and S, receptacle is supplied with contacts P/N M39029/90-529 (Pin) or M39029/91-530 (Socket) and Grommet Follower P/N 687-643-8-1 (No spares/sealing plugs provided).
8. Metric dimensions (mm)are in parentheses.

© 2010 Glenair, Inc. CAGE CODE 06324 Printed in U.S.A.

257-414 (S7)
Metal or Composite Twinax Receptacle Connector
Box Mount with Slotted Holes
Ground Plane • 8GA • MIL-DTL-38999 Series III Type

Basic Part Number
257-414 = D38999 Series III Type Twinax Connector

Finish Material
(See Table II)

Ground Plane Option
G = Outer Contacts Grounded to Shell
— = Standard Insulated Contacts

Shell Size

Insert Designator
P = Pin Insert
S = Socket
A = Less Pin Contacts/ Grommet Followers
B = Less Socket Contacts/ Grommet Followers

257-414 XM S7 - 25 - G 8 P N

Connector Style
S7 = Wall Mount, Slotted Holes

Insert Arrangement Dash Number
(See Page D-37)

Alternate Key Position
A, B, C, D, or E (N for Normal)

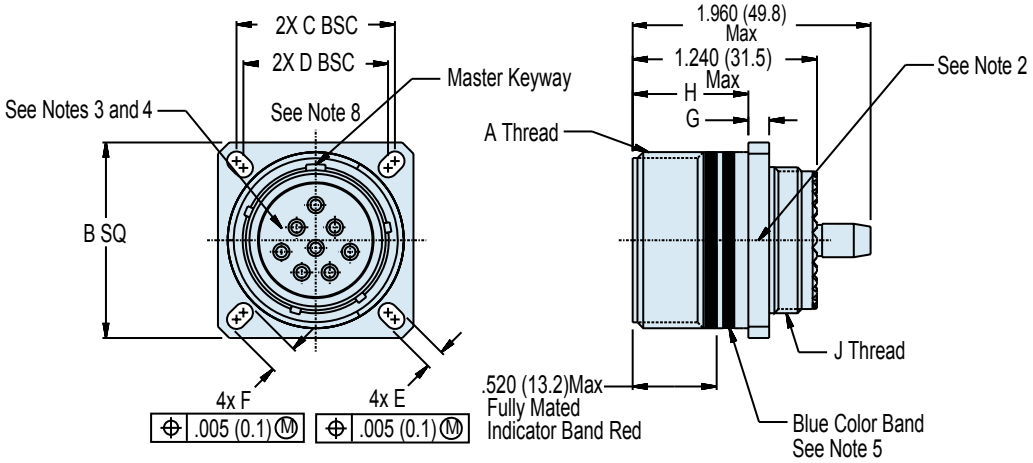

APPLICATION NOTES

1. Material/Finishes:
   Receptacle and Jam Nut - See Table II.
   (Composite coupling is unplated).
   Insulators - Aluminum alloy/Conductive plate or high-grade thermoplastic.
   Contact retainer clips - HT BeCu/Conductive plate.
   Seals - Fluorosilicone/N.A.
2. Assembly to be identified with Glenair's name, partnumber and date code, space permitting.
3. Insert arrangements are in accordance with MIL-STD-1560 (See page D-37).
4. Insert arrangement shown is for reference only.
5. Blue color band indicates rear release retention system.
6. Ground plane performance: per Table II, between outer contact and plug barrel (see part number development).
7. For P and S, receptacle is supplied with contacts P/N M39029/90-529 (Pin) or M39029/91-530 (Socket) and Grommet Follower P/N 687-643-8-1 (No spares/sealing plugs provided).
8. Metric dimensions (mm)are in parentheses.

© 2010 Glenair, Inc. CAGE CODE 06324 Printed in U.S.A.

GLENAIR, INC. • 1211 AIR WAY • GLENDALE, CA 91201-2497 • 818-247-6000 • FAX 818-500-9912
www.glenair.com E-Mail: sales@glenair.com

257-414 (T7)
Metal or Composite Twinax Receptacle Connector
Box Mount with Tapped Holes
Ground Plane • 8GA • MIL-DTL-38999 Series III Type

Basic Part Number
257-414 = D38999 Series III Type Twinax Connector

Finish Material
(See Table II)

Ground Plane Option
G = Outer Contacts Grounded to Shell
— = Standard Insulated Contacts

Shell Size

Insert Designator
P = Pin Insert
S = Socket
A = Less Pin Contacts/ Grommet Followers
B = Less Socket Contacts/ Grommet Followers

257-414 XM T7 - 25 - G 8 P N

Connector Style
T7 = Wall Mount, Tapped Holes

Insert Arrangement Dash Number
(See Page D-37)

Alternate Key Position
A, B, C, D, or E (N for Normal)

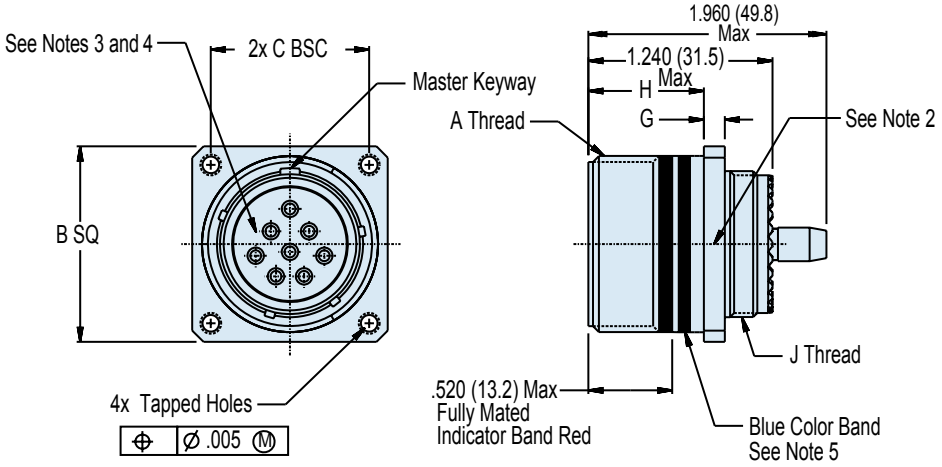

APPLICATION NOTES

1. Material/Finishes:
   Receptacle and Jam Nut - See Table II.
   (Composite coupling is unplated).
   Insulators - Aluminum alloy/Conductive plate or high-grade thermoplastic.
   Contact retainer clips - HT BeCu/Conductive plate.
   Seals - Fluorosilicone/N.A.
2. Assembly to be identified with Glenair's name, partnumber and date code, space permitting.
3. Insert arrangements are in accordance with MIL-STD-1560 (See page D-37).
4. Insert arrangement shown is for reference only.
5. Blue color band indicates rear release retention system.
6. Ground plane performance: per Table II, between outer contact and plug barrel (see part number development).
7. For P and S, receptacle is supplied with contacts P/N M39029/90-529 (Pin) or M39029/91-530 (Socket) and Grommet Follower P/N 687-643-8-1 (No spares/sealing plugs provided).
8. Metric dimensions (mm)are in parentheses.

© 2010 Glenair, Inc. CAGE CODE 06324 Printed in U.S.A.

257-414
Metal or Composite Twinax Receptacle Connector
Dimensions, Finish, Material and Ground Plane
8GA • MIL-DTL-38999 Series III Type

TABLE I: SHELL SIZE AND DIMENSIONS (Continued on following page)

Shell Size	A Thread	B SQ	C BSC	D BSC *(See Note 8)*	E	F	G	H
9	.6250-.1P-.3L-TS-2A	.949 (24.1) .925 (23.5)	.719 (18.3)	.626 (15.9)	.136 (3.45) .120 (3.0)	.224 (5.7) .208 (5.3)	.144 (3.7) .083 (2.1)	.823 (20.9) .768 (19.5)
21	1.3750-.1P-.3L-TS-2A	1.575 (40.0) 1.551 (39.4)	1.156 (29.4)	1.125 (28.6)		.202 (5.1) .186 (4.7)	.171 (4.3) .083 (2.1)	.791 (20.1) .736 (18.5)
23	1.5000-.1P-.3L-TS-2A	1.701 (43.2) 1.677 (42.6)	1.375 (34.9)	1.250 (31.8)	.162 (4.1) .146 (3.7)	.250 (6.4) .234 (5.9)		
25	1.6250-.1P-.3L-TS-2A	1.823 (46.3) 1.799 (45.7)	1.500 (38.1)	1.375 (34.9)				

TABLE II: MATERIAL/FINISH and GROUND PLANE

Sym	Material	Finish	Ground Plane
M	Aluminum	Electroless Nickel	**1 mV**
NF		Cadmium O.D. Over Electroless Nickel	**2.5 mV**
XM	Composite	Electroless Nickel	**3.0 mV**
XW		Cadmium O.D. over Electroless Nickel	**3.0 mV**

Consult Factory for Additional Plating Options

© 2010 Glenair, Inc. CAGE CODE 06324 Printed in U.S.A.

257-414
Metal or Composite Twinax Receptacle Connector
Dimensions and Cut-Outs
8GA • MIL-DTL-38999 Series III Type

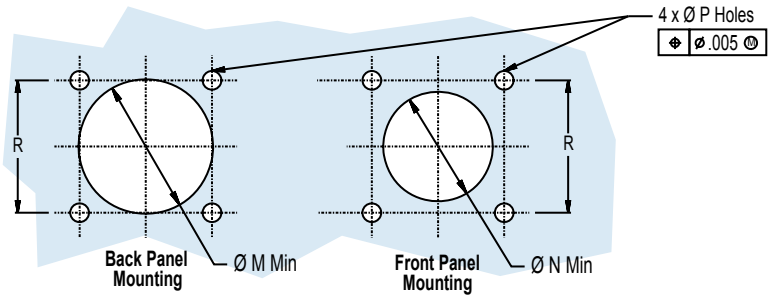

Recommended Mounting For Wall Mount Receptacles, See Table II

TABLE I: SHELL SIZE AND CUT-OUT DIMESIONS (Table continued from preceding page)

Shell Size	J Thread	K Dia	L Tapped Holes	M Dia Min	N Dia Min	P Holes	R BSC
9	M12 x 1.0-6g 0.100R	.136 (3.5) .120 (3.0)	.112-40 UNC-2B	.656 (16.7)	.516 (13.1)	.133 (8.4) .123 (3.1)	.719 (18.3)
21	M31 x 1.0-6g 0.100R			1.422 (36.1)	1.266 (32.2)		1.250 (31.8)
23	M34 x 1.0-6g 0.100R	.162 (4.1) .146 (3.7)	.138-32 UNC-2B	1.547 (39.3)	1.375 (34.9)	.159 (4.0) .149 (3.8)	1.375 (34.9)
25	M37 x 1.0-6g 0.100R			1.672 (42.5)	1.484 (37.7)	.155 (3.9) .145 (3.7)	1.500 (38.1)

© 2010 Glenair, Inc. CAGE CODE 06324 Printed in U.S.A.

MIL-DTL-38999 Series III Type
257-410, 257-41I and 257-414 Twinax Connectors
Insert Arrangements (IAW MIL-STD-1560)

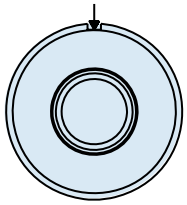

ARRANGEMENT 09-05

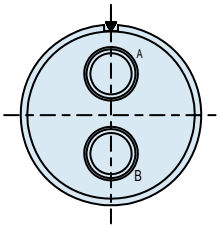

ARRANGEMENT 17-75

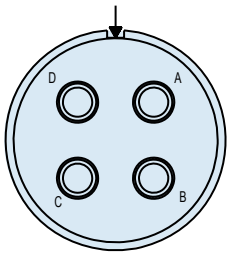

ARRANGEMENT 21-75

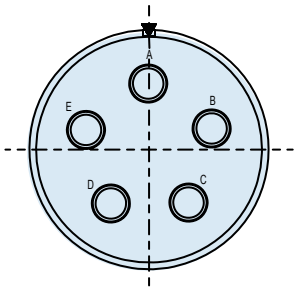

ARRANGEMENT 23-05

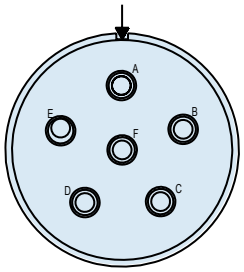

ARRANGEMENT 23-06

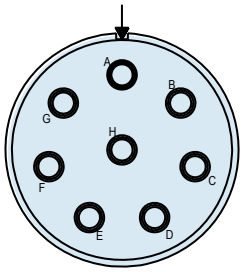

ARRANGEMENT 25-08

Mating Face of Pin Insert Shown

© 2010 Glenair, Inc.

GLENAIR, INC. • 1211 AIR WAY • GLENDALE, CA 91201-2497 • 818-247-6000 • FAX 818-500-9912
www.glenair.com
E-Mail: sales@glenair.com

257-455
Box Mount Quadrax Connector
With PC Tails • MIL-DTL-38999 Series III Type

Basic Number

Finish
M - Electroless Nickel
NF - O.D. Cadmium over Nickel

Shell Size
09
21
23
25

Contact Style
P - Pin, PC Tail Quadrax (100 Ohm)
S - Socket, PC Tail Quadrax (100 Ohm)
C - Pin, PC Tail Quadrax (150 Ohm)
D - Socket, PC Tail Quadrax (150 Ohm)

Alternate Key Position
A, B, C, D, E
(*N* = Normal)

257 - 455 M 21 G 75 P N

G = Ground Plane Option
(use "–" for none)

Insert Arrangement
(See Opposite Page)

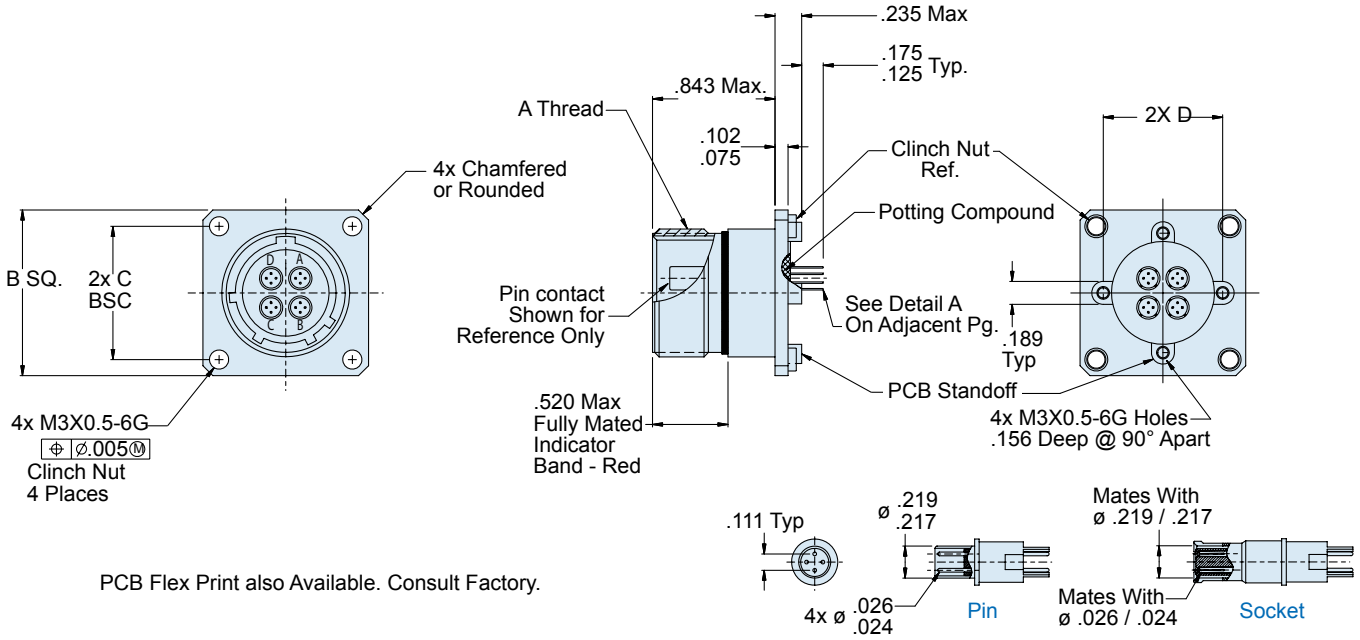

PCB Flex Print also Available. Consult Factory.

APPLICATION NOTES

1. Assembly identified with Glenair's, part number and date code
2. Insert arrangements IAW MIL-STD-1560 and Figure I
3. Glenair 257-455 receptacle connector is designed to mate with any QPL manufacturers MIL-C-38999 series III plug connector having the same insert arrangement, polarization and the same quadrax interface dimensions shown.
4. PC contacts supplied with connector (installed) and are not sold seperately.
5. Material/finish:
   Shell assembly, jam nut, lock ring—Al alloy/see Table II
   Contacts—copper alloy/gold plate
   Bayonet pins—CRES/passivate
   0-rings, interfacial & peripheral seals—silicone/N.A.
   Insulators—high grade rigid dielectric/ N.A.
6. Metric Dimensions (mm) are indicated in parentheses

© 2010 Glenair, Inc. CAGE CODE 06324 Printed in U.S.A.

257-455
Box Mount Quadrax Connector
With PC Tails • MIL-DTL-38999 Series III Type

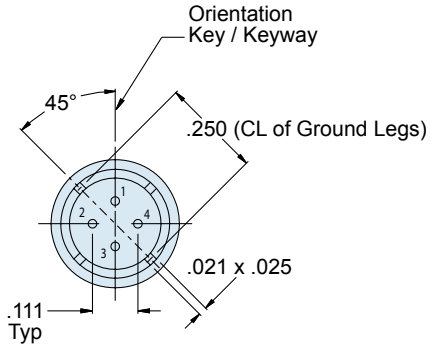

Rear View of Differential Quadrax

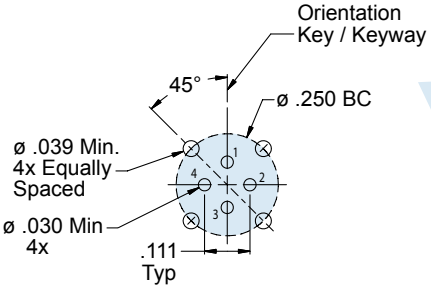

Recommended PCB Layout

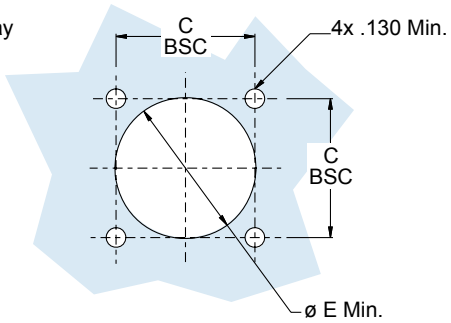

Back Panel Mounting

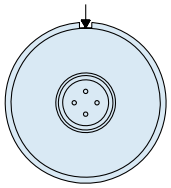

Arrangement 09-5

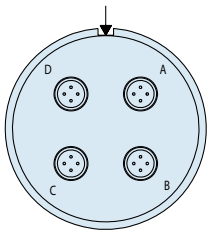

Arrangement 21-75

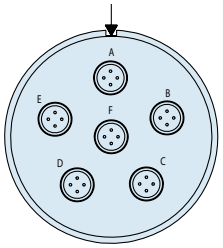

Arrangement 23-06

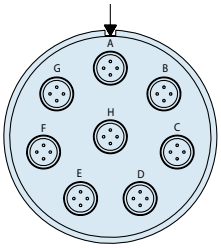

Arrangement 25-08

See Quadrax Contact Information on D-24

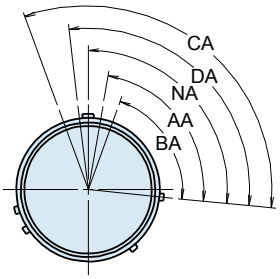

Figure 1
Master Keyway Position
Face View Shown
Insert Arrangement Does
Not Rotate With Master Keyway

TABLE I

Shell Size	A Thread	B Sq.	C Bsc.	D Bsc.	ø E Min.
09	.6250-.1P-.3L-TS-2A	1.031 1.007	.719	.594	.656
21	1.3750 -.1P-.3L-TS-2A	1.575 1.545	1.250	1.221	1.421
23	1.5000 -.1P-.3L-TS-2A	1.701 1.677	1.375	1.360	1.546
25	1.6250 -.1P-.3L-TS-2A	1.823 1.799	1.500	1.475	1.672

© 2010 Glenair, Inc.

GLENAIR, INC. • 1211 AIR WAY • GLENDALE, CA 91201-2497 • 818-247-6000 • FAX 818-500-9912
www.glenair.com
E-Mail: sales@glenair.com

257-459 (06) or (S7)
Plug or Wall Mount Receptacle Quadrax Connector
MIL-DTL-38999 Series III Type

Basic Number

Finish
M - Electroless Nickel
NF - O.D. Cadmium over Nickel

Shell Size
09
21
23
25

Insert Arrangement
(See Opposite Page)

Contact Style
*P - Pin insert (less contacts)**
*S - Socket insert (less contacts)**

257 - 459	NF	06	-	25	G	8	P	N

Connector Style
06 - Plug
S7 - Receptacle, wall mount w/ slotted holes

G = Ground Plane Option
(use "–" for none)

Alternate Key Position
A, B, C, D, E
(*N* = Normal)

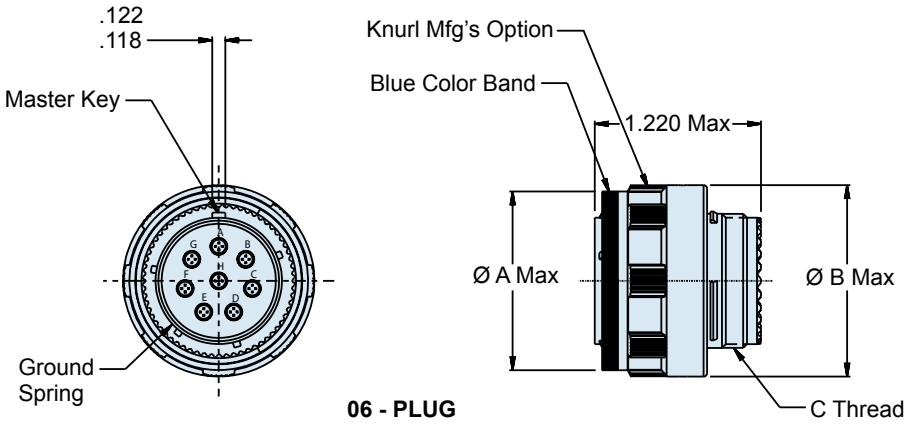

06 - PLUG

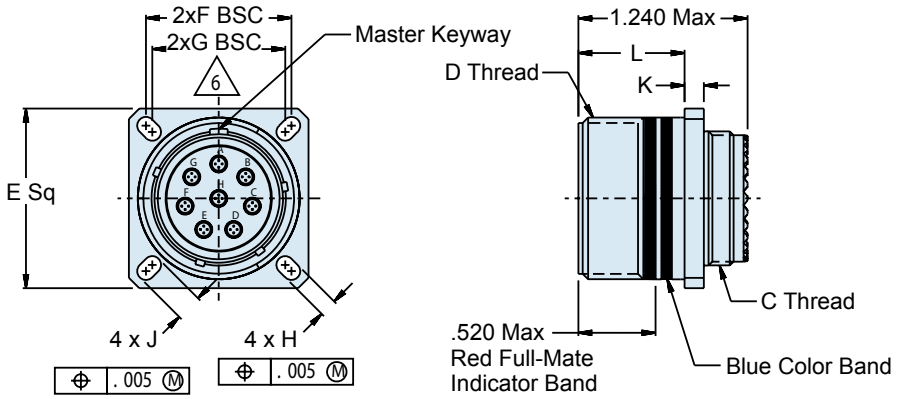

S7 - WALL MOUNT RECEPTACLE

© 2010 Glenair, Inc.

GLENAIR, INC. • 1211 AIR WAY • GLENDALE, CA 91201-2497 • 818-247-6000 • FAX 818-500-9912
www.glenair.com
E-Mail: sales@glenair.com

257-459 (06) or (S7)
Plug or Wall Mount Receptacle Quadrax Connector
MIL-DTL-38999 Series III Type

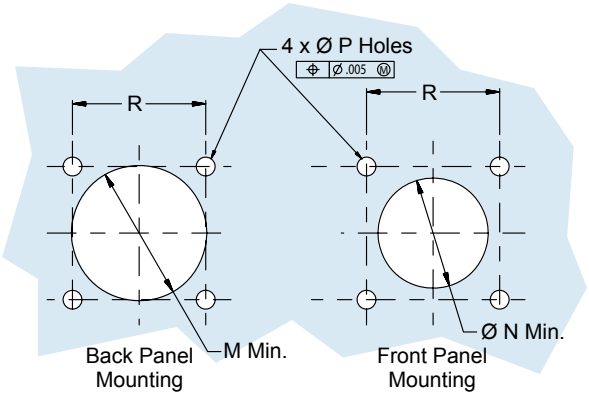

TABLE I				
Shell Size Code	Shell Size	ø A Max.	ø B Max.	C Thread
A	09	.732	.858	M12 x 1.0-g 0.100R
G	21	1.508	1.642	M31 x 1.0-g 0.100R
H	23	1.626	1.768	M34 x 1.0-g 0.100R
J	25	1.752	1.890	M37 x 1.0-g 0.100R

TABLE II: WALL MOUNT									
Shell Size Code	Shell Size	D Thread	E Sq.	F BSC	G BSC	H	J	K	L
A	09	.6250-.1P-.3L-TS-2A	.949 .925	.719	.626	.136 .120	.224 .208	.144 .083	.823 .768
G	21	1.3750-.1P-.3L-TS-2A	1.575 1.551	1.250	1.156		.202 .186	.171 .083	.791 .736
H	23	1.5000-.1P-.3L-TS-2A	1.701 1.667	1.375	1.250	.162 .146	.250 .234		
J	25	1.6250-.1P-.3L-TS-2A	1.823 1.799	1.500	1.375				

TABLE III					
Shell Size Code	Shell Size	ø M Min.	ø N Min.	P Holes	R BSC
A	09	.656	.516	.133 .123	.719
G	21	1.422	1.266		1.250
H	23	1.547	1.375	.159 .149	1.375
J	25	1.672	1.484	.155 .145	1.500

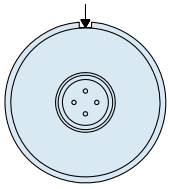

Arrangement 09-5

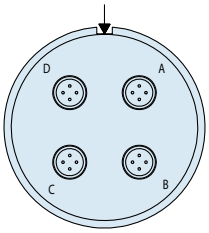

Arrangement 21-75

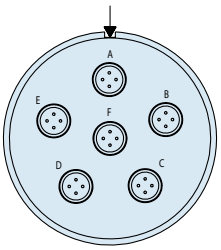

Arrangement 23-06

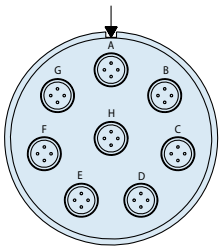

Arrangement 25-08

© 2010 Glenair, Inc. CAGE CODE 06324 Printed in U.S.A.

257-606 (00)
Wall Mount Quadrax Receptacle Connector
with Slotted Holes • MIL-DTL-38999 Series III Type

Basic Part Number
257-606 = D38999 Series III Type Quadrax Connector

Finish/Material
(See Table II)

Shell Size

Ground Plane Option
G = Outer Contacts Grounded to Shell
— = None

Insert Designator
A = Pin Insert (Less Contacts)
B = Socket Insert (Less Contacts
(See Note 7)

257-606 NF 00 - 25Q - G 08 A N

Connector Style
00 = Wall Mount, Slotted Holes

Insert Arrangement Dash Number
(See Note 3)

Alternate Key Position
A, B, C, D, or E
(N for Normal)

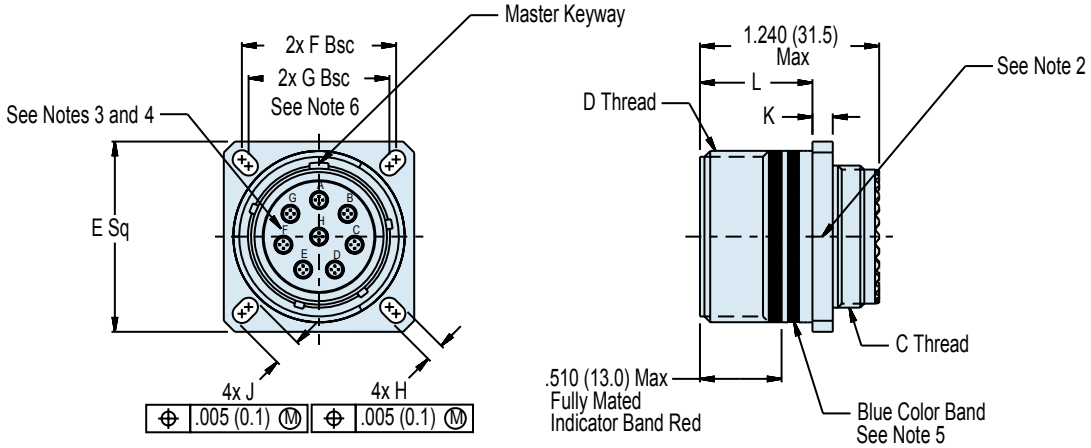

00-Wall Mount Receptacle With Slotted Holes
(See Table I)

APPLICATION NOTES

1. Material/Finish (See Table II).
2. Assembly identified with Glenair's, part number and date code
3. Insert arrangements IAW MIL-STD-1560 and Figure 1.
4. Insert arrangements shown is for reference only.
5. Blue color band indicates rear release retention system.
6. Front panel mount only.
7. Parts will be identified "A" or "B."

© 2010 Glenair, Inc.

257-606 (G6)
Quadrax Plug Connector
MIL-DTL-38999 Series III Type

Basic Part Number
257-606 = *D38999 Series III Type Quadrax Connector*

Finish/Material
(See Table II)

Ground Plane Option
G = *Outer Contacts Grounded to Shell*
— = *None*

Shell Size

Insert Designator
A = *Pin Insert (Less Contacts)*
B = *Socket Insert (Less Contacts*
(See Note 7)

257-606 NF G6 - 25Q - G 08 A N

Connector Style
G6 = *Plug*

Insert Arrangement Dash Number
(See Note 3)

Alternate Key Position
A, B, C, D, or E
(N for Normal)

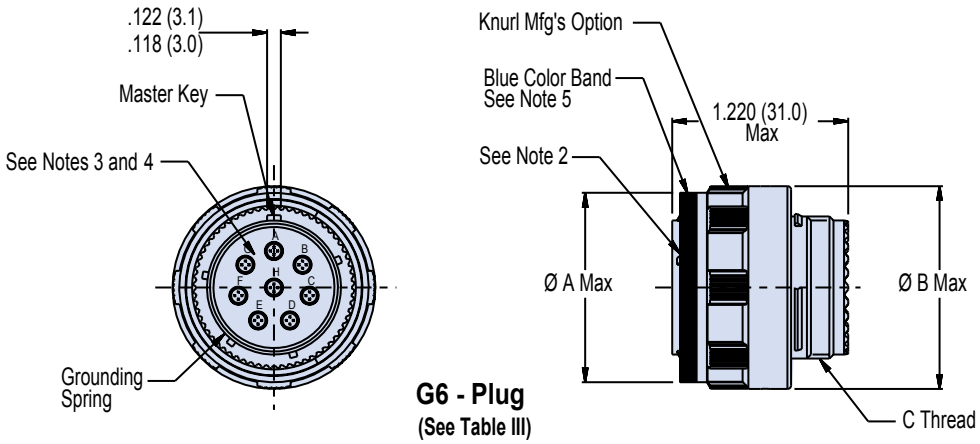

G6 - Plug
(See Table III)

APPLICATION NOTES

1. Material/Finish (See Table II).
2. Assembly identified with Glenair's, part number and date code
3. Insert arrangements IAW MIL-STD-1560 and Figure 1.
4. Insert arrangements shown is for reference only.
5. Blue color band indicates rear release retention system.
6. Front panel mount only.
7. Parts will be identified "A" or "B."

© 2010 Glenair, Inc.

GLENAIR, INC. • 1211 AIR WAY • GLENDALE, CA 91201-2497 • 818-247-6000 • FAX 818-500-9912
www.glenair.com E-Mail: sales@glenair.com

257-606 (07)
Jam Nut Mount Quadrax Plug Receptacle Connector
MIL-DTL-38999 Series III Type

Basic Part Number
257-606 = D38999 Series III Type Quadrax Connector

Finish/Material
(See Table II)

Ground Plane Option
G = Outer Contacts Grounded to Shell
— = None

Shell Size

Insert Designator
A = Pin Insert (Less Contacts)
B = Socket Insert (Less Contacts
(See Note 7)

257-606 NF 07 - 25Q - G 08 A N

Connector Style
07 = Jam Nut Mount Receptacle

Insert Arrangement Dash Number
(See Note 3)

Alternate Key Position
A, B, C, D, or E
(N for Normal)

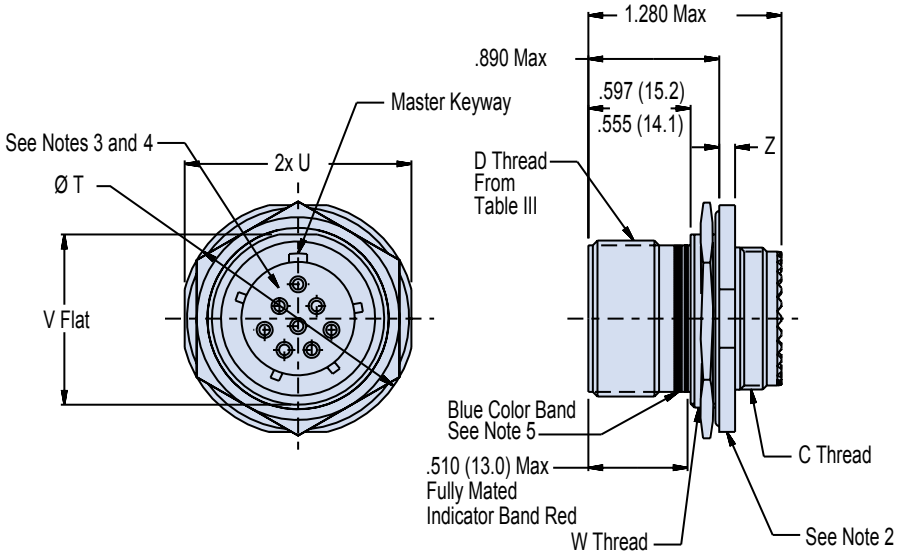

07 - Jam Nut Mount Receptacle
(See Table IV)

APPLICATION NOTES

1. Material/Finish (See Table II).
2. Assembly identified with Glenair's, part number and date code
3. Insert arrangements IAW MIL-STD-1560 and Figure 1.
4. Insert arrangements shown is for reference only.
5. Blue color band indicates rear release retention system.
6. Front panel mount only.
7. Parts will be identified "A" or "B."

© 2010 Glenair, Inc. CAGE CODE 06324 Printed in U.S.A.

257-606
Quadrax Connector Dimensions,
Finish and Ground Plane • MIL-DTL-38999 Series III Type

Glenair®

TABLE I: G6 PLUG DIMENSIONS

Shell Size Code	Shell Size	ø A Max.	ø B Max.	C Thread
A	09	.811 (20.6)	.858 (21.8)	M12 x 1.0-6g 0.100R
B	11	.929 (23.6)	.984 (25.0)	M15 x 1.0-6g 0.100R
E	17	1.358 (34.5)	1.406 (35.7)	M25 x 1.0-6g 0.100R
F	19	1.469 (37.3)	1.516 (38.5)	M28 x 1.0-6g 0.100R
G	21	1.594 (40.5)	1.642 (41.7)	M31 x 1.0-6g 0.100R
H	23	1.720 (43.7)	1.768 (44.9)	M34 x 1.0-6g 0.100R
J	25	1.843 (46.8)	1.890 (48.0)	M37 x 1.0-6g 0.100R

TABLE II: MATERIAL/FINISH and GROUND PLANE

Sym	Material	Finish	Ground Plane
M	Aluminum	Electroless Nickel	1 mV
NF		Cadmium O.D. Over Electroless Nickel	2.5 mV
XM	Composite	Electroless Nickel	3.0 mV
XW		Cadmium O.D. over Electroless Nickel	3.0 mV

Consult Factory for Additional Plating Options

TABLE III: 00 WALL MOUNT DIMENSIONS

Shell Size Code	Shell Size	D Thread	E Sq.	F BSC	G BSC (See Note 6)	H	J	K	L
A	09	.6250-.1P-.3L-TS-2A	.949 (24.1) .925 (23.5)	.719 (18.3)	.626 (15.9)	.136 (3.5) .120 (3.0)	.224 (5.7) .208 (5.3)	.144 (3.7) .083 (2.1)	.823 (20.9) .768 (19.5)
B	11	.7500-.1P-.3L-TS-2A	1.043 (26.5) 1.019 (25.9)	.812 (20.6)	.719 (18.3)		.202 (5.1) .186 (4.7)		
E	17	1.1875-.1P-.3L-TS-2A	1.323 (33.6) 1.299 (33.0)	1.062 (27.0)	.969 (24.6)				
F	19	1.2500-.1P-.3L-TS-2A	1.449 (36.8) 1.425 (36.2)	1.156 (29.4)	1.062 (27.0)				
G	21	1.3750-.1P-.3L-TS-2A	1.575 (40.0) 1.551 (39.4)	1.250 (31.8)	1.156 (29.4)			.171 (4.3) .083 (2.1)	.791 (20.1) .736 (18.7)
H	23	1.5000-.1P-.3L-TS-2A	1.701 (43.2) 1.667 (42.3)	1.375 (34.9)	1.250 (31.8)	.162 (4.1) .146 (3.7)	.250 (6.4) .234 (5.9)		
J	25	1.6250-.1P-.3L-TS-2A	1.823 (46.3) 1.799 (45.7)	1.500 (38.1)	1.375 (34.9)				

© 2010 Glenair, Inc. CAGE CODE 06324 Printed in U.S.A.

GLENAIR, INC. • 1211 AIR WAY • GLENDALE, CA 91201-2497 • 818-247-6000 • FAX 818-500-9912
www.glenair.com E-Mail: sales@glenair.com

257-606
Quadrax Connector Dimensions and Cut-Outs
MIL-DTL-38999 Series III Type

TABLE II: MATERIAL/FINISH		
Sym	**Material**	**Finish**
M	Aluminum	Electroless Nickel
NF		Cadmium O.D. Over Electroless Nickel
MT		Ni-PTFE 1,000 Hour Grey™ (Nickel Fluorocarbon Polymer)
XM	Composite	Electroless Nickel
XW		Cadmium O.D. Over Electroless Nickel
XMT		Ni-PTFE 1,000 Hour Grey™ (Nickel Fluorocarbon Polymer)l

Consult Factory for Additional Plating Options

TABLE IV: 07 JAM NUT MOUNT						
Shell Size Code	**Shell Size**	**øT**	**U**	**V Flat**	**W Thread**	**Z**
A	**09**	1.200 (30.5) 1.178 (29.9)	1.078 (27.4) 1.048 (26.6)	.654 (16.6) .645 (16.4)	M17 x 1.0-6g 0.100R	.122 (3.1) .083 (2.1)
B	**11**	1.386 (35.2) 1.362 (34.6)	1.268 (32.2) 1.236 (31.4)	.755 (19.2) .745 (18.9)	M20 x 1.0-6g 0.100R	
E	**17**	1.764 (44.8) 1.740 (44.2)	1.642 (41.7) 1.610 (40.9)	1.191 (30.3) 1.181 (30.0)	M32 x 1.0-6g 0.100R (See Note 6)	
F	**19**	1.949 (49.5) 1.925 (48.9)	1.827 (46.4) 1.795 (45.6)	1.316 (33.4) 1.306 (33.2)	M35 x 1.0-6g 0.100R	.153 (3.9) .114 (2.9)
G	**21**	2.075 (52.7) 2.051 (52.1)	1.953 (49.6) 1.921 (48.8)	1.441 (36.6) 1.431 (36.3)	M38 x 1.0-6g 0.100R	
H	**23**	2.201 (55.9) 2.177 (55.3)	2.079 (52.8) 2.047 (52.0)	1.566 (39.8) 1.556 (39.5)	M41 x 1.0-6g 0.100R	
J	**25**	2.323 (59.0) 2.299 (58.4)	2.205 (56.0) 2.173 (55.2)	1.691 (43.0) 1.681 (42.7)	M44 x 1.0-6g 0.100R	

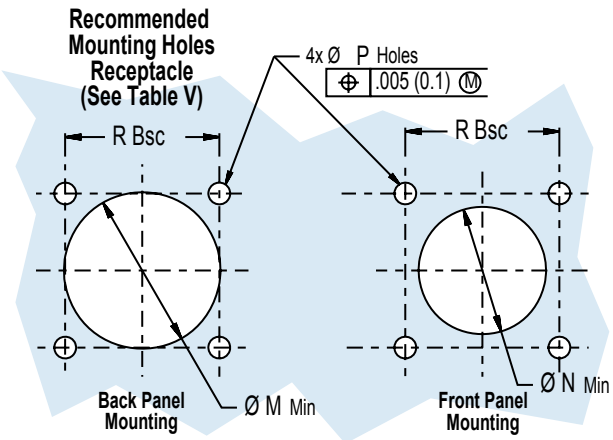

TABLE V: MOUNTING HOLE DIMENSIONS					
Shell Size Code	**Shell Size**	**øM Min**	**øN Min**	**P Holes**	**R BSC**
A	**09**	.656 (16.7)	.516 (13.1)	.133 (3.4) .123 (3.1)	.719 (18.3)
B	**11**	.796 (19.5)	.625 (15.9)		.812 (20.6)
E	**17**	1.219 (31.0)	1.016 (25.8)		1.062 (27.0)
F	**19**	1.297 (32.4)	1.141 (29.0)		1.156 (29.4)
G	**21**	1.422 (36.1)	1.266 (32.2)		1.250 (31.8)
H	**23**	1.547 (39.3)	1.375 (34.9)	.159 (4.0) .149 (3.8)	1.375 (34.9)
J	**25**	1.672 (42.5)	1.484 (37.7)	.155 (3.9) .145 (3.7)	1.500 (38.1)

© 2010 Glenair, Inc. CAGE CODE 06324 Printed in U.S.A.

257-606
Quadrax Connector Insert Arrangements
MIL-DTL-38999 Series III Type (IAW MIL-STD-1560)

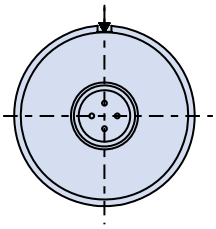

ARRANGEMENT 09Q-05

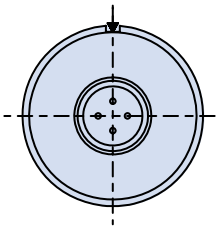

ARRANGEMENT 11Q-01

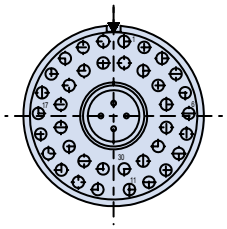

ARRANGEMENT 17Q-02
1X SIZE 8 QUADRAX
38X SIZE 22

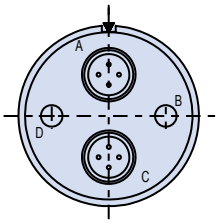

ARRANGEMENT 17Q-22
(IAW PREN 3645-001)
2X SIZE 8 QUADRAX
2X SIZE 12

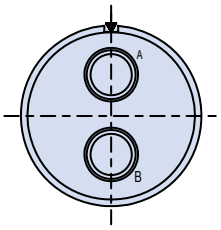

ARRANGEMENT 17Q-75
(IAW PREN 3645-001)
2X SIZE 8 QUADRAX

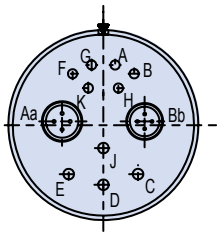

ARRANGEMENT 19Q-12
6X SIZE 20
4X SIZE 16
2X SIZE 8 QUADREX

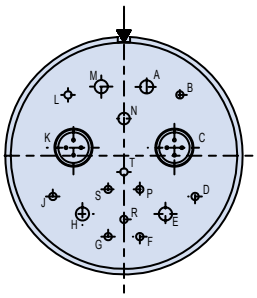

ARRANGEMENT 19Q-17
10X SIZE 22D
1X SIZE 20
4X SIZE 16
2X SIZE 8 QUADRAX

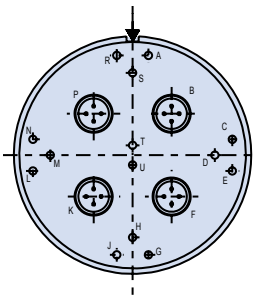

ARRANGEMENT 19Q-18
14X SIZE 22D
4X SIZE 8 QUADRAX

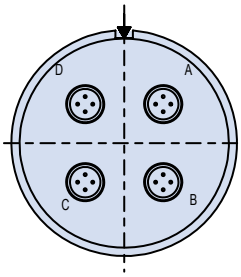

ARRANGEMENT 21Q-75
4X SIZE 8 QUADRAX

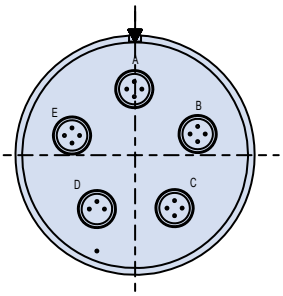

ARRANGEMENT 23Q-05
(IAW PREN 3645-001)
5X SIZE 8 QUADRAX

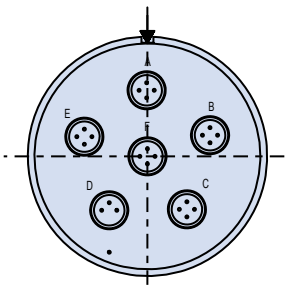

ARRANGEMENT 23Q-06
(IAW PREN 3645-001)
6X SIZE 8 QUADRAX

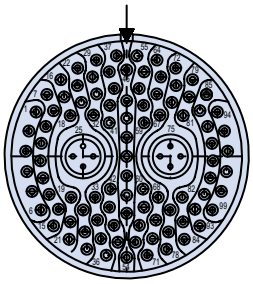

ARRANGEMENT 25Q-07
97X SIZE 22
2X SIZE 8 QUADRAX

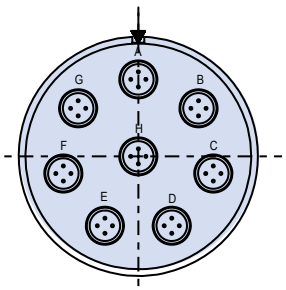

ARRANGEMENT 25Q-08
8X SIZE 8 QUADRAX

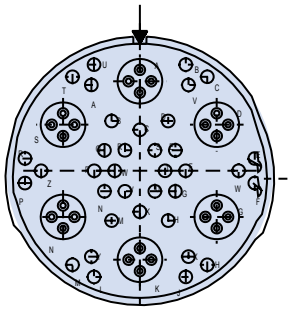

ARRANGEMENT 25Q-17
36X SIZE 22
6X SIZE 8 QUADRAX

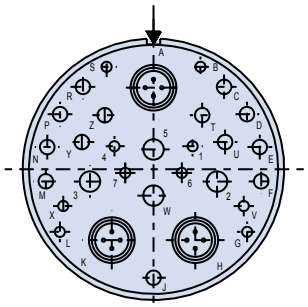

ARRANGEMENT 25Q-20
(IAW PREN 3645-001)
10X SIZE 20
13X SIZE 16
4X SIZE 12
3X SIZE 8 QUADRAX

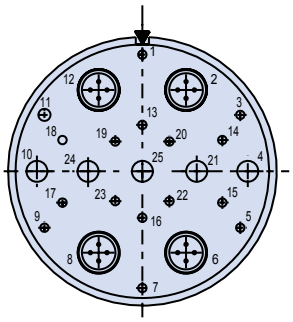

ARRANGEMENT 25Q-26
(IAW PREN 3645-001)
16X SIZE 20, 5X SIZE 12
4X SIZE 8 QUADRAX

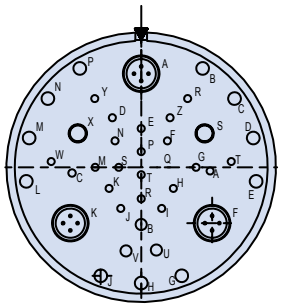

ARRANGEMENT 25Q-41
22X SIZE 22D, 3X SIZE 20
11X SIZE 16, 2X SIZE 12

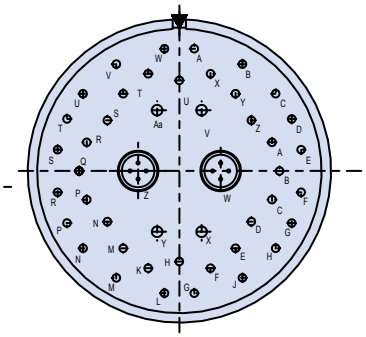

ARRANGEMENT 25Q-46
40X SIZE 20
4X SIZE 16

Mating Face of Pin Insert Shown

© 2010 Glenair, Inc.

CAGE CODE 06324

Printed in U.S.A.

Glenair®

257-616
Twinax and Quadrax PC Tail Contacts
MIL-DTL-38999 Series III Type

Basic Part Number
257-616 = D38999 Series III Type Quadrax/Coax Connector

Shell Size

For common ground option (Coax, Twinax and Quadrax replace "–" with G

Insert Arr. Dash No.
See Table II

Alternate Key Position Per MIL-DTL-38999
A, B, C, D, E, N = Normal

257-616 NF - 17 C - 8 S N

Material/Finish
(See Table II)

Contact Type *(If Any)*
C = Coax Contact
Q = Quadrax Contact

Insert Designator
S = Socket (including 100 OHM Quadrax)
P = Pin (including 100 OHM Quadrax)
C = Pin, 150 OHM Quadrax
D = Socket, 150 OHM Quadrax

TABLE I: DIMENSIONS

Shell Size Code	Shell Size	A Thread	B Sq		C Bsc		D	E	Ø G		J Holes
			In	mm	In	mm					
A	9	.6250.1P-.3L-TS-2A	1.015 1.005	25.78 25.53	.719	18.26	.171 .083 (4.34) (2.11)	.791 .736 (20.09) (18.64)	0.656	16.66	.125 (3.18) Min
B	11	.7500-.1P-.3L-TS-2A	1.015 1.005	25.78 25.53	.812	20.62			0.796	20.22	
C	13	.8750-.1P-.3L-TS-2A	1.218 1.186	30.94 30.12	.906	23.01			0.921	23.39	
D	15	1.0000-.1P-.3L-TS-2A	1.286 1.254	32.66 31.85	.969	24.61			1.047	26.59	
E	17	1.1875-.1P-.3L-TS-2A	1.366 1.334	34.70 33.88	1.062	26.97			1.219	30.96	
F	19	1.2500-.1P-.3L-TS-2A	1.449 1.425	36.80 36.20	1.156	29.36			1.296	32.92	
G	21	1.3750-.1P-.3L-TS-2A	1.575 1.545	40.01 39.24	1.250	31.75			1.421	36.09	
H	23	1.5000-.1P-.3L-TS-2A	1.701 1.677	43.21 42.60	1.375	34.93			1.547	39.29	
J	25	1.6250-.1P-.3L-TS-2A	1.823 1.799	46.30 45.69	1.500	38.10			1.672	42.47	

Table II: Material and Finish

Symbol	Material	Finish Description
M	Aluminum	Electroless Nickel
MT		Nickel-PTFE
NF		Cadmium O.D. Over Eletroless Nickel

© 2014 Glenair, Inc.

257-616
Twinax and Quadrax PC Tail Contacts
MIL-DTL-38999 Series III Type

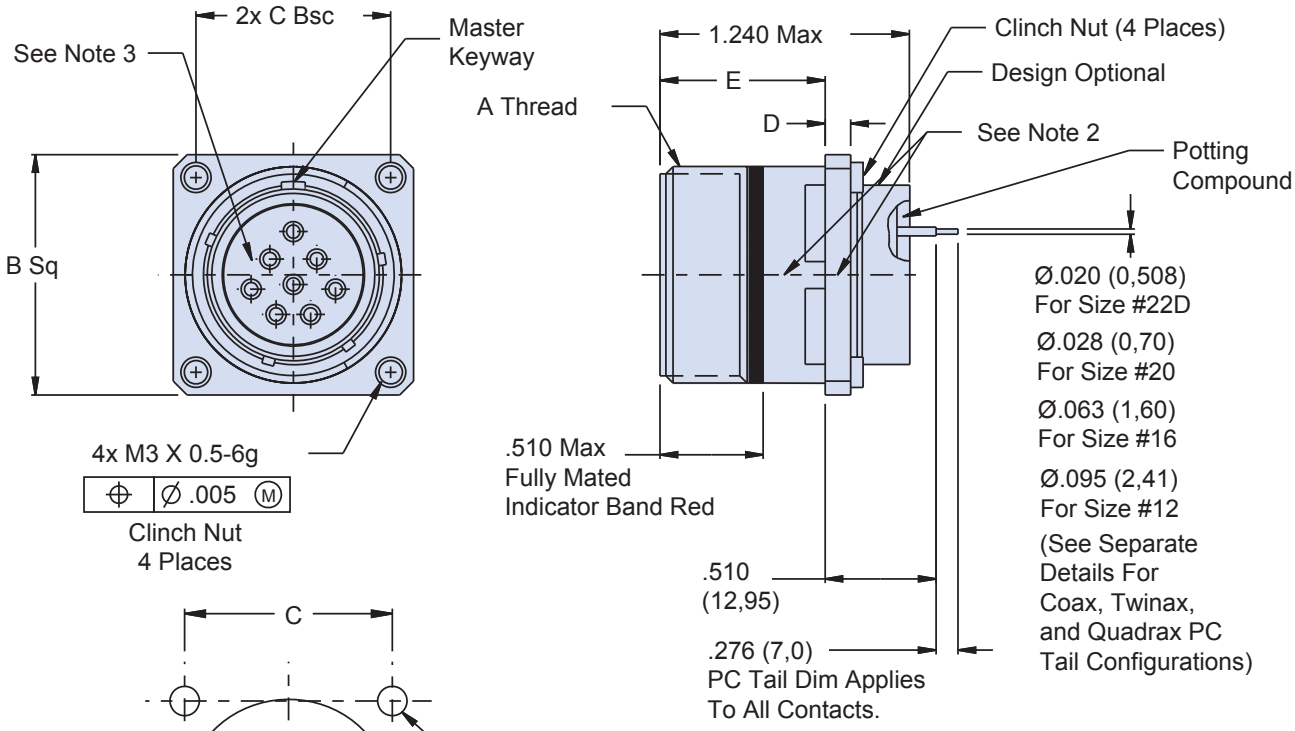

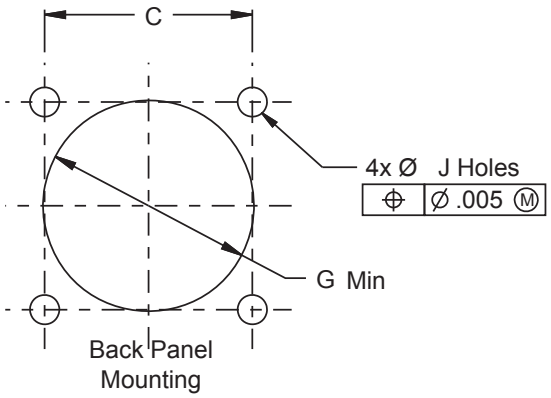

Recommended Mounting Holes
Max Panel Thickness .197 (5,0)
(See Table I)

© 2010 Glenair, Inc. CAGE CODE 06324 Rev. Aug. 2014 Printed in U.S.A.

257-616
Twinax and Quadrax PC Tail Contacts
MIL-DTL-38999 Series III Type

COAX CONTACT

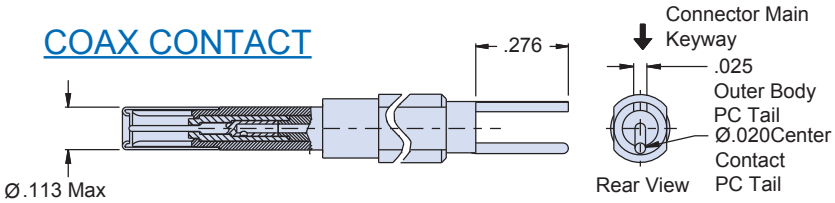

Size #16 Coax Contact, Socket, PC Tail Detail
Interface Per M39029/77

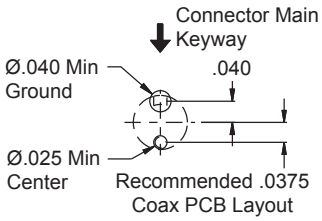

TWINAX CONTACT

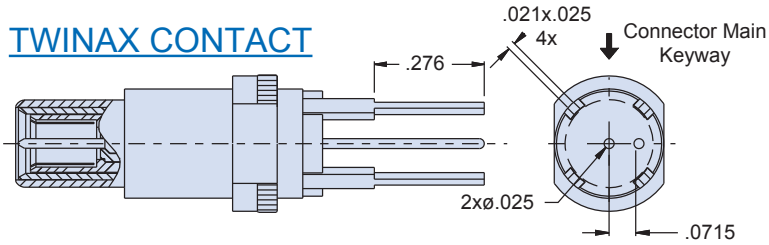

Size #8 Concentric Twinax Pin, PC Tail Detail
Interface Per M39029/90

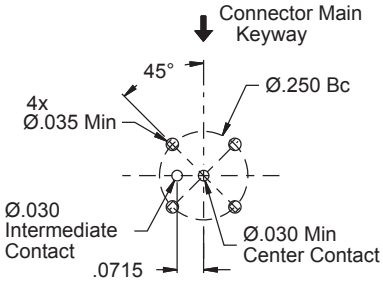

Recommended PCB Layout
For Size 8 Twinax

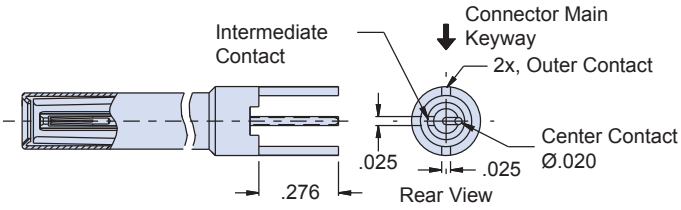

Size #12 Concentric Twinax, Socket, PC Tail Detail
(Not To Scale)

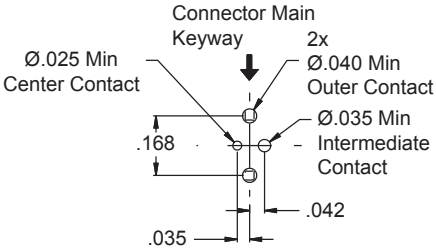

Recommended PCB Layout
For Size 12 Twinax

QUADRAX CONTACT

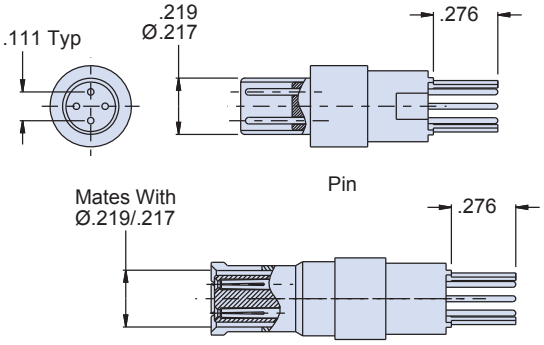

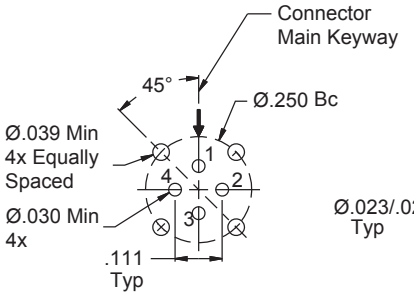

Recommended PC Board Layout
Pin Contact Shown.
(Skt Contact Pin 2 & 4 Opposite)

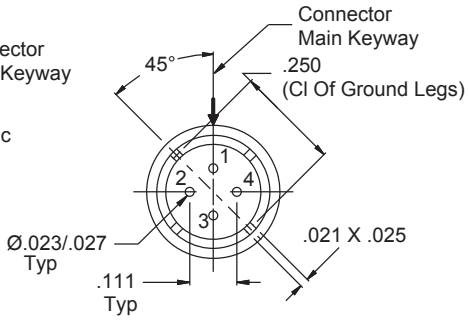

Detail A
Rear View Of Differential Quadrax
Pin Contact (Rear) Shown
Pin No's Are For Ref Only And Shall
Not Be Marked.
(Ref: Diferential Pairs: 1 & 3; 2 & 4)

© 2010 Glenair, Inc.

257-616
Twinax and Quadrax PC Tail Contacts
MIL-DTL-38999 Series III Type Insert Arrangements

TABLE II: INSERT ARRANGEMENTS
(not all arrangements shown, other arrangements available upon request)

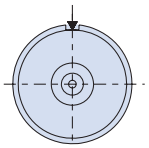

Arrangement 9-5
Available Only 9G5 (Common Ground Option)
Size 8 Concentric Twinax

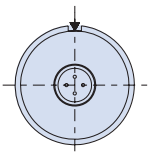

Arrangement 09QG05
(Common Ground Option Only)
Size 8 Quadrax Contact

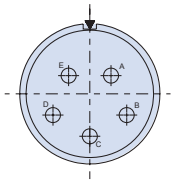

Arrangement 11-5
Size 20 Contact
5 Places

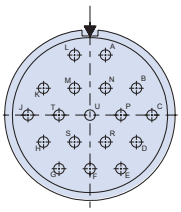

Arrangement 15-18
Size 20 Contact
18 Places

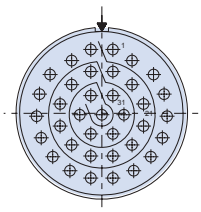

Arrangement 15-35
Size 22D Contact
37 Places

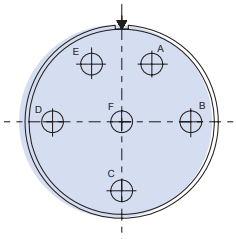

Arrangement 17-6
Size 12 Contact
6 Places

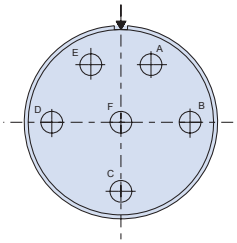

Arrangement 17t-6
17TG6(Common Ground Option)
Size 12 Twinax Contact, 6 Places

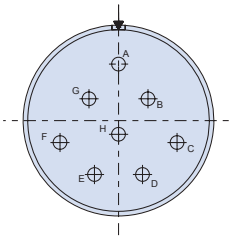

Arrangement 17C-8
17CG8 (Common Ground Option)
Size 16 Coax Contac, 8 Places

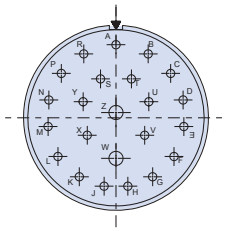

Arrangement 17-99
Size 16 Skt Contact, 2 Places
Size 20 Skt Contact, 21 Places

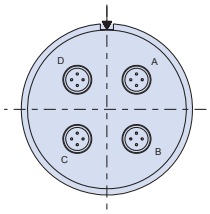

Arrangement 21Q-75
Size 8 Gage Quadrax, 4 Places

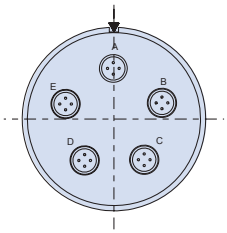

Arrangement 23Q-05
Size 8 Quadrax, 5 Places

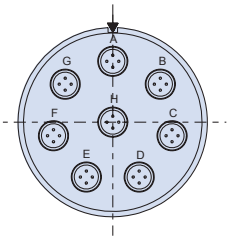

Arrangement 25Q-08
Size 8 Gage Quadrax, 8 Places

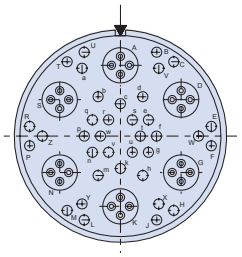

Arrangement 25Q-17
Size 22D Contact, 36 Places

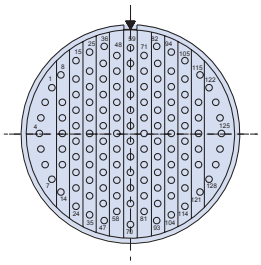

Arrangement 25-35
Size 22D Contact, 128 Places

© 2010 Glenair, Inc.
CAGE CODE 06324 Rev. Aug. 2014 Printed in U.S.A.

GLENAIR, INC. • 1211 AIR WAY • GLENDALE, CA 91201-2497 • 818-247-6000 • FAX 818-500-9912
www.glenair.com E-Mail: sales@glenair.com

854-001 and 854-002
Crimp Quadrax Pin and Socket Contacts
MIL-DTL-38999 Series III Type

Glenair®

Basic Number — **Dash Number** *(See Table I)*

854 - 002 - 01

001 - *Pin*
002 - *Socket*

TABLE I

Dash Number	Cables Accomodated
-01	Tensolite NF26Q100
-02	Tensolite NF24Q100
-03	Draka Fileca F 4704-6
-04	Draka Fileca F 4704-4

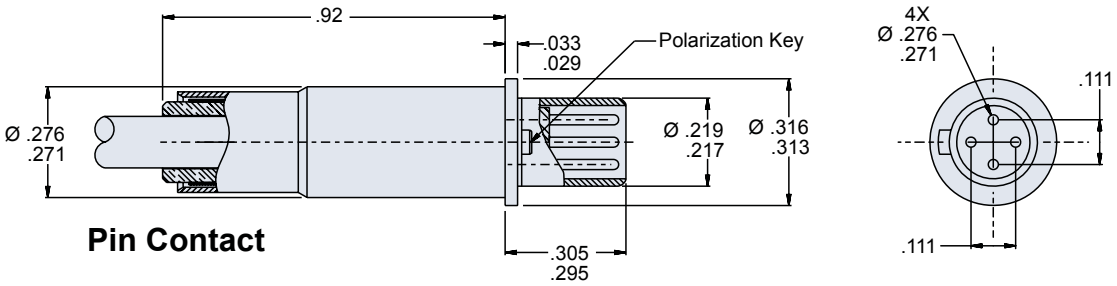

Pin Contact

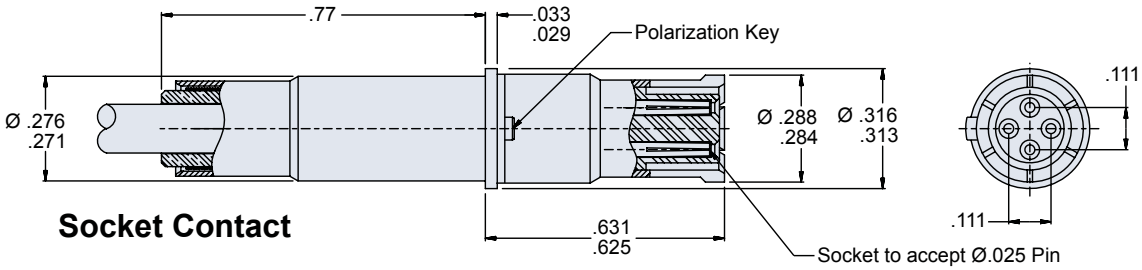

Socket Contact

PRODUCT ORDERING INFORMATION

Contact Size	Type	Glenair Part Number	Military Part Number	Tool Code	Cable Type Dash No.	Wire Size	Sample Contact
#8	Quadrax	854-001 854-002	N/A	C, J (Inner) K, M (Outer)	-01 - Tensolite NF26Q100 -02 - Tensolite NF24Q100 -03 - Draka Fileca F 4704-6 -04 - Draka Fileca F 4704-4	26AWG 24AWG 26AWG 24AWG	

APPLICATION NOTES

1. Assembly to be bagged and tagged with Glenair's name, part number and date code.
2. Material/Finish:
   Contact body - Copper alloy / Gold plated
   Inner contacts - Copper alloy / Gold plated
   Crimp ferrule - Brass or equivalent / Gold plated
   Insulator - Teflon, Ultem series 1000 or equivalent
3. Electrical Parameters:
   Differential impedance - 100 ohms nominal
   Dielectric withstanding voltage - 500 VRMS
   Insulation resistance - 5000 megohms minimum at 200 VDC
4. Contact is designed to accomodate cable listed in table I
5. Pin contact shall mate with Glenair socket contact p/n 854-001-xx and fit into Glenair connector series 257-459 only.

© 2010 Glenair, Inc. CAGE CODE 06324 Printed in U.S.A.

GLENAIR, INC. • 1211 AIR WAY • GLENDALE, CA 91201-2497 • 818-247-6000 • FAX 818-500-9912
www.glenair.com E-Mail: sales@glenair.com

Glenair Environmental and Hermetic MIL-DTL-38999 Type Bulkhead Feed-Thrus

SECTION F TABLE OF CONTENTS

GLENAIR MIL-DTL-38999 TYPE BULKHEAD FEED-THRUS:

MIL-DTL-38999 Type Bulkhead Feed-Thru Product Features.....F-1

231-103-H7 Series I Type Jam Nut Mount Hermetic Bulkhead Feed-Thru.....F-2

231-104-00 Series I Type Wall Mount Environmental Bulkhead Feed-Thru.....F-3

231-104-07 Series I Type Jam Nut Mount Environmental Bulkhead Feed-Thru.....F-4

231-104-09 Series I Type Jam Nut Mount Env. Plug/Receptacle Bulkhead Feed-Thru.....F-5

947-101 Series I Type Flange Mount Pressure Vessel Penetrator.....F-6

232-103-H7 Series II Type Jam Nut Mount Hermetic Bulkhead Feed-Thru.....F-7

232-104-00 Series II Type Wall Mount Environmental Bulkhead Feed-Thru.....F-8

233-103-H7 Series III Type Jam Nut Mount Hermetic Bulkhead Feed-Thru.....F-10

233-104-00 Series III Type Wall Mount Environmental Bulkhead Feed-Thru.....F-11

233-104-07 Series III Type Jam Nut Mount Environmental Bulkhead Feed-Thru.....F-12

233-103-H9 Series III Type Jam Nut Mount Hermetic Plug/Receptacle Bulkhead Feed-Thru.....F-13

947-112 Series III Type Jam Nut Mount Pressure Vessel Penetrator.....F-14

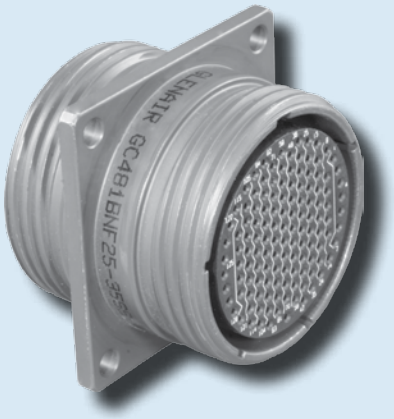

The Widest Range of MIL-DTL-38999 Type Bulkhead Feed-Thru Connectors Available In The Industry.

Product Applications

Bulkhead feed-thrus eliminate the need to permanently fix cable harnesses to panels–affording increased system flexibility, superior mechanical integrity, and greater serviceability. Glenair hermetic and environmental bulkhead feed-thru connectors are available in MIL-DTL-38999 Series I, II and III configurations. Hermetic Versions are ideally suited for high-pressure/low-leakage applications in air, sea and space environments, meeting a leak rate of 1 X 10^{-7} cm^3 per second. Environmental versions offer IP67 level sealing.

Errata

Catalog contents—including part numbers, materials and dimensions—are accurate to the best of our ability when we go to print. Even so, customers are advised to consult the factory for the latest specifications, particularly to confirm critical dimensions such as connector lengths, threads, and so on. When errors or mistakes are brought to our attention, corrected content is posted immediately to our website: www.glenair.com.

TABLE I: MATERIALS

Shell, Barrel, and Coupling Nut (Environmental)	Aluminum alloy 6061 per ASTM-B211
Shell, Barrel Coupling and Jam Nut (Hermetic)	Stainless steel per AMS-QQ-S-763
Shell, Barrel, Coupling Nut and Jam Nut (Hermetic)	Carbon Steel per ASTM-B545 or ASTM-B339
Grommet, Peripheral Seal and Interfacial Seal	Blended elastomer, 30% silicone per ZZ-R-765, 70% fluorosilicone per MIL-R-25988
Hermetic Insert	Vitreous glass
Feed-Thru Contacts (Environmental)	Copper Alloy / Gold Plate
Feed-Thru (Hermetic)	Nickel-iron alloy per ASTM F30 (Alloy 52),50 microinches gold plated per ASTM B488 Type 3 Code C Class 1,27 over nickel plate per QQ-N-290 Class 2, 50-100 microinches
Adhesives	Silicone and epoxy

TABLE II: POPULAR FINISHES

Plating Code	Material	Finish	Specification
M	Aluminum	Electroless Nickel	AMS-C-26074
NF	Aluminum	Cadmium Plate Olive Drab over Electroless Nickel	AMS-QQ-P-416, over AMS-C-26074 (1000 Hour Salt Spray)
NC	Aluminum	Zinc-Cobalt	ASTMB840
ZN	Aluminum	Olive Drab Zinc-Nickel	Zinc alloy per ASTM B841-91, Class 1 Type E Grade 3 over Electroless nickel per ASTM B733-90 SC2, Type 1 Class 5
MT	Aluminum	Ni-PTFE ***1,000 Hour Grey™*** (Nickel Fluorocarbon Polymer)	MIL-DTL-38999L (500 Hour Salt Spray)
AL	Aluminum	Pure Electrodeposited Aluminum	MIL-DTL-83488 (1000 Hour Salt Spray)
Z1	Stainless Steel	Passivate	AMS-QQ-P-35
FT	Carbon Steel	Fused Tin Plate	ASTM-B545 or ASTM-B339
ZL	Stainless Steel	Electrodeposited Nickel	SAE-AMS-QQ-N-290, Class 2

© 2010 Glenair, Inc. CAGE CODE 06324 Printed in U.S.A.

231-103-H7
Jam Nut Mount Hermetic Bulkhead Feed-Thru
MIL-DTL-38999 Series I Type

Connector Series
231 - D38999 Series I Type

Shell Style
H7 - Jam Nut Mount

Shell Size
09
11
13
15
17
19
21
23
25

Insert Arrangement
Per MIL-DTL-38999 Series I
MIL-STD-1560

Alternate Key Position
A, B, C, D
(*N* = Normal)

231 - 103 - H7 Z1 11 - 35 P N - 01

Connector Type
103 - Hermetic Bulkhead Feed-Thru

Connector Material and Finish
FT - Carbon Steel, Fused Tin
Z1 - CRES, Passivated
ZL - CRES, Nickel Finish

Contact Termination
P - Pin on Jam Nut Side
S - Socket on Jam Nut Side

Panel Accomodation
01 - .0625" (Min) .125" (Max)
02 - .0625" (Min) .250" (Max)
03 - .0625" (Min) .500" (Max)

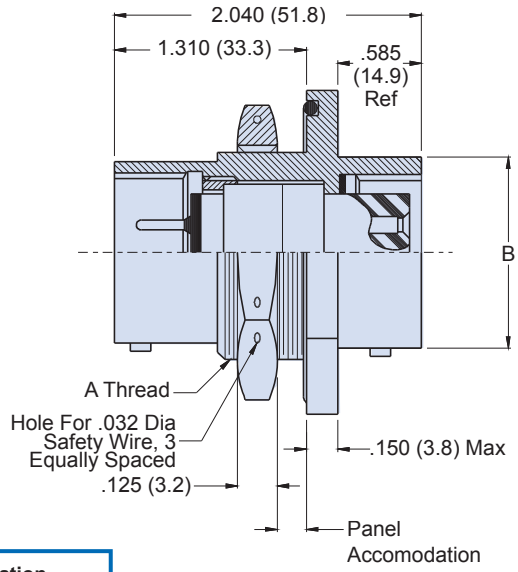

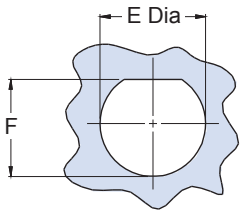

Recommended Panel Cut-Out

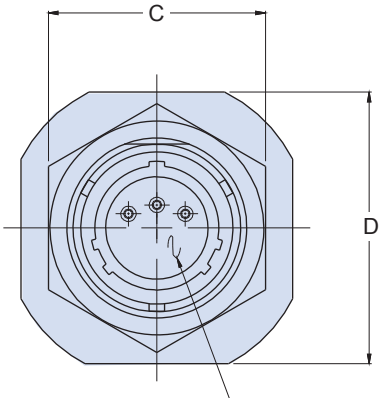

Insert Arrangement per MIL-DTL-38999, Series I MIL-STD-1560

TABLE I: CONNECTOR DIMENSIONS

SHELL SIZE	A THREAD CLASS 2A	B DIA MAX	C HEX	D FLATS	E DIA ±.005(0.1)	F +.000-.005 (0-0.1)
09	.688-24 UNEF	.573(14.6)	.875(22.2)	1.062(27.0)	.703(17.9)	.669(17.0)
11	0.812-20 UNEF	.701(17.8)	1.000(25.4)	1.250(31.8)	.827(21.0)	.769(19.5)
13	1.000-20 UNEF	.851(21.6)	1.188(30.2)	1.375(34.9)	1.015(25.8)	.955(24.3)
15	1.125-18 UNEF	.976(24.8)	1.312(33.3)	1.500(38.1)	1.140(29.0)	1.084(27.5)
17	1.250-18 UNEF	1.101(28.0)	1.438(36.5)	1.625(41.3)	1.265(32.1)	1.208(30.7)
19	1.375-18 UNEF	1.208(30.7)	1.562(39.7)	1.812(46.0)	1.390(35.3)	1.333(33.9)
21	1.500-18 UNEF	1.333(33.9)	1.688(42.9)	1.938(49.2)	1.515(38.5)	1.459(37.1)
23	1.625-18 UNEF	1.458(37.0)	1.812(46.0)	2.062(52.4)	1.640(41.7)	1.580(40.1)
25	1.750-18 UNS	1.583(40.2)	2.000(50.8)	2.188(55.6)	1.765(44.8)	1.709(43.4)

APPLICATION NOTES

1. Power to a given contact on one end will result in power to contact directly opposite, regardless of identification letter.
2. Hermeticity = less than 1 x 10^{-4} cc/sec at one atmosphere. Not for use in liquid atmosphere.
3. Material/finish:
   Shell, nut – CRES/passivated, carbon steel/fused tin or CRES/nickel per QQ-N-290.
   Contacts – Gold Plated. Pin: alloy 52; Skt.: copper alloy
   Insulator – fused vitreous glass/N.A.
   Seals – fluorosilicone rubber/N.A.
4. Metric dimensions (mm) are indicated in parentheses.

© 2010 Glenair, Inc. CAGE CODE 06324 Printed in U.S.A.

GLENAIR, INC. • 1211 AIR WAY • GLENDALE, CA 91201-2497 • 818-247-6000 • FAX 818-500-9912
www.glenair.com E-Mail: sales@glenair.com

231-104-00
Wall Mount Environmental Bulkhead Feed-Thru
MIL-DTL-38999 Series I Type

Glenair®

Connector Series
231 - D38999 Series I Type

Shell Style
00 - Wall Mount

Shell Size
09
11
13
15
17
19
21
23
25

Insert Arrangement
Per MIL-DTL-38999 Series I
MIL-STD-1560

Alternate Key Position
A, B, C, D
(*N* = Normal)

231 - 104 - 00 M 11 - 35 P N - 01

Connector Type
104 - Env. Bulkhead Feed-Thru

Connector Material and Finish
M - Aluminum / Electroless Nickel
NC - Aluminum / Zinc-Cobalt
NF - Cad / O.D. Over Electroless Nickel (1000hr Salt Spray)
ZN - Aluminum Zinc-Nickel Olive Drab
MT - Aluminum / Ni-PTFE 1000 Hour Grey™
AL - Aluminum / Pure Electrodeposited Aluminum

Contact Termination
P - Pin on Flange Side
S - Socket on Flange Side

Panel Accomodation
01 - .0625" (Min) .125" (Max)
02 - .0625" (Min) .250" (Max)
03 - .0625" (Min) .500" (Max)

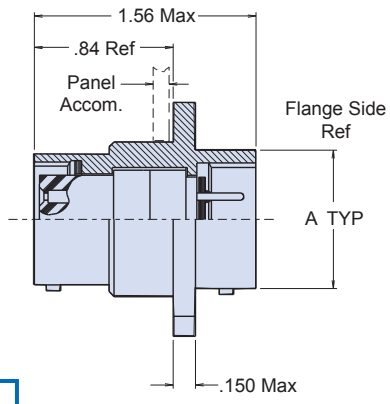

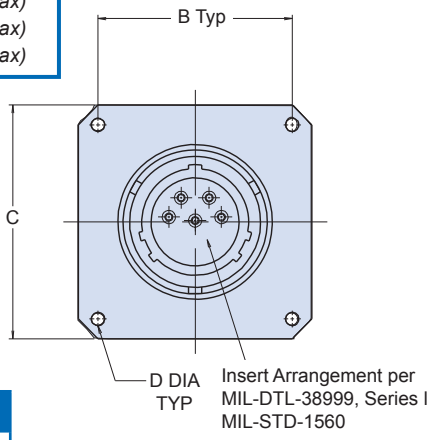

TABLE I: CONNECTOR DIMENSIONS

SHELL SIZE	A MAX	B SQ	C SQ	D DIA	E ±.005(0.1)
09	.573(14.6)	.719(18.3)	.938(23.8)	.125(3.2)	.703(17.9)
11	.701(17.8)	.812(20.6)	1.031(26.2)	.125(3.2)	.827(21.0)
13	.851(21.6)	.906(23.0)	1.125(28.8)	.125(3.2)	1.015(25.8)
15	.976(24.8)	.969(24.6)	1.219(31.0)	.125(3.2)	1.140(29.0)
17	1.101(28.0)	1.062(27.0)	1.312(33.3)	.125(3.2)	1.265(32.1)
19	1.208(30.7)	1.156(29.4)	1.438(36.5)	.125(3.2)	1.390(35.3)
21	1.333(33.9)	1.250(31.8)	1.562(39.7)	.125(3.2)	1.515(38.5)
23	1.458(37.0)	1.375(34.9)	1.688(42.9)	.156(4.0)	1.640(41.7)
25	1.583(40.2)	1.500(38.1)	1.812(46.0)	.156(4.0)	1.765(44.8)

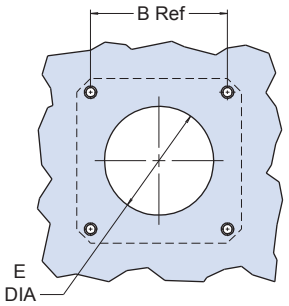

Recommended Panel Cutout

APPLICATION NOTES

1. Material/finish:
   Shells and nuts – Al alloy, 6061-T6, QQ-A-225/8, see Table I (D5)
   Contacts – Leaded nickel copper/gold plate MIL-G-45204, Type II, Class I
   Bayonet pins – AISI 300 series stainless steel/passivate, QQ-P-35
   Hoods – AISI 305 series stainless steel/passivate, QQ-P-35
   Inserts – Epiall 1908
   Seals – Silicone per ZZ-R-765
2. Metric Dimensions (mm) are indicated in parentheses.

© 2010 Glenair, Inc. CAGE CODE 06324 Printed in U.S.A.

231-104-07
Jam Nut Environmental Bulkhead Feed-Thru
MIL-DTL-38999 Series I Type

Connector Series
231 - D38999 Series I Type

Shell Style
07 - Jam Nut Mount

Shell Size
09
11
13
15
17
19
21
23
25

Insert Arrangement
Per MIL-DTL-38999 Series I
MIL-STD-1560

Alternate Key Position
A, B, C, D
(*N* = Normal)

231 - 104 - 07 M 11 - 35 P N - 01

Connector Type
104 - Env. Bulkhead Feed-Thru

Connector Material and Finish
M - Aluminum / Electroless Nickel
NC - Aluminum / Zinc-Cobalt
NF - Cad / O.D. Over Electroless Nickel (1000hr Salt Spray)
ZN - Aluminum Zinc-Nickel Olive Drab
MT - Aluminum / Ni-PTFE 1000 Hour Grey™
AL - Aluminum / Pure Electrodeposited Aluminum

Contact Termination
P - Pin on Jam Nut Side
S - Socket on Jam Nut Side

Panel Accomodation
01 - .0625" (Min) .125" (Max)
02 - .0625" (Min) .250" (Max)
03 - .0625" (Min) .500" (Max)

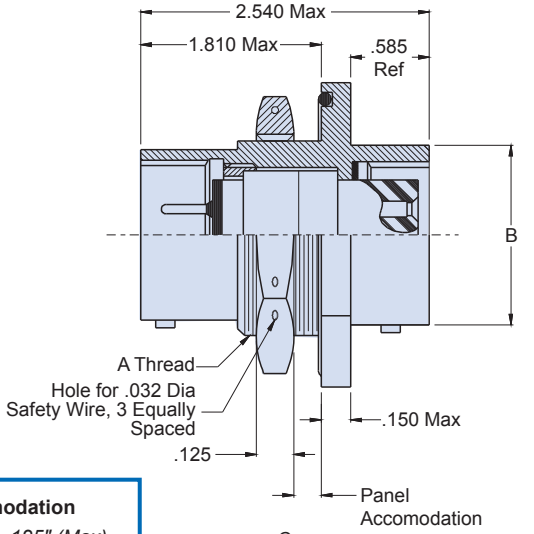

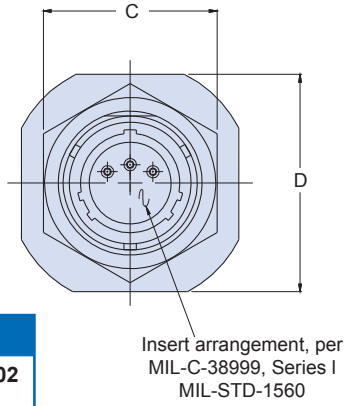

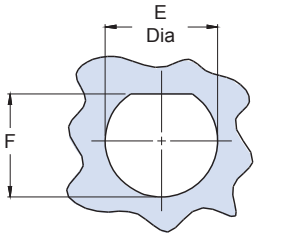

Recommended Panel Cut-Out

TABLE I: CONNECTOR DIMENSIONS

SHELL SIZE	A THREAD CLASS 2A	B DIA MAX	C HEX	D FLATS	E DIA ±.005(0.1)	F +.000-.002 (0-.06)
09	.688-24 UNEF	.573(14.6)	.875(22.2)	1.062(27.0)	.678(17.7)	.657(16.70)
11	.813-20 UNEF	.701(17.8)	1.000(25.4)	1.250(31.8)	.830(21.1)	.771(19.59)
13	1.000-20 UNEF	.851(21.6)	1.188(30.2)	1.375(34.9)	1.015(25.8)	.955(24.26)
15	1.125-18 UNEF	.976(24.8)	1.312(33.3)	1.500(38.1)	1.140(29.0)	1.085(27.56)
17	1.250-18 UNEF	1.101(28.0)	1.438(36.5)	1.625(41.3)	1.265(32.1)	1.210(30.73)
19	1.375-18 UNEF	1.208(30.7)	1.562(39.7)	1.812(46.0)	1.390(35.3)	1.335(33.91)
21	1.500-18 UNEF	1.333(33.9)	1.688(42.9)	1.938(49.2)	1.515(38.5)	1.460(37.08)
23	1.625-18 UNEF	1.458(37.0)	1.812(46.0)	2.062(52.4)	1.640(41.7)	1.585(40.26)
25	1.750-18 UNS	1.583(40.2)	2.000(50.8)	2.188(55.6)	1.765(44.8)	1.710(43.43)

APPLICATION NOTES

1. Power to a given contact on one end will result in power to contact directly opposite regardless of identification letter
2. Metric Dimensions (mm) are indicated in parentheses
3. Material/finish:
   Shell, lockring, jam nut—Al alloy, See Table II Page D-5

Contacts—Copper alloy/gold plate
Insulators—High grade rigid dielectric/N.A.
Bayonet Pins—CRES/passivate
Seals—silicone/N.A.

© 2010 Glenair, Inc. CAGE CODE 06324 Printed in U.S.A.

231-104-09
Jam Nut Mount Environmental Plug/Receptacle Bulkhead Feed-Thru
for MIL-DTL-38999 Series I Type

Glenair®

Connector Series
231 - D38999 Series I Type

Connector Type
104 - Env. Bulkhead Feed-Thru

Shell Size
09
11
13
15
17
19
21
23
25

Insert Arrangement
Per MIL-DTL-38999 Series I
MIL-STD-1560

Contact Termination
P - Pin on Plug Side
S - Socket on Plug Side

231 - 104 - 09 M 11 - 35 P N - 01

Shell Style
09 - Jam Nut Mount Plug/ Receptacle Gender Changer

Alternate Key Position
A, B, C, D
(*N* = Normal)

Connector Material and Finish
M - Aluminum / Electroless Nickel
NC - Aluminum / Zinc-Cobalt
NF - Cad / O.D. Over Electroless Nickel (1000hr Salt Spray)
ZN - Aluminum Zinc-Nickel Olive Drab
MT - Aluminum / Ni-PTFE 1000 Hour Grey™
AL - Aluminum / Pure Electrodeposited Aluminum

Panel Accomodation
01 - .0625" (Min) .125" (Max)
02 - .0625" (Min) .250" (Max)
03 - .0625" (Min) .500" (Max)

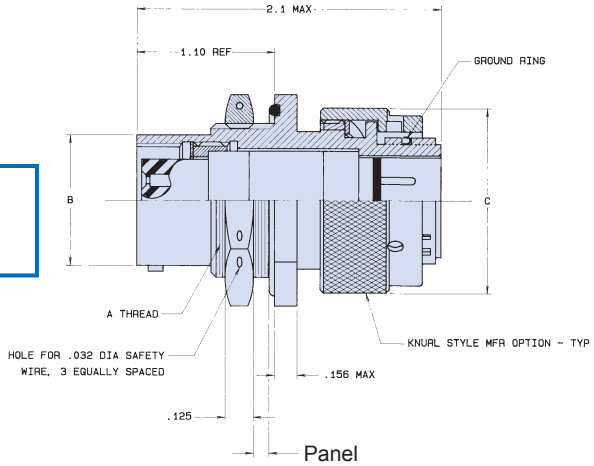

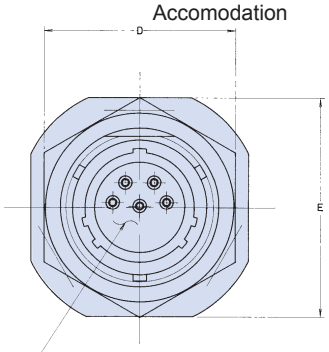

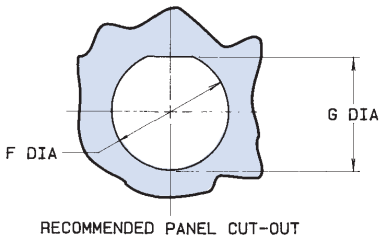

TABLE I: CONNECTOR DIMENSIONS

SHELL SIZE	A THREAD CLASS 2A	B DIA MAX	C MAX	D HEX	E FLATS	F DIA .005(0.1)	G +.000-.005 (0-0.1)
09	.688-24 UNEF	.573(14.6)	.900(22.9)	.875(22.2)	1.062(27.0)	.703(17.9)	.699(17.8)
11	0.813-20 UNEF	.701(17.8)	1.030(26.2)	1.000(25.4)	1.250(31.8)	.827(21.0)	.769(19.5)
13	1.000-20 UNEF	.851(21.6)	1.205(30.6)	1.188(30.2)	1.375(34.9)	1.015(25.8)	.955(24.3)
15	1.125-18 UNEF	.976(24.8)	1.325(33.7)	1.312(33.3)	1.500(38.1)	1.140(29.0)	1.084(27.5)
17	1.250-18 UNEF	1.101(28.0)	1.450(36.8)	1.438(36.5)	1.625(41.3)	1.265(32.1)	1.208(30.7)
19	1.375-18 UNEF	1.208(30.7)	1.565(39.8)	1.562(39.7)	1.812(46.0)	1.390(35.3)	1.333(33.9)
21	1.500-18 UNEF	1.333(33.9)	1.690(42.9)	1.688(42.9)	1.938(49.2)	1.515(38.5)	1.459(37.1)
23	1.625-18 UNEF	1.458(37.0)	1.795(45.6)	1.812(46.0)	2.062(52.4)	1.640(41.7)	1.580(40.1)
25	1.750-18 UNS	1.583(40.2)	1.920(48.8)	2.000(50.8)	2.188(55.6)	1.765(44.8)	1.709(43.4)

APPLICATION NOTES

1. Material/finish:
   Shell assembly, coupling nut, jam nut, lock ring—Aluminum Alloy, See Table II
   Contacts—Copper alloy/gold plate
   Bayonet pins, wave washer—CRES/passivate
   O-Ring, interfacial and peripheral seals—silicone/N.A.
   Insulators—High grade rigid dielectric/N/A.
   Ground Ring—Beryllium copper/gold plate
2. Metric Dimensions (mm) are indicated in parentheses.

© 2010 Glenair, Inc. CAGE CODE 06324 Printed in U.S.A.

GLENAIR, INC. • 1211 AIR WAY • GLENDALE, CA 91201-2497 • 818-247-6000 • FAX 818-500-9912
www.glenair.com E-Mail: sales@glenair.com

947-101
Flange Mount Environmental Bulkhead Feed-Thru
1.00in Panel • MIL-DTL-38999 Series I Type

Product Series

Shell Size
09
11
13
15
17
19
21
23
25

Alternate Key Position
A, B, C, D
*(**N** for Normal)*

947 - 101 - 21 - 35 B P

Basic Number

Insert Arrangement
Per MIL-DTL-38999 Series I
MIL-STD-1560

Contact Termination
P - *Pin on Flange Side*
S - *Socket on Flange Side*

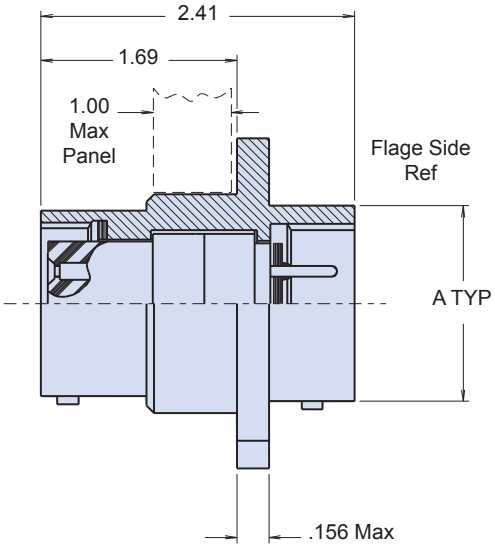

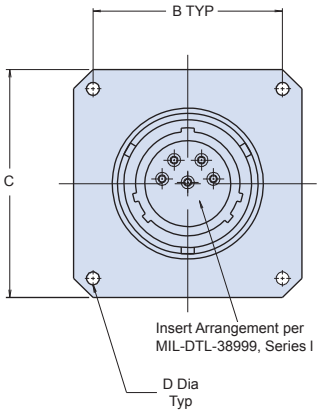

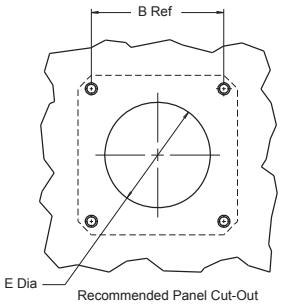

TABLE I: CONNECTOR DIMENSIONS

SHELL SIZE	A MAX	B SQ	C SQ	D DIA	E ±.005(0.1)
09	.573(14.6)	.719(18.3)	.938(23.8)	.125(3.2)	.703(17.9)
11	.701(17.8)	.812(20.6)	1.031(26.2)	.125(3.2)	.827(21.0)
13	.851(21.6)	.906(23.0)	1.125(28.8)	.125(3.2)	1.015(25.8)
15	.976(24.8)	.969(24.6)	1.219(31.0)	.125(3.2)	1.140(29.0)
17	1.101(28.0)	1.062(27.0)	1.312(33.3)	.125(3.2)	1.265(32.1)
19	1.208(30.7)	1.156(29.4)	1.438(36.5)	.125(3.2)	1.390(35.3)
21	1.333(33.9)	1.250(31.8)	1.562(39.7)	.125(3.2)	1.515(38.5)
23	1.458(37.0)	1.375(34.9)	1.688(42.9)	.156(4.0)	1.640(41.7)
25	1.583(40.2)	1.500(38.1)	1.812(46.0)	.156(4.0)	1.765(44.8)

APPLICATION NOTES

1. Assembly identified with manufacturer's name and part number, space permitting
2. Material/finish:
   Shells and nuts—Al alloy,6061-T6, QQ-A-225/8/cadmium O.D. per QQ-P-416 Type II, Class 3 over electroless nickel, Mil-C-26074, Class 1/2/3/4, Grade A/B/C, 500 hr. salt spray
   Contacts—leaded nickel copper/gold plate, MIL-G-45204,Type II, Class I
   Bayonet pins—AISI 300 series stainless steel/passivate, QQ-P-35
   Hoods—AISI 305 series stainless steel/passivate, QQ-P-35.
   Inserts—Epiall 1908
   Seals—silicone per ZZ-R-765
3. Metric Dimensions (mm) are indicated in parentheses.

© 2010 Glenair, Inc. CAGE CODE 06324 Printed in U.S.A.

232-103-H7
Jam Nut Mount Hermetic Bulkhead Feed-Thru
MIL-DTL-38999 Series II Type

Glenair®

Connector Series
232 - D38999 Series II Type

Shell Style
H7 - Jam Nut Mount

Shell Size
08
10
12
14
16
18
20
22
24

Insert Arrangement
Per MIL-DTL-38999 Series II
MIL-STD-1560

Alternate Key Position
A, B, C, D
(*N* = Normal)

232 - 103 - H7 Z1 10 - 35 P N - 01

Connector Type
103 - Hermetic Bulkhead Feed-Thru

Connector Material and Finish
FT - Carbon Steel, Fused Tin
Z1 - CRES, Passivated
ZL - CRES, Nickel Finish

Contact Termination
P - Pin on Jam Nut Side
S - Socket on Jam Nut Side

Panel Accomodation
01 - .0625" (Min) .125" (Max)
02 - .0625" (Min) .250" (Max)
03 - .0625" (Min) .500" (Max)

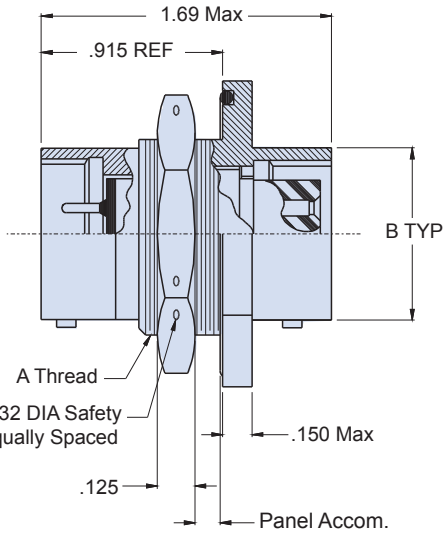

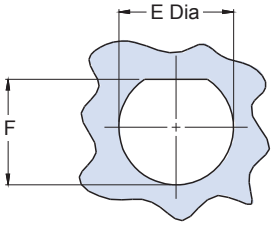

Recommended Panel Cut-Out

TABLE I: CONNECTOR DIMENSIONS

SHELL SIZE	A THREAD CLASS 2A	B DIA MAX	C HEX	D FLATS	E DIA ±.005(0.1)	F +.000-.005 (0-0.1)
08	.875-20 UNEF	.474(12.0)	1.062(27.0)	1.250(31.8)	.885(22.5)	.830(21.1)
10	1.000-20 UNEF	.591(15.0)	1.188(30.2)	1.375(34.9)	1.010(25.7)	.955(24.3)
12	1.125-18 UNEF	.751(19.1)	1.312(33.3)	1.500(38.1)	1.135(28.8)	1.085(27.6)
14	1.250-18 UNEF	.876(22.3)	1.438(36.5)	1.625(41.3)	1.260(32.0)	1.210(30.7)
16	1.375-18 UNEF	1.001(25.4)	1.562(39.7)	1.781(45.2)	1.385(35.2)	1.335(33.9)
18	1.500-18 UNEF	1.126(28.6)	1.688(42.9)	1.890(48.0)	1.510(38.4)	1.460(37.1)
20	1.625-18 UNEF	1.251(31.8)	1.812(46.0)	2.016(51.2)	1.635(41.5)	1.585(40.3)
22	1.750-18 UNS	1.376(35.0)	2.000(50.8)	2.140(54.4)	1.760(44.7)	1.710(43.4)
24	1.875-16 UN	1.501(38.1)	2.125(54.0)	2.265(57.5)	1.885(47.9)	1.835(46.6)

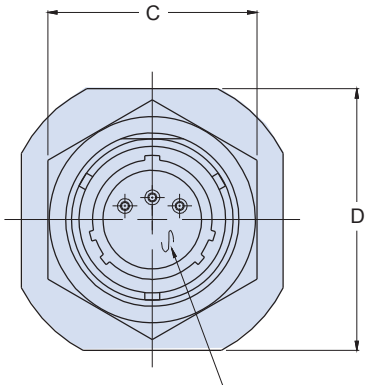

Insert Arrangement per MIL-DTL-38999, Series II MIL-STD-1560

APPLICATION NOTES

1. Power to a given contact on one end will result in power to contact directly opposite, regardless of identification letter.
2. Hermeticity = less than 1 x 10^{-4} cc/sec at one atmosphere. Not for use in liquid atmosphere.
3. Material/finish:
   Shell, nut – CRES/passivated, carbon steel/fused tin or CRES/nickel per QQ-N-290.
   Contacts – Gold Plated. Pin: alloy 52; Skt.: copper alloy
   Insulator – fused vitreous glass/N.A.
   Seals – fluorosilicone rubber/N.A.
4. Metric dimensions (mm) are indicated in parentheses.

© 2010 Glenair, Inc. CAGE CODE 06324 Printed in U.S.A.

GLENAIR, INC. • 1211 AIR WAY • GLENDALE, CA 91201-2497 • 818-247-6000 • FAX 818-500-9912
www.glenair.com E-Mail: sales@glenair.com

232-104-00
Wall Mount Environmental Bulkhead Feed-Thru
MIL-DTL-38999 Series II Type

Connector Series
232 - D38999 Series II Type

Shell Style
00 - Wall Mount

Shell Size
08
10
12
14
16
18
20
22
24

Insert Arrangement
Per MIL-DTL-38999 Series II
MIL-STD-1560

Alternate Key Position
A, B, C, D
(*N* = Normal)

232 - 104 - 00 M 10 - 35 P N - 01

Connector Type
104 - Env. Bulkhead Feed-Thru

Connector Material and Finish
M - Aluminum / Electroless Nickel
NC - Aluminum / Zinc-Cobalt
NF - Cad / O.D. Over Electroless Nickel (1000hr Salt Spray)
ZN - Aluminum Zinc-Nickel Olive Drab
MT - Aluminum / Ni-PTFE 1000 Hour Grey™
AL - Aluminum / Pure Electrodeposited Aluminum

Contact Termination
P - Pin on Flange Side
S - Socket on Flange Side

Panel Accomodation
01 - .0625" (Min) .125" (Max)
02 - .0625" (Min) .250" (Max)
03 - .0625" (Min) .500" (Max)

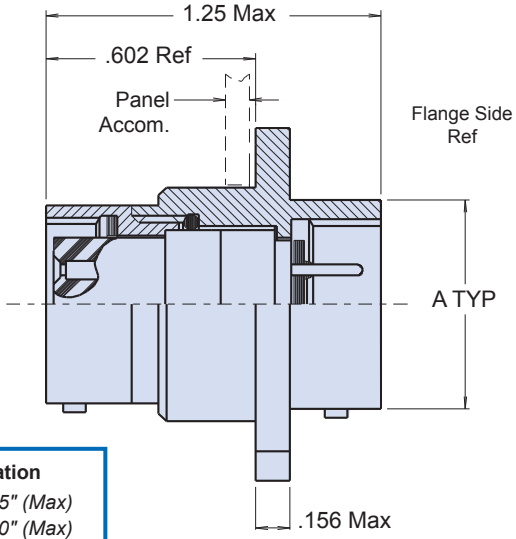

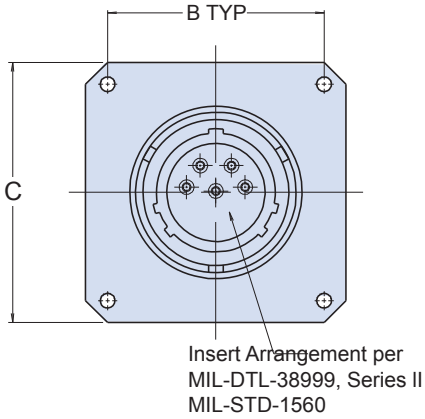

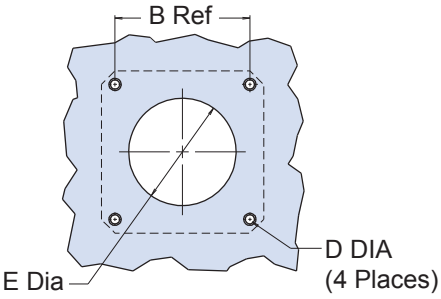

Recommended Panel Cut-Out

TABLE I: CONNECTOR DIMENSIONS

SHELL SIZE	A MAX	B SQ	C SQ	D DIA	E ±.005(0.1)
08	.474(12.0)	.594(15.1)	.818(20.8)	.125(3.2)	.580(14.7)
10	.591(15.0)	.719(18.3)	.944(24.0)	.125(3.2)	.697(17.7)
12	.751(19.1)	.812(20.6)	1.037(26.3)	.125(3.2)	.885(22.5)
14	.876(22.3)	.906(23.0)	1.131(28.7)	.125(3.2)	1.010(25.7)
16	1.001(25.4)	.969(24.6)	1.224(31.1)	.125(3.2)	1.135(28.8)
18	1.126(28.6)	1.062(27.0)	1.318(33.5)	.125(3.2)	1.260(32.0)
20	1.251(31.8)	1.156(29.4)	1.443(36.7)	.125(3.2)	1.385(35.2)
22	1.376(35.0)	1.250(31.8)	1.568(39.8)	.125(3.2)	1.510(38.4)
24	1.501(38.1)	1.375(34.9)	1.693(43.0)	.156(4.0)	1.635(41.5)

APPLICATION NOTES

1. Material/Finish:
   Shells and nuts – Al alloy,6061-T6,QQ-A-225/8, see Table II
   Contacts – Leaded nickel copper - gold plate MIL-G-45204, Type II, Class I.
   Bayonet pins – AISI 300 series stainless steel/passivate, QQ-P-35
   Hoods – AISI 305 series stainless steel/passivate, QQ-P -35.
   Inserts –High grade rigid dielectric/N.A.
   Seals – Silicone/ N.A.
2. Metric Dimensions (mm) are indicated in parentheses.

© 2010 Glenair, Inc. CAGE CODE 06324 Printed in U.S.A.

Too Fat to Fly?

Maybe. But Not Too Big To Be Saved by a Mouse.

One of the biggest challenges facing designers of armored vehicles and other rapid deployment combat platforms is the requirement to build systems which are transportable by air. In critical weight-reduction applications such as these, literally every ounce counts. That's why Glenair invented the Series 80 "Mighty Mouse;" an ultraminiature connector with all the performance characteristics of standard Mil-Spec products. The "Mighty Mouse" is being used in ground, air and sea applications where extreme levels of weight reduction are not just an option but a necessity. So, if your system is too fat to fly, consider a switch to the mouse. The Glenair "Mighty Mouse": Phenomenal Performance, Itty-Bitty Package.

Glenair®

1211 Air Way
Glendale, California 91201-2497
Telephone: 818-247-6000 · Facsimilie: 818-500-9912 · EMail: sales@glenair.com

United States • United Kingdom • Germany • Niordic • France • Italy • Spain • Japan

www.glenair.com

233-103-H7
Jam Nut Mount Hermetic Bulkhead Feed-Thru
MIL-DTL-38999 Series III Type

Connector Series
233 - D38999 Series III Type

Shell Style
H7 - Jam Nut Mount

Shell Size
09
11
13
15
17
19
21
23
25

Insert Arrangement
Per MIL-DTL-38999 Series III
MIL-STD-1560

Alternate Key Position
A, B, C, D, E
(*N* = Normal)

233 - 103 - H7 Z1 11 - 35 P N - 01

Connector Type
103 - Hermetic Bulkhead Feed-Thru

Connector Material and Finish
Z1 - CRES, Passivated
ZL - CRES, Nickel Finish

Contact Termination
P - Pin on Jam Nut Side
S - Socket on Jam Nut Side
PP - Pin-Pin
SS - Socket-Socket

Panel Accomodation
01 - .0625" (Min) .125" (Max)
02 - .0625" (Min) .250" (Max)
03 - .0625" (Min) .500" (Max)

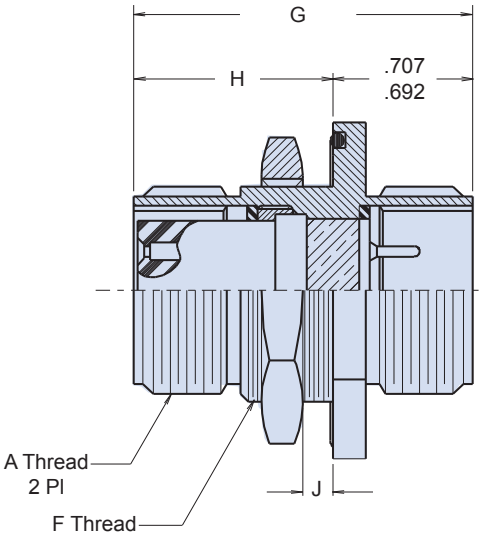

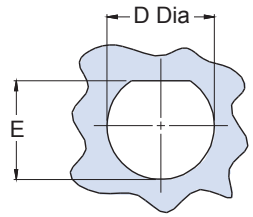

Recommended Panel Cut-Out

HERMETIC LEAK RATE MOD CODES

Designator	Required Leak Rate
–585A	1 x 10^{-10} cc Helium per second
–585B	1 x 10^{-9} cc Helium per second
–585C	1 x 10^{-8} cc Helium per second

TABLE I: CONNECTOR DIMENSIONS

	G Dim, OAL Max	H Dim, Max	J Dim, Panel
-01	1.650 (41.91)	.889 (22.58)	.125 (3.18) .062 (1.57)
-02	1.780 (45.21)	1.090 (27.69)	.250 (6.35) .062 (1.57)
-03	.8750 (51.56)	1.340 (34.04)	.500 (12.7) .062 (1.57)

TABLE II: CONNECTOR DIMENSIONS

SHELL SIZE	A THREAD 0.1 P-0.3L-TS-2	B DIA	C	D DIA	E DIM	F THREAD METRIC
09	.6250	1.189 (30.20)	1.063 (27.00)	.703 (17.86) .693 (17.60)	.657 (16.69) .655 (16.64)	M17 x 1.0-6g
11	.7500	1.375 (34.93)	1.252 (31.80)	.835 (21.21) .825 (20.96)	.771 (19.58) .769 (19.53)	M20 x 1.0-6g
13	.8750	1.500 (38.10)	1.374 (34.90)	1.020 (25.91) 1.010 (25.65)	.955 (24.26) .953 (24.21)	M25 x 1.0-6g
15	1.0000	1.626 (41.30)	1.500 (38.10)	1.145 (29.03) 1.135 (28.83)	1.085 (27.56) 1.083 (27.51)	M28 x 1.0-6g
17	1.1875	1.752 (44.50)	1.626 (41.30)	1.270 (32.26) 1.260 (32.00)	1.210 (30.73) 1.208 (30.68)	M32 x 1.0-6g
19	1.2500	1.937 (49.20)	1.811 (46.00)	1.395 (35.43) 1.385 (35.18)	1.335 (33.91) 1.333 (33.86)	M35 x 1.0-6g
21	1.3750	2.063 (52.40)	1.937 (49.20)	1.520 (38.61) 1.510 (38.35)	1.460 (37.08) 1.558 (39.57)	M38 x 1.0-6g
23	1.5000	2.189 (55.60)	2.063 (52.40)	1.645 (41.78) 1.635 (41.53)	1.585 (40.26) 1.583 (40.21)	M41 x 1.0-6g
25	1.6250	2.311 (58.70)	2.189 (55.60)	1.770 (44.96) 1.760 (44.70)	1.710 (43.34) 1.708 (43.38)	M44 x 1.0-6g

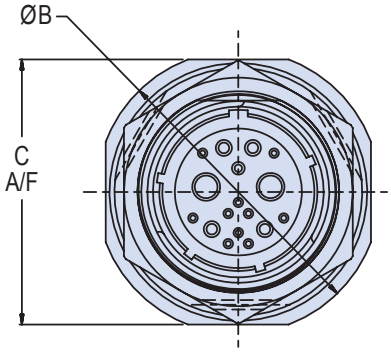

Insert Arrangement per
MIL-DTL-38999 Series III
MIL-STD-1560

APPLICATION NOTES

1. Power to a given contact on one end will result in power to contact directly opposite, regardless of identification letter.
2. Hermeticity = less than 1 x 10^{-7} cc/sec at one atmosphere. Not for use in liquid atmosphere.
3. Material/finish:
   Shell, nut – CRES/passivated, carbon steel/fused tin or CRES/nickel per QQ-N-290.
   Contacts – Gold Plated. Pin: alloy 52; Skt.: copper alloy
   Insulator – fused vitreous glass/N.A.
   Seals – fluorosilicone rubber/N.A.
4. Metric dimensions (mm) are indicated in parentheses.

© 2010 Glenair, Inc. CAGE CODE 06324 Rev. 090117 Printed in U.S.A.

233-104-00
Wall Mount Environmental Bulkhead Feed-Thru
MIL-DTL-38999 Series III Type

Glenair®

Connector Series
233 - D38999 Series III Type

Shell Style
00 - Wall Mount

Shell Size
09
11
13
15
17
19
21
23
25

Insert Arrangement
Per MIL-DTL-38999 Series III
MIL-STD-1560

Alternate Key Position
A, B, C, D, E
(*N* = Normal)

233 - 104 - 00 M 11 - 35 S N - 01

Connector Type
104 - Env. Bulkhead Feed-Thru

Connector Material and Finish
M - Aluminum / Electroless Nickel
NC - Aluminum / Zinc-Cobalt
NF - Cad / O.D. Over Electroless Nickel (1000hr Salt Spray)
ZN - Aluminum Zinc-Nickel Olive Drab
MT - Aluminum / Ni-PTFE 1000 Hour Grey™
AL - Aluminum / Pure Electrodeposited Aluminum

Panel Accomodation	H Max
01 - .0625" (Min) .125" (Max)	*1.53"*
02 - .0625" (Min) .250" (Max)	*1.66"*
03 - .0625" (Min) .500" (Max)	*1.91"*

Contact Termination
P - Pin on Panel Side
S - Socket on Panel Side
PP - Pin on Both Sides
SS - Socket on Both Sides
(See Notes 3 and 4)

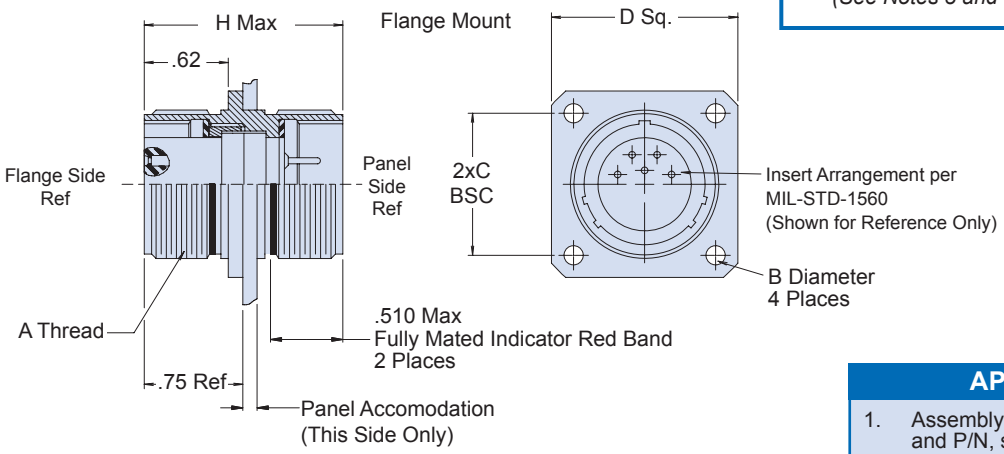

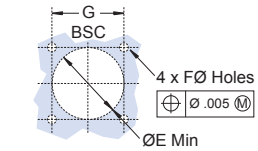

Recommended Panel Mounting Holes

TABLE I: CONNECTOR DIMENSIONS

SHELL SIZE	A THREAD 0.1 P-0.3L-2A	B DIA. ±0.010	C BSC	D DIM ±.020	Ø E MIN	Ø F HOLES	G BSC
09	.625	.128 (3.3)	.719 (18.3)	.938 (23.8)	.656 (16.7)	.133/.123 (3.4/3.1)	.719 (18.3)
11	.750	.128 (3.3)	.812 (20.6)	1.031 (26.2)	.796 (20.2)		.812 (20.6)
13	.875	.128 (3.3)	.906 (23.0)	1.125 (28.6)	.922 (23.4)		.906 (23.0)
15	1.000	.128 (3.3)	.969 (24.6)	1.219 (31.0)	1.047 (26.6)		.969 (24.6)
17	1.188	.128 (3.3)	1.062 (27.0)	1.312 (33.3)	1.219 (31.0)		1.062 (27.0)
19	1.250	.128 (3.3)	1.156 (29.4)	1.438 (36.5)	1.297 (32.9)		1.156 (29.4)
21	1.375	.128 (3.3)	1.250 (31.8)	1.562 (39.7)	1.422 (36.1)		1.250 (31.8)
23	1.500	.156 (4.0)	1.375 (34.9)	1.688 (42.9)	1.547 (39.3)	.156/.149 (4.0/3.8)	1.375 (34.9)
25	1.625	.156 (4.0)	1.500 (38.1)	1.812 (46.0)	1.672 (42.5)	.155/.145 (3.9/3.7)	1.500 (38.1)

APPLICATION NOTES

1. Assembly identified with manufacturer's name and P/N, space permitting.
2. Material/finish:
   Shell, lock ring—Al alloy, see Table II
   Contacts—Copper alloy/gold plate
   Insulators—High grade rigid dielectric/N.A.
   Seals—Silicone/N.A.
3. For pin/pin and skt/skt, symmetrical layout only. Consult factory fior available insert arrangements.
4. Power to a given contact on one end will result in power to contact directlly opposite, regardless of identification letter.
5. Electrical safety limits must be established by user. Peak voltage, switching surge, transient, etc., should be used to determine the safety application.
6. Metric Dimensions (mm) are indicated in parentheses.

© 2010 Glenair, Inc. CAGE CODE 06324 Printed in U.S.A.

Glenair®

233-104-07
Jam Nut Mount Environmental Bulkhead Feed-Thru
MIL-DTL-38999 Series III Type

Connector Series
233 - D38999 Series III Type

Shell Style
07 - Jam Nut Mount

Shell Size
09
11
13
15
17
19
21
23
25

Insert Arrangement
Per MIL-DTL-38999 Series III
MIL-STD-1560

Alternate Key Position
A, B, C, D, E
(*N* = Normal)

233 - 104 - 07 M 11 - 35 P N - 01

Connector Type
104 - Env. Bulkhead Feed-Thru

Connector Material and Finish
M - Aluminum / Electroless Nickel
NC - Aluminum / Zinc-Cobalt
NF - Cad / O.D. Over Electroless Nickel (1000hr Salt Spray)
ZN - Aluminum Zinc-Nickel Olive Drab
MT - Aluminum / Ni-PTFE 1000 Hour Grey™
AL - Aluminum / Pure Electrodeposited Aluminum

Panel Accomodation
01 - .0625" (Min) .125" (Max)
02 - .0625" (Min) .250" (Max)
03 - .0625" (Min) .500" (Max)

Contact Termination
P - Pin on Panel Side
S - Socket on Panel Side
PP - Pin on Both Sides
SS - Socket on Both Sides
(See Notes 2 and 3)

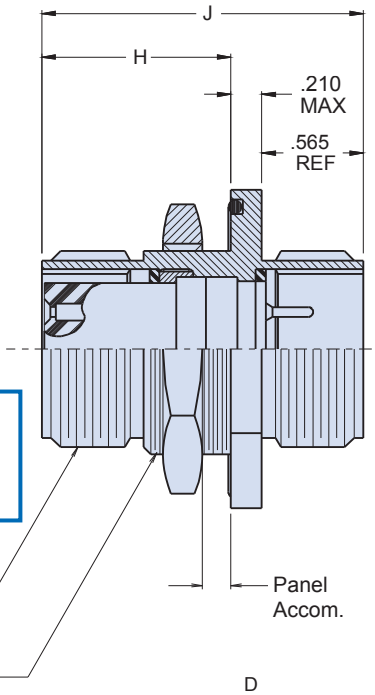

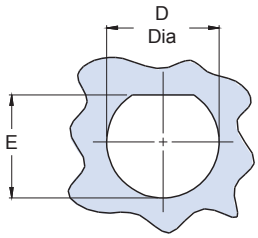

Recommended Panel Cut-Out

Insert Arrangements per
MIL-DTL-38999 Series III
MIL-STD-1560

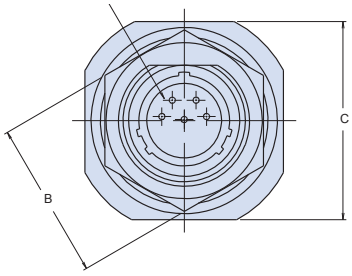

TABLE II: DASH NUMBERS

Dash No.	J Max	H Max
01	1.600 (40.6)	0.900 (22.9)
02	1.730 (43.9)	1.020 (25.9)
03	1.980 (50.3)	1.270 (32.3)

TABLE I: CONNECTOR DIMENSIONS

SHELL SIZE	A THREAD 0.1 P-0.3L-TS-2	B DIM	C DIM MAX	ØD +.005	E DIM +.000/-.002	F THREAD CLASS 2A
9	.6875	.875 (22.2)	1.090 (27.7)	.698 (17.7)	.656 (16.7)	11/16-24 UNEF
11	.7500	1.000 (25.4)	1.280 (32.5)	.830 (21.1)	.770 (19.6)	13/16-20 UNEF
13	.8750	1.250 (31.8)	1.400 (35.6)	1.015 (25.8)	.954 (24.2)	1-20 UNEF
15	1.0000	1.375 (34.9)	1.530 (38.9)	1.140 (29.0)	1.084 (27.5)	1 1/8-18 UNEF
17	1.1875	1.500 (38.1)	1.660 (42.2)	1.265 (32.1)	1.207 (30.7)	1 1/4-18 UNEF
19	1.2500	1.625 (41.3)	1.840 (46.7)	1.390 (35.3)	1.334 (33.9)	1 3/8-18 UNEF
21	1.3750	1.750 (44.5)	1.970 (50.5)	1.515 (38.5)	1.459 (40.4)	1 1/2-18 UNEF
23	1.5000	1.875 (47.6)	2.090 (53.1)	1.640 (41.7)	1.584 (40.2)	1 5/8-18 UNEF
25	1.6250	2.000 (50.8)	2.210 (56.1)	1.765 (44.8)	1.709 (43.4)	1 3/4-18 UNS

APPLICATION NOTES

1. Assembly identified with manufacturer's name and P/N, space permitting.
2. For pin/pin and skt/skt, symmetrical layout only. Consult factory fior available insert arrangements.
3. Power to a given contact on one end will result in power to contact directlly opposite, regardless of identification letter.
4. Electrical safety limits must be established by user. Peak voltage, switching surge, transient, etc., should be used to determine the safety application.
5. Material/finish:
   Shell, lock ring—Al alloy, see Table II
   Contacts—Copper alloy/gold plate
   Insulators—High grade rigid dielectric/N.A.
   Seals—Silicone/N.A.
6. Metric Dimensions (mm) are indicated in parentheses.

© 2010 Glenair, Inc. CAGE CODE 06324 Printed in U.S.A.

GLENAIR, INC. • 1211 AIR WAY • GLENDALE, CA 91201-2497 • 818-247-6000 • FAX 818-500-9912
www.glenair.com E-Mail: sales@glenair.com

233-103-H9
Jam Nut Mount Hermetic Plug/Receptacle Bulkhead Feed-Thru
for MIL-DTL-38999 Series III Type

Connector Series
233 - D38999 Series III Type

Connector Type
103 - Hermetic Bulkhead Feed-Thru

Shell Size
09
11
13
15
17
19
21
23
25

Insert Arrangement
Per MIL-DTL-38999 Series III
MIL-STD-1560

Contact Termination
P - Pin on Plug Side
S - Socket on Plug Side

233 - 103 - H9 P 11 - 35 P N - 01

Shell Style
H9 - Jam Nut Mount Plug/ Receptacle Gender Changer

Connector Material and Finish
Z1 - CRES, Passivated
ZL - CRES, Nickel Finish

Alternate Positions:
A, B, C, D, E
(*N* = Normal)

Panel Accomodation
01 - .0625" (Min) .125" (Max)
02 - .0625" (Min) .250" (Max)
03 - .0625" (Min) .500" (Max)

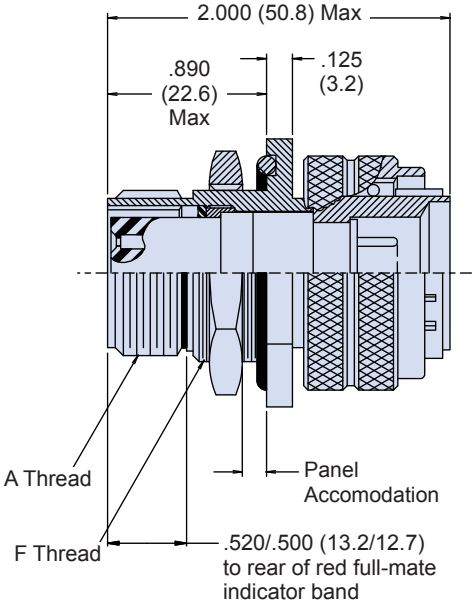

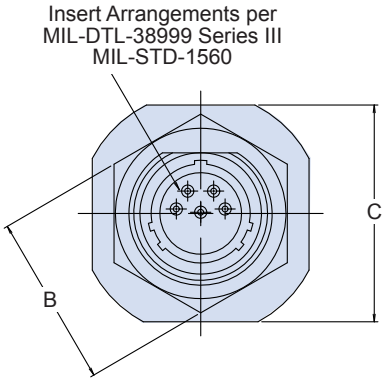

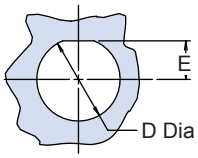

Recommended Panel Cut-Out

TABLE I: CONNECTOR DIMENSIONS

SHELL SIZE	A THREAD 0.1 P-0.3L-TS-2	B DIM	C DIM MAX	D DIA	E DIM	F THREAD x1-6g-0.100R
9	.6250	.945(24.0)	1.090(27.7)	.698(17.7)	.322(8.9)	M17
11	.7500	1.063(27.0)	1.280(32.5)	.822(20.9)	.385(9.8)	M20
13	.8750	1.260(32.0)	1.400(35.6)	1.010(27.6)	.479(12.3)	M25
15	1.0000	1.417(36.0)	1.530(38.9)	1.135(28.8)	.541(13.7)	M28
17	1.1875	1.457(37.0)	1.660(42.2)	1.260(32.0)	.604(15.3)	M32
19	1.2500	1.614(41.0)	1.840(46.7)	1.385(35.2)	.635(16.1)	M35
21	1.3750	1.811(46.0)	1.970(50.5)	1.510(38.4)	.698(17.7)	M38
23	1.5000	1.968(50.0)	2.090(53.1)	1.635(41.5)	.760(19.3)	M41
25	1.6250	2.017(51.2)	2.210(56.1)	1.760(44.7)	.822(20.9)	M44

APPLICATION NOTES

1. Power to a given contact on one end will result in power to contact directly opposite, regardless of identification letter.
2. Hermeticity = less than 1 x 10^{-7} cc/sec at one atmosphere. Not for use in liquid atmosphere.
3. Material/finish:
   Shell, nut – CRES/passivated, carbon steel/fused tin or CRES/nickel per QQ-N-290.
   Contacts – Gold Plated. Pin: alloy 52; Skt.: copper alloy
   Insulator – fused vitreous glass/N.A.
   Seals – fluorosilicone rubber/N.A.
4. Metric dimensions (mm) are indicated in parentheses.

© 2010 Glenair, Inc. CAGE CODE 06324 Printed in U.S.A.

947-112
MIL-DTL-38999 Series III Type
Jam Nut Bulkhead Feed-Thru

Product Series

Finish
See Table II

Shell Size
A - 9
B - 11
C - 13
D - 15
E - 17
F - 19
G - 21
H - 23
J - 25

Alternate Key Position
A, B, C, D,
(Omit for Normal)

Contact Style
P - Pin on Flange Side
S - Socket on Flange Side

947 - 112 M 25 - 24 B P S

Basic Number

Insert Arrangement
Per MIL-DTL-38999 Series III
MIL-STD-1560

Contact Style
P - Pin on Jam Nut Side
S - Socket on Jam Nut Side

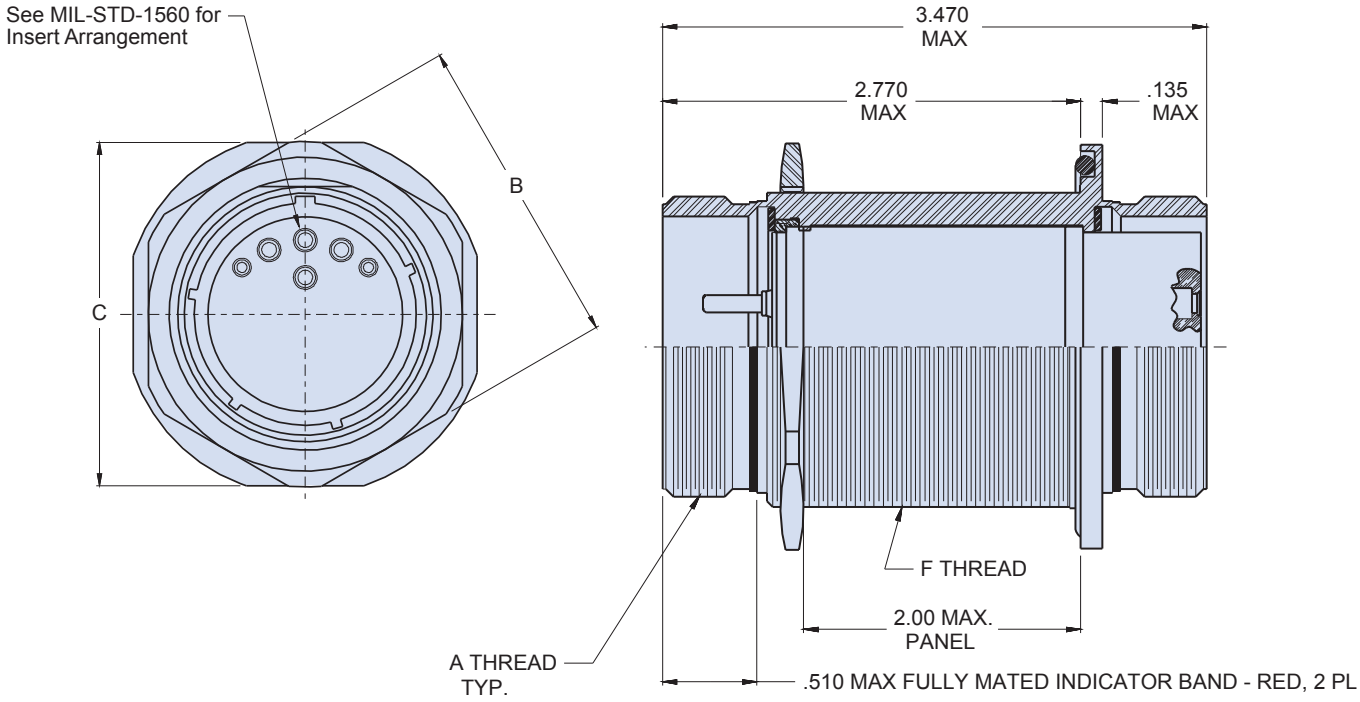

© 2010 Glenair, Inc. CAGE CODE 06324 Printed in U.S.A.

947-112
MIL-DTL-38999 Series III Type
Jam Nut Bulkhead Feed-Thru

Glenair®

TABLE I: CONNECTOR DIMENSIONS

SHELL SIZE	A Thread 0.1P-0.3L-TS-2	B Dimension	C Dimension Max	D Diameter	E Dimension	F Thread x1-6g-0.100R
09	.6250	.875 (22.2)	1.08 (27.4)	6.98 (17.7)	.670 (17.0)	M17
11	.7500	1.000 (25.4)	1.27 (32.3)	.822 (20.9)	.771 (19.6)	M20
13	.8750	1.250 (31.8)	1.39 (35.3)	1.010 (27.6)	.995 (25.3)	M25
15	1.0000	1.375 (34.9)	1.52 (36.9)	1.135 (28.8)	1.085 (27.6)	M28
17	1.1875	1.500 (38.1)	1.64 (41.7)	1.260 (32.0)	1.210 (30.7)	M32
19	1.2500	1.625 (41.3)	1.83 (46.5)	1.385 (35.2)	1.335 (33.9)	M35
21	1.3750	1.750 (44.5)	1.95 (49.5)	1.510 (38.4)	1.460 (37.1)	M38
23	1.5000	1.875 (47.6)	2.08 (52.8)	1.635 (41.5)	1.585 (40.3)	M41
25	1.6250	2.000 (50.8)	2.20 (55.9)	1.760 (44.7)	1.710 (43.4)	M44

TABLE II: MATERIALS AND FINISH

SYM	FINISH
B	Cadmium Plate / Olive Drab
J	Gold Iridite over Cadmium Plate over Nickel
M	Electroless Nickel
N	Cadmium Plate / Olive Drab over Nickel
NF	Cadmium / Olive Drab over Electroless Nickel Nickel (500 Hour Salt Spray)
T	Cadmium Plate / Bright Dip Over Nickel

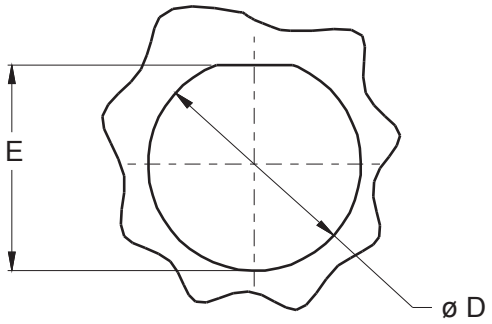

RECOMMENED PANEL CUT-OUT

APPLICATION NOTES

1. Assembly identified with manufacturers name and part number
2. Electrical safety limits must be established by user, peak voltage, switching surge, transient, etc. should be used to determine the safety applications.
3. Material/ Finishes:
   Shells, Jam Nut - AL Alloy
   Insulators- High Grade Rigid Dielectric/ N.A
   Seals- Fluorosilicone/ N.A.

© 2010 Glenair, Inc. CAGE CODE 06324 Printed in U.S.A.

Glenair MIL-DTL-38999 Type Sav-Con® Connector Savers

SECTION G TABLE OF CONTENTS

GLENAIR MIL-DTL-38999 TYPE CONNECTOR SAVERS:

Glenair MIL-DTL-38999 Type Sav-Con® Connector Saver Product Features.....G-1

Sav-Con® Connector Saver Lock Ring Selection and Use.....G-2

MIL-DTL-38999 Sav-Con® Material and Finish Specifications.....G-3

942-003 Series I Type Sav-Con® Plug/Receptacle Connector Saver.....G-4

GC443 Series I Type Sav-Con® Plug/Plug In-Line Connector Saver.....G-6

942-004 Series II Type Sav-Con® Plug/Receptacle Connector Saver.....G-8

942-005 Series III Type Sav-Con® Plug/Receptacle Connector Saver.....G-10

947-221 Series III Type Sav-Con® Plug/Plug In-Line Connector Saver.....G-12

947-139 Series III Type Sav-Con® Pin/Pin or Socket/Socket In-Line Connector Saver.....G-14

942-021 Series III Type Sav-Con® MIL-STD-1760 Connector Saver.....G-16

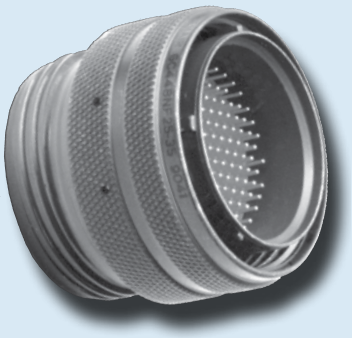

The Smart Solution for Preventing Contact Damage and Extending the Service Life of Cable Assemblies

Product Applications

Glenair Sav-Con® Connector Savers are designed to protect connectors that are subject to repeated mating and unmating cycles. Sav-Con® Connector Savers prevent costly repair or replacement of expensive connectors and cables while preserving the quality and integrity of connector performance. Sav-Con® Connector Savers take the abuse of repeated connection cycles instead of "black box" or other equipment connectors. Equipment connectors that are mated and unmated frequently during manufacturing, check-out phases and environmental test programs can be protected by Glenair Sav-Con® Connector Savers at considerable savings in time and money.

Glenair Sav-Con® Connector Savers feature one-piece, non-removable pin/socket contacts for maximum reliability and minimum effect on circuit resistance. Each Glenair Sav-Con® Connector Saver series meets the same durability requirements as the Military Specification series with which it mates. The mating portions of the pin-and-socket contacts are in strict compliance with the applicable Military Specification contacts used in each connector series. The one-piece design adds resistance to a circuit equal to a mated pin and socket contact, thus it has little or no effect on sensitive circuits.

When a Sav-Con® Connector Saver is installed between a receptacle and a plug, the effective additional length is less than the length of an equivalent mated plug and receptacle. When using bayonet coupled Sav-Con® Connector Savers, Glenair recommends our Lock Ring design feature in applications where large cable bundles may induce unwanted stress to the coupling mechanism and potential unwanted contact displacement (see page E-2).

Catalog contents—including part numbers, materials and dimensions—are accurate to the best of our ability when we go to print. Even so, customers are advised to consult the factory for the latest specifications, particularly to confirm critical dimensions such as connector lengths, threads, and so on. When errors or mistakes are brought to our attention, corrected content is posted immediately to our website: www.glenair.com.

For MIL-DTL-38999 Series I, II and III Connectors

All Standard Materials and Finish Platings

Environmental and Hermetic Designs Available

Gender Changers

Optional Locking Mechanism

Keyed Polarization

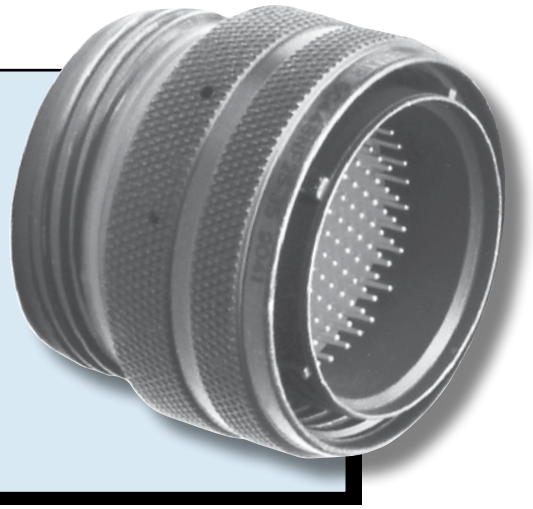

© 2010 Glenair, Inc. CAGE CODE 06324 Printed in U.S.A.

Lock Ring Prevents Accidental Disengagement of Mated Connectors

For Bayonet Coupling Only

The Coupling Nut:

This feature eliminates the wave spring inside the coupling nut, thus providing positive metal-to-metal bottoming out of the plug side of the Sav-Con® Connector Saver to the mating receptacle. This is a desirable option in the following applications:

Locking a Sav-Con® to a receptacle:

Locking a Sav-Con® Connector Saver to a receptacle can prevent accidental or unauthorized unmating. This can insure that the equipment receptacle remains in its unused condition prior to delivery.

Locking a Sav-Con® to reduce lateral forces:

Lateral forces caused by a heavy cable can be reduced when the Sav-Con® Connector Saver is locked to the equipment receptacle. On high-density connectors that have a limited pin-and-socket engagement length, the force applied by a heavy cable can collapse the wave spring and create unwanted discontinuities in the mated contacts.

Locking a Sav-Con® when delivered to end-user:

When equipment is delivered to the end-user, the Sav-Con® Connector Saver may be locked to its mating receptacle to insure that the receptacles mounted on the equipment will remain unused until final installation of the equipment.

Locking a Sav-Con® to a cable mounted plug:

It is often desirable to lock a Sav-Con® Connector Saver on a cable-mounted plug coupler to prevent accidental disconnect of the Sav-Con®.

Sav-Con® Lock Ring Engagement and Disengagement Steps:

1. To engage the plug portion of the saver, first insure that the Lock Ring (2) is in the fully open position by turning the Lock Ring by hand clockwise until it stops.

2. Couple (1) to the Mating receptacle. Note: Pins should be visible in the three holes of the Coupling Ring (1).

3. To lock the Sav-con®, turn the Lock Ring (2) counter-clockwise by hand until it stops. This will seat the bayonet pins.

4. Dis-Engagement is the reverse of steps 3 and 2. Turn Lock Ring (2) to the open position clockwise by hand until it stops. Then rotate the Coupling Ring (1) counter-clockwise until all contacts are separated.

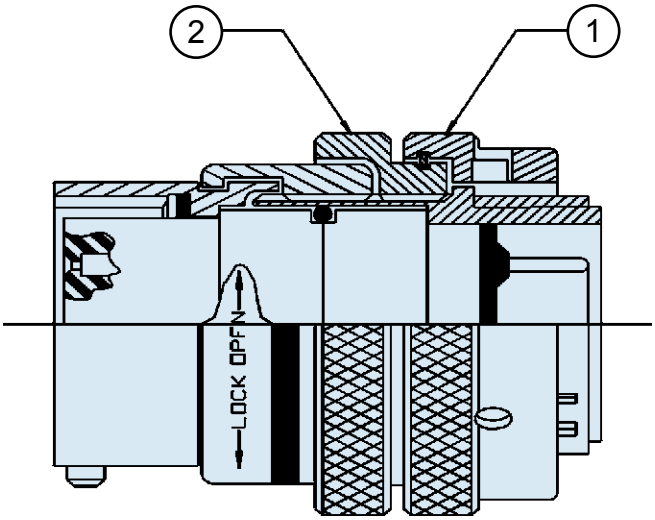

G

© 2010 Glenair, Inc.

GLENAIR, INC. • 1211 AIR WAY • GLENDALE, CA 91201-2497 • 818-247-6000 • FAX 818-500-9912
www.glenair.com
E-Mail: sales@glenair.com

TABLE I: MATERIALS AND FINISHES

Shell, Barrel, and Coupling Nut (Environmental)	Aluminum alloy 6061-T6 per ASTM-B 211, 221
Front and Rear Insulators	Glass-filled liquid crystal polymer (LCP) in accordance with MIL-M-24519, Type GLP-30F
Contact Retention Clip	Beryllium copper, heat-treated, unplated
Grommet, Peripheral Seal and Interfacial Seal	Blended elastomer, 30% silicone per ZZ-R-765, 70% fluorosilicone per MIL-R-25988
Pin / Socket Contacts (Environmental)	Copper Alloy / Gold Plate
Socket Contact Hoods	Corrosion Resistant Steel IAW AISI303 Passivate QQ-P-35
Wave Spring (Bayonet Versions)	Stainless Steel 17-7PH, Condition C Passivate QQ-P-35
EMI Ground Springs	Beryllium Copper, Gold Plate MIL-G-45204
Adhesives	Silicone and epoxy
Potting Compound, PCB and Solder Cup Versions	Environmental and Hermetic Connectors: High-strength epoxy, Hysol EE4215. Filter Connectors: Stycast 2850FT/Catalyst 11 thermally conductive epoxy encapsulant.

TABLE II: MASTER SHELL FINISHES

Plating Code	Material	Finish	Specification
M	Aluminum	Electroless Nickel	AMS-C-26074
B	Aluminum	Cad Plate, Olive Drab	AMS-QQ-P-416, Type II, Class 3
NF	Aluminum	Cadmium Plate Olive Drab over Electroless Nickel	AMS-QQ-P-416, over AMS-C-26074 (1000 Hour Salt Spray)
NC	Aluminum	Zinc-Cobalt	ASTMB840
ZN	Aluminum	Olive Drab Zinc-Nickel	Zinc alloy per ASTM B841-91, Class 1 Type E Grade 3 over Electroless nickel per ASTM B733-90 SC2, Type 1 Class 5
MT	Aluminum	Ni-PTFE *1000 Hour Grey™* (Nickel Flourocarbon Polymer)	MIL-DTL-38999L (500 Hour Salt Spray)

© 2010 Glenair, Inc.

GLENAIR, INC. • 1211 AIR WAY • GLENDALE, CA 91201-2497 • 818-247-6000 • FAX 818-500-9912
www.glenair.com
E-Mail: sales@glenair.com

942-003
Sav-Con® Connector Saver Plug/Receptacle
for Use with MIL-DTL-38999 Series I

Product Series
942 - Connector Saver

Basic Part Number

Shell Size

Contact Gender
P - Pins on Plug Side, Sockets on Receptacle Side
S - Sockets on Plug Side, Pins on Receptacle Side

942 L 003 M 17 - 35 P A

Lock Ring
L - Lock Ring (Standard)

Finish Symbol
(See Table II)

Insert Arrangement
MIL-DTL-38999 Series I
MIL-STD-1560

Alternate Positions:
A, B, C, D
(*N* = Normal)

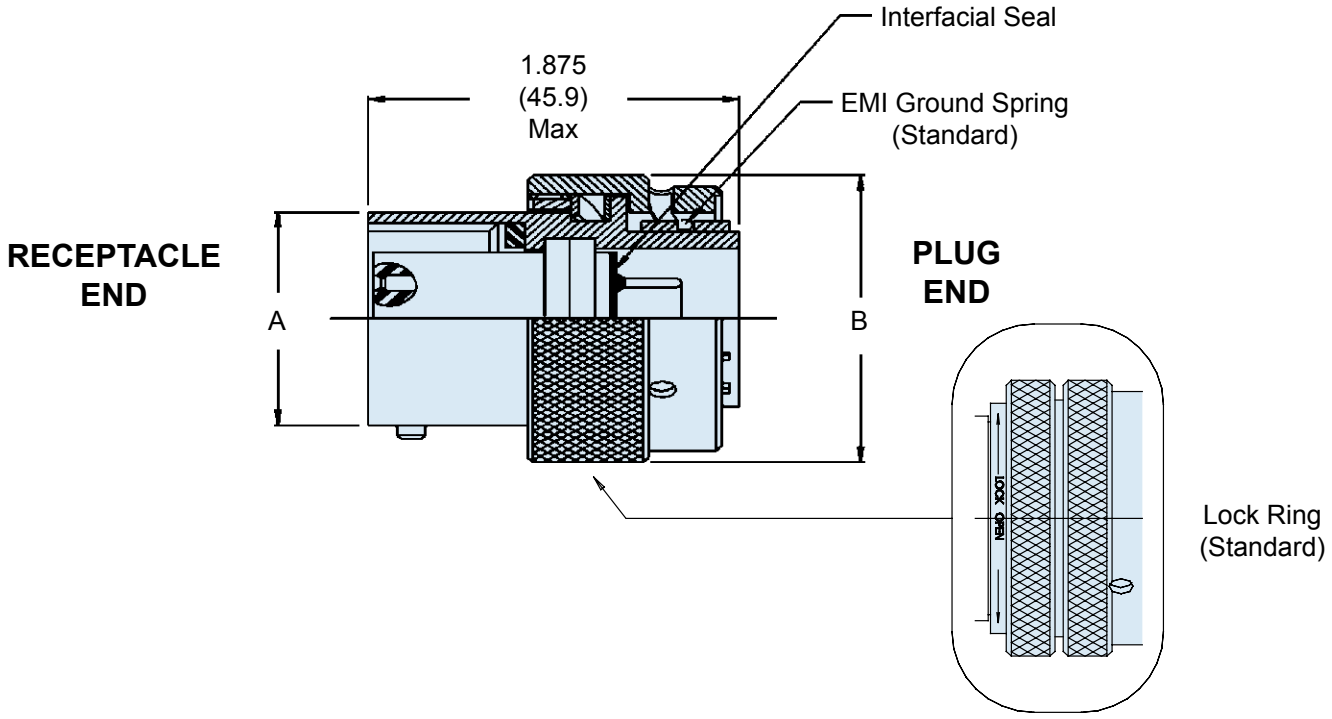

G

© 2010 Glenair, Inc.
CAGE CODE 06324
Printed in U.S.A.

942-003
Sav-Con® Connector Saver Plug/Receptacle
for Use with MIL-DTL-38999 Series I

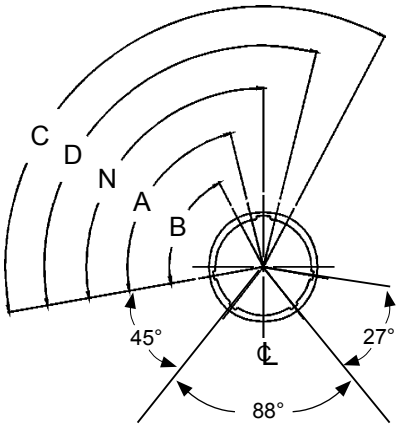

FACE VIEW
RECEPTACLE

SERIES I: ALTERNATE KEYWAY POSITIONS					
SHELL SIZE	N°	A°	B°	C°	D°
09	95	77	--	--	113
11	95	81	67	123	109
13	95	75	63	127	115
15	95	74	61	129	116
17	95	77	85	125	113
19	95	77	65	125	113
21	95	77	65	125	113
23	95	80	69	121	110
25	95	80	69	121	110

TABLE II: SHELL FINISHES		
Plating Code	Material	Finish
M	Aluminum	Electroless Nickel
B	Aluminum	Cad Plate, Olive Drab
NF	Aluminum	Cadmium Plate Olive Drab over Electroless Nickel
NC	Aluminum	Zinc-Cobalt
ZN	Aluminum	Olive Drab Zinc-Nickel
MT	Aluminum	Ni-PTFE *1000 Hour Grey*™ (Nickel Flourocarbon Polymer)

TABLE I: CONNECTOR DIMENSIONS		
SHELL SIZE	A Max	B Diameter Max
09	.573 (14.6)	.910 (23.1)
11	.701 (17.8)	1.035 (26.3)
13	.851 (21.6)	1.210 (30.7)
15	.976 (24.8)	1.330 (33.8)
17	1.101 (28.0)	1.455 (37.0)
19	1.208 (30.7)	1.570 (39.9)
21	1.333 (33.9)	1.695 (43.1)
23	1.458 (37.0)	1.800 (45.7)
25	1.583 (40.2)	1.925 (48.9)

© 2010 Glenair, Inc. CAGE CODE 06324 Printed in U.S.A.

GC443
In-Line/Flange Mount Receptacle • Plug/Plug
MIL-DTL-38999 Series I Type

Product Series

Style
A

Shell Size
09
11
13
15
17
19
21
23
25

Alternate Key Position
A, B, C, D,
(***N*** = Normal)

GC443 - A NF 21 - 35 B

Connector Material and Finish
See Table II for Options

Insert Arrangement
MIL-DTL-38999 Series I
MIL-STD-1560

Syle A
In-Line

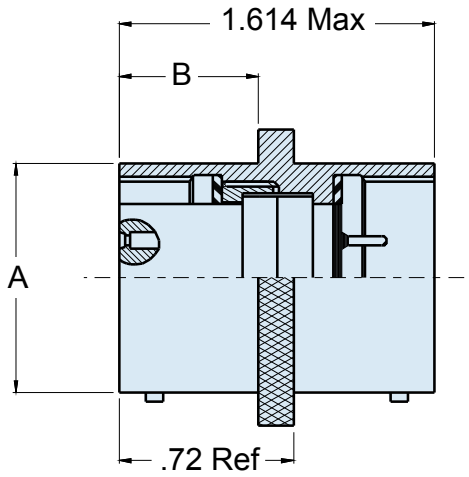

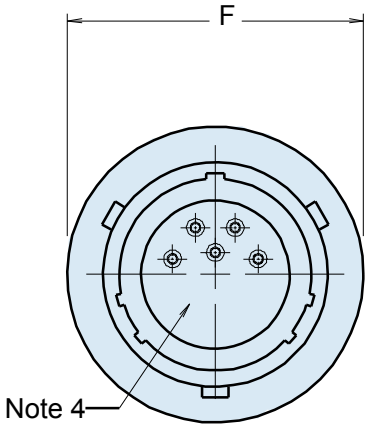

G

APPLICATION NOTES

1. Assembly identified with manufacturer's name and part number, space permitting
2. Material/finish:
   Shell assembly—Al alloy/see Table II
   Bayonet pins—CRES/passivate
   Contacts—copper alloy/gold plate
   Insulators—high-grade rigid dielectric/N.A.
   Interfacial & peripheral seals—silicone/ N.A.
3. Metric Dimensions (mm) are indicated in parentheses
4. See MIL-DTL-38999 for Insert Arrangements

© 2010 Glenair, Inc. CAGE CODE 06324 Printed in U.S.A.

TABLE II: SHELL FINISHES

Plating Code	Material	Finish
M	Aluminum	Electroless Nickel
B	Aluminum	Cad Plate, Olive Drab
NF	Aluminum	Cadmium Plate Olive Drab over Electroless Nickel
NC	Aluminum	Zinc-Cobalt
ZN	Aluminum	Olive Drab Zinc-Nickel
MT	Aluminum	Ni-PTFE *1000 Hour Grey™* (Nickel Flourocarbon Polymer)

TABLE I: CONNECTOR DIMENSIONS

SHELL SIZE	A DIA MAX	B DIA MAX	C +.010-.005 (+0.3-0.1)	D DIM	E DIM ±.020(0.5)	F DIA MAX
09	.573(14.6)	.632(16.1)	.128(3.3)	.719(18.3)	.938(23.8)	.859(21.8)
11	.701(17.8)	.632(16.1)	.128(3.3)	.812(20.6)	1.031(26.2)	.984(25.0)
13	.851(21.6)	.632(16.1)	.128(3.3)	.906(23.0)	1.125(28.6)	1.156(29.4)
15	.976(24.8)	.632(16.1)	.128(3.3)	.969(24.6)	1.219(31.0)	1.281(32.5)
17	1.101(28.0)	.632(16.1)	.128(3.3)	1.062(27.0)	1.312(33.3)	1.406(35.7)
19	1.208(30.7)	.632(16.1)	.128(3.3)	1.156(29.4)	1.438(36.5)	1.516(38.5)
21	1.333(33.9)	.602(15.3)	.147(3.7)	1.250(31.8)	1.562(39.7)	1.641(41.7)
23	1.458(37.0)	.602(15.3)	.147(3.7)	1.375(34.9)	1.688(42.9)	1.766(44.9)
25	1.583(40.2)	.602(15.3)	.147(3.7)	1.500(38.1)	1.812(46.0)	1.891(48.0)

© 2010 Glenair, Inc. CAGE CODE 06324 Printed in U.S.A.

942-004
Sav-Con® Connector Saver Plug/Receptacle
for Use with MIL-DTL-38999 Series II

Product Series
942 - Connector Saver

Basic Part Number

Shell Size
08
10
12
14
16
18
20
22
24

Insert Arrangement
MIL-DTL-38999 Series II
MIL-STD-1560

Contact Gender
P - Pins on Plug Side, Sockets on Receptacle Side
S - Sockets on Plug Side, Pins on Receptacle Side

942	L	004	M	16	G	35	P	A

Lock Ring
L - Lock Ring (Standard)

Finish Symbol
(SeeTable II)

Ground Spring
G - EMI Ground Spring
(Standard)

Alternate Positions:
A, B, C, D
(*N* = Normal)

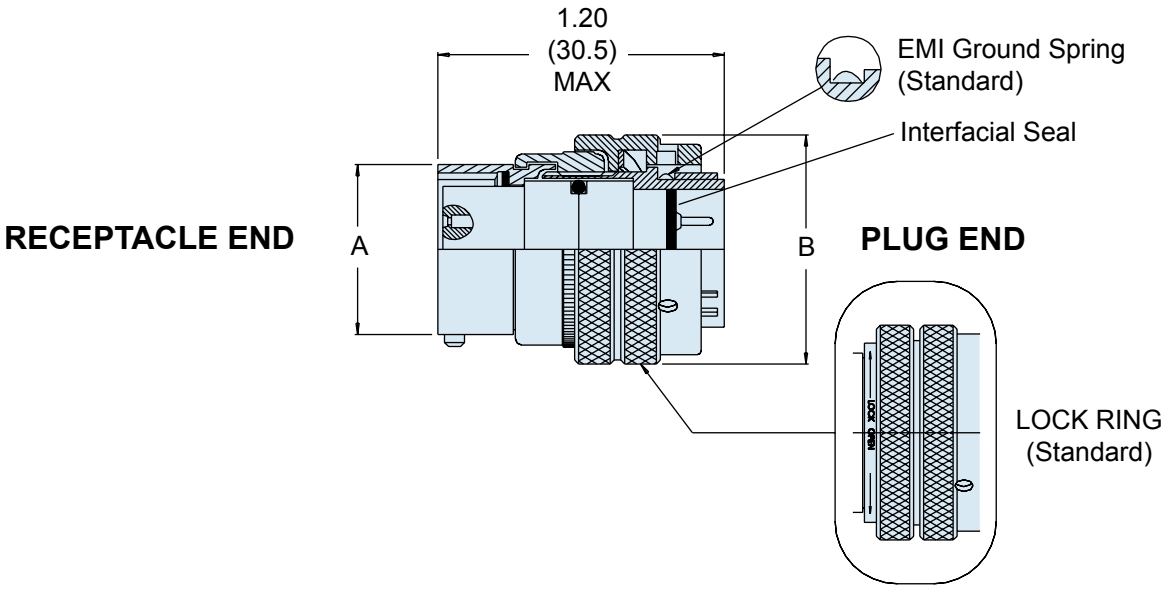

G

© 2010 Glenair, Inc.
CAGE CODE 06324
Printed in U.S.A.

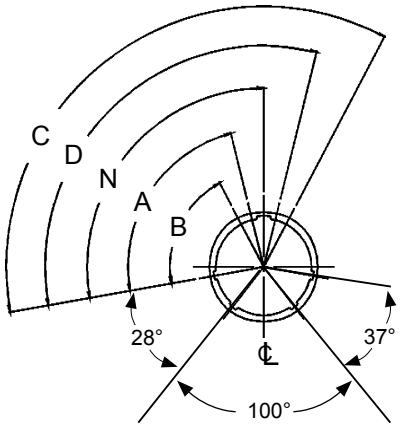

FACE VIEW
RECEPTACLE

SERIES II: ALTERNATE KEYWAY POSITIONS					
SHELL SIZE	N°	A°	B°	C°	D°
08	100	82	--	--	118
10	100	86	72	128	114
12	100	80	68	132	120
14	100	79	66	134	121
16	100	82	70	130	118
18	100	82	70	130	118
20	100	82	70	130	118
22	100	85	74	126	115
24	100	85	74	125	115

TABLE II: SHELL FINISHES		
Plating Code	Material	Finish
M	Aluminum	Electroless Nickel
B	Aluminum	Cad Plate, Olive Drab
NF	Aluminum	Cadmium Plate Olive Drab over Electroless Nickel
NC	Aluminum	Zinc-Cobalt
ZN	Aluminum	Olive Drab Zinc-Nickel
MT	Aluminum	Ni-PTFE *1000 Hour Grey*™ (Nickel Flourocarbon Polymer)

TABLE I: CONNECTOR DIMENSIONS		
SHELL SIZE	A MAX.	B MAX.
08	.474 (12.0)	.750 (19.1)
10	.591 (15.0)	.859 (21.8)
12	.751 (19.1)	1.031 (26.2)
14	.875 (22.2)	1.156 (29.4)
16	1.001 (25.4)	1.281 (32.5)
18	1.126 (28.6)	1.406 (35.7)
20	1.251 (31.8)	1.531 (38.9)
22	1.376 (35.0)	1.656 (42.1)
24	1.501 (38.1)	1.777 (45.1)

© 2010 Glenair, Inc. CAGE CODE 06324 Printed in U.S.A.

942-005
Sav-Con® Connector Saver Plug/Receptacle
for Use with MIL-DTL-38999 Series III

Product Series
942 - Connector Saver

Basic Number

Shell Size Code

Insert Arrangement
MIL-DTL-38999 Series III
MIL-STD-1560

Alternate positions:
A, B, C, D, E
(Omit for Normal)

942 - 005 NF B - 35 P B

Connector Material and Finish
See Table II

P - Pins, plug side
S - Sockets, plug side

TABLE I: CONNECTOR DIMENSIONS			
SHELL SIZE	SHELL SIZE CODE	A THREAD 0.1P-0.3L-TS-2	B DIA MAX
09	A	.6250	.859
11	B	.7500	.969
13	C	.8750	1.141
15	D	1.0000	1.266
17	E	1.1875	1.391
19	F	1.2500	1.500
21	G	1.3750	1.625
23	H	1.5000	1.750
25	J	1.6250	1.875

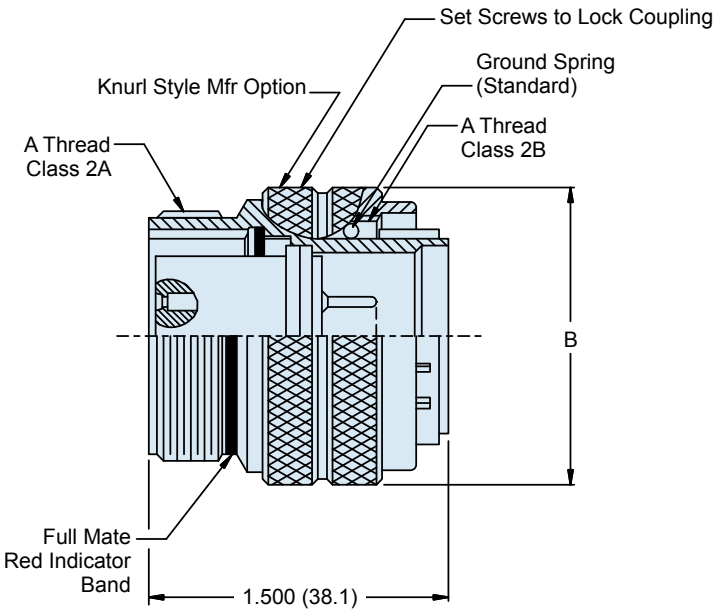

APPLICATION NOTES

1. Assembly features straight-thru double ended socket contacts. Power to a given contact on one end will result in power to contact directly opposite regardless of identification.
2. Metric dimensions (mm) are indicated in parentheses.
3. Material/finish:
   Barrel/shell, coupling nut, lock ring—Al alloy
   Contacts, grounding ring—Copper Al alloy/gold plate
   Detent spring—Corrosion resistant material
   Retaining device—CRES/passivate
   O-ring, interfacial & peripheral seals—Fluorosilicone/N.A.
   Insulators—High grade rigid dielectric/ N.A.

© 2010 Glenair, Inc. CAGE CODE 06324 Printed in U.S.A.

942-005
Sav-Con® Connector Saver Plug/Receptacle
for Use with MIL-DTL-38999 Series III

Glenair®

TABLE II: SHELL FINISHES

Plating Code	Material	Finish
M	Aluminum	Electroless Nickel
B	Aluminum	Cad Plate, Olive Drab
NF	Aluminum	Cadmium Plate Olive Drab over Electroless Nickel
NC	Aluminum	Zinc-Cobalt
ZN	Aluminum	Olive Drab Zinc-Nickel
MT	Aluminum	Ni-PTFE *1000 Hour Grey™* (Nickel Flourocarbon Polymer)

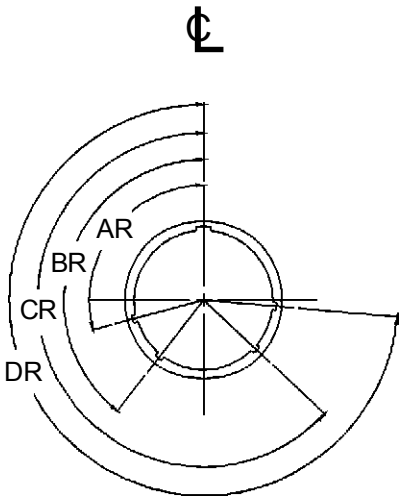

FACE VIEW
RECEPTACLE

SERIES III: ALTERNATE KEYWAY POSITIONS

Shell Size Code	Shell Size Ref	Alternate Keyway Code	AR°	BR°	CR°	DR°
A	09	N	105	140	215	265
		A	102	132	248	320
		B	80	118	230	312
		C	35	140	205	275
		D	64	155	234	304
		E	91	131	197	240
B C D	11 13 15	N	95	141	208	236
		A	113	156	182	292
		B	90	145	195	252
		C	53	156	220	255
		D	119	146	176	298
		E	51	141	184	242
E F	17 19	N	80	142	196	293
		A	135	170	200	310
		B	49	169	200	244
		C	66	140	200	257
		D	62	145	180	280
		E	79	153	197	272
G H J	21 23 25	N	80	142	196	293
		A	135	170	200	310
		B	49	169	200	244
		C	66	140	200	257
		D	62	145	180	280
		E	79	153	197	272

© 2010 Glenair, Inc. CAGE CODE 06324 Printed in U.S.A.

947-221
Sav-Con® Connector Saver Plug/Plug In-Line Connector
for Use with MIL-DTL-38999 Series III

Product Series
947 - Connector Saver

Basic Number

Shell Size

Insert Arrangement
MIL-DTL-38999 Series III
MIL-STD-1560

Alternate positions:
A, B, C, D, E
(*N* = Normal)

947 - 221 NF 15 - 35 PP B

Connector Material and Finish
See Table II

PP - Pin/Pin Contacts
SS - Socket/Socket Contacts
PS - Pin/Socket Contacts

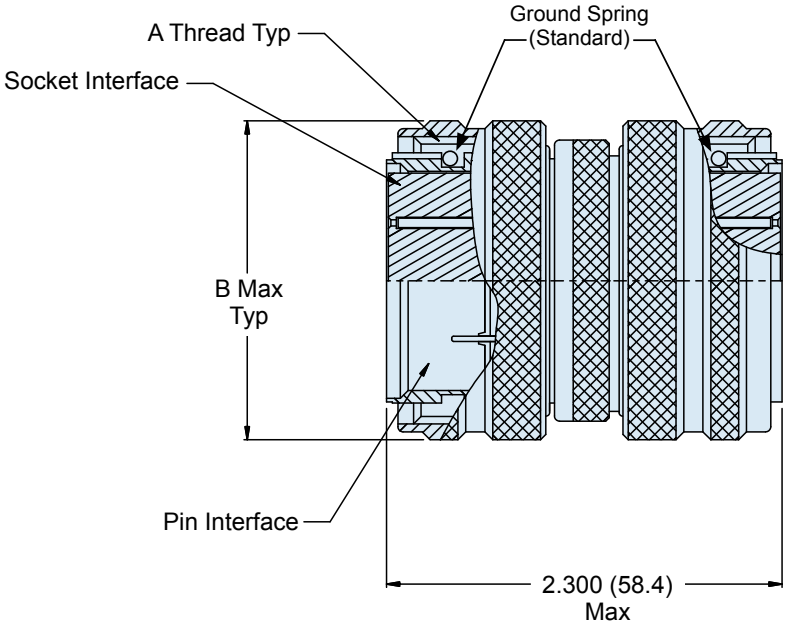

TABLE I: CONNECTOR DIMENSIONS

SHELL SIZE	A THREAD 0.1 P-0.3L-TS-2	B DIA MAX
09	0.6250	.859(21.8)
11	0.7500	.969(24.6)
13	0.8750	1.141(29.0)
15	1.0000	1.266(32.2)
17	1.1875	1.391(35.3)
19	1.2500	1.500(38.1)
21	1.3750	1.625(41.3)
23	1.5000	1.750(44.5)
25	1.6250	1.875(47.6)

APPLICATION NOTES

1. Assembly features straight-thru double-ended contacts, power to a given contact on one end will result in power to contact directly opposite, regardless of identification.
2. Symetrical layout only, Consult factory for available insert arrangements.
3. Metric dimensions (mm) are indicated in parentheses.
4. Material/finish:
   Barrel, adapter, junction nuts, coupling nuts—Al alloy/see Table I.
   Insulators—High grade rigid dielectric/N.A.
   Contacts—Copper alloy/gold plate

© 2010 Glenair, Inc. CAGE CODE 06324 Printed in U.S.A.

TABLE II: SHELL FINISHES

Plating Code	Material	Finish
M	Aluminum	Electroless Nickel
B	Aluminum	Cad Plate, Olive Drab
NF	Aluminum	Cadmium Plate Olive Drab over Electroless Nickel
NC	Aluminum	Zinc-Cobalt
ZN	Aluminum	Olive Drab Zinc-Nickel
MT	Aluminum	Ni-PTFE *1000 Hour Grey*™ (Nickel Flourocarbon Polymer)

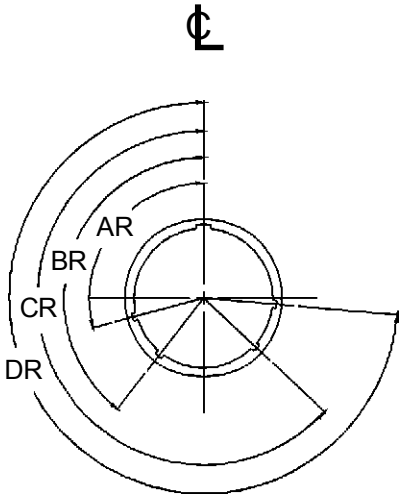

FACE VIEW
RECEPTACLE

SERIES III: ALTERNATE KEYWAY POSITIONS

Shell Size Code	Shell Size Ref	Alternate Keyway Code	AR°	BR°	CR°	DR°
A	09	N	105	140	215	265
		A	102	132	248	320
		B	80	118	230	312
		C	35	140	205	275
		D	64	155	234	304
		E	91	131	197	240
B C D	11 13 15	N	95	141	208	236
		A	113	156	182	292
		B	90	145	195	252
		C	53	156	220	255
		D	119	146	176	298
		E	51	141	184	242
E F	17 19	N	80	142	196	293
		A	135	170	200	310
		B	49	169	200	244
		C	66	140	200	257
		D	62	145	180	280
		E	79	153	197	272
G H J	21 23 25	N	80	142	196	293
		A	135	170	200	310
		B	49	169	200	244
		C	66	140	200	257
		D	62	145	180	280
		E	79	153	197	272

© 2010 Glenair, Inc. CAGE CODE 06324 Printed in U.S.A.

947-139
Sav-Con® Connector Saver In-Line Connector
for Use with MIL-DTL-38999 Series III

Product Series
947 - Connector Saver

Basic Number

Shell Size

Insert Arrangement
MIL-DTL-38999 Series III
MIL-STD-1560

Side "B"
S - Sockets
P - Pin Contacts
Alternate Positions per MIL-DTL-38999:
A, B, C, D, E or N

947 - 139 NF 21 - 35 SE SN

Connector Material and Finish
See Table II for Options

Side "A"
S - Sockets
P - Pin Contacts
Alternate Positions per MIL-DTL-38999:
A, B, C, D, E or N

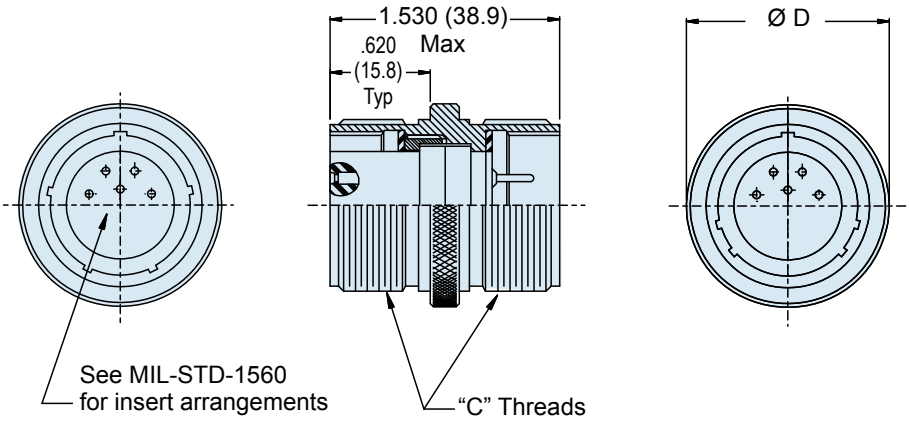

TABLE I: CONNECTOR DIMENSIONS

SHELL SIZE	C THREAD	Ø D MAX
09	.625-1P-.3L-2A	.859
11	.750-1P-.3L-2A	.984
13	.875-1P-.3L-2A	1.156
15	1.000-1P-.3L-2A	1.281
17	1.187-1P-.3L-2A	1.406
19	1.250-1P-.3L-2A	1.516
21	1.375-1P-.3L-2A	1.641
23	1.500-1P-.3L-2A	1.766
25	1.625-1P-.3L-2A	1.891

APPLICATION NOTES

1. For pin/pin and skt/skt symmetrical layouts only. Consult factory for available insert arrangements.
2. Power to a given contact on one end will result in power to the contact directly opposite, regardless of identification marking.
3. Metric dimensions (mm) are indicated in parentheses.
4. Material/finish:
   Shell assembly—Al alloy/see Table II
   Contacts—Copper alloy/gold plate
   Insulators—High-grade rigid dielectric/ N.A.
   Seals—Silicone/ N.A

© 2010 Glenair, Inc. CAGE CODE 06324 Printed in U.S.A.

TABLE II: SHELL FINISHES

Plating Code	Material	Finish
M	Aluminum	Electroless Nickel
B	Aluminum	Cad Plate, Olive Drab
NF	Aluminum	Cadmium Plate Olive Drab over Electroless Nickel
NC	Aluminum	Zinc-Cobalt
ZN	Aluminum	Olive Drab Zinc-Nickel
MT	Aluminum	Ni-PTFE *1000 Hour Grey™* (Nickel Flourocarbon Polymer)

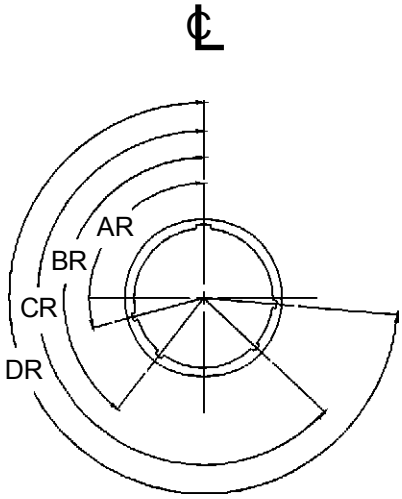

FACE VIEW
RECEPTACLE

SERIES III: ALTERNATE KEYWAY POSITIONS

Shell Size Code	Shell Size Ref	Alternate Keyway Code	AR°	BR°	CR°	DR°
A	09	N	105	140	215	265
		A	102	132	248	320
		B	80	118	230	312
		C	35	140	205	275
		D	64	155	234	304
		E	91	131	197	240
B C D	11 13 15	N	95	141	208	236
		A	113	156	182	292
		B	90	145	195	252
		C	53	156	220	255
		D	119	146	176	298
		E	51	141	184	242
E F	17 19	N	80	142	196	293
		A	135	170	200	310
		B	49	169	200	244
		C	66	140	200	257
		D	62	145	180	280
		E	79	153	197	272
G H J	21 23 25	N	80	142	196	293
		A	135	170	200	310
		B	49	169	200	244
		C	66	140	200	257
		D	62	145	180	280
		E	79	153	197	272

© 2010 Glenair, Inc. CAGE CODE 06324 Printed in U.S.A.

942-021
Sav-Con® Connector Saver
MIL-STD-1760
For Use With MIL-DTL-38999 Series III

Product Series
942 - Connector Saver

Connector Material and Finish
See Table II for Options

Insert Arrangement
(Per MIL-STD-1560)

Alternate positions:
A, B, C, D, E
(*N* = Normal)

942	-	021	NF	25	-	20	P	A	X

Basic Number

Shell Size

P - Pins, plug side
S - Sockets, plug side

If using fiber optics in channels *U* and *Y*
(Supplied w/o electrical contacts in these cavities)
Omit for non-fiber use

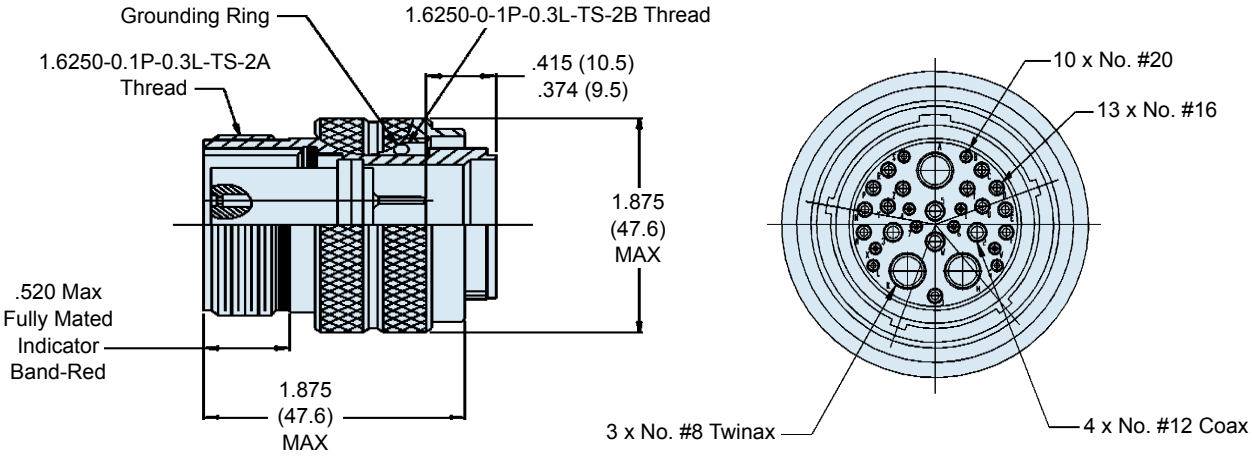

25-20 INSERT ARRANGEMENT

SHELL SIZE CODE	SHELL SIZE	INSERT ARRANGEMENT DASH NO.	TOTAL NUMBER OF CONTACTS	CONTACT SIZE			
				20	16	12 (Coax)	8 (Twinax)
				QUANTITY			
J	25	25-20	30	10	13	4	3

APPLICATION NOTES

1. All set screws to have N.D. Ind. Stud grade threadlocker #140500 (jet fuel resistant).
2. Metric dimensions (mm) are indicated in parentheses.
3. Material/finish:
   Barrel/shell, coupling nut, lock ring – CRES Passivated

Contacts – Copper alloy/gold plate
Interfacial & peripheral seals – silicone/N.A.
Insulators – High grade rigid dielectric/ N.A.
Shrink Tube – See Table I

© 2010 Glenair, Inc. CAGE CODE 06324 Printed in U.S.A.

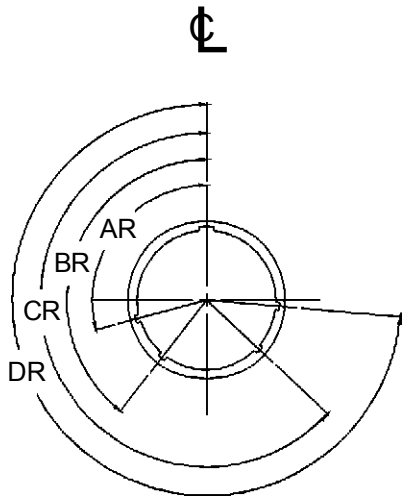

FACE VIEW
RECEPTACLE

SERIES III: ALTERNATE KEYWAY POSITIONS						
Shell Size Code	Shell Size Ref	Alternate Keyway Code	AR°	BR°	CR°	DR°
J	25	N	80	142	196	293
		A	135	170	200	310
		B	49	169	200	244
		C	66	140	200	257
		D	62	145	180	280
		E	79	153	197	272

© 2010 Glenair, Inc.

GLENAIR, INC. • 1211 AIR WAY • GLENDALE, CA 91201-2497 • 818-247-6000 • FAX 818-500-9912
www.glenair.com
E-Mail: sales@glenair.com

Glenair Connector Accessories and Tools

SECTION H TABLE OF CONTENTS

GLENAIR Connector Accessories and Tools:

Glenair Connetor Accessories and Tools Product Features....H-1
Glenair MIL-DTL-38999 Type Backshells and Accessories Selection Guide....H-2
Glenair D38999 Type Backshell Interface Dimensions....H-4
770-001 Part Number Development and S-Straight Shrink Boot Heat Shrink Molded Part....H-5
770-001 A -90° Shrink Boot Heat Shrink Molded Part....H-6
770-001 B 45° SHrink Boot Heat Shrink Molded Part....H-7
310-001 O-Ring Sealed Shrink Boot Adapter....H-8
319-064 Composite Swing-Arm Strain Relief with Nickel/Copper EMI/RFI Shield Sock....G-10
319-065 Composite Swing-Arm Strain Relief with Composite EMI/RFI Shield Sock....G-12
Swing-Arm Assembly Instructions....G-14
380-107 EMI/RFI Split-Shell Non-Environmental Backshell with Strain Relief....G-16
380-115 EMI/RFI Low Profile Non-Environmental Backshell with Strain Relief....G-18
440-069 EMI/RFI Shrink Boot Banding Adapter....G-20
447-425 EMI/RFI Non-Environmental Band-In-A-Can Backshell with Strain-Relief....G-22
620-048 Strain Relief Clamp, Straight and 90°....G-24
620-049 Strain Relief Clamp, 45°....G-25
627-122 Composite Swing-Arm Strain Relief....G-26
687-207 Composite MIL-C-85049/93 Banding Split-Ring....G-28
103-026 and -027 AmberStrand® Composite EMI/RFI Braid....G-29
100-001 Tubular Metal Braid QQ-B-575B ASTM B33 Tin Coated Copper....G-30
100-003 Tubular Metal Braid ASTM B355 Class 4 OFHC Nickel Plated Copper....G-31
930-001 Conductive Gasket for Flange Mount Series III Receptacle Connector....G-32
MS85049/94 Full Perimeter Nut Plate....G-34
MS85049/95 3/4 Perimeter Nut Plate....G-35
MS85049/96 1/4 Perimeter Nut Plate....G-36
650FS001 Series I Dummy Stowage Receptacle....G-38
650FS002 Series II Dummy Stowage Receptacle....G-39
650HS010 Series III Dummy Stowage Receptacle....G-40
650HS007 Dummy Stowage Receptacle for MIL-DTL-38999 Series IV Connectors....G-41
660-012 (Plug), 660-013 (Receptacle), 661-002 (EMI Receptacle) Series I Protective Covers....G-42
660-014 (Plug), 660-015 (Receptacle), 661-003 (EMI Receptacle) Series II Protective Covers....G-44
60-023 (Plug), 660-024 (Receptacle) Series III Protective Covers....G-46
60-031 (Plug), 660-032 (Receptacle) Series IV Protective Covers....G-48
TG70 Strap Wrench with 3/8” Square Drive....G-50
BAND-IT® Shield Termination Clamping System....G-51 - G-53
600-004 and 600-007 Bench Mount and Hand Held Torque Wrenches....G-54
600-161 Hand Held Digital Torque Wrench and 600-162 Bench Stand....G55
MIL-DTL-38999 Series I, II, III and IV Connector Holding Tools....G-56 - G-62
600-091 and 600-157 Composite Hex Coupling Wrench....G-63 - G-64

Because the Art of Interconnect Cable Design Calls for More Technology Than Just a Connector

Backshells: A Part of Every Well-Designed Cable Harness and Assembly

Glenair understands that the management of EMI, environmental damage and mechanical stress factors in high-reliability cable assemblies usually requires the incorpoartion if various connector backshells and accessories. We offer thousands of EMI management products, cable-sealing backshells, protective covers, strain-relief devices and other essential accessories. In this section of the book we've organized a small selection of some of the most practical devices used in Mil-Aero cabling. We've chosen the most popular and useful products for assemblies built around the D38999 family.

For example, effective shielding of avionic devices equipped with D38999 signal connectors must anticipate both "radiated susceptibility" (the degree to which outside interference affects the reliable functioning of equipment) and "radiated emissions" (the extent to which the device itself creates electromagnetic waves which can affect its function). In both cases, managing the interference could include both a suitable EMI filtering device but also an appropriate selection of accessories such as shield termination backshells, EMI gaskets and conductive shielding.

For environmental protection, Glenair offers both standard shrink-boot products as well as more robust cable-sealing backshells and protective covers. For mechanical protection we offer a broad range of strain-relief backshells to prevent damage to the conductor-to-contact intertface. Whatever your requirement, Glenair has both the connectors, and the accessories, to put together a finished cable design that meets all the requirements of your application.

Glenair is the world's largest supplier of EMI Shielding backshells, cable sealing backshells and strain-relief devices. Over 65,000 part numbers are in stock and ready for same-day shipment

This section includes just a small selection of the most practical connector accessories designed for use on D38999 connectors

Glenair offers both AS85049 QPL solutions as well as a broad selection of commercial designs for every electrical, mechanical and environmental requirement.

NOTE: *Catalog contents are accurate to the best of our ability when we go to print. When errors or mistakes are brought to our attention, corrected content is posted immediately to our website: www.glenair.com.*

© 2010 Glenair, Inc. CAGE CODE 06324 Printed in U.S.A.

MIL-DTL-38999
Backshells and Accessories Selection Guide

Military Standard Circular Connector Accessories					
Miltary Connector Specifications	Shrink Boot Adapters 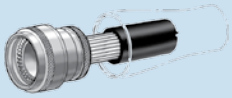	Non Environmental Strain Relief Backshells 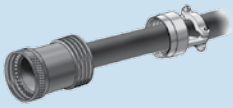	EMI/RFI Non-Environmental Backshells	EMI/RFI Environmental Backshells	Banding Backshells 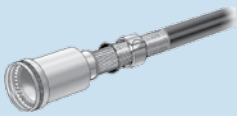
MIL-C-38999 Series I	M85049/62 Straight	M85049/29 Straight	M85049/36 Straight M85049/37 90°	M85049/17 Straight M85049/76 90° M85049/77 45°	M85049/85 Straight M85049/86 45° M85049/87 90°
MIL-C-38999 Series II	M85049/62 Straight	M85049/29 Straight	M85049/36 Straight M85049/37 90°	M85049/17 Straight M85049/76 90° M85049/77 45°	M85049/85 Straight M85049/86 45° M85049/87 90°
MIL-C-38999 Series III	M85049/69 Straight	M85049/21 Straight	M85049/19 Straight	M85049/18 Straight M85049/78 45° M85049/79 90°	M85049/88 Straight M85049/89 45° M85049/90 90°
MIL-C-38999 Series IV	M85049/69 Straight	M85049/21 Straight	M85049/19 Straight	M85049/18 Straight M85049/78 45° M85049/79 90°	M85049/88 Straight M85049/89 45° M85049/90 90°

© 2010 Glenair, Inc. CAGE CODE 06324 Printed in U.S.A.

GLENAIR, INC. • 1211 AIR WAY • GLENDALE, CA 91201-2497 • 818-247-6000 • FAX 818-500-9912
www.glenair.com E-Mail: sales@glenair.com

MIL-DTL-38999
Backshells and Accessories Selection Guide

Glenair®

Military Standard Circular Connector Accessories

Qwick-Ty Strain Reliefs 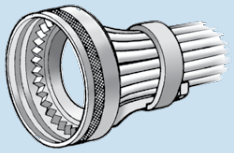		Strain Reliefs 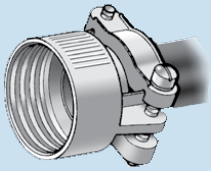		Dummy Stowage Recep-tacles 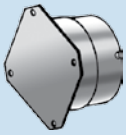	Protective Plug Covers	Protective Receptacle Covers	Military Connector Specifications
Non-Self Locking	*Self Locking*	*Non-Self Locking*	*Self Locking*				
M85049/56 straight M85049/57 45° M85049/58 90°	*No Ground Lug* M85049/56S Straight M85049/57S 45° *W/ Ground Lug* M85049/56G Straight M85049/57G 45°	M85049/45 Straight M85049/46 90° M85049/47 (MS27507) 90° M85049/49 (MS27506) Straight	M85049/47S 90° M85049/49S Straight	M38999/9	MS27501	MS27502	MIL-C-38999 Series I
M85049/56 straight M85049/57 45° M85049/58 90°	*No Ground Lug* M85049/56S Straight M85049/57S 45° *W/ Ground Lug* M85049/56G Straight M85049/57G 45°	M85049/45 Straight M85049/46 90° M85049/47 (MS27507) 90° M85049/49 (MS27506) Straight	M85049/47S 90° M85049/49S Straight	M38999/10	MS27510	MS27511	MIL-C-38999 Series II
M85049/15 45° M85049/16 90°	N/A	M85049/38 Straight M85049/39 90° M85049/91 Straight M85049/92 90°	M85049/38S Straight M85049/39S 90°	M38999/22	D38999/32 Threaded	D38999/33 Threaded	MIL-C-38999 Series III
M85049/15 45° M85049/16 90°	M85049/15 45° M85049/16 90°	M85049/38 Straight M85049/39 90° M85049/91 Straight M85049/92 90°	M85049/38S Straight M85049/39S 90°	M38999/50	N/A	N/A	MIL-C-38999 Series IV

© 2010 Glenair, Inc. CAGE CODE 06324 Printed in U.S.A.

GLENAIR, INC. • 1211 AIR WAY • GLENDALE, CA 91201-2497 • 818-247-6000 • FAX 818-500-9912
www.glenair.com E-Mail: sales@glenair.com

Table I:
Backshell Interface Dimensions

TABLE I: BACKSHELL INTERFACE DIMENSIONS						
CONNECTOR DESIGNATOR		A THREAD REFERENCE	B DIA MAX	C DIA MAX	D DIA MAX	E DIA MAX
F	H					
08 [9]		7/16 – 28 UNEF	.590 (15.)	.650 (16.5)	.770 (19.6)	.690 (17.5)
	09 [A]	M12 x 1 – 6H	.650 (16.5)	.770 (19.6)		.940 (24.8)
10 [11]		9/16 – 24 UNEF	.720 (18.3)	.770 (19.6)	.890 (22.6)	.820 (20.8)
	11 [B]	M15 x 1 – 6H	.770 (19.6)	.820 (20.8)		1.060 (26.9)
12 [13]		11/16 – 24 UNEF	.840 (21.3)	.890 (22.6)	1.020 (25.9)	.940 (23.8)
	13 [C]	M18 x 1 – 6H	.890 (22.6)	.940 (23.9)		1.170 (29.7)
14 [15]		13/16 – 20 UNEF	.970 (24.6)	1.020 (29.2)	1.150 (29.2)	1.060 (26.9)
	15 [D]	M22 x 1 – 6H	1.030 (26.2)	1.070 (26.2)		1.290 (32.7)
16 [17]		15/16 – 20 UNEF	1.090 (27.7)	1.150 (29.2)	1.260 (32.0)	1.170 (29.7)
	17 [E]	M25 x 1 – 6H	1.150 (29.2)	1.210 (30.7)		1.420 (36.1)
18 [19]		1 1/16 – 18 UNEF	1.220 (31.0)	1.230 (31.2)	1.400 (35.6)	1.290 (32.7)
	19 [F]	M28 x 1 – 6H	1.280 (32.5)	1.360 (34.5)		1.540 (39.1)
20 [21]		1 3/16 – 18 UNEF	1.340 (34.0)	1.360 (34.5	1.530 (38.9)	1.420 (36.0)
	21 [G]	M31 x 1 – 6H	1.410 (35.8)	1.480 (37.6)		1.670 (42.4)
22 [23]		1 5/16 – 18 UNEF	1.470 (37.3	1.480 (37.6)	1.600 (40.6)	1.540 (39.1)
	23 [H]	M34 x 1 - 6H	1.530 (38.9)	1.600 (40.6)		2.010 (51.1)
24 [25]		1 7/16 – 18 UNEF	1.590 (40.4)	1.730 (43.9)	1.940 (49.3)	1.660 (42.2)
	25 [J]	M37 x 1 – 6H	1.660 (42.2)	1.700 (43.2)		2.120 (53.8)

© 2010 Glenair, Inc. CAGE CODE 06324 Printed in U.S.A.

Series 77
Straight Shrink Boot
Heat Shrink Molded Part

Product Series

Angular Function
S - Straight

Part Size
(See Table I)

Adhesive Lined
W1 - Zero Halogen
W2 - 80°C Hot Melt
R - 150°C Epoxy Pre-Coat
(Omit for No Adhesive)

770 - 001 S 1 00 W1

Basic Part Number
001 - Lipped Boot with Eyelet (Boot Size 03-09)
002 - Short Lipped Boot with Eyelet (Boot Size 03-09)
003 - Lipped Boot (Boot Size 00-08)
004 - Short Lipped Boot (Boot Size 00-08)
005 - Non-Lipped Boot (Boot Size 00-08)

Material
1 - 150°C Compound 2025 Elastomeric Oil Resistant and Flame Retardant
2 - Low Smoke Hazard Material
3 - Flexible Polyolefin

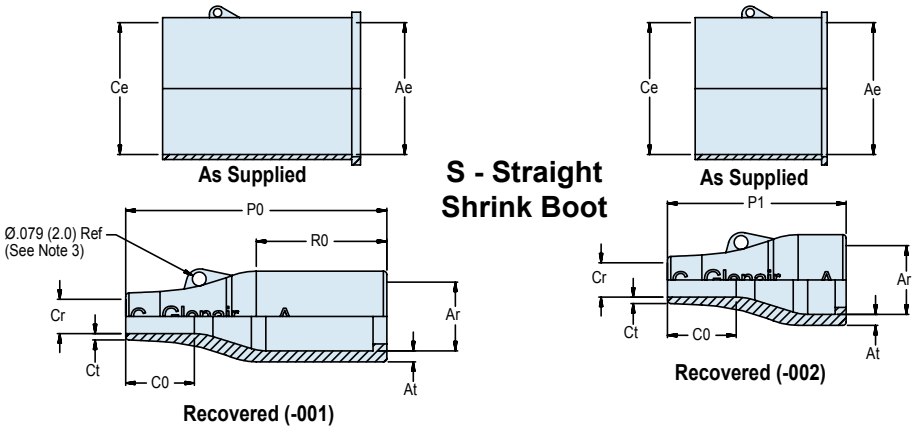

TABLE I: STRAIGHT BOOT DIMENSIONS, BOOT AND SHELL SIZE

Boot Size	Shell Size	Ae Dia Min	Ce Dia Min	Ar Dia Max	at ±30%	Cr Dia Max	ct ±20%	C0 Ref	P0 ±10%	P1 ±10%	R0 Ref
00	5	.354 (9.0)	.354 (9.0)	.217 (5.5)	.039 (1.0)	.079 (2.0)	.028 (0.7)	.295 (7.5)	.984 (25.0)	N/A	.551 (14.0)
01	5, 6	.472 (12.0)	.472 (12.0)	.276 (7.0)	.043 (1.1)	.118 (3.0)	.028 (0.7)	.295 (7.5)	.984 (25.0)	N/A	.551 (14.0)
02	6, 7	.669 (17.0)	.669 (17.0)	.276 (7.0)	.051 (1.3)	.138 (3.5)	.028 (0.7)	.395 (10.0)	1.181 (30.0)	N/A	.728 (18.5)
03	8, 10	.945 (24.0)	.945 (24.0)	.413 (10.5)	.063 (1.6)	.197 (5.5)	.035 (0.9)	.395 (10.0)	1.496 (38.0)	1.024 (26.0)	.748 (19.0)
04	11-16	1.181 (30.0)	1.181 (30.0)	.551 (14.0)	.071 (1.8)	.236 (6.0)	.039 (1.0)	.630 (16.0)	2.165 (55.0)	1.693 (43.0)	1.181 (30.0)
05	16-17	1.260 (32.0)	1.260 (32.0)	.709 (18.0)	.071 (1.8)	.276 (7.0)	.047 (1.2)	.748 (19.0)	2.638 (67.0)	1.850 (47.0)	1.299 (33.0)
06	17-21	1.417 (36.0)	1.417 (36.0)	.886 (22.0)	.079 (2.0)	.335 (8.5)	.047 (1.2)	.787 (20.0)	3.150 (80.0)	2.362 (60.0)	1.575 (40.0)
07	21-23	1.693 (43.0)	1.693 (43.0)	1.102 (28.0)	.087 (2.2)	.394 (10.0)	.051 (1.3)	1.142 (29.0)	3.898 (99.0)	3.150 (80.0)	2.165 (55.0)
08	25	2.362 (60.0)	2.362 (60.0)	1.378 (35.0)	.130 (3.3)	.591 (15.0)	.063 (1.6)	1.575 (40.0)	5.118 (130.0)	4.331 (110.0)	1.969 (50.0)

APPLICATION NOTES

1. Material: Fluid resistant elastomer - Glenair Material Type 1.
2. When the minimum number of conductors are used, wire bundle/cable may require build-up to B^2 max.
3. Sizes 00 to 02 do not contain eyelet.

© 2010 Glenair, Inc. CAGE CODE 06324 Printed in U.S.A.

Series 77
90° Shrink Boot
Heat Shrink Molded Part

Product Series

Angular Function
A - 90°

Part Size
(See Table I)

Adhesive Lined
W1 - Zero Halogen
W2 - 80°C Hot Melt
R - 150°C Epoxy Pre-Coat
(Omit for No Adhesive)

770 - 001 A 1 00 W1

Basic Part Number
001 - Lipped Boot with Eyelet (Boot Size 03-08)
003 - Lipped Boot (Boot Size 00-08)
005 - Non-Lipped Boot (Boot Size 00-08)

Material
1 - 150°C Compound 2025 Elastomeric Oil Resistant and Flame Retardant
2 - Low Smoke Hazard Material
3 - Flexible Polyolefin

A - 90°
Shrink Boot

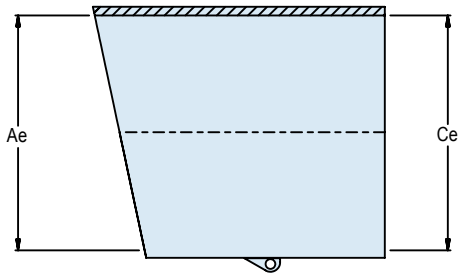

As Supplied

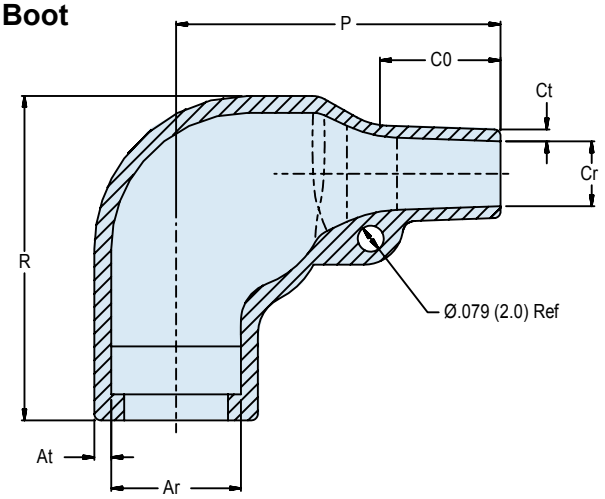

Size 03 To 08
Recovered

TABLE I: 90° BOOT DIMENSIONS, BOOT AND SHELL SIZE

Boot Size	Shell Size	Ae Dia Min	Ce Dia Min	Ar Dia Max	at ±30%	Cr Dia Max	ct ±20%	C0 Ref	P ±20%	R Ref
03	9	.945 (24.0)	.945 (24.0)	.394 (10.0)	.063 (1.6)	.197 (5.0)	.035 (0.9)	.394 (10.0)	.984 (25.0)	.984 (25.0)
04	11-15	1.181 (30.0)	1.181 (30.0)	.532 (13.5)	.071 (1.8)	.217 (5.5)	.039 (1.0)	.472 (12.0)	1.260 (32.0)	1.063 (27.0)
05	13-17	1.260 (32.0)	1.260 (32.0)	.709 (18.0)	.071 (1.8)	.276 (7.0)	.047 (1.2)	.591 (15.0)	1.535 (39.0)	1.260 (32.0)
06	17-21	1.417 (36.0)	1.417 (36.0)	.886 (22.0)	.079 (2.0)	.335 (8.5)	.047 (1.2)	.630 (16.0)	1.929 (49.0)	1.496 (38.0)
07	21-23	1.693 (43.0)	1.693 (43.0)	1.102 (28.0)	.087 (2.2)	.394 (10.0)	.059 (1.5)	.709 (18.0)	2.165 (55.0)	1.850 (47.0)
08	23-25	2.165 (55.0)	2.165 (55.0)	1.378 (35.0)	.130 (3.3)	.591 (15.0)	.079 (2.0)	1.260 (32.0)	3.150 (80.0)	2.165 (55.0)

© 2010 Glenair, Inc. CAGE CODE 06324 Printed in U.S.A.

GLENAIR, INC. • 1211 AIR WAY • GLENDALE, CA 91201-2497 • 818-247-6000 • FAX 818-500-9912
www.glenair.com E-Mail: sales@glenair.com

Series 77
45° Shrink Boot
Heat Shrink Molded Part

Product Series

Angular Function
B - 45°

Part Size
(See Table I)

Adhesive Lined
W1 - Zero Halogen
W2 - 80°C Hot Melt
R - 150°C Epoxy Pre-Coat
(Omit for No Adhesive)

770 - 001 B 1 00 W1

Basic Part Number
001 - Lipped Boot with Eyelet (Boot Size 03-09)
003 - Lipped Boot (Boot Size 00-08)
005 - Non-Lipped Boot (Boot Size 00-08)

Material
1 - 150°C Compound 2025 Elastomeric Oil Resistant and Flame Retardant
2 - Low Smoke Hazard Material
3 - Flexible Polyolefin

B - 45°
Shrink Boot

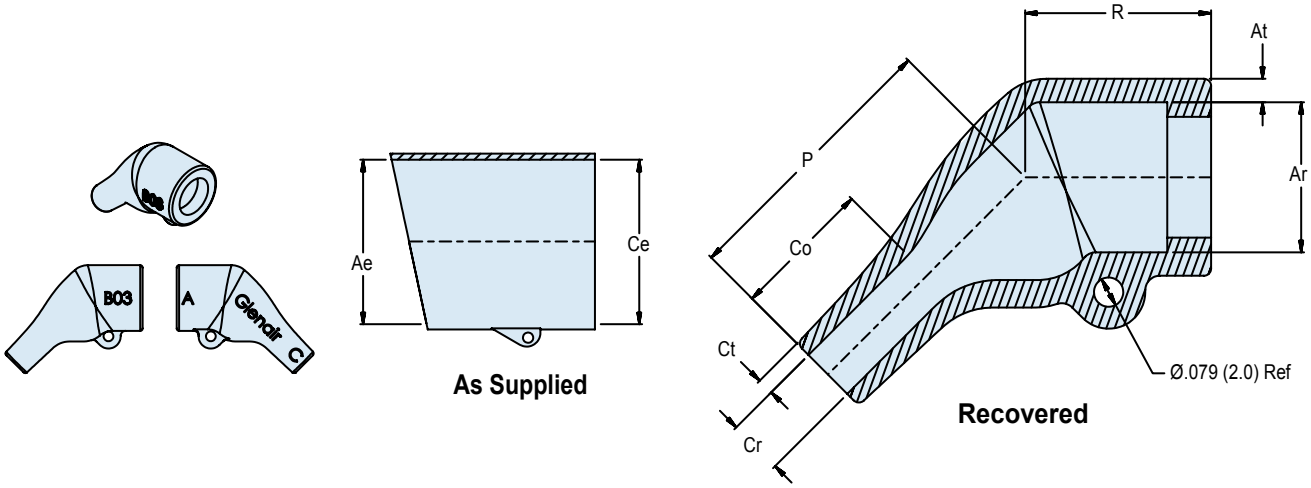

TABLE I: 45° BOOT DIMENSIONS, BOOT AND SHELL SIZE

Boot Size	Shell Size	Ae Dia Min	Ce Dia Min	Ar Dia Max	at ±30%	Cr Dia Max	ct ±20%	CO Ref	P ±10%	R Ref
03	9	.945 (24.0)	.945 (24.0)	.413 (10.50)	.063 (1.6)	.157 (4.0)	.035 (0.9)	.315 (8.0)	.748 (195.0)	.500 (12.7)
04	11-15	1.181 (30.0)	1.181 (30.0)	.551 (14.0)	.071 (1.8)	.236 (6.0)	.039 (1.0)	.354 (9.0)	1.180 (30.0)	.748 (19.0)
05	13-17	1.260 (32.0)	1.260 (32.0)	.709 (18.0)	.079 (2.0)	.276 (7.0)	.071 (1.8)	.591 (15.0)	1.378 (35.0)	.984 (25.0)
06	17-21	1.417 (36.0)	1.417 (36.0)	.886 (22.0)	.079 (2.0)	.335 (8.5)	.071 (1.8)	.709 (18.0)	1.575 (40.0)	1.260 (32.0)
07	21-23	1.693 (43.0)	1.693 (43.0)	1.102 (28.0)	.087 (2.2)	.394 (10.0)	.079 (2.0)	.709 (18.0)	1.772 (45.0)	1.496 (38.0)

© 2010 Glenair, Inc. CAGE CODE 06324 Printed in U.S.A.

310-001
O-Ring Sealed Shrink Boot Adapter
Rotatable Coupling - Standard Profile

Connector Designators:

MIL-DTL-38999 Series I, II (F)
MIL-DTL-38999 Series III and IV (H)

F-H

ROTATABLE COUPLING

Product Series	Angular Function	Connector Designator	Basic Number	Finish	Shell Size	Drain Holes	Shrink Boot
310	S	F	001	M	16	D	T
	H, J, or S	*F and H* (See Table III)		(See Table II)	(See Table IV)	(Omit for None)	(See Table III) (Omit for None)

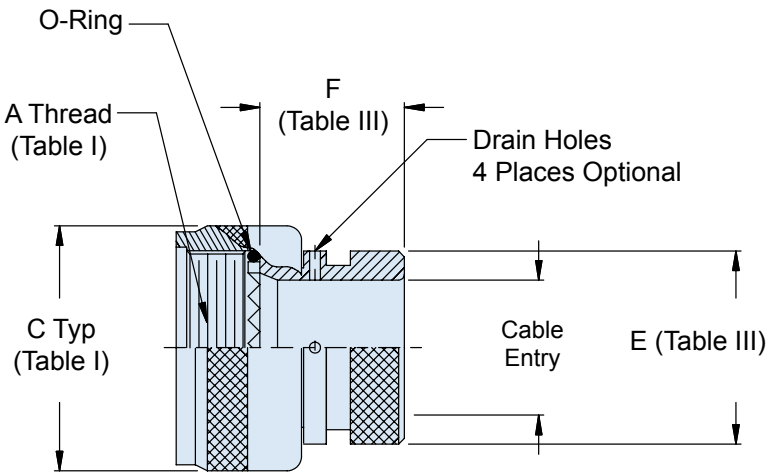

TABLE II: FINISHES

Symbol	Finish
B	Cadmium Plate, Olive Drab
C	Anodize, Black
GB	Black Anodize, Hard Coat
M	Electroless Nickel
N	Cad Plate, Olive Drab over Electroless Nickel
NF	Cadmium Plate, Olive Drab over Electroless Nickel
MT	Ni-PTFE *1000 Hour Grey™* Nickel Fluorocarbon Polymer
Z1	Stainless Steel Passivate
ZL	CRES, Electroless Nickel
ZN	Zinc-Nickel

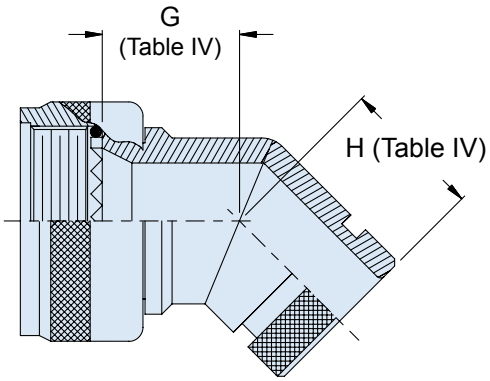

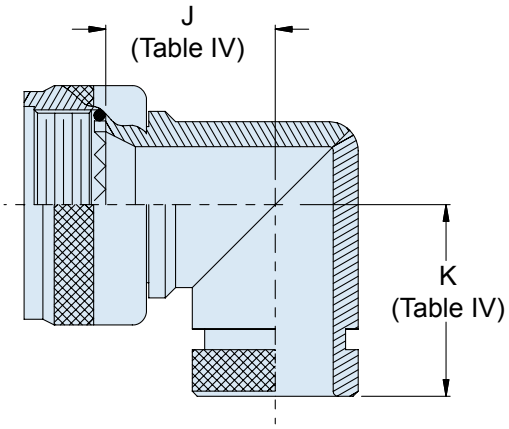

© 2010 Glenair, Inc. CAGE CODE 06324 Printed in U.S.A.

310-001
O-Ring Sealed Shrink Boot Adapter
Rotatable Coupling - Standard Profile

TABLE III: CABLE ENTRY AND SHRINK BOOT					
Connector Designator F	Connector Designator H	E Max	F Max	Cable Entry Min	Shrink Boot*
08	09	.533 (13.5)	.940 (23.9)	.250 (6.4)	770-003S102
10	11	.605 (15.4)	.940 (23.9)	.355 (9.0)	770-001S103
12	13	.774 (19.7)	.940 (23.9)	.491 (12.5)	770-001S103
14	15	.838 (21.3)	.940 (23.9)	.565 (14.4)	770-001S103
16	17	.963 (24.5)	.940 (23.9)	.690 (17.5)	770-001S104
18	19	1.042 (26.5)	.940 (23.9)	.769 (19.5)	770-001S104
20	21	1.217 (30.9)	.940 (23.9)	.894 (22.7)	770-001S106
22	23	1.355 (34.4)	.940 (23.9)	1.019 (25.9)	770-001S107
24	25	1.443 (36.7)	.940 (23.9)	1.134 (28.8)	770-001S107
28	29	1.709 (43.4)	.940 (23.9)	1.369 (34.8)	770-001S108
32	33	1.919 (48.7)	1.005 (25.5)	1.615 (41.0)	770-001S108

TABLE IV: BACKSHELL DIMENSIONS					
Connector Designator F	Connector Designator H	G Max	H Max	J Max	K Max
08	09	.639 (16.2)	810 (20.6)	.750 (19.1)	.920 (23.4)
10	11	.664 (16.9)	.840 (21.3)	.810 (20.6)	.980 (24.9)
12	13	.688 (17.5)	.860 (21.8)	.870 (22.1)	1.040 (26.4)
14	15	.705 (17.9)	.890 (22.6)	.920 (23.4)	1.110 (28.2)
16	17	.732 (18.6)	.910 (23.1)	.980 (24.9)	1.170 (29.7)
18	19	.748 (19.0)	.920 (23.4)	1.020 (25.9)	1.190 (30.2)
20	21	.773 (19.6)	.940 (23.9)	1.080 (27.4)	1.250 (31.8)
22	23	.800 (20.3)	.980 (24.9)	1.140 (29.0)	1.330 (33.8)
24	25	.823 (20.9)	1.010 (25.7)	1.200 (30.5)	1.400 (35.6)
28	29	1.041 (26.4)	1.180 (30.0)	1.480 (37.6)	1.640 (41.7)
32	33	1.092 (27.7)	1.370 (34.8)	1.610 (40.9)	1.880 (47.8)

APPLICATION NOTES

1. See shrink boot reference information (Page G-5).
2. O-Rings not supplied with drain hole option.
3. O-Rings not supplied with Connector Designators A and G.
4. Metric dimensions (mm) indicated in parentheses.

© 2010 Glenair, Inc. CAGE CODE 06324 Printed in U.S.A.

319-064
Composite Self-Locking Rotatable Coupling
Swing-Arm Strain Relief with Nickel/Copper EMI/RFI Shield Sock & Optional Split Ring

CONNECTOR DESIGNATOR
MIL-DTL-38999 Series I, II (F)
(for Series II see note 6)
MIL-DTL-38999 Series III and IV (H)

F-H
SELF-LOCKING
ROTATABLE COUPLING

Product Series		Basic Number		Shell Size	
319	F	064	XO	16	R
	Connector Designator *(F and H)*		Finish		R = Split Ring (687-207) & Band (600-052) supplied *(Omit if not required)*

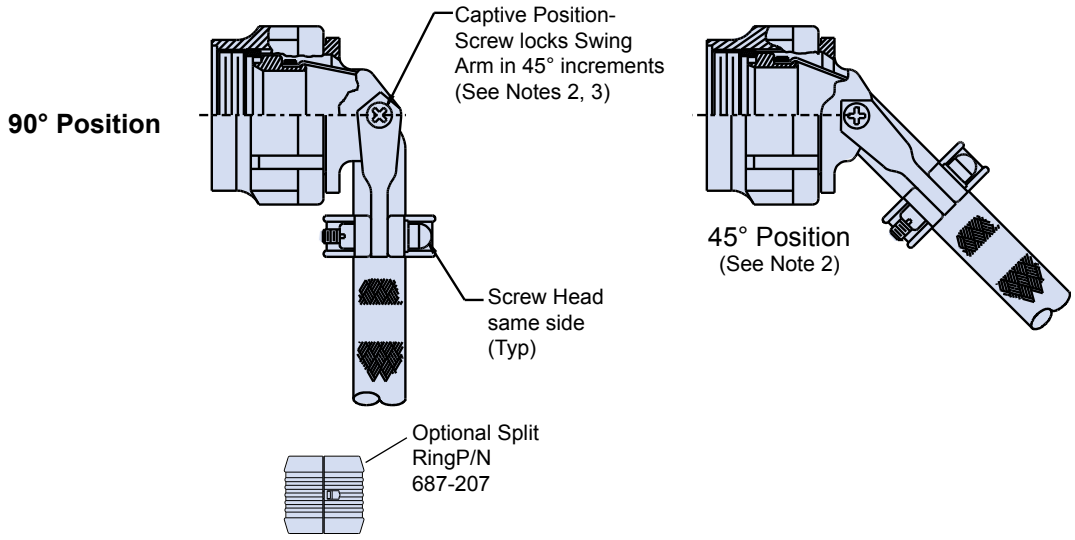

U.S. PATENT NO. 6419519

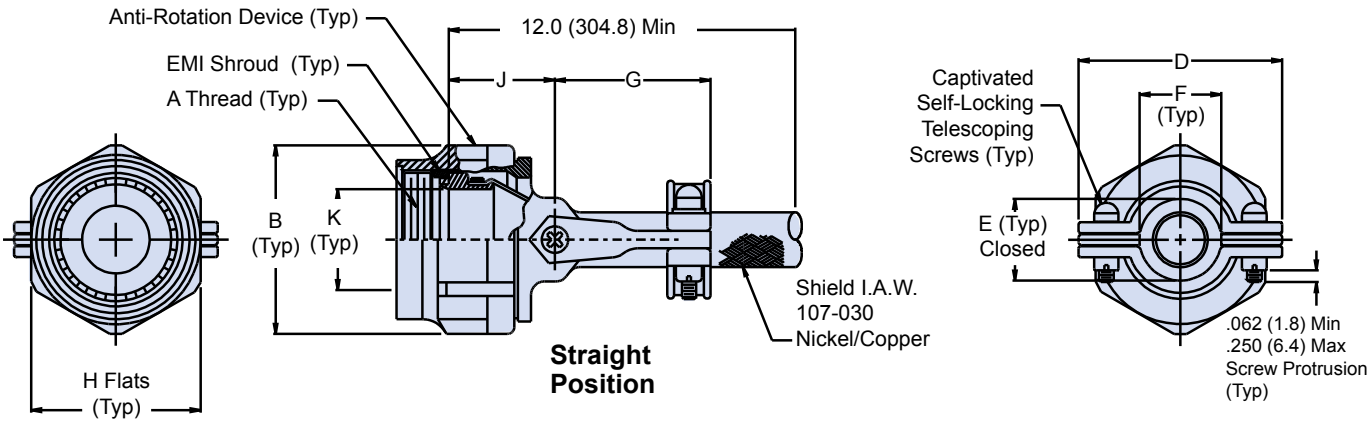

© 2010 Glenair, Inc. CAGE CODE 06324 Printed in U.S.A.

319-064
Composite Self-Locking Rotatable Coupling
Composite Swing-Arm Strain Relief with Nickel/Copper EMI/RFI Shield Sock & Optional Split Ring

Glenair®

TABLE II: FINISHES

Symbol	Finish
XB	Composite Material, No Plating, Color Black, Brass Interface Shroud and Adapter - Nickel Plated
XMT	Composite Material, No Plating, Color Black and Brown, Brass Interface Shroud and Adapter - Ni-PTFE *1000 Hour Grey*™ (Nickel-Fluorocarbon Polymer)
XN	Composite Material, No Plating, Color Black and Brown, Brass Interface Shroud and Adapter - Selectively Cadmium Plated
XO	Composite Material, No Plating, Color Black and Brown, Brass Interface Shroud and Adapter - Nickel Plated

TABLE III: CONNECTOR SHELL SIZE ORDER NUMBER

Shell Size for Connector Designator F	H	B Dia Max	D Max	E ±.06 (1.5)	F Min	G Max	H Flats Max	H Flats Min	J ±.06 (1.5)	K Ref
08	09	.812 (20.6)	.980 (24.9)	.265 (6.7)	.220 (5.9)	1.060 (26.9)	.750 (19.1)	.736 (18.7)	.940 (23.9)	.265 (6.7)
10	11	.938 (23.8)	1.050 (26.7)	.310 (7.9)	.270 (6.9)	1.090 (27.7)	.875 (22.2)	.860 (21.8)	.970 (24.6)	.370 (9.4)
12	13	1.125 (28.6)	1.200 (30.5)	.390 (9.9)	.350 (8.9)	1.180 (30.0)	1.000 (25.4)	.980 (24.9)	1.030 (26.2)	.506 (12.9)
14	15	1.250 (31.8)	1.300 (33.0)	.506 (12.9)	.470 (11.9)	1.240 (31.5)	1.125 (28.6)	1.100 (27.9)	1.090 (27.7)	.580 (14.7)
16	17	1.375 (34.9)	1.440 (36.6)	.591 (15.0)	.550 (14.0)	1.320 (33.5)	1.250 (31.8)	1.224 (31.1)	1.120 (28.4)	.705 (17.9)
18	19	1.500 (38.1)	1.560 (39.6)	.661 (16.8)	.620 (15.7)	1.390 (35.3)	1.375 (34.9)	1.469 (37.3)	1.150 (29.2)	.784 (19.9)
20	21	1.625 (41.3)	1.690 (42.9)	.744 (18.9)	.700 (17.8)	1.550 (39.4)	1.500 (38.1)	1.500 (38.1)	1.180 (30.0)	.909 (23.1)
22	23	1.750 (44.5)	1.770 (45.0)	.826 (21.0)	.780 (19.8)	1.550 (39.4)	1.625 (41.3)	1.581 (40.2)	1.250 (31.8)	1.034 (26.3)
24	25	1.875 (47.6)	1.890 (48.0)	.896 (22.8)	.850 (21.6)	1.610 (40.9)	1.750 (44.5)	1.960 (49.8)	1.280 (32.5)	1.149 (29.2)

Consult factory for additional entry sizes available.

APPLICATION NOTES

1. Glenair series 600 Backshell assembly Tools are recommended for assembly and installation.
2. Swing Arm locks in 45° increments–Sizes 08 thru 24, additional positioning increments are manufacturer's option.
3. Captive Screw can remain engaged to the body when positioning the Arm. When tightened, the Screw shall not protrude into the inside surfaces.
4. Fits Connector Designators: MIL-DTL-38999 Series I, II (F), MIL-DTL-38999 Series III and IV (H), MIL-DTL-5015 (A), and MIL-DTL-26482 (A).
5. Metric dimensions (mm) are indicated in parentheses.
6. For Mil-DTL-38999 Series II, add Mod Code -475. Backshell supplied less shroud.

© 2010 Glenair, Inc. CAGE CODE 06324 Printed in U.S.A.

319-065
Composite Self-Locking Rotatable Coupling
Swing-Arm Strain Relief with Composite EMI/RFI Shield Sock & Optional Split Ring

CONNECTOR DESIGNATOR
MIL-DTL-38999 Series I, II (F)
MIL-DTL-38999 Series III and IV (H)

F-H
SELF-LOCKING
ROTATABLE COUPLING

Product Series		Basic Number		Shell Size	
319	F	065	XO	16	R
	Connector Designator *(F and H)*		Finish		R = Split Ring (687-207) & Band (600-052) supplied *(Omit if not required)*

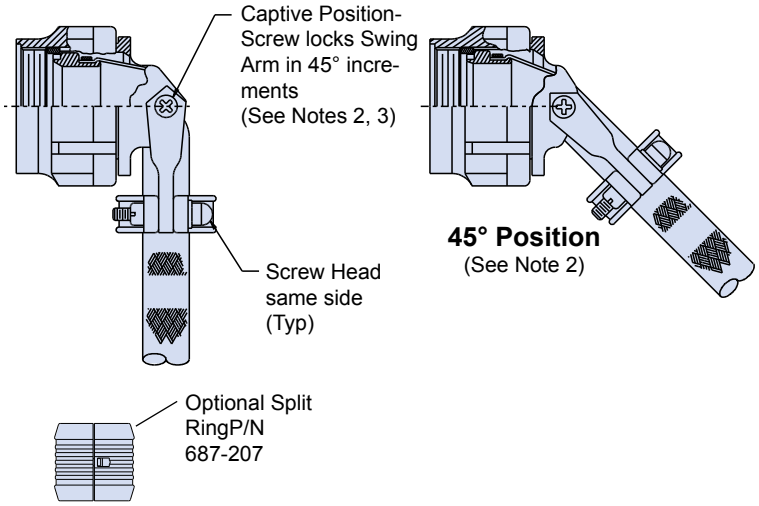

U.S. PATENT NO. 6419519

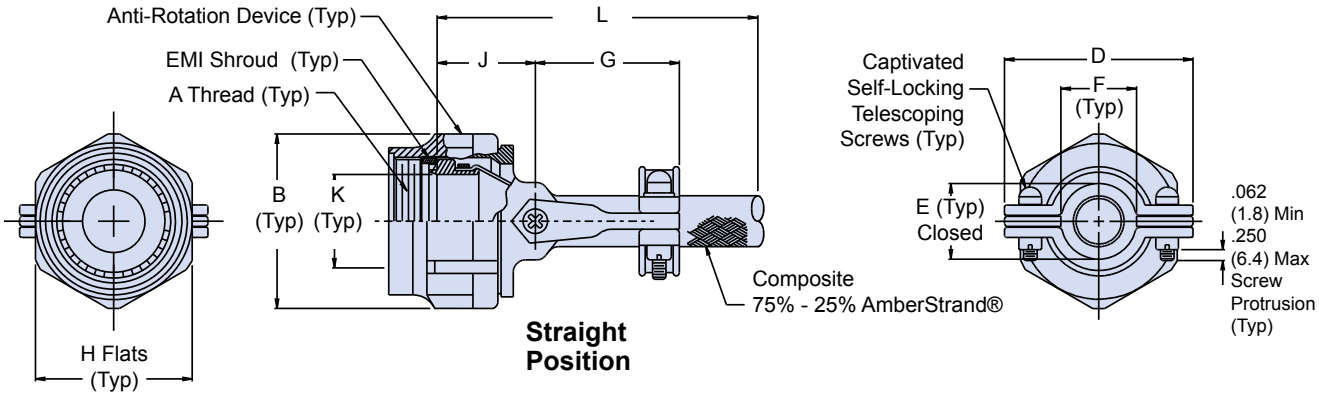

© 2010 Glenair, Inc. CAGE CODE 06324 Printed in U.S.A.

319-065
Composite Self-Locking Rotatable Coupling
Swing-Arm Strain Relief with
Composite EMI/RFI Shield Sock & Optional Split Ring

Glenair®

TABLE II: FINISHES

Symbol	Finish
XB	Composite Material, No Plating, Color Black, Brass Interface Shroud and Adapter - Nickel Plated
XMT	Composite Material, No Plating, Color Black and Brown, Brass Interface Shroud and Adapter - Ni-PTFE *1000 Hour Grey*™ (Nickel-Fluorocarbon Polymer)
XN	Composite Material, No Plating, Color Black and Brown, Brass Interface Shroud and Adapter - Selectively Cadmium Plated
XO	Composite Material, No Plating, Color Black and Brown, Brass Interface Shroud and Adapter - Nickel Plated

TABLE III: CONNECTOR SHELL SIZE ORDER NUMBER

Shell Size for Connector Designator F	Shell Size for Connector Designator H	B Dia Max	D Max	E ±.06 (1.5)	F Min	G Max	H Flats Max	H Flats Min	J ±.06 (1.5)	K Ref	L Min
08	09	.812 (20.6)	.980 (24.9)	.265 (6.7)	.220 (5.9)	1.060 (26.9)	.750 (19.1)	.736 (18.7)	.940 (23.9)	.265 (6.7)	7.000 (177.8)
10	11	.938 (23.8)	1.050 (26.7)	.310 (7.9)	.270 (6.9)	1.090 (27.7)	.875 (22.2)	.860 (21.8)	.970 (24.6)	.370 (9.4)	7.000 (177.8)
12	13	1.125 (28.6)	1.200 (30.5)	.390 (9.9)	.350 (8.9)	1.180 (30.0)	1.000 (25.4)	.980 (24.9)	1.030 (26.2)	.506 (12.9)	7.000 (177.8)
14	15	1.250 (31.8)	1.300 (33.0)	.506 (12.9)	.470 (11.9)	1.240 (31.5)	1.125 (28.6)	1.100 (27.9)	1.090 (27.7)	.580 (14.7)	9.000 (228.6)
16	17	1.375 (34.9)	1.440 (36.6)	.591 (15.0)	.550 (14.0)	1.320 (33.5)	1.250 (31.8)	1.224 (31.1)	1.120 (28.4)	.705 (17.9)	11.000 (279.4)
18	19	1.500 (38.1)	1.560 (39.6)	.661 (16.8)	.620 (15.7)	1.390 (35.3)	1.375 (34.9)	1.469 (37.3)	1.150 (29.2)	.784 (19.9)	11.000 (279.4)
20	21	1.625 (41.3)	1.690 (42.9)	.744 (18.9)	.700 (17.8)	1.550 (39.4)	1.500 (38.1)	1.500 (38.1)	1.180 (30.0)	.909 (23.1)	11.000 (279.4)
22	23	1.750 (44.5)	1.770 (45.0)	.826 (21.0)	.780 (19.8)	1.550 (39.4)	1.625 (41.3)	1.581 (40.2)	1.250 (31.8)	1.034 (26.3)	11.000 (279.4)
24	25	1.875 (47.6)	1.890 (48.0)	.896 (22.8)	.850 (21.6)	1.610 (40.9)	1.750 (44.5)	1.960 (49.8)	1.280 (32.5)	1.149 (29.2)	11.000 (279.4)

Consult factory for additional entry sizes available.

APPLICATION NOTES

1. Glenair series 600 Backshell assembly tools are recommended for assembly and installation.
2. Swing Arm locks in 45° increments–Sizes 08 thru 24, additional positioning increments are manufacturer's option.
3. Captive Screw remains engaged to the body when positioning the Arm. When tightened, the Screw shall not protrude into the inside surfaces.
4. Fits Connector Designators: MIL-DTL-38999 Series I, II (F), MIL-DTL-38999 Series III and IV (H), MIL-DTL-5015 (A), and MIL-DTL-26482 (A)
5. Metric Dimensions (mm) are indicated in parentheses.

© 2010 Glenair, Inc.

GLENAIR, INC. • 1211 AIR WAY • GLENDALE, CA 91201-2497 • 818-247-6000 • FAX 818-500-9912
www.glenair.com E-Mail: sales@glenair.com

Composite Thermoplastic User Adjustable Swing-Arm Assembly
Technical Information

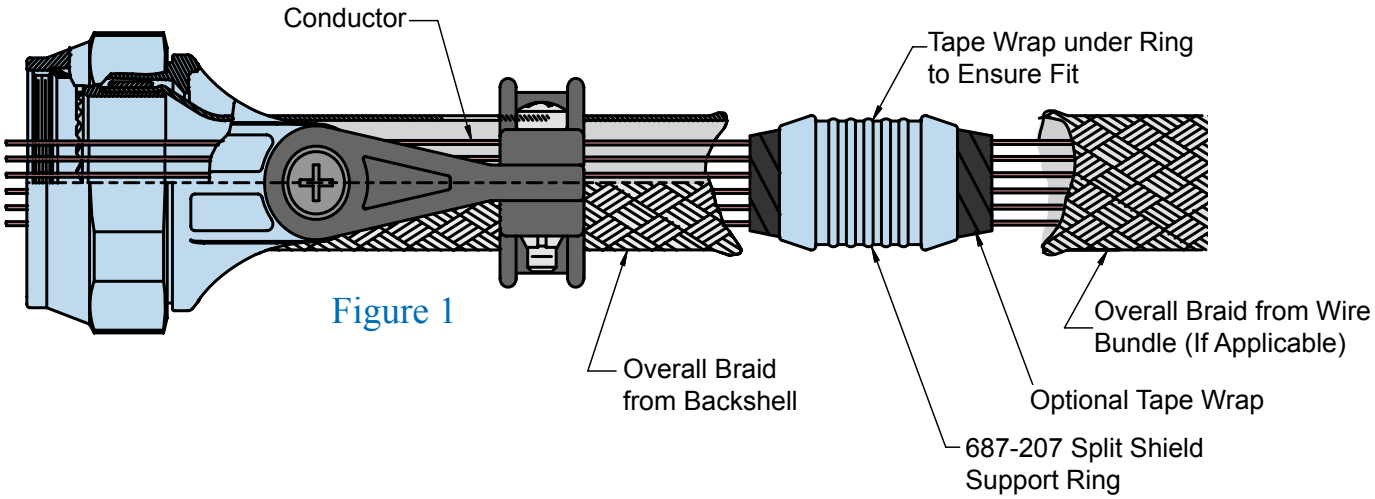

Figure 1

Glenair Swing-Arm Offers Extremely Fast and Trouble-Free Termination of EMI Shielding:

Choose Straight, 45° or 90° angle, and tighten screws to lock arms in place. Leave the saddle clamp hardware loose.

Next, insert the wire bundle into the backshell to determine if the braid transition angle from the backshell to wire bundle is less than 45º. If it is less than 45°, build up the wire bundle with tape and re-insert wire bundle into backshell to support the transition of overall braid from the backshell to the wire bundle.

Loosely assembly the adapter to the connector and push back the backshell braid. Insert the wire bundle into the adapter and bottom it against the connector. Holding the cable, mark or tag the location where the shield support ring (Glenair Part Number 687-207) will be located. This distance may vary depending on your technique and the flexibility of the wire bundle immediately to the rear of the saddles (Figure 1).

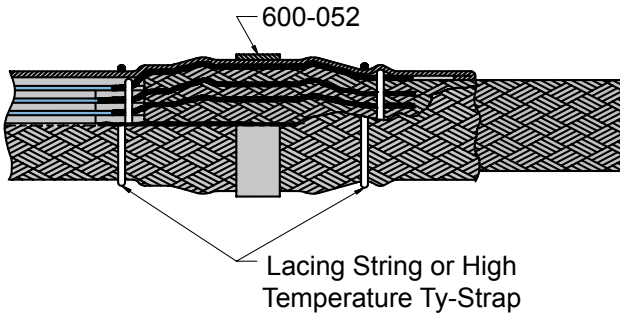

Figure 2

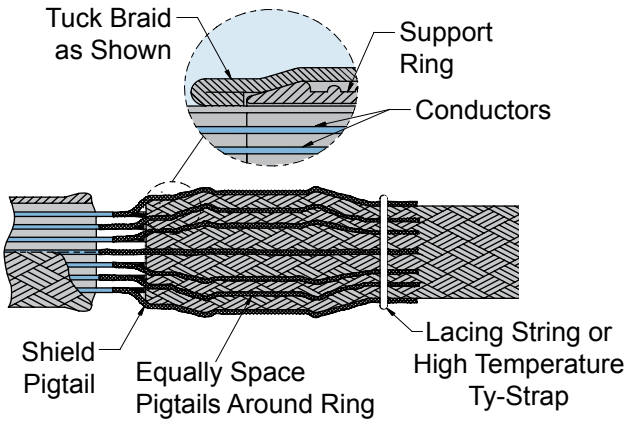

Figure 3

© 2010 Glenair, Inc.

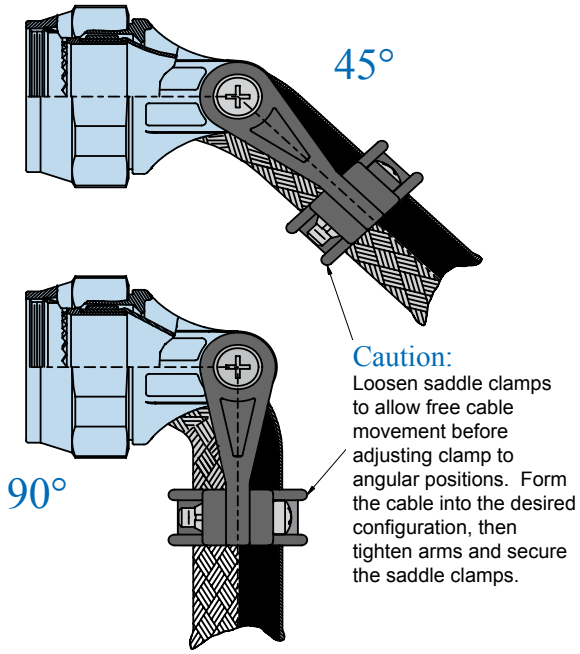

At the marked location, near the shield support ring, wrap tape around wire bundle for snug fit of shield support ring (Figure 1). Tape wrap is optional.

You can then slide the overall braid from the wire bundle side over the shield support ring, trimming braid ends and tucking extra braid underneath itself for a clean appearance.

For pin connectors, slide the backshell forward, and hand tighten backshell to connector. Then, evenly space shield pigtails (Figure 3) or solder sleeve pigtails (Figure 4) around the shield support ring. Cut the pigtails so that the end of the pigtails slightly beyond end of shield support ring.

Bring the shield sock from backshell and completely cover the pigtails and support ring. Trim and fold the braid as shown in Figure 2. Lace tie the shield adjacent to support ring ends.

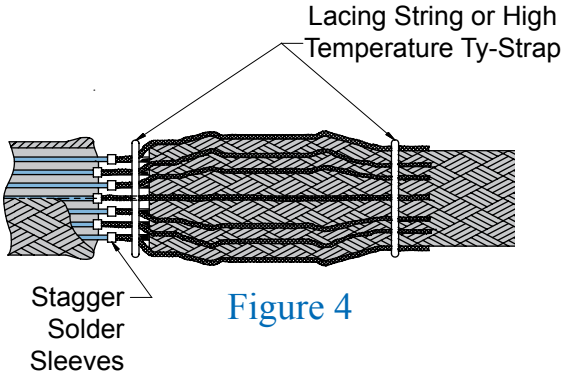

Figure 4

Install Glenair's *Band-it*® band (600-052) between the lace ties onto the center of the support ring as shown in Figure 2. The hand banding tool (600-058) or pneumatic banding tool (600-067) is used for this banding process.

Next, you can wrap the shield support ring assembly with high temperature tape. Place lacing cord, high temperature tape, or high temperature plastic Ty-Straps on the braid transition to the rear of the backshell to secure the overbraid on wire bundle. If you wish, you can cover the overbraid with 102-080 braid sock.

Tighten the adapter to the connector using Glenair 600-091 composite hex coupling torque wrench and related tooling accessories to established torque values. Secure the strain relief saddle onto the wire bundle using TG69 soft jaw pliers. Torque the saddle screws to established values. You can use Fluoropolymer tape wrap or M85049/127 bushing strip as needed to cushion the braid sock under the saddle clamps.

With these few steps, your Swing-Arm strain relief installation is complete!

© 2010 Glenair, Inc.

GLENAIR, INC. • 1211 AIR WAY • GLENDALE, CA 91201-2497 • 818-247-6000 • FAX 818-500-9912
www.glenair.com E-Mail: sales@glenair.com

380-107
EMI/RFI Non-Environmental Backshell
with Strain Relief
Type D - Self-Locking - Rotatable Coupling - Split Shell

Connector Designators:

MIL-DTL-38999 Series I, II (F)
MIL-DTL-38999 Series III and IV (H)

F-H

SELF-LOCKING
ROTATABLE COUPLING
TYPE D INDIVIDUAL OR OVERALL SHIELD TERMINATION

Product Series	Connector Designator	Angle and Profile	Basic Number	Finish	Shell Size	Cable Entry	Strain Relief Style (F & G)
380	F	D	107	M	16	05	F

Angle and Profile:
- *C - Ultra-Low Split 90°*
- *D - Split 90°*
- *F - Split 45°*

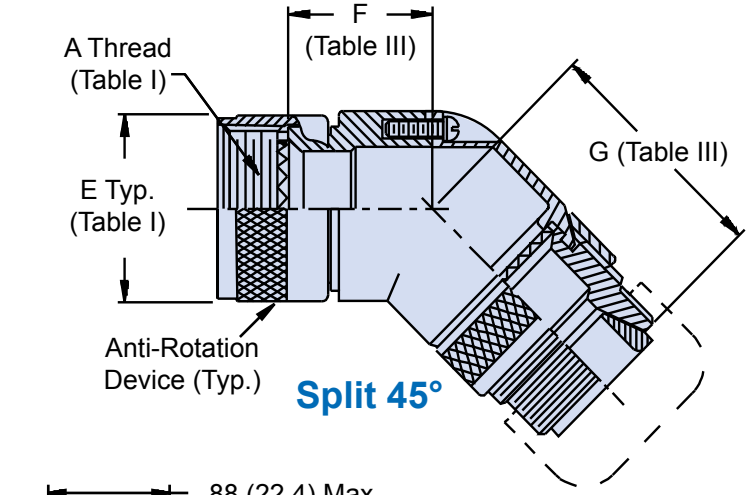

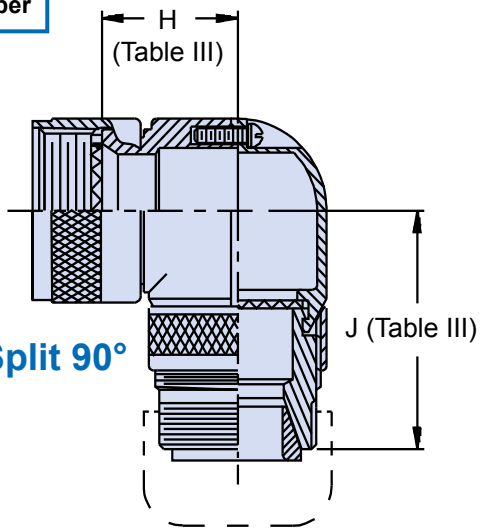

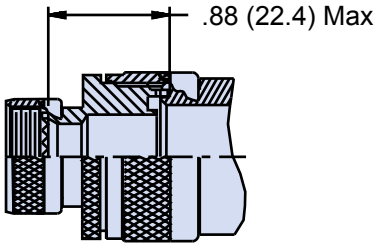

STYLE 2
(See Note 1)

STYLE F
Light Duty
(Table IV)

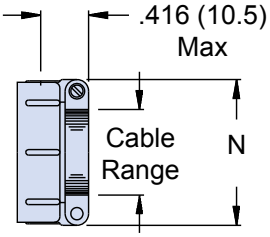

STYLE G
Light Duty
(Table V)

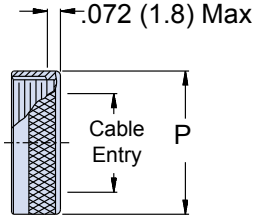

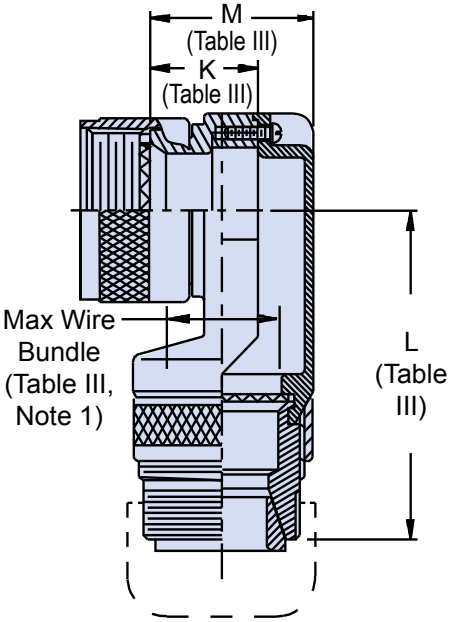

Ultra Low-Profile Split 90°

© 2010 Glenair, Inc.

GLENAIR, INC. • 1211 AIR WAY • GLENDALE, CA 91201-2497 • 818-247-6000 • FAX 818-500-9912
www.glenair.com
E-Mail: sales@glenair.com

380-107
EMI/RFI Non-Environmental Backshell
with Strain Relief
Type D - Self-Locking - Rotatable Coupling - Split Shell

Glenair®

TABLE III: ELBOW DIMENSIONS AND MAXIMUM WIRE BUNDLE

Shell Size	F Max	G Max	H Max	J Max	K Max	L Max	M Max	Function C Max Wire Bundle
08/09	.596 (15.1)	1.730 (43.9)	.836 (21.2)	1.670 (42.4)	.496 (12.6)	1.920 (48.8)	.837 (21.3)	250 (6.4)
10/11	.656 (16.7)	1.785 (45.3)	.906 (23.0)	1.725 (43.8)	.426 (10.8)	2.080 (52.8)	.887 (22.5)	.375 (9.5)
12/13	.716 (18.2)	1.855 (47.1)	.966 (24.5)	1.795 (45.6)	.426 (10.8)	2.080 (52.8)	.887 (22.5)	.375 (9.5)
14/15	.776 (19.7)	1.887 (47.9)	1.026 (26.1)	1.827 (46.4)	.436 (11.1)	2.150 (54.6)	.987 (25.1)	.500 (12.7)
16/17	.836 (21.2)	1.987 (50.5)	1.086 (27.6)	1.927 (48.9)	.576 (14.6)	2.200 (55.9)	1.137 (28.9)	.625 (15.9)
18/19	.906 (23.0)	2.045 (51.9)	1.156 (29.4)	1.985 (50.4)	.796 (20.2)	2.230 (56.6)	1.337 (34.0)	.625 (15.9)
20/21	.976 (24.8)	2.106 (53.5)	1.216 (30.9)	2.046 (52.0)	.796 (20.2)	2.230 (56.6)	1.337 (34.0)	.625 (15.9)
22/23	1.036 (26.3)	2.167 (55.0)	1.276 (32.4)	2.107 (53.5)	.696 (17.7)	2.380 (60.5)	1.337 (34.0)	.750 (19.1)
24/25	1.096 (27.8)	2.225 (56.5)	1.336 (33.9)	2.165 (55.0)	.696 (17.7)	2.380 (60.5)	1.337 (34.0)	.750 (19.1)

TABLE II: FINISHES

Symbol	Finish
B	Cadmium Plate, Olive Drab
C	Anodize, Black
GB	Black Anodize, Hard Coat
M	Electroless Nickel
N	Cad Plate, Olive Drab over Electroless Nickel
NF	Cadmium Plate, Olive Drab over Electroless Nickel
MT	Ni-PTFE *1000 Hour Grey™* Nickel Fluorocarbon Polymer
ZN	Zinc-Nickel

TABLE IV: CABLE RANGE

Dash No.	N Max	Cable Range Min	Cable Range Max
02	.968 (24.6)	.125 (3.2)	.250 (6.4)
03	1.046 (26.6)	.250 (6.4)	.375 (9.5)
04	1.156 (29.4)	.312 (7.9)	.500 (12.7)
05	1.218 (30.9)	.437 (11.1)	.625 (15.9)
06	1.343 (34.1)	.562 (14.3)	.750 (19.1)
07	1.468 (37.3)	.687 (17.4)	.875 (22.2)
08	1.593 (40.5)	.812 (20.6)	1.000 (25.4)
10	1.843 (46.8)	1.062 (27.0)	1.250 (31.8)

TABLE V: CABLE RANGE

Dash No.	N Max	Cable Entry Max
02	.656 (16.7)	.125 (3.2)
03	.781 (19.8)	.250 (6.4)
04	.906 (23.0)	.375 (9.5)
05	1.031 (26.2)	.500 (12.7)
06	1.156 (29.4)	.625 (15.9)
07	1.281 (32.5)	.750 (19.1)
08	1.406 (35.7)	.875 (22.2)
09	1.531 (38.9)	1.000 (25.4)
10	1.656 (42.1)	1.125 (28.6)

APPLICATION NOTES

1. When maximum cable entry is exceeded (not available in Function C), Style 2 will be supplied. Dimensions F, G, H and J will not apply. Please consult factory.
2. Cable range is defined as the accommodations range for the wire bundle or cable.
3. Dimensions shown are not intended for inspection criteria.
4. Angular function "C", low-profile split elbow, not available with **"S"** connector designator.
5. Metric dimensions (mm) are indicated in parentheses.

© 2010 Glenair, Inc. CAGE CODE 06324 Printed in U.S.A.

380-115
EMI/RFI Non-Environmental Backshell
with Strain Relief
Type B - Rotatable Coupling - Low Profile

CONNECTOR DESIGNATORS

MIL-DTL-38999 Series I, II (F)
MIL-DTL-38999 Series III and IV (H)

F-H
ROTATABLE COUPLING
TYPE B INDIVIDUAL AND/OR OVERALL SHIELD TERMINATION

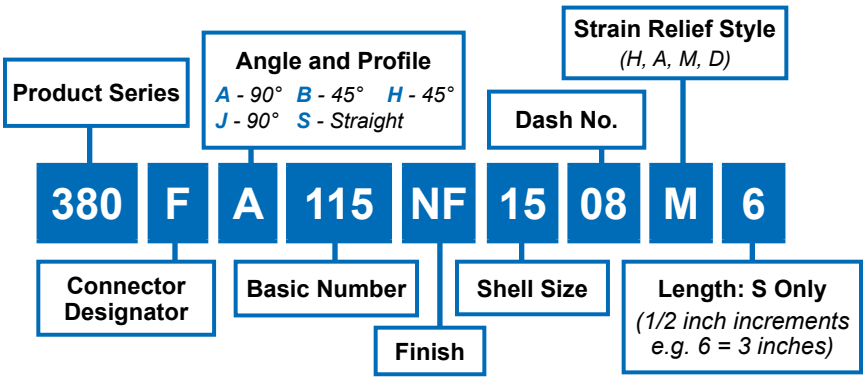

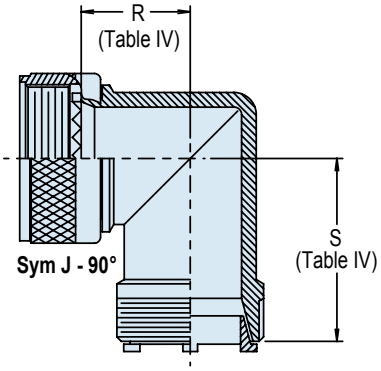

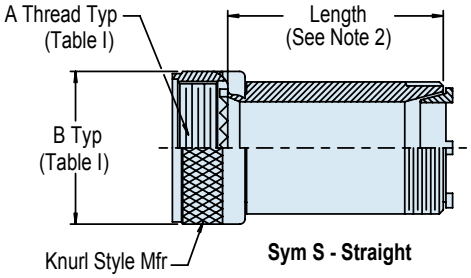

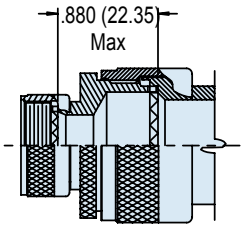

Style II
45° & 90°
(See Note 3)

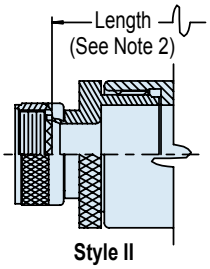

Style II
Straight
(See Note 3)

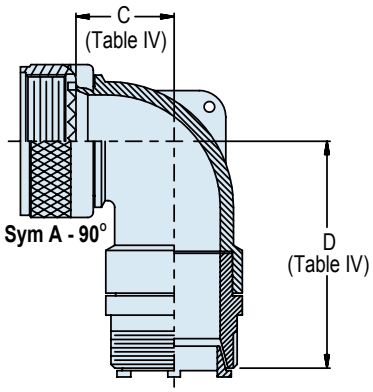

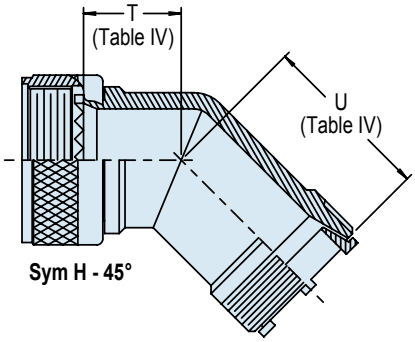

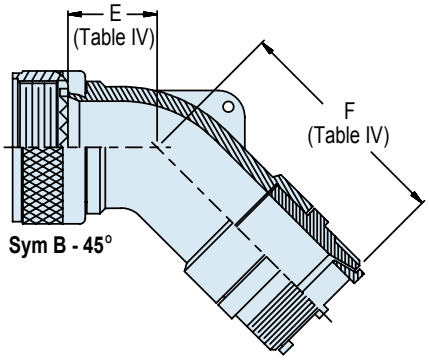

STYLE H
Heavy Duty
(Table X)

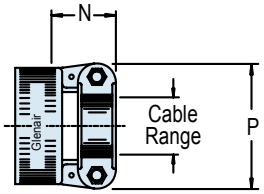

STYLE A
Medium Duty
(Table XI)

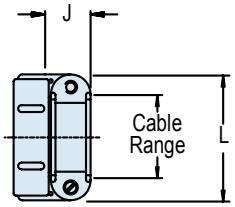

STYLE M
Medium Duty
(Table XI)

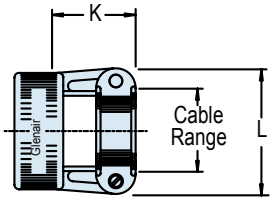

STYLE D
Medium Duty
(Table XI)

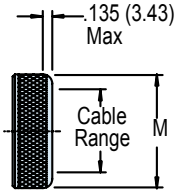

© 2010 Glenair, Inc.
CAGE CODE 06324
Printed in U.S.A.

380-115
EMI/RFI Non-Environmental Backshell
with Strain Relief
Type B - Rotatable Coupling - Low Profile

Glenair®

TABLE III: ELBOW DIMENSIONS

Shell Size A	Shell Size F,L,S	Shell Size H	C Max	D Max	E Max	F Max	R Max	S Max	T Max	U Max
08	08	09	.500 (12.7)	1.684 (42.8)	457 (11.6)	1.674 (42.5)	.910 (23.11)	1.910 (48.77)	.780 (19.81)	1.780 (45.21)
10	10	11	.595 (15.1)	1.804 (45.8)	.520 (13.2)	1.734 (44.0)	.970 (24.64)	1.970 (50.04)	.810 (20.57)	1.810 (45.97)
12	12	13	.610 (15.5)	1.824 (46.3)	.582 (14.8)	1.794 (45.6)	1.030 (26.16)	2.030 (50.56)	.830 (21.08)	1.830 (46.48)
14	14	15	.700 (17.8)	1.894 (48.1)	.645 (16.4)	1.884 (47.9)	1.090 (27.68)	2.090 (53.09)	.850 (21.59)	1.850 (46.99)
16	16	17	.885 (22.5)	1.984 (50.4)	.738 (18.7)	1.994 (50.6)	1.150 (29.21	2.150 (54.61)	.880 (22.35)	1.880 (47.75)
18	18	19	.975 (24.8)	2.154 (54.7)	.926 (23.5)	2.184 (55.5)	1.200 (30.48)	2.200 (55.88)	.900 (22.86)	1.900 (48.26)
20	20	21	.975 (24.8)	2.154 (54.7)	.926 (23.5)	2.184 (55.5)	1.270 (32.26)	2.270 (57.66)	.930 (23.62)	1.930 (49.02)
22	22	23	1.125 (28.6)	2.264 (57.5)	1.020 (25.9)	2.334 (59.3)	1.330 (33.78)	2.330 (59.18)	.950 (24.13)	1.950 (49.53)
24	24	25	1.125 (28.6)	2.264 (57.5)	1.020 (25.9)	2.334 (59.3)	1.390 (35.31)	2.390 (60.71)	.980 (24.13)	1.980 (50.29)
28			1.225 (31.1)	2.434 (61.8)	1.145 (29.1)	2.384 (60.6)	1.460 (37.08)	2.460 (62.48)	1.150 (29.21)	2.150 (54.61)
32			1.575 (40.0)	2.684 (68.2)	1.207 (30.7)	2.484 (63.1)	1.590 (40.38)	2.590 (65.79)	1.210 (30.73)	2.210 (56.13)
36			1.775 (45.1)	2.684 (68.2)	1.238 (31.4)	2.574 (65.4)	1.690 (42.93)	2.690 (68.33)	1.240 (31.50)	2.240 (56.90)
40			N/A	N/A	N/A	N/A	1.900 (48.26)	2.200 (55.88)	1.250 (31.75)	1.590 (40.38)
44			N/A	N/A	N/A	N/A	2.030 (51.56)	2.360 (59.94)	1.300 (33.02)	1.640 (41.65)
48			N/A	N/A	N/A	N/A	2.180 (53.37)	2.530 (64.26)	1.370 (34.79)	1.720 (43.68)
61			N/A	N/A	N/A	N/A	1.290 (32.76)	1.490 (37.85)	.880 (22.35)	1.100 (27.94)

TABLE II: FINISHES

Sym	Finish
B	Cadmium Plate, Olive Drab
C*	Anodize, Black
G*	Hard Coat, Anodic
J	Gold Iridite over Cadmium Plate over Nickel
LF	Cadmium Plate, Bright over Electroless Nickel
M	Electroless Nickel
N	Cadmium Plate, Olive Drab over Nickel
NC	Zinc Cobalt, Dark Olive Drab
NF	Cad/O.D. over Electroless Nickel (1000 Hr. Salt Spray)
T	Cadmium Plate, Bright Dip over Nickel
U**	Cadmium Plate, Black
UC	Zinc Cobalt, Black
Z1**	Passivate
ZN	Zinc Nickel, Olive Drab

TABLE IV: CABLE CLAMP CABLE RANGE

Dash No.	N Max	P Max	Cable Range Min	Cable Range Max
04	.780 (19.8)	.957 (24.3)	.125 (3.2)	.312 (7.9)
06	.780 (19.8)	1.145 (29.1)	.250 (6.4)	.437 (11.1)
08	.780 (19.8)	1.332 (33.8)	.312 (7.9)	.562 (14.3)
10	.780 (19.8)	1.332 (33.8)	.350 (8.9)	.625 (15.9)
12	.811 (20.6)	1.551 (39.4)	.500 (12.7)	.750 (19.1)
16	.905 (23.0)	1.770 (45.0)	.625 (15.9)	.937 (23.8)
20	1.092 (27.7)	2.113 (53.7)	.875 (22.2)	1.250 (31.8)
24	1.124 (28.5)	2.363 (60.0)	1.000 (25.4)	1.375 (34.9)
28	1.399 (35.5)	2.770 (70.4)	1.250 (31.8)	1.625 (41.3)
32	1.399 (35.5)	3.020 (76.7)	1.437 (36.5)	1.875 (47.6)

TABLE IV (Continued): CABLE CLAMP CABLE RANGE

Dash No.	W Max	X Max	Y Max	Z Max	Cable Range Min**	Cable Range Max
03*	.437 (11.1)	.760 (19.3)	.843 (21.4)	.630 (16.0)	.156 (4.0)	.250 (6.4)
04*	.437 (11.1)	.760 (19.3)	.906 (23.0)	.755 (19.2)	.188 (4.8)	.312 (7.9)
06	.500 (12.7)	.760 (19.3)	1.093 (27.8)	.942 (23.9)	.281 (7.1)	.438 (11.1)
08	.563 (14.3)	.760 (19.3)	1.187 (30.1)	1.067 (27.1)	.344 (8.7)	.562 (14.3)
10	.563 (14.3)	.760 (19.3)	1.281 (32.5)	1.192 (30.3)	.375 (9.5)	.625 (15.9)
12	.563 (14.3)	.760 (19.3)	1.500 (38.1)	1.380 (35.1)	.438 (11.1)	.750 (19.1)
16	.656 (16.7)	1.073 (27.3)	1.719 (43.7)	1.535 (39.0)	.562 (14.3)	.938 (23.8)
20	.656 (16.7)	1.323 (33.6)	2.062 (52.4)	1.848 (46.9)	.750 (19.1)	1.250 (31.8)
24	.656 (16.7)	1.323 (33.6)	2.312 (58.7)	2.255 (57.3)	.781 (19.8)	1.375 (34.9)
28	1.188 (30.2)	1.572 (39.9)	2.719 (69.1)	2.505 (63.6)	.969 (24.6)	1.625 (41.3)
32*	1.187 (30.1)	1.572 (39.9)	2.969 (75.4)	2.755 (70.0)	1.125 (28.6)	1.875 (47.6)
40*	1.125 (28.6)	1.572 (39.9)	3.531 (89.7)	3.255 (82.7)	1.469 (37.3)	2.375 (60.3)

* Not available in Style M clamp.

** Not Applicable Style D

APPLICATION NOTES

1. Assembly identified with manufacturer's name and part number, space permitting.
2. Standard minimum length for Style I is 1.500 inches, Style II standard length is 2.000 inches.For shorter lengths consult factory. Appklies to Symbol S only.
3. When cable range exceeds Max Entry shown in Table IV, Style II will be supplied. Note: C, D, E, F, R, S, T and U dimensions do not apply to Style II.
4. Metric dimensions are in parentheses.
5. For effective grounding, connector with conductive finish should be used.
6. Glenair Series 600 Backshell Assembly Tools are recommended for assembly and installation.
7. Material/Finish:
   Elbow, adapter, coupling nut, ferrules and clamp - Aluminim alloy or SST/Table II.
   Hardware - CRES/Passivate
8. Angular functions A and B are currently not available in shell sizes 40, 44 and 61. Consult factory for suitable alternatives.

© 2010 Glenair, Inc.

CAGE CODE 06324

Printed in U.S.A.

GLENAIR, INC. • 1211 AIR WAY • GLENDALE, CA 91201-2497 • 818-247-6000 • FAX 818-500-9912
www.glenair.com
E-Mail: sales@glenair.com

440-069
EMI/RFI Banding and Shrink Boot Adapter
Self-Locking Rotatable Coupling - Standard Profile

CONNECTOR DESIGNATORS

F-H

SELF-LOCKING ROTATABLE COUPLING

Product Series	Connector Designator	Contact Style	Basic Number	Finish	Shell Size	Cable Entry	Length: S only	Polysulfide	Shrink Boot
440	F	S	069	M	20	12 -	8	B	P T

Length: S only *(1/2 inch increments, e.g. 8 = 4.00 inches)*

Polysulfide *(Omit for None)*

Contact Style
- *H - 45°*
- *J - 90°*
- *S - Straight*

B - *Band*
K - *Precoiled Band*
(Omit for None)

Shrink Boot Supplied with 'T' Option *(Omit for None)* *See Table IV*

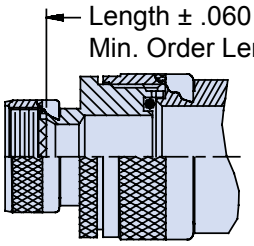

STYLE 2
(STRAIGHT See Note 1)

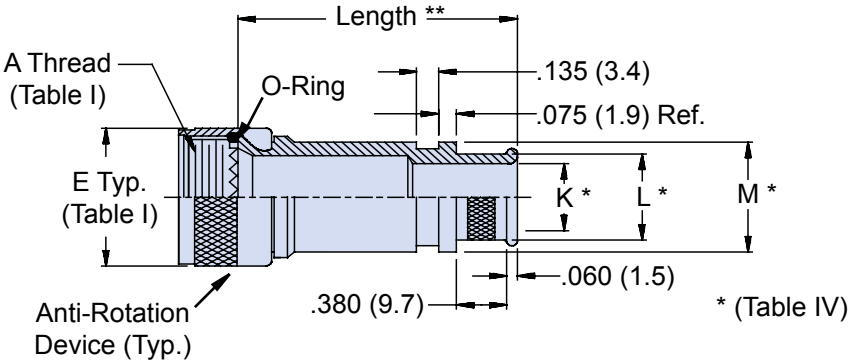

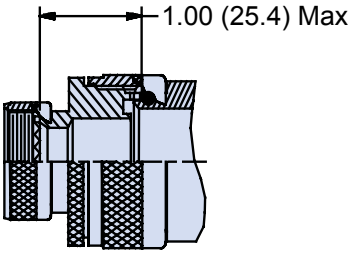

STYLE 2
(45° & 90° See Note 1)

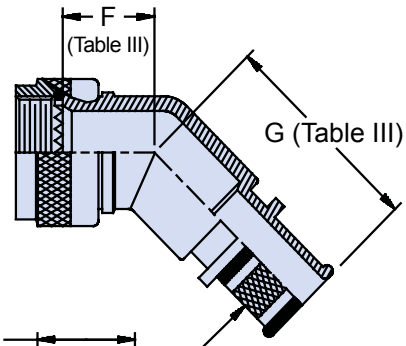

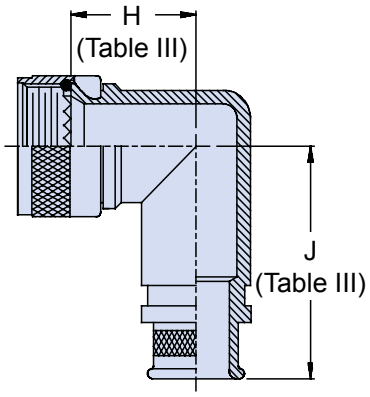

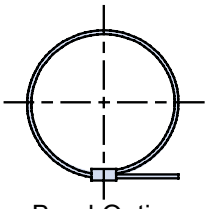

Band Option
(K Option Shown - See Note 6)

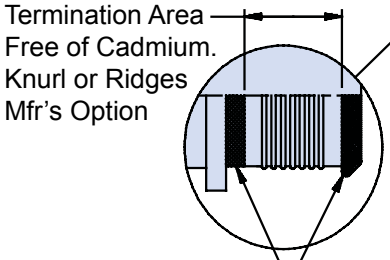

** Length ± .060 (1.52)
Min. Order Length 2.0 inch
(See Note 4)

© 2010 Glenair, Inc.
CAGE CODE 06324
Printed in U.S.A.

440-069
EMI/RFI Banding and Shrink Boot Adapter
Self-Locking Rotatable Coupling - Standard Profile

Glenair®

TABLE III: ELBOW DIMENSIONS

Shell Size Conn. Desig. A-F-L	H	F Max	G Max	H Max	J Max
08	09	.806 (20.5)	1.038 (26.4)	.906 (23.0)	1.146 (29.1)
10	11	.832 (21.1)	1.064 (27.0)	.966 (24.5)	1.210 (30.7)
12	13	.856 (21.7)	1.088 (27.6)	1.026 (26.1)	1.268 (32.2)
14	15	.882 (22.4)	1.114 (28.3)	1.076 (27.3)	1.330 (33.8)
16	17	.908 (23.1)	1.150 (29.2)	1.136 (28.9)	1.392 (35.4)
18	19	.927 (23.5)	1.190 (30.2)	1.176 (29.9)	1.438 (36.5)
20	21	.953 (24.2)	1.250 (31.8)	1.236 (31.4)	1.500 (38.1)
22	23	.979 (24.9)	1.320 (33.5)	1.296 (32.9)	1.562 (39.7)
24	25	1.004 (25.5)	1.380 (35.1)	1.356 (34.4)	1.625 (41.3)
28		1.197 (30.4)	1.500 (38.1)	1.422 (36.1)	1.654 (42.0)
32		1.280 (32.5)	1.620 (41.1)	1.545 (39.2)	1.777 (45.1)
36		1.294 (32.9)	1.750 (44.5)	1.652 (42.0)	1.844 (46.8)
40		1.320 (33.5)	1.870 (47.5)	1.960 (49.8)	2.070 (52.6)

1. When maximum cable entry is exceeded, Style 2 will be supplied. Dimensions F, G, H and J will not apply. Please consult factory.
2. Metric dimensions (mm) are indicated in parentheses.
3. Interface O-Ring not supplied with Connector Designator A.
4. Consult factory for shorter lengths on straight backshells.
5. See G-5 for Shrink Boot Reference Information.
6. Backshells supplied with 600-052-* band, see Glenair Series 600 Tool Catalog for installation.

TABLE IV: CABLE ENTRY

Dash No.	K	L	M	Shrink Boot *
01	.125 (3.2)	.250 (6.4)	.312 (7.9)	770-003S111
31	.188 (4.8)	.312 (7.9)	.374 (9.5)	770-003S111
02	.250 (6.4)	.375 (9.5)	.437 (11.1)	770-003S112
32	.312 (7.9)	.438 (11.1)	.500 (12.7)	770-003S112
03	.375 (9.5)	.500 (12.7)	.562 (14.3)	770-003S112
33	.438 (11.1)	.562 (14.3)	.624 (15.8)	770-001S104
04	.500 (12.7)	.625 (15.9)	.687 (17.4)	770-001S104
34	.562 (14.3)	.688 (17.5)	.750 (19.1)	770-001S104
05	.625 (15.9)	.750 (19.1)	.812 (20.6)	770-001S104
35	.688 (17.5)	.812 (20.6)	.874 (22.2)	770-001S104
06	.750 (19.1)	.875 (22.2)	.937 (23.8)	770-001S105
36	.812 (20.6)	.938 (23.8)	1.000 (25.4)	770-001S105
07	.875 (22.2)	1.000 (25.4)	1.062 (27.0)	770-001S105
37	.938 (23.8)	1.062 (27.0)	1.124 (28.5)	770-001S105
08	1.000 (25.4)	1.125 (28.6)	1.187 (30.1)	770-001S106
38	1.062 (27.0)	1.188 (30.2)	1.250 (31.8)	770-001S106
09	1.125 (28.6)	1.250 (31.8)	1.312 (33.3)	770-001S107
10	1.250 (31.8)	1.375 (34.9)	1.437 (36.5)	770-001S107
11	1.375 (34.9)	1.500 (38.1)	1.562 (39.7)	770-001S107
12	1.500 (38.1)	1.625 (41.3)	1.687 (42.8)	770-001S107
13	1.625 (41.3)	1.750 (44.5)	1.812 (46.0)	770-001S108
14	1.750 (44.5)	1.875 (47.6)	1.937 (49.2)	770-001S108
15	1.875 (47.6)	2.000 (50.8)	2.062 (52.4)	770-001S109
16	2.000 (50.8)	2.125 (54.0)	2.187 (55.5)	770-001S109

* Glenair Shrink Boot Supplied with "T" Option (see Part Number Development)

TABLE II: FINISHES

Symbol	Finish
B	Cadmium Plate, Olive Drab
C	Anodize, Black
GB	Black Anodize, Hard Coat
M	Electroless Nickel
N	Cad Plate, Olive Drab over Electroless Nickel
NF	Cadmium Plate,Olive Drab over Electroless Nickel
MT	Ni-PTFE *1000 Hour Grey*™ Nickel Fluorocarbon Polymer
Z1	Stainless Steel Passivate
ZL	CRES, Electroless Nickel
ZN	Zinc-Nickel

© 2010 Glenair, Inc. CAGE CODE 06324 Printed in U.S.A.

447-425
EMI/RFI Non-Environmental Band-in-a-Can Backshell With Cable Clamp Strain-Relief
Rotatable Coupling - Standard Profile

Connector Designators:
MIL-DTL-38999 Series I, II (F)
MIL-DTL-38999 Series III and IV (H)

F-H
ROTATABLE COUPLING

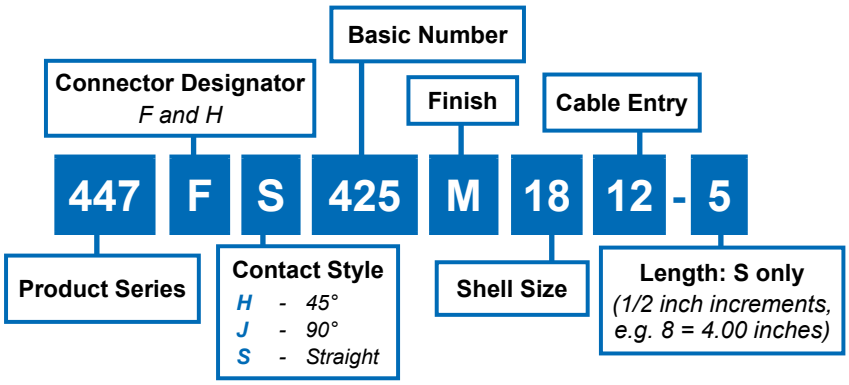

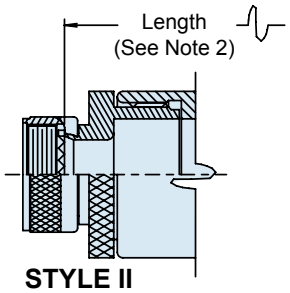

STYLE II
(See Note 3)
STRAIGHT

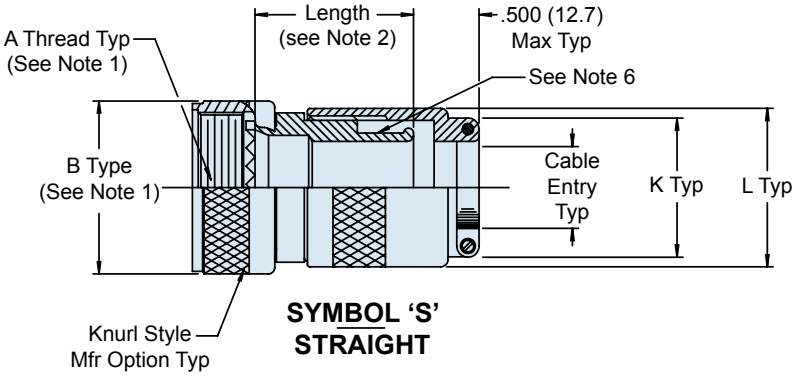

SYMBOL 'S'
STRAIGHT

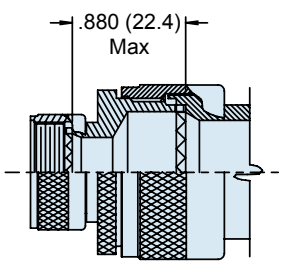

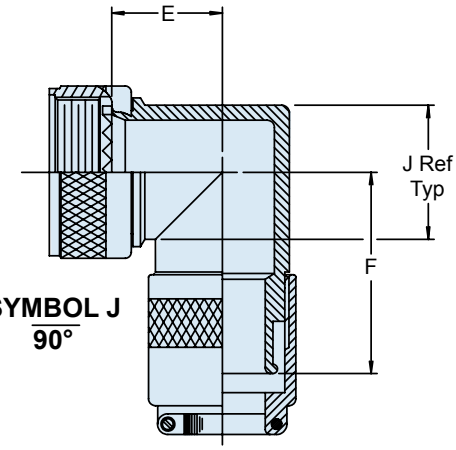

SYMBOL J
90°

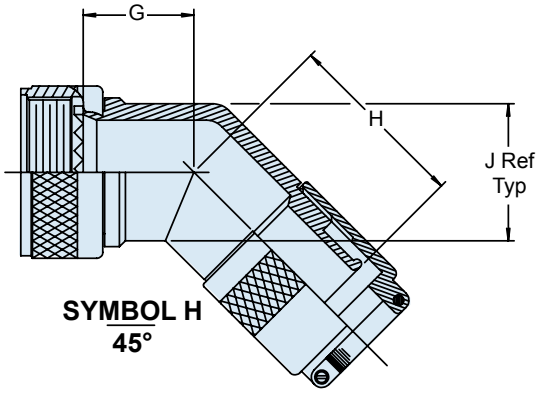

SYMBOL H
45°

H

APPLICATION NOTES

1. Standard minimum length for Style I is 1 inch (25.4), Style II is 1.5 inches (38.1). Consult factory about shorter lengths (Note: Applies to Symbol **S** Straight only).
2. When cable diameter exceeds "Max Dash No" in Table I, Style II will be supplied.
3. For effective grounding, connector with conductive finish should be used.
4. Glenair Series 600 Backshell Assembly tools are recommended for assemply and installation.
5. For shield termination see Glenair Drawings 600-050 and 600-052.
6. Material/Finish:
   Adapters, Elbows, Coupling Nuts, Ferrule, Clamp - Al Alloy/See Table I
   Hardware - Cres/Passivate
7. Metric dimensions (mm) are indicated in parentheses.

© 2010 Glenair, Inc. CAGE CODE 06324 Printed in U.S.A.

447-425
EMI/RFI Non-Environmental Band-in-a-Can Backshell With Cable Clamp Strain-Relief
Rotatable Coupling - Standard Profile

Glenair®

TABLE III: BACKSHELL DIMENSIONS (Continued Below)

Shell Size A,F,L,S	Shell Size H	E Max.	F Max.	G Max.	H Max.	M Max.	N Max.	P Max.
08	09	.639 (16.23)	1.380 (35.05)	.750 (19.05)	1.500 (38.10)	.817 (20.75)	1.057 (26.85)	1.125 (28.58)
10	11	.664 (16.87)	1.410 (35.81)	.810 (20.57)	1.550 (39.37)	.861 (21.87)	1.111 (28.22)	1.250 (31.75)
12	13	.688 (17.48)	1.430 (36.32)	.870 (22.10)	1.610 (40.89)	.911 (23.14)	1.161 (29.49)	1.375 (34.93)
14	15	.705 (17.91)	1.460 (37.08)	.920 (23.37)	1.680 (42.67)	.965 (24.51)	1.215 (30.86)	1.500 (38.10)
16	17	.732 (18.59)	1.480 (37.59)	.980 (24.89)	1.740 (44.20)	1.264 (32.11)	1.625 (41.28)	1.875 (47.63)
18	19	.748 (19.00)	1.490 (37.85)	1.020 (25.91)	1.760 (44.70)	1.064 (27.03)	1.314 (33.38)	1.750 (44.45)
20	21	.773 (19.63)	1.510 (38.35)	1.080 (27.43)	1.820 (46.23)	1.118 (28.40)	1.368 (34.75)	1.875 (47.63)
22	23	.800 (20.32)	1.550 (39.37)	1.140 (28.96)	1.900 (48.26)	1.172 (29.77)	1.422 (36.12)	2.000 (50.80)
24	25	.823 (20.90)	1.580 (40.13)	1.200 (30.48)	1.970 (50.04)	1.221 (31.01)	1.471 (37.36)	2.125 (53.98)
28		.930 (23.62)	1.610 (40.89)	1.380 (35.05)	2.000 (40.80)	1.271 (32,28)	1.522 (38.66)	2.250 (57.15)
32		.980 (24.89)	1.610 (40.89)	1.500 (38.10)	2.000 (40.80)	1.375 (34.93)	1.626 (41.30)	2.500 (63.50)
36		1.040 (26.42)	1.610 (40.89)	1.620 (41.15)	2.040 (51.82)	TBD	TBD	TBD
40		1.100 (27.94)	1.610 (40.89)	1.740 (44.20)	2.150 (54.61)	TBD	TBD	TBD
44		1.150 (29.21)	1.610 (40.89)	1.870 (47.50)	2.280 (57.91)	TBD	TBD	TBD
48		1.200 (30.48)	1.640 (41.66)	1.990 (50.55)	2.400 (60.96)	TBD	TBD	TBD
61		.880 (22.35)	1.580 (40.13)	1.260 (32.00)	1.970 (50.04)	1.221 (31.01)	1.417 (35.99)	2.125 (53.98)

TABLE III: BACKSHELL DIMENSIONS (Continued From Above)

Shell Size A,F,L,S	Shell Size H	R Max.	S Max.	T Max.	U Max.	V Max.	W Max.	Y Max.	Z Ref.	Function C Max. Wire Bundle
08	09	1.375 (34.93)	.520 (13.21)	1.840 (46.74)	.680 (17.27)	1.780 (45.21)	.681 (17.30)	2.120 (53.85)	.340 (8.64)	.250 (6.35)
10	11	1.500 (38.10)	.520 (13.21)	1.900 (48.26)	.750 (19.05)	1.840 (46.74)	.731 (18.57)	2.280 (57.91)	.270 (6.86)	.375 (9.53)
12	13	1.625 (41.28)	.560 (14.22)	1.970 (50.04)	.810 (20.57)	1.910 (48.51)	.731 (18.57)	2.280 (57.91)	.270 (6.86)	.375 (9.53)
14	15	1.750 (44.45)	.620 (15.75)	2.000 (50.80)	.870 (22.10)	1.940 (49.28)	.831 (21.11)	2.350 (59.69)	.280 (7.11)	.500 (12.70)
16	17	.680 (17.27)	2.100 (53.34)	.930 (23.62)	2.040 (51.82)	2.040 (51.82)	.981 (24.92)	2.400 (60.96)	.420 (10.67)	.625 (15.88)
18	19	2.000 (40.80)	.750 (19.05)	2.160 (54.86)	1.000 (25.40)	2.100 (53.34)	1.181 (30.00)	2.430 (61.72)	.640 (16.26)	.625 (15.88)
20	21	2.125 (53.98)	.820 (20.83)	2.220 (56.39)	1.060 (26.92)	2.160 (54.86)	1.181 (30.00)	2.430 (61.72)	.640 (16.26)	.625 (15.88)
22	23	2.250 (57.15)	.880 (22.35)	2.280 (57.91)	1.120 (28.45)	2.220 (56.39)	1.181 (30.00)	2.580 (65.53)	.540 (13.72)	.750 (19.05)
24	25	2.375 (60.33)	.940 (23.88)	2.340 (59.44)	1.180 (29.97)	2.280 (57.91)	1.181 (30.00)	2.580 (65.53)	.540 (13.72)	.750 (19.05)
28		2.500 (63.50)	1.090 (27.69)	2.460 (62.48)	1.340 (34.04)	2.450 (62.23)	TBD	TBD	TBD	TBD
32		2.750 (69.85)	TBD	TBD	TBD	TBD	TBD	TBD	TBD	TBD
36		TBD	TBD	TBD	1.590 (40.39)	2.680 (68.07)	TBD	TBD	TBD	TBD
40		TBD	TBD	TBD	1.720 (43.69)	2.890 (73.41)	TBD	TBD	TBD	TBD
44		TBD	TBD	TBD	TBD	TBD	TBD	TBD	TBD	TBD
48		TBD	TBD	TBD	TBD	TBD	TBD	TBD	TBD	TBD
61		2.375 (60.33)	.940 (23.88)	TBD	1.180 (29.97)	2.290 (58.17)	1.181 (30.00)	2.580 (65.53)	.540 (13.72)	.750 (19.05)

TABLE IV: CABLE ENTRY

Dash No.	K Max.	L Max.	Cable Entry Min.	Cable Entry Max.
10	.220 (5.6)	.1000 (25.4)	.130 (3.3)	.250 (6.4)
12	.310 (7.9)	1.250 (31.8)	.250 (6.4)	.380 (9.7)
14	.440 (11.2)	1.340 (34.0)	.310 (7.9)	.440 (11.2)
16	.560 (14.2)	1.470 (37.3)	.375 (9.5)	.630 (16.0)
18	.630 (16.0)	1.560 (39.6)	.560 (14.2)	.960 (17.5)
20	.750 (19.1)	1.620 (41.1)	.630 (16.0)	.750 (19.1)
22	.880 (22.4)	1.750 (44.5)	.750 (19.1)	.880 (22.4)
24	1.000 (25.4)	1.870 (47.5)	880 (22.4)	1.000 (25.4)
28	1.060 (26.9)	1.970 (50.0)	1.000 (25.4)	1.130 (28.7)
32	1.190 (30.2)	2.090 (53.1)	1.130 (28.7)	1.250 (31.8)

TABLE II: FINISHES

Symbol	Finish
B	Cadmium Plate, Olive Drab
C	Anodize, Black
GB	Black Anodize, Hard Coat
M	Electroless Nickel
N	Cad Plate, Olive Drab over Electroless Nickel
NF	Cadmium Plate, Olive Drab over Electroless Nickel
MT	Ni-PTFE 1000 Hour Grey™ Nickel Fluorocarbon Polymer
Z1	Stainless Steel Passivate
ZL	CRES, Electroless Nickel
ZN	Zinc-Nickel

© 2010 Glenair, Inc.

GLENAIR, INC. • 1211 AIR WAY • GLENDALE, CA 91201-2497 • 818-247-6000 • FAX 818-500-9912
www.glenair.com
E-Mail: sales@glenair.com

620-048
Strain Relief
Self-Locking Rotatable Coupling - Straight and 90°

CONNECTOR DESIGNATOR

MIL-DTL-38999 Series I, II (F)
MIL-DTL-38999 Series III and IV (H)

F-H

SELF-LOCKING ROTATABLE COUPLING

Product Series	Connector Designator	Angle and Profile (S - Straight, A - 90°)	Basic Part No.	Finish	Shell Size
620	F	S	048	M	16

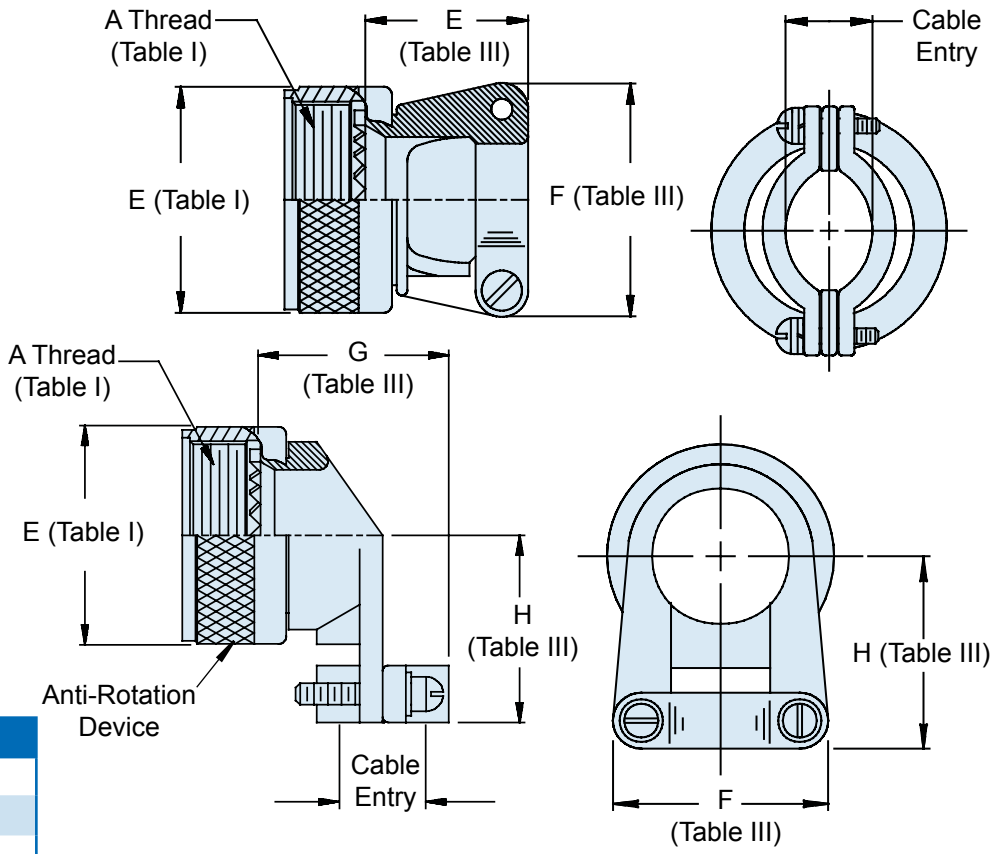

APPLICATION NOTES

1. Cable range is defined as the accommodation range for the wire bundle or cable. Dimensions shown are not intended for inspection criteria.
2. Metric dimensions (mm) are indicated in parentheses.

TABLE II: FINISHES

Symbol	Finish
B	Cadmium Plate, Olive Drab
C	Anodize, Black
G	Hard Coat, Anodic
GB	Black Anodize, Hard Coat
M	Electroless Nickel
N	Cad Plate, Olive Drab over Electroless Nickel
NF	Cadmium Plate, Olive Drab over Electroless Nickel
MT	Nickel Fluorocarbon Polymer
Z1	Stainless Steel Passivate
ZN	Zinc-Nickel

TABLE III: CABLE ENTRY

Shell Size	E Max	F Max	G Max	H Max	Cable Range Closed	Cable Range Open
08/09	.830 (21.1)	.780 (19.8)	.704 (17.9)	.808 (20.5)	.098 (2.5)	.234 (5.9)
10/11	.850 (21.6)	.832 (21.1)	.786 (20.0)	.867 (22.0)	.153 (3.9)	.234 (5.9)
12/13	.900 (22.9)	.988 (25.1)	.979 (24.9)	.929 (23.6)	.190 (4.8)	.328 (8.3)
14/15	.900 (22.9)	1.046 (26.6)	1.039 (26.4)	.992 (25.2)	.260 (6.6)	.457 (11.6)
16/17	.940 (23.9)	1.319 (33.5)	1.188 (30.2)	1.056 (26.8)	.283 (7.2)	.614 (15.6)
18/19	1.020 (25.9)	1.451 (36.9)	1.300 (33.0)	1.233 (31.3)	.325 (8.3)	.634 (16.1)
20/21	1.070 (27.2)	1.557 (39.5)	1.425 (36.2)	1.296 (32.9)	.343 (8.7)	.698 (17.7)
22/23	1.190 (30.2)	1.653 (42.0)	1.550 (39.4)	1.358 (34.5)	.381 (9.7)	.823 (20.9)
24/25	1.220 (31.0)	1.775 (45.1)	1.675 (42.5)	1.420 (36.1)	.418 (10.6)	.853 (21.7)

© 2010 Glenair, Inc. CAGE CODE 06324 Printed in U.S.A.

620-049
Strain Relief
Self-Locking Rotatable Coupling - 45°

CONNECTOR DESIGNATOR

MIL-DTL-38999 Series I, II (F)
MIL-DTL-38999 Series III and IV (H)

F-H

SELF-LOCKING ROTATABLE COUPLING

Product Series	Angle and Profile			Finish		Drain Hole Option (Omit for None)
	B - 45°					
620	F	B	049	M	16	D
	Connector Designator		Basic Part No.		Shell Size	

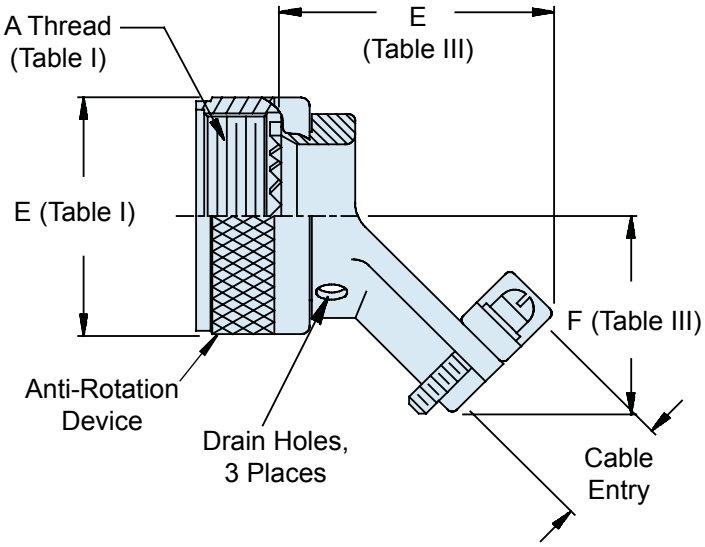

TABLE II: FINISHES

Symbol	Finish
B	Cadmium Plate, Olive Drab
C	Anodize, Black
GB	Black Anodize, Hard Coat
M	Electroless Nickel
N	Cad Plate, Olive Drab over Electroless Nickel
NF	Cadmium Plate, Olive Drab over Electroless Nickel
MT	Ni-PTFE *1000 Hour Grey™* Nickel Fluorocarbon Polymer
Z1	Stainless Steel Passivate
ZN	Zinc-Nickel

TABLE III: CABLE ENTRY

Shell Size	E Max	F Max	Cable Range Closed	Cable Range Open
08/09	1.536 (39.0)	.730 (18.5)	.125 (3.2)	.204 (5.2)
10/11	1.566 (39.8)	.810 (20.6)	.187 (4.7)	.286 (7.3)
12/13	1.646 (41.8)	.870 (22.1)	.291 (7.4)	.416 (10.6)
14/15	1.686 (42.8)	.930 (23.6)	.351 (8.9)	.476 (12.1)
16/17	1.796 (45.6)	.990 (25.1)	.501 (12.7)	.626 (15.9)
18/19	1.906 (48.4)	1.110(28.2)	.518 (13.2)	.706 (17.9)
20/21	1.956 (49.7)	1.170 (29.7)	.581 (14.8)	.831 (21.1)
22/23	1.996 (50.7)	1.240 (31.5)	.644 (16.4)	.956 (24.3)
24/25	2.046 (52.0)	1.300 (33.0)	.706 (17.9)	1.081 (27.5)

APPLICATION NOTES

1. Cable range is defined as the accommodation range for the wire bundle or cable. Dimensions shown are not intended for inspection criteria.
2. Metric dimensions (mm) are indicated in parentheses.

© 2010 Glenair, Inc. CAGE CODE 06324 Printed in U.S.A.

627-122
Composite Self-Locking Rotatable Coupling Swing-Arm Strain Relief
for Connector Designators F & H

CONNECTOR DESIGNATOR
MIL-DTL-38999 Series I, II (F)
MIL-DTL-38999 Series III and IV (H)

F-H
SELF-LOCKING
ROTATABLE COUPLING

Product Series		Basic Number		Shell Size
627	F	122	XO	16
	Connector Designator (F and H)		Finish	

U.S. PATENT NO. 6419519

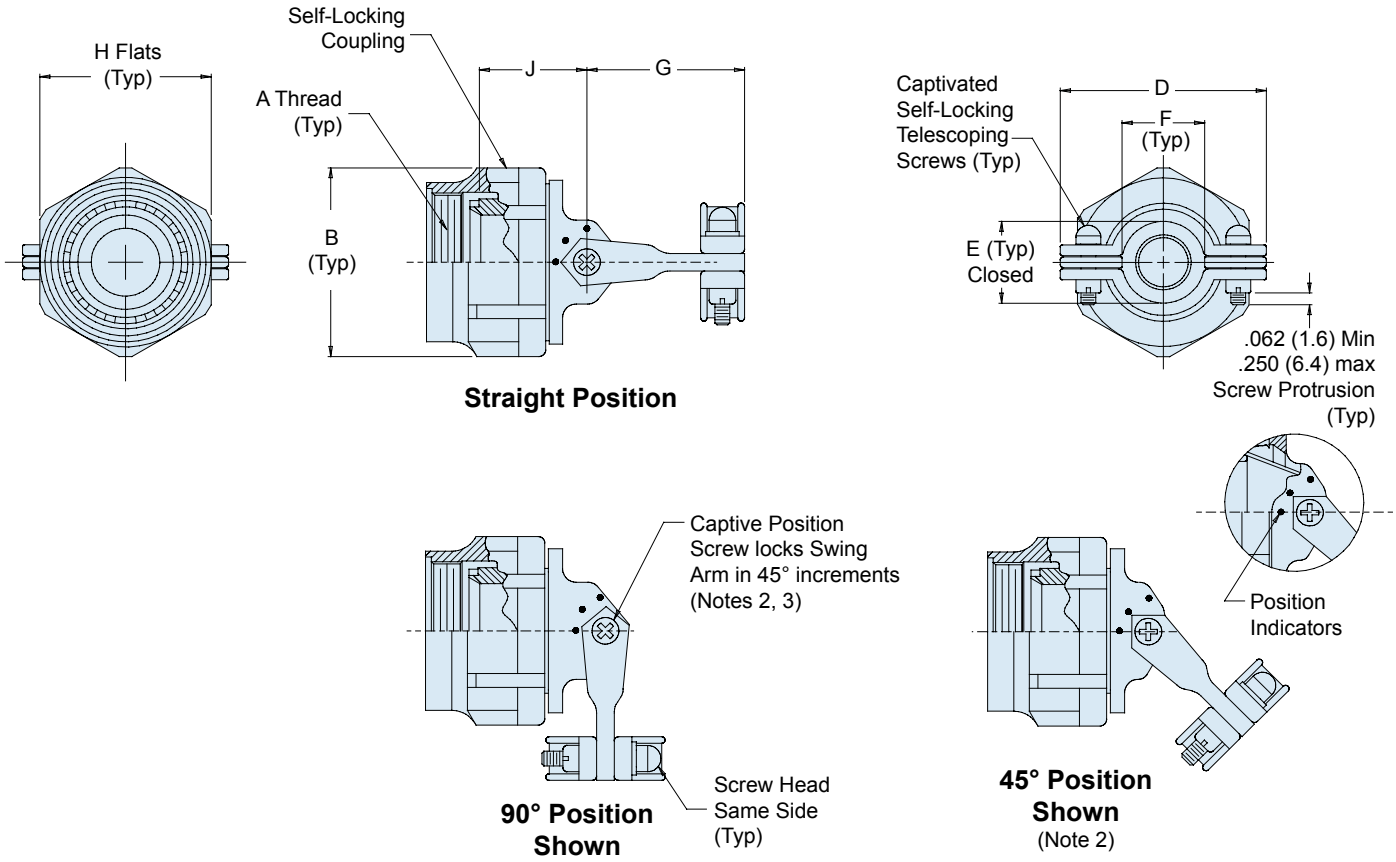

© 2010 Glenair, Inc. CAGE CODE 06324 Printed in U.S.A.

627-122
Composite Self-Locking Rotatable Coupling Swing-Arm Strain Relief
for Connector Designators F & H

Glenair®

TABLE II: FINISHES	
Symbol	**Finish**
XO	Composite Material, No Plating, Color Black and Brown, Brass Interface Shroud and Adapter - Nickel Plated

TABLE III: CONNECTOR SHELL SIZE ORDER NUMBER

Shell Size for Connector Designator F	Shell Size for Connector Designator H	B Dia Max	D Max	E ±.06 (1.5)	F Min	G Max	H Flats Max	H Flats Min	J ±.03 (0.8)
08	**09**	.812 (20.6)	.980 (24.9)	.265 (6.7)	.220 (5.9)	1.060 (26.9)	.750 (19.1)	.736 (18.7)	.880 (22.4)
10	**11**	.938 (23.8)	1.050 (26.7)	.310 (7.9)	.270 (6.9)	1.090 (27.7)	.875 (22.2)	.860 (21.8)	.910 (23.1)
12	**13**	1.125 (28.6)	1.200 (30.5)	.390 (9.9)	.350 (8.9)	1.180 (30.0)	1.000 (25.4)	.980 (24.9)	.950 (24.1)
14	**15**	1.250 (31.8)	1.300 (33.0)	.506 (12.9)	.470 (11.9)	1.240 (31.5)	1.125 (28.6)	1.100 (27.9)	1.010 (25.7)
16	**17**	1.375 (34.9)	1.440 (36.6)	.591 (15.0)	.550 (14.0)	1.320 (33.5)	1.250 (31.8)	1.224 (31.1)	1.050 (26.7)
18	**19**	1.500 (38.1)	1.560 (39.6)	.661 (16.8)	.620 (15.7)	1.390 (35.3)	1.375 (34.9)	1.469 (37.3)	1.080 (30.0)
20	**21**	1.625 (41.3)	1.690 (42.9)	.744 (18.9)	.700 (17.8)	1.550 (39.4)	1.500 (38.1)	1.500 (38.1)	1.120 (28.4)
22	**23**	1.750 (44.5)	1.770 (45.0)	.826 (21.0)	.780 (19.8)	1.550 (39.4)	1.625 (41.3)	1.581 (40.2)	1.160 (29.5)
24	**25**	1.875 (47.6)	1.890 (48.0)	.896 (22.8)	.850 (21.6)	1.610 (40.9)	1.750 (44.5)	1.960 (49.8)	1.200 (30.5)

Consult factory for additional entry sizes available.

APPLICATION NOTES

1. Glenair series 600 Backshell assembly Tools are recommended for assembly and installation.
2. Swing Arm locks in 45° increments–Sizes 08 thru 24, additional positioning increments are manufacturer's option.
3. Captive Screw can remain engaged to the body when positioning the Arm. When tightened, the screw shall not protrude into the inside surfaces.
4. Metric dimensions (mm) are indicated in parentheses.

© 2010 Glenair, Inc. CAGE CODE 06324 Printed in U.S.A.

687-207
Composite MIL-C-85049/93
Banding Split-Ring

For Use with Glenair Banding Backshells and Braid Socks

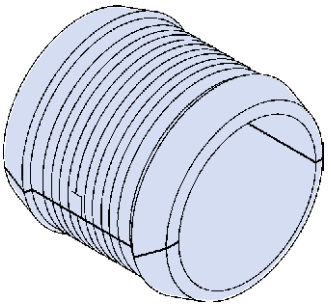

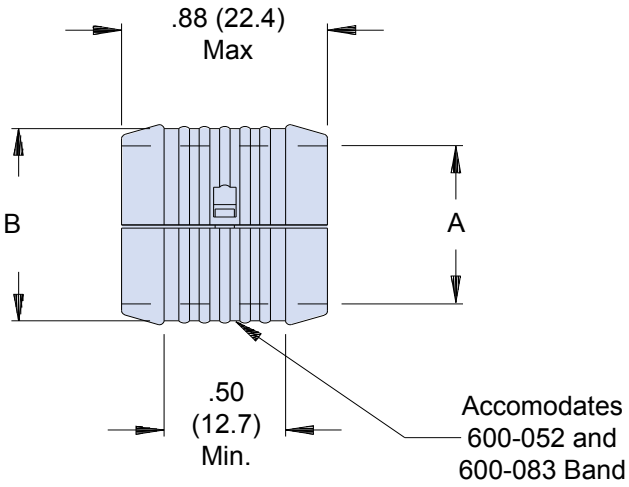

EXAMPLE PART NUMBER:

Basic Number	Dash Number	
687-207	XO	16
	Finish	

TABLE I: DASH NUMBER

Dash No.	A Diameter ± .03	(0.8)	B Diameter ± .03	(0.8)
04	.25	(6.4)	.36	(9.1)
06	.38	(9.7)	.49	(12.4)
08	.50	(12.7)	.61	(15.5)
10	.63	(16.0)	.74	(18.8)
12	.75	(19.1)	.86	(21.8)
14	.88	(22.4)	.99	(25.1)
16	1.00	(25.4)	1.10	(27.9)
18	1.13	(28.7)	1.24	(31.5)
20	1.25	(31.8)	1.36	(34.5)
22	1.38	(35.1)	1.49	(37.8)
24	1.50	(38.1)	1.61	(40.9)
26	1.63	(41.4)	1.74	(44.2)
28	1.75	(44.5)	1.86	(47.2)

EXAMPLE APPLICATION

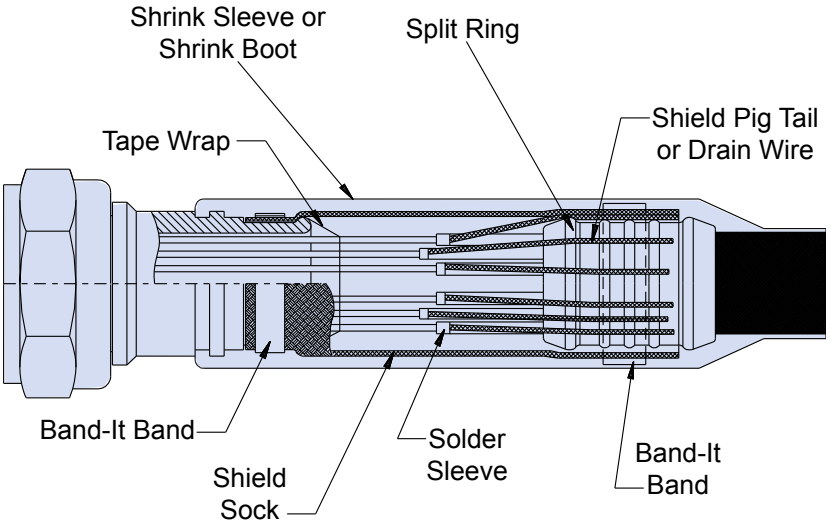

© 2010 Glenair, Inc. CAGE CODE 06324 Printed in U.S.A.

103-026 and -027
100% AmberStrand® Composite Braid and 75% / 25% AmberStrand®/Nickel Copper Braid
for EMI Shielding Applications

Glenair®

Product Series		I.D. Dash Number
103	- 026	- 024
	100% AmberStrand®	

Product Series		I.D. Dash Number
103	- 027	- 024
	75% / 25% Blend	

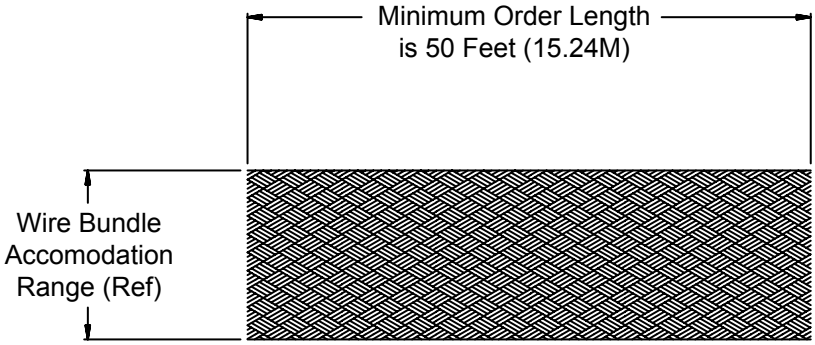

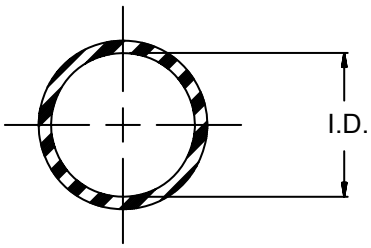

Specify number of feet on purchase order.

103-026 (100% AmberStrand®)

Dash Number	Nominal I.D	Wire Bundle Range	Approximate Grams Per Foot
004	.125 (3.2)	.093 (2.4) .140 (3.5)	1.0
008	.250 (6.4)	.125 (3.2) .312 (7.9)	1.8
012	.375 (9.5)	.250 (6.4) .437 (11.1)	2.3
016	.500 (12.7)	.250 (6.4) .590 (15.0)	3.0
020	.625 (15.9)	.375 (9.5) .700 (17.8)	4.4
024	.750 (19.1)	.500 (12.7) .830 (21.1)	5.2
032	1.000 (25.4)	.780 (19.8) 1.100 (27.94)	8.0
040	1.250 (31.8)	.938 (23.8) 1.312 (33.3)	10.0
048	1.500 (38.1)	1.187 (30.1) 1.590 (40.37)	15.2
064	2.000 (50.8)	1.312 (33.3) 2.090 (50.8)	22.0

103-027 (75% AmberStrand® and 25% Nickel Copper)

Dash Number	Nominal I.D	Wire Bundle Range	Approximate Grams Per Foot
004	.125 (3.2)	.093 (2.4) .140 (3.5)	1.5
008	.250 (6.4)	.125 (3.2) .312 (7.9)	2.4
012	.375 (9.5)	.250 (6.4) .437 (11.1)	3.9
016	.500 (12.7)	.250 (6.4) .590 (15.0)	5.4
020	.625 (15.9)	.375 (9.5) .700 (17.8)	6.4
024	.750 (19.1)	.500 (12.7) .830 (21.1)	7.2
032	1.000 (25.4)	.780 (19.8) 1.100 (27.94)	11.0
040	1.250 (31.8)	.938 (23.8) 1.312 (33.3)	15.0
048	1.500 (38.1)	1.187 (30.1) 1.590 (40.37)	25.2
064	2.000 (50.8)	1.312 (33.3) 2.090 (50.8)	32.0

Metric dimensions (mm) are indicated in parentheses.

© 2010 Glenair, Inc.

GLENAIR, INC. • 1211 AIR WAY • GLENDALE, CA 91201-2497 • 818-247-6000 • FAX 818-500-9912
www.glenair.com E-Mail: sales@glenair.com

100-001
Tubular Metal Braid QQ-B-575B ASTM B33
Tin Coated Copper
for EMI Shielding Applications

Product Series		Dash Number	
100-001	A	203	L

A = 36 AWG (Table I)
B = 34 AWG (Table II)

Lanyard
(Omit for None)

Specify number of feet on purchase order.

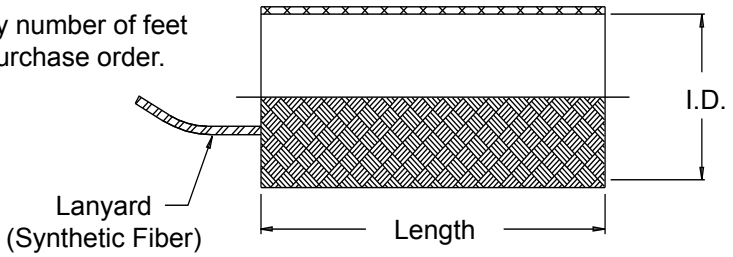

TABLE I: (36 AWG)

Dash No.	Fractional Equivalent	Nominal I.D.	No. of Carriers	No. of Ends	Current Rating Amps	Lbs./100 Ft. (Kg/30.5M)	Federal Specification No.
031	1/32	.031 (0.8)	24	24	7.0	.20 (.09)	QQB575R36T031
062	1/16	.062 (1.6)	24	48	11.0	.40 (.18)	QQB575R36T062
078	5/64	.078 (2.0)	24	72	16.0	.60 (.27)	QQB575R36T078
109	7/64	.109 (2.8)	24	96	19.0	.83 (.38)	QQB575R36T109
125	1/8	.125 (3.2)	24	120	25.0	1.03 (.47)	QQB575R36T125
156	5/32	.156 (4.0)	24	240	40.0	2.09 (.95)	QQB575R36T156
171	11/64	.171 (4.3)	24	168	32.0	1.43 (.65)	QQB575R36T171
188	3/16	.188 (4.8)	24	192	33.0	1.63 (.74)	--
203	13/64	.203 (5.2)	24	312	46.0	2.80 (1.27)	QQB575R36T203
250	1/4	.250 (6.4)	24	384	53.0	3.45 (1.56)	QQB575R36T250
375	3/8	.375 (9.5)	48	384	53.0	3.95 (1.79)	QQB575R36T375
500	1/2	.500 (12.7)	48	528	62.0	4.77 (2.16)	QQB575R36T500
562	9/16	.562 (14.3)	48	624	73.0	5.00 (2.27)	--
625	5/8	.625 (15.9)	48	720	85.0	5.94 (2.69)	--
781	25/32	.781 (19.8)	48	864	88.0	7.35 (3.33)	QQB575R36T781
937	15/16	.937 (23.8)	64	640	65.0	5.83 (2.64)	--
1000	1	1.000 (25.4)	64	768	90.0	7.50 (3.40)	--
1250	1 1/4	1.250 (31.8)	72	792			
1375	1 3/8	1.375 (34.9)	72	864			
1500	1 1/2	1.500 (38.1)	72	936			
2000	2	2.000 (50.8)	96	1152			
2500	2 1/2	2.500 (63.5)	96	1248			

TABLE II: (34 AWG)

Dash No.	Fractional Equivalent	Nominal I.D.	No. of Carriers	No. of Ends	Current Rating Amps	Lbs./100 Ft. (Kg/30.5M)	Federal Specification No.
062	1/16	.062 (1.6)	16	32	11.0	.43 (.20)	QQB575R34T062
109	7/64	.109 (2.8)	16	64	19.0	.82 (.37)	QQB575R34T109
125	1/8	.125 (3.2)	24	72	19.0	.92 (.42)	QQB575R34T125
171	11/64	.171 (4.3)	24	120	36.0	1.56 (.71)	QQB575R34T171
203	13/64	.203 (5.2)	24	192	46.0	2.79 (1.27)	QQB575R34T203
375	3/8	.375 (9.5)	48	240	53.0	3.27 (1.48)	QQB575R34T375
437	7/16	.437 (11.1)	48	288	44.2	3.93 (1.78)	--
500	1/2	.500 (12.7)	48	336	62.0	4.77 (2.16)	QQB575R34T500
781	25/32	.781 (19.8)	48	528	88.0	7.14 (3.24)	QQB575R34T781

APPLICATION NOTES

1. Glenair series 600 Backshell assembly tools are recommended for assembly and installation.
2. Swing Arm locks in 45° increments–Sizes 08 thru 24, additional positioning increments are manufacturer's option.
3. Captive Screw remains engaged to the body when positioning the Arm. When tightened, the Screw shall not protrude into the inside surfaces.
4. Fits Connector Designators: MIL-DTL-38999 Series I, II (F), MIL-DTL-38999 Series III and IV (H), MIL-DTL-5015 (A), and MIL-DTL-26482 (A)
5. Metric Dimensions (mm) are indicated in parentheses.

© 2010 Glenair, Inc. CAGE CODE 06324 Printed in U.S.A.

INDUSTRY-STANDARD METALLIC

EMI/RFI Braided Shielding

100-003 nickel/copper braid

EMI/RFI Shielding
INDUSTRY-STANDARD • METALLIC

A

100-003 TUBULAR METAL BRAID ASTM B355 CLASS 7 OFHC DRAWN NICKEL PLATED COPPER

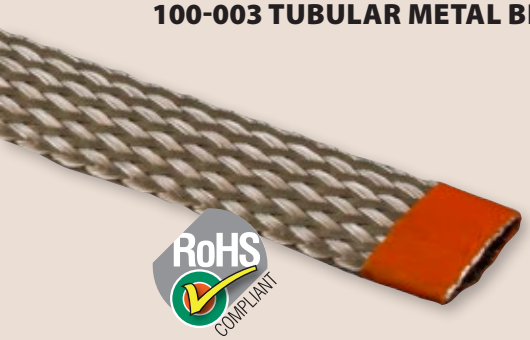

RoHS COMPLIANT

How To Order				
Sample Part Number	**100-003**	**A**	**203**	**L**
Basic No.	Nickel/Copper Braid			
Wire Gage Code	**A** = 36 AWG **B** = 34 AWG **C** = 32 AWG (consult factory) **D** = 30 AWG (consult factory)			
Braid Diameter No.	See Tables I or II			
Lanyard Option	**L** = with lanyard **Omit** = no lanyard			

EMI/RFI Shielding
INDUSTRY-STANDARD • METALLIC

- **Soft-drawn nickel-plated copper braid**
- **EMI frequency effective from 10KHz to 1 GHz**
- **200°C temperature tolerant**
- **125 lbs. pull strength (.500 dia. braid)**
- **500 hours salt spray corrosion resistant**

Table I: 36 AWG

Dash No.	Nominal I.D.	Carriers per Layer	Ends per Layer	Current Rating Amps	Lbs. per 100 ft.
031	.031 (0.8)	24	24	7.0	.20
062	.062 (1.6)	24	48	11.0	.40
078	.078 (2.0)	24	72	16.0	.60
109	.109 (2.8)	24	96	19.0	.83
125	.125 (3.2)	24	120	25.0	1.03
156	.156 (4.0)	24	240	40.0	2.09
171	.171 (4.3)	24	168	32.0	1.43
188	.188 (4.8)	24	192	33.0	1.63
203	.203 (5.2)	24	312	46.0	2.80
250	.250 (6.4)	24	384	53.0	3.45
312	.312 (7.9)	48	288	42.0	2.58
375	.375 (9.5)	48	384	53.0	3.95
437	.437 (11.1)	48	432	57.0	4.28
500	.500 (12.7)	48	528	62.0	4.77
562	.562 (14.3)	48	624	73.0	5.00
625	.625 (15.9)	48	720	85.0	5.94
750	.750 (19.1)	48	768	87.0	6.47
781	.781 (19.8)	48	864	88.0	7.35
937	.937 (23.8)	64	640	65.0	5.83
1000	1.000 (25.4)	64	768	90.0	7.50
1125	1.125 (28.6)	72	792	93.0	7.73
1250	1.250 (31.8)	72	792	93.0	7.73
1375	1.375 (34.9)	72	864	101.0	8.43
1500	1.500 (38.1)	72	936	110.0	9.14
1562	1.562 (39.7)	72	984	115.0	9.60
2000	2.000 (50.8)	96	1152	135.0	13.15
2500	2.500 (63.5)	96	1248	146.0	14.25

Table II: 34 AWG

Dash No.	Nominal I.D.	Carriers per Layer	Ends per Layer	Current Rating Amps	Lbs. per 100 ft.
062	.062 (1.6)	16	32	11.0	.43
109	.109 (2.8)	16	64	19.0	.82
125	.125 (3.2)	24	72	19.0	.92
156	.156 (4.0)	24	144	38.0	1.94
171	.171 (4.3)	24	120	36.0	1.56
203	.203 (5.2)	24	192	46.0	2.79
250	.250 (6.4)	24	216	48.0	3.43
375	.375 (9.5)	48	240	53.0	3.27
437	.437 (11.1)	48	288	44.2	3.93
500	.500 (12.7)	48	336	62.0	4.77
781	.781 (19.8)	48	528	88.0	7.14
1000	1.000 (25.4)	64	576	95.0	7.33
1250	1.250 (31.8)	72	648	108.0	8.23
1500	1.500 (38.1)	72	720	119.0	9.14
1750	1.750 (44.4)	72	864	143.0	10.92
2000	2.000 (50.8)	72	1008	167.0	12.80

Highly conductive nickel-plated copper braid is preferred for its superior handling of temperature cycles above 150°C. Nickel plating is highly resistant to oxidation and will maintain an attractive appearance over time.

NOTES

1. Direct current ratings are given for information only. Values shown are for uninsulated braid in free air, at 30°C (86°F). Actual values will depend on permissible temperature rise, voltage drop and other conditions of service. Values should be de-rated if the braid is insulated or in close contact with other components.
2. Material/Finish:
   Braid - Copper/Nickel plated IAW ASTM B355 Class 7 OFHC
   Lanyard - Synthetic fiber

249-002
Conductive Gasket
to Fit MIL-DTL-38999 Series III
Flange Mount Receptacle Connector

Product Series	Basic Number	Dash Number (See Table I)	Material Symbol (See Table II)
249	002	09	H

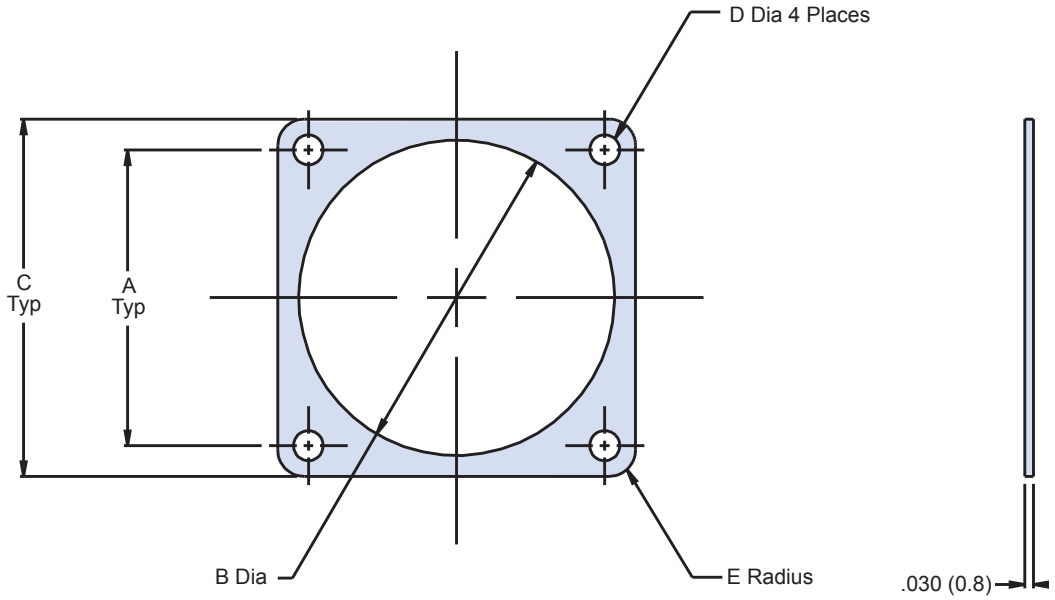

NOTES:

1. Identified by bag and tag in suitable quantities.
2. Metric dimensions (mm) are indicated in parentheses.

© 2010 Glenair, Inc. CAGE CODE 06324 Printed in U.S.A.

249-002
Conductive Gasket
to Fit MIL-DTL-38999 Series III
Flange Mount Receptacle Connector

TABLE I					
Dash Number	A ± .005	Ø B ± .007	C ± .008	Ø D ± .005	E Radius ± .015
-09	.719	.687	.937	.125	.105
-11	.812	.772	1.031	.125	.105
-13	.906	.937	1.125	.125	.105
-15	.969	1.063	1.250	.125	.135
-17	1.062	1.187	1.343	.125	.135
-19	1.156	1.312	1.467	.125	.135
-21	1.250	1.437	1.652	.125	.135
-23	1.375	1.562	1.703	.152	.135
-25	1.500	1.600	1.812	.152	.135

TABLE II	
Designator	Material
C	Flourosilicone Binder with Passivated Silver Plated Aluminum Particles (CHO-Seal in 1298 or Equivalent)
H	Silicone Binder with Silver Plated Copper Particles (CHO-Seal 1215 or Equivalent)

© 2010 Glenair, Inc. CAGE CODE 06324 Printed in U.S.A.

GLENAIR, INC. • 1211 AIR WAY • GLENDALE, CA 91201-2497 • 818-247-6000 • FAX 818-500-9912
www.glenair.com E-Mail: sales@glenair.com

AS85049/94
Full Perimeter Nut Plate for
Flange Mount Receptacle Connector

Basic Number		Shell Size		A - Primer Coat Required
M85049/94	-	10	-	A

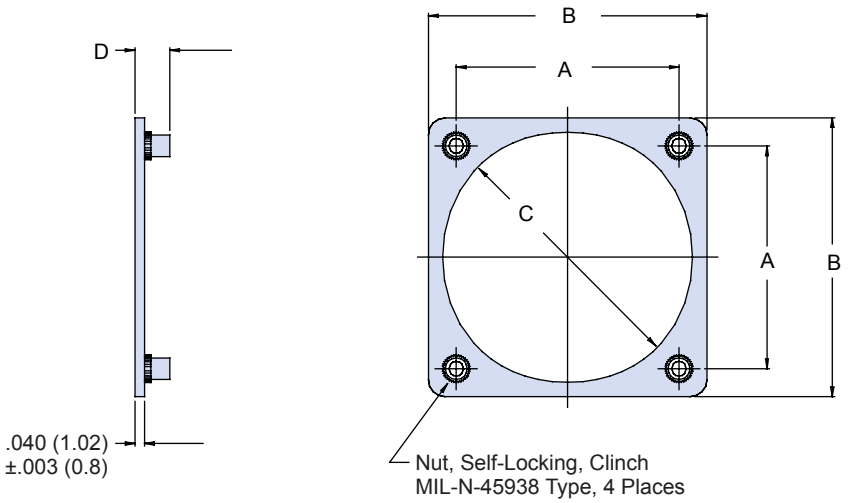

TABLE I

Shell Size	Thread UNJC-3B	A ± .015 (0.38)		B Max.		C ± .015 (.4)		D	
8	4-40	.594	(15.1)	.900	(22.9)	.570	(14.5)	.106	(.166)
10	4-40	.719	(18.3)	1.034	(26.3)	.720	(18.3)	.106	(.166)
12	4-40	.812	(20.6)	1.119	(28.4)	.835	(21.21)	.106	(.166)
14	4-40	.906	(23.0)	1.213	(30.8)	.950	(24.13)	.106	(.166)
16	4-40	.969	(24.6)	1.295	(32.9)	1.085	(27.56)	.106	(.166)
18	4-40	1.062	(27.0)	1.421	(36.1)	1.210	(30.73)	.106	(.166)
20	4-40	1.156	(29.4)	1.550	(39.4)	1.335	(33.91)	.106	(.166)
22	4-40	1.250	(31.8)	1.680	(42.7)	1.470	(37.34)	.106	(.166)
24	6-32	1.375	(34.9)	1.800	(45.7)	1.585	(40.26)	.123	(.183)
25	6-32	1.500	(38.1)	1.910	(48.5)	1.658	(42.11)	.123	(.183)

© 2010 Glenair, Inc. CAGE CODE 06324 Printed in U.S.A.

AS85049/95
3/4 Perimeter Nut Plate for
Flange Mount Receptacle Connector

Glenair®

Basic Number		Shell Size and Class		A - Primer Coat Required
M85049/95	-	10A	-	A

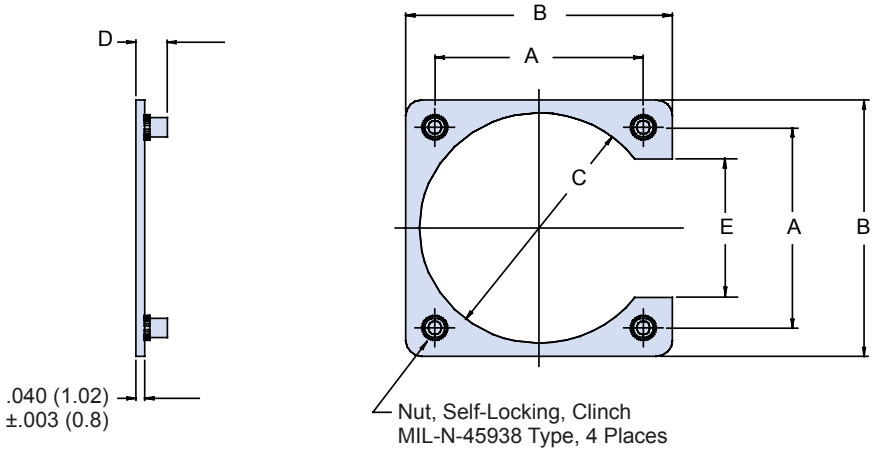

TABLE I

Shell Size	Thread UNJC-3B	A ± .005 (0.13)		B Max		C ± .015		D ± .030 (0.8)		E + .000 (.0) - .030 (.8)	
3A	4-40	.625	(15.9)	.940	(23.9)	.641	(16.3)	.136	(3.5)	.325	(8.3)
7A	4-40	.719	(18.3)	1.034	(26.3)	.688	(17.5)	.136	(3.5)	.433	(11.0)
8A	4-40	.594	(15.1)	.900	(22.9)	.570	(14.5)	.136	(3.5)	.308	(7.8)
10A	4-40	.719	(18.3)	1.034	(26.3)	.720	(18.3)	.136	(3.5)	.433	(11.0)
10B	6-32	.812	(20.6)	1.202	(30.5)	.749	(19.0)	.136	(3.5)	.433	(11.0)
12A	4-40	.812	(20.6)	1.119	(28.4)	.855	(21.7)	.136	(3.5)	.530	(13.5)
12B	6-32	.938	(23.8)	1.327	(33.7)	.938	(23.8)	.153	(3.9)	.526	(13.4)
14A	4-40	.906	(23.0)	1.213	(30.8)	.984	(25.0)	.136	(3.5)	.624	(15.8)
14B	6-32	1.031	(26.2)	1.421	(30.1)	1.031	(26.2)	.153	(3.9)	.620	(15.7)
16A	4-40	.969	(24.6)	1.295	(32.9)	1.094	(27.8)	.136	(3.5)	.687	(17.4)
16B	6-32	1.125	(28.6)	1.515	(38.5)	1.125	(28.6)	.153	(3.9)	.683	(17.3)
18A	4-40	1.062	(27.0)	1.421	(36.1)	1.220	(31.0)	.136	(3.5)	.780	(19.8)
18B	6-32	1.203	(30.6)	1593	(40.5)	1.234	(31.3)	.153	(3.9)	.776	(19.7)
19A	4-40	.906	(23.0)	1.207	(30.7)	.953	(24.2)	.136	(3.5)	.620	(15.7)
20A	4-40	1.156	(29.4)	1.550	(39.4)	1.345	(34.2)	.136	(3.5)	.874	(22.2)
20B	6-32	1.297	(32.9)	1.703	(43.3)	1.359	(34.5)	.153	(3.9)	.865	(22.0)
22A	4-40	1.250	(31.8)	1.680	(42.7)	1.478	(37.5)	.136	(3.5)	.968	(24.6)
22B	6-32	1.375	(34.9)	1.753	(44.5)	1.483	(37.7)	.153	(3.9)	.907	(23.0)
24A	4-40	1.500	(38.1)	1.906	(48.4)	1.560	(39.6)	.153	(3.9)	1.000	(25.4)
24B	6-32	1.375	(34.9)	1.800	(45.7)	1.595	(40.5)	.153	(3.9)	1.031	(26.2)
25A	6-32	1.500	(38.1)	1.906	(48.4)	1.658	(42.1)	.153	(3.9)	1.125	(28.6)
27A	4-40	.969	(24.6)	1.270	(32.3)	1.094	(27.8)	.136	(3.5)	.683	(17.3)
28A	6-32	1.562	(39.7)	2.015	(51.2)	1.820	(46.2)	.153	(3.9)	1.125	(28.6)
32A	6-32	1.750	(44.5)	2.327	(59.1)	2.062	(52.4)	.153	(3.9)	1.188	(30.2)
36A	6-32	1.938	(49.2)	2.515	(63.9)	2.312	(58.7)	.153	(3.9)	1.375	(34.9)
37A	4-40	1.187	(30.1)	1.515	(38.5)	1.281	(32.5)	.136	(3.5)	.874	(22.2)
61A	4-40	1.437	(36.5)	1.827	(46.4)	1.594	(40.5)	.136	(3.5)	1.602	(40.7)

© 2010 Glenair, Inc. CAGE CODE 06324 Printed in U.S.A.

AS85049/96
1/4 Perimeter Nut Plate for
Flange Mount Receptacle Connector

Basic Number — A - Primer Coat Required

M85049/96 - 10 - A

Dash No.

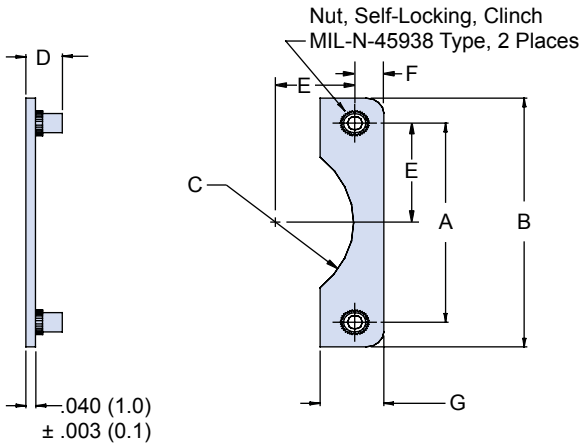

TABLE I

Dash No.	Thread UNJC-3B	A ± .003 (0.1)	B Max	C (Min)	D ± .030 (0.8)	E ± .005 (0.1)	F (Ref)	G Max
3	4-40	.625 (15.9)	.940 (23.9)	.320 (8.1)	.136 (3.5)	.312 (7.92)	.150 (3.81)	.310 (7.87)
7	4-40	.719 (18.3)	1.034 (26.3)	.329 (8.4)	.136 (3.5)	.359 (9.12)	.149 (3.78)	.308 (7.82)
8	4-40	.594 (15.1)	.906 (23.0)	.262 (6.7)	.136 (3.5)	.297 (7.54)	.148 (3.76)	.306 (7.77)
10	4-40	.719 (18.3)	1.034 (26.3)	.344 (8.7)	.136 (3.5)	.359 (9.12)	.149 (3.78)	.308 (7.82)
12	4-40	.812 (20.6)	1.124 (28.6)	.410 (10.4)	.136 (3.5)	.406 (10.31)	.148 (3.76)	.306 (7.77)
14	4-40	.906 (23.0)	1.218 (30.9)	.492 (12.5)	.136 (3.5)	.453 (11.51)	.148 (3.76)	.306 (7.77)
16	4-40	.969 (24.6)	1.295 (32.9)	.532 (13.5)	.136 (3.5)	.484 (12.29)	.149 (3.78)	.308 (7.82)
18	4-40	1.062 (27.0)	1.405 (35.7)	.610 (15.5)	.136 (3.5)	.531 (13.49)	.164 (4.17)	.338 (8.59)
19	4-40	.906 (23.0)	1.218 (30.9)	.461 (11.7)	.136 (3.5)	.453 (11.51)	.148 (3.76)	.306 (7.77)
20	4-40	1.156 (29.4)	1.550 (39.4)	.657 (16.7)	.136 (3.5)	.578 (14.68)	.177 (4.50)	.364 (9.25)
22	4-40	1.250 (31.8)	1.680 (42.7)	.724 (18.4)	.136 (3.5)	.625 (15.88)	.195 (4.95)	.400 (10.16)
24	6-32	1.375 (34.9)	1.800 (45.7)	.782 (19.9)	.153 (3.9)	.687 (17.45)	.193 (4.90)	.396 (10.06)
25	6-32	1.500 (38.1)	1.906 (48.4)	.814 (20.7)	.153 (3.9)	.750 (19.05)	.179 (4.55)	.368 (9.35)
27	4-40	.969 (24.6)	1.281 (32.5)	.547 (13.9)	.136 (3.5)	.484 (12.29)	.149 (3.78)	.308 (7.82)
28	6-32	1.562 (39.7)	2.015 (51.2)	.895 (22.7)	.153 (3.9)	.781 (19.84)	.219 (5.56)	.448 (11.38)
32	6-32	1.750 (44.5)	2.327 (59.1)	1.016 (25.8)	.153 (3.9)	.875 (22.23)	.281 (7.14)	.572 (14.53)
36	6-32	1.938 (49.2)	2.515 (63.9)	1.141 (29.0)	.153 (3.9)	.969 (24.61)	.281 (7.14)	.572 (14.53)
37	4-40	1.187 (30.1)	1.515 (38.5)	.625 (15.9)	.136 (3.5)	.593 (15.06)	.157 (3.99)	.324 (8.23)
61	4-40	1.437 (36.5)	1.827 (46.4)	.732 (18.6)	.136 (3.5)	.718 (18.24)	.188 (4.78)	.386 (9.80)

© 2010 Glenair, Inc. CAGE CODE 06324 Printed in U.S.A.

What's Less than Half the Size and Weight of a D38999 Connector?

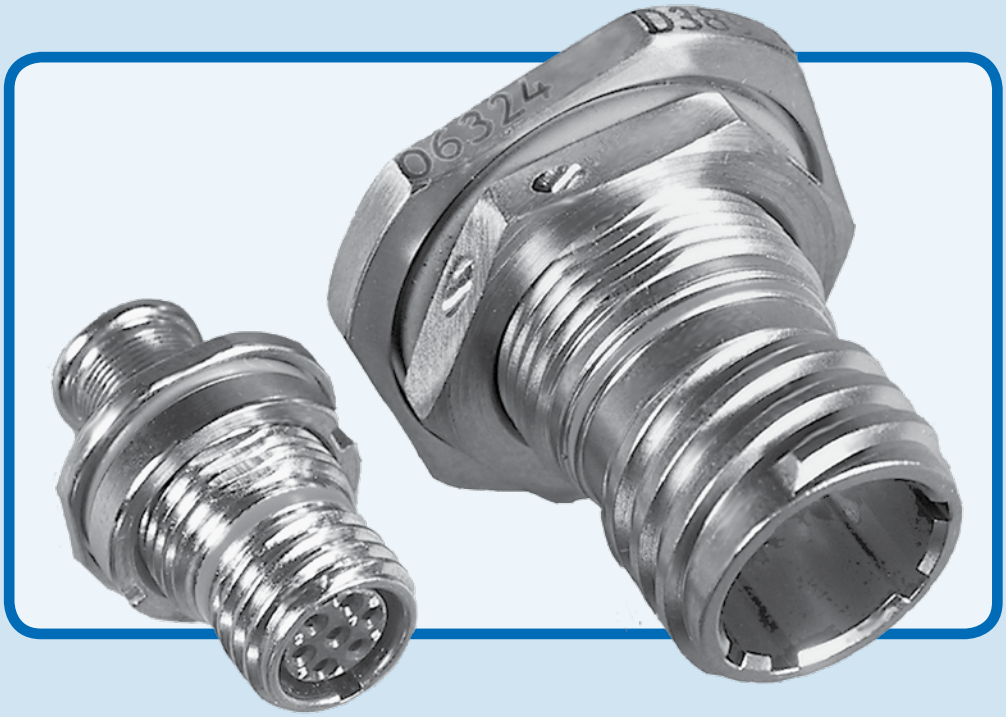

The Glenair Series 80 "Mighty Mouse"

Nothing tells the "Mighty Mouse" story better than the above picture. If your goal is to maintain the performance standards of the D38999 but to reduce the size and weight of the overall interconnect system, than the Series 80 "Mighty Mouse" is the answer. The "Mighty Mouse" offers up to 71% weight savings when compared to aluminum versions of the D38999 Series III.

Compared to composite D38999's the savings top out at 64%. Size reduction is equally dramatic. And the Series 80 "Mighty Mouse" accomodates the same range of wire sizes as the D38999 and matches the product on critical performance requirements such as vibration and shock. Best of all, the product is in stock and ready for immediate shipment.

Glenair®

1211 Air Way
Glendale, California 91201-2497
Telephone: 818-247-6000 · Facsimilie: 818-500-9912 · EMail: sales@glenair.com

United States · United Kingdom · Germany · Nordic · France · Italy · Spain

www.glenair.com

650FS001
Dummy Stowage Receptacle for
MIL-DTL-38999 Series I Connector

Basic Number	Shell Size	
650FS001	M	17

Finish (Table II)

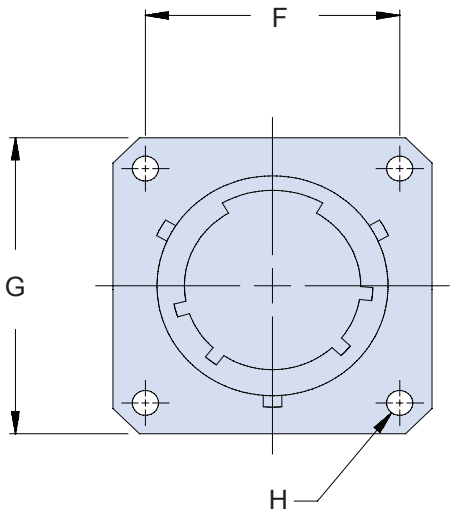

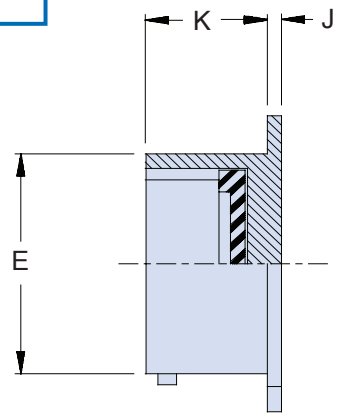

TABLE II: FINISHES

Symbol	Finish
B	Cadmium Plate, Olive Drab
C	Anodize, Black
GB	Black Anodize, Hard Coat
M	Electroless Nickel
N	Cad Plate, Olive Drab over Electroless Nickel
NF	Cadmium Plate, Olive Drab over Electroless Nickel
MT	Ni-PTFE *1000 Hour Grey™* Nickel Fluorocarbon Polymer
ZN	Zinc-Nickel

APPLICATION NOTES

1. See applicable Military Specification for complete dimensions.
2. Metric dimensions (mm) are indicated in parentheses.

TABLE I: DIMENSIONS

Shell Size	E Max	F Dim	G ±.020 (0.5)	H Nom	J +.015 (0.4) -.000	K ±.010 (0.3)
9	572 (14.5)	.719 (18.3)	.938 (23.8)	.128 (3.3)	.085 (2.2)	.727 (18.5)
11	.701 (17.8)	.812 (20.6)	1.031 (26.2)	.128 (3.3)	.085 (2.2)	.727 (18.5)
13	.851 (21.6)	.906 (23.0)	1.125 (28.6)	.128 (3.3)	.085 (2.2)	.727 (18.5)
15	.976 (24.8)	.969 (24.6)	1.219 (31.0)	.128 (3.3)	.085 (2.2)	.727 (18.5)
17	1.101 (28.0)	1.062 (27.0)	1.312 (33.3)	.128 (3.3)	.085 (2.2)	.727 (18.5)
19	1.208 (30.7)	1.156 (29.4)	1.438 (36.5)	.128 (3.3)	.085 (2.2)	.727 (18.5)
21	1.333 (33.9)	1.250 (31.8)	1.562 (39.7)	.128 (3.3)	.115 (2.9)	.697 (17.7)
23	1.458 (37.0)	1.375 (34.9)	1.688 (42.9)	.147 (3.7)	.115 (2.9)	.697 (17.7)
25	1.583 (40.2)	1.500 (38.1)	1.812 (46.0)	.147 (3.7)	.115 (2.9)	.697 (17.7)

© 2010 Glenair, Inc. CAGE CODE 06324 Rev. 04.17.17 Printed in U.S.A.

650FS002
Dummy Stowage Receptacle for
MIL-DTL-38999 Series II Connector

Basic Number	Shell Size	
650FS002	M	16

Finish (Table II)

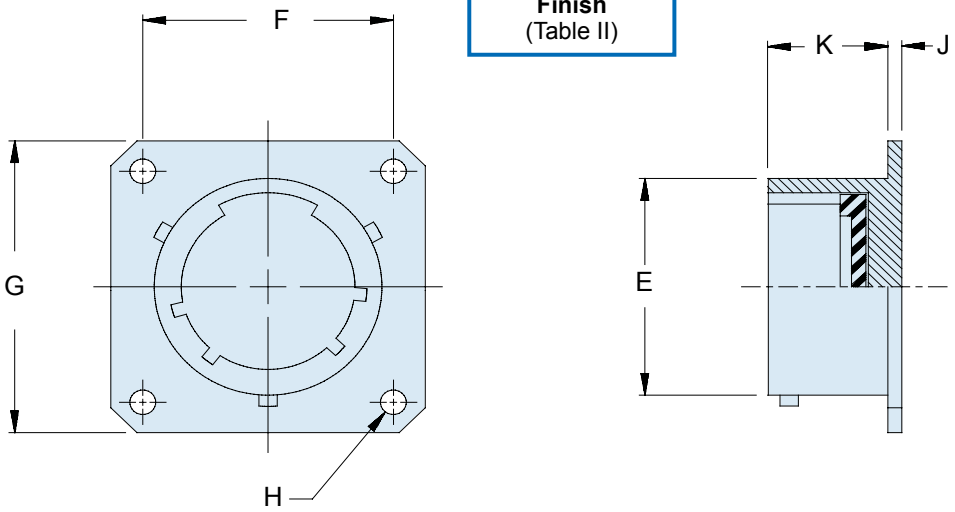

TABLE II: FINISHES

Symbol	Finish
B	Cadmium Plate, Olive Drab
C	Anodize, Black
GB	Black Anodize, Hard Coat
M	Electroless Nickel
N	Cad Plate, Olive Drab over Electroless Nickel
NF	Cadmium Plate, Olive Drab over Electroless Nickel
MT	Ni-PTFE *1000 Hour Grey™* Nickel Fluorocarbon Polymer
ZN	Zinc-Nickel

APPLICATION NOTES

1. See applicable Military Specification for complete dimensions.
2. Metric dimensions (mm) are indicated in parentheses.

TABLE I: DIMENSIONS

Shell Size	E Max	F Dim	G Max	H Nom	J Max	K ±.010 (0.3)
8	474 (12.0)	.594 (15.1)	.828 (21.0)	.120 (3.0)	.069 (1.8)	451 (11.5)
10	.591 (15.0)	.719 (18.3)	.954 (24.2)	.120 (3.0)	.069 (1.8)	.451 (11.5)
12	.751 (19.1)	.812 (20.6)	1.047 (26.6)	.120 (3.0)	.069 (1.8)	.451 (11.5)
14	.876 (22.3)	.906 (23.0)	1.141 (29.0)	.120 (3.0)	.069 (1.8)	.451 (11.5)
16	1.001 (25.4)	.969 (24.6)	1.234 (31.3)	.120 (3.0)	.069 (1.8)	.451 (11.5)
18	1.126 (28.6)	1.062 (27.0)	1.328 (33.7)	.120 (3.0)	.069 (1.8)	.451 (11.5)
20	1.251 (31.8)	1.156 (29.4)	1.453 (36.9)	.120 (3.0)	.069 (1.8)	.451 (11.5)
22	1.376 (35.0)	1.250 (31.8)	1.578 (40.1)	.120 (3.0)	.069 (1.8)	.451 (11.5)
24	1.501 (38.1)	1.375 (34.9)	1.703 (43.3)	.147 (3.7)	.069 (1.8)	.451 (11.5)

© 2010 Glenair, Inc. CAGE CODE 06324 Printed in U.S.A.

650HS010
Dummy Stowage Receptacle for
MIL-DTL-38999 Series III Connector

Basic Number	Shell Size	
650HS010	B	17

Finish (Table II)

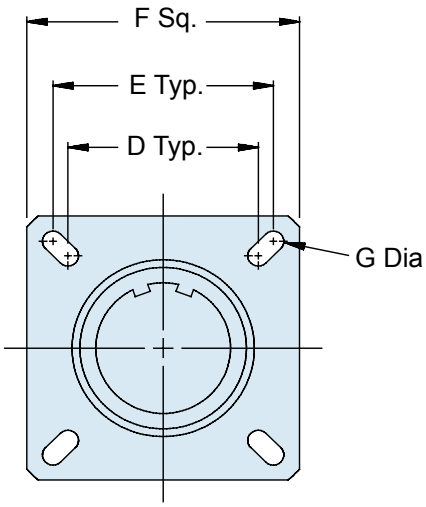

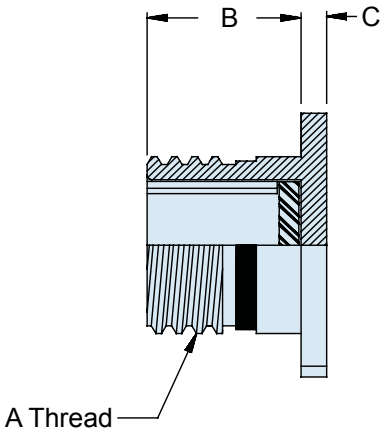

TABLE I: DIMENSIONS

Shell Size	Shell Size Ref	A Thread	B -0.0 +.020 (0.5)	C ±.012 (0.3)	D
A	9	.625-.1P-3LTS	.823 (20.9)	.098 (2.5)	.594 (15.09)
B	11	.750-.1P-3LTS	.823 (20.9)	.098 (2.5)	.719 (18.26)
C	13	.875-.1P-3LTS	.823 (20.9)	.098 (2.5)	.812 (20.62)
D	15	1.000-.1P-3LTS	.823 (20.9)	.098 (2.5)	.906 (23.01)
E	17	1.187-.1P-3LTS	.823 (20.9)	.098 (2.5)	.969 (24.61)
F	19	1.250-.1P-3LTS	.823 (20.9)	.098 (2.5)	1.062 (26.97)
G	21	1.375-.1P-3LTS	.791 (20.1)	.126 (3.2)	1.156 (29.36)
H	23	1.500-.1P-3LTS	.791 (20.1)	.126 (3.2)	1.250 (31.75)
J	25	1.625-.1P-3LTS	.791 (20.1)	.126 (3.2)	1.375 (34.93)

TABLE II: FINISHES

Symbol	Finish
B	Cadmium Plate, Olive Drab
C	Anodize, Black
GB	Black Anodize, Hard Coat
M	Electroless Nickel
N	Cad Plate, Olive Drab over Electroless Nickel
NF	Cadmium Plate, Olive Drab over Electroless Nickel
MT	Ni-PTFE *1000 Hour Grey*™ Nickel Fluorocarbon Polymer
ZN	Zinc-Nickel

TABLE II: DIMENSIONS

Shell Size	Shell Size Ref	E	F ±.012 (0.3)	G Dia ±.008 (0.2)
A	9	.719 (18.26)	.937 (23.8)	.128 (3.25)
B	11	.812 (20.62)	1.031 (26.2)	.128 (3.25)
C	13	.906 (23.01)	1.126 (28.6)	.128 (3.25)
D	15	.969 (24.61)	1.220 (31.0)	.128 (3.25)
E	17	1.062 (26.97)	1.311 (33.3)	.128 (3.25)
F	19	1.156 (29.36)	1.437 (36.5)	.128 (3.25)
G	21	1.250 (31.75)	1.563 (39.7)	.128 (3.25)
H	23	1.375 (34.93)	1.689 (42.9)	.154 (3.91)
J	25	1.500 (38.10)	1.811 (46.0)	.154 (3.91)

APPLICATION NOTES

1. See applicable Military Specification for complete dimensions.
2. Metric dimensions (mm) are indicated in parentheses.

© 2010 Glenair, Inc. CAGE CODE 06324 Printed in U.S.A.

650HS007
Dummy Stowage Receptacle for
MIL-DTL-38999 Series IV Connector

Basic Number	Finish (Table II)	Shell Size
650HS007	M	19

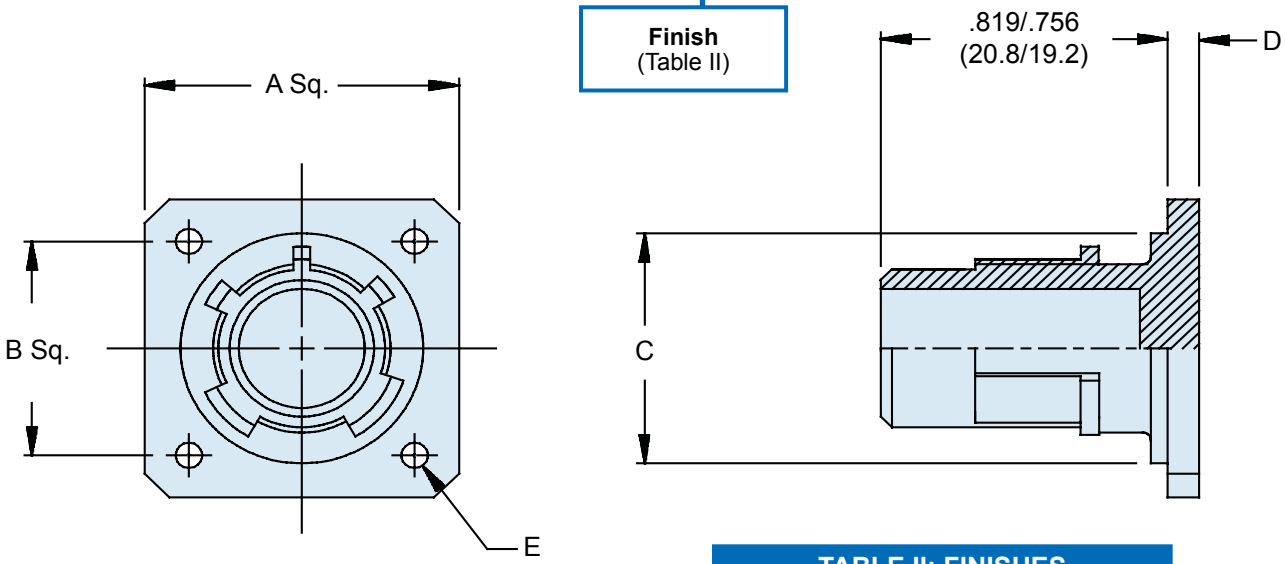

APPLICATION NOTES

1. See applicable Military Specification for complete dimensions.
2. Metric dimensions (mm) are indicated in parentheses.

TABLE II: FINISHES

Symbol	Finish
B	Cadmium Plate, Olive Drab
C	Anodize, Black
GB	Black Anodize, Hard Coat
M	Electroless Nickel
N	Cad Plate, Olive Drab over Electroless Nickel
NF	Cadmium Plate, Olive Drab over Electroless Nickel
MT	Ni-PTFE *1000 Hour Grey*™ Nickel Fluorocarbon Polymer
ZN	Zinc-Nickel

TABLE I: DIMENSIONS

Shell Size	Shell Size Ref	A ±.043 (±1.10)	G BSC	C +0 (0.00) -.015 (-0.39)	J Max	E Dia ±.008 (± 0.2)
B	11	1.030 (26.15)	.812 (20.62)	.793 (20.15)	.093 (2.35)	.130 (3.3)
C	13	1.124 (28.55)	.906 (23.02)	.919 (23.35)	.093 (2.35)	.130 (3.3)
D	15	1.219 (30.95)	.969 (24.62)	1.044 (26.52)	.093 (2.35)	.130 (3.3)
E	17	1.313 (33.35)	1.062 (26.98)	1.170 (29.72)	.093 (2.35)	.130 (3.3)
F	19	1.439 (36.55)	1.156 (29.36)	1.294 (32.87)	.093 (2.35)	.130 (3.3)
G	21	1.561 (39.65)	1.250 (31.76)	1.419 (36.05)	.124 (3.15)	.130 (3.3)
H	23	1.687 (42.85)	1.375 (34.92)	1.544 (39.22)	.124 (3.15)	.142 (3.6)
J	25	1.813 (46.05)	1.500 (38.10)	1.669 (42.40)	.124 (3.15)	.142 (3.6)

© 2010 Glenair, Inc. CAGE CODE 06324 Printed in U.S.A.

660-012 (Plug) - 660-013 (Receptacle)
661-002 (EMI Receptacle)
Protective Covers
MIL-C-38999 Series I

MIL-C-38999 Series I

Basic Part No.
660-012 Plug
660-013 Receptacle
661-002 Receptacle

Attachment Length *(Inches)*

Shell Size

660-012 M 17 S 5 - 04

Finish (Table II)

Attachment Type (Table III)

Ring or Eyelet Dash No. *(Tables IV, V, VI, VII)*

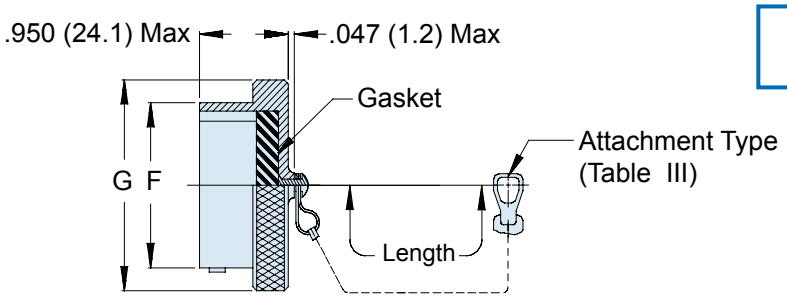

660-012 Plug Cover

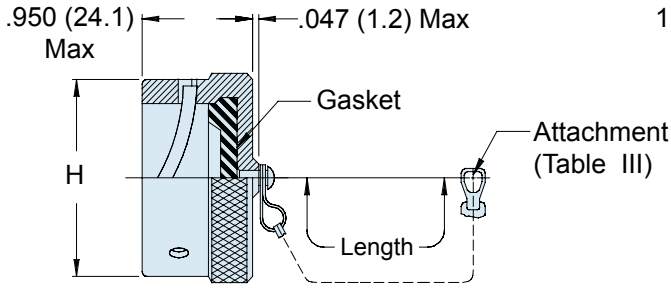

660-013 Receptacle Cover

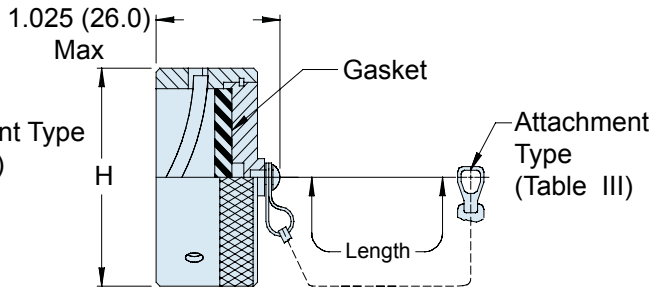

661-002 EMI/RFI Receptacle Cover

TABLE I: SHELL SIZE DIMENSIONS

Shell Size	F Dia	G Dia Max	H Max
09	.572 (14.5)	.820 (20.8)	.844 (21.4)
11	.700 (17.8)	.940 (23.9)	.968 (24.6)
13	.850 (21.6)	1.070 (27.2)	1.125 (28.6)
15	.975 (24.8)	1.190 (30.2)	1.250 (31.8)
17	1.100 (27.9)	1.320 (33.5)	1.406 (35.7)
19	1.207 (30.7)	1.440 (36.6)	1.500 (38.1)
21	1.332 (33.8)	1.570 (39.9)	1.625 (41.3)
23	1.457 (37.0)	1.690 (42.9)	1.750 (44.5)
25	1.582 (40.2)	1.820 (46.2)	1.875 (47.6)

Metric dimensions (mm) are indicated in parentheses.

TABLE II: FINISHES

Symbol	Finish
B	Cadmium Plate, Olive Drab
C	Anodize, Black
GB	Black Anodize, Hard Coat
M	Electroless Nickel
N	Cad Plate, Olive Drab over Electroless Nickel
NF	Cadmium Plate, Olive Drab over Electroless Nickel
MT	Ni-PTFE *1000 Hour Grey™* Nickel Fluorocarbon Polymer
Z1	Stainless Steel Passivate
ZN	Zinc-Nickel

© 2010 Glenair, Inc. CAGE CODE 06324 Printed in U.S.A.

660-012 (Plug) - 660-013 (Receptacle)
661-002 (EMI Receptacle)
Protective Covers
MIL-C-38999 Series I

ROPE
(Types F, G, H, R, T, U)

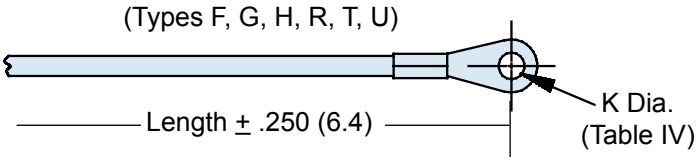

SASH CHAIN
(Type S)

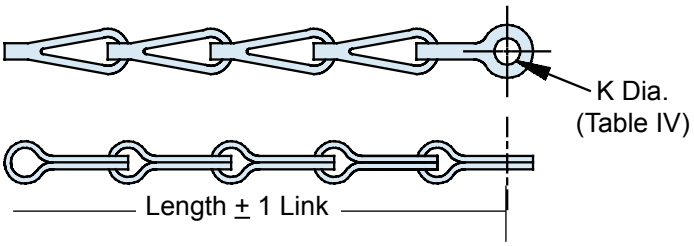

BEAD CHAIN
(Type D)

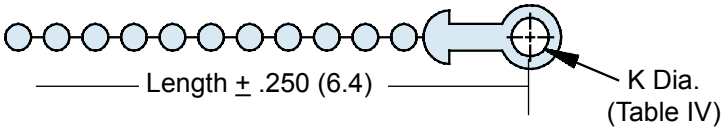

TABLE III: ATTACHMENTS

Sym	Attachment Type
D	Bead Chain, Cres, Passivate
F	Wire Rope, Nylon Jacket
G	Nylon Rope
H	Wire Rope, Teflon Jacket
N	No Attachment
R	Wire Rope, PVC Jacket
S	#8 Sash Chain, Cres, Passivate
T	Wire Rope, No Jacket
U	Wire Rope, Polyurethane Jacket with Terminal

TABLE IV: EYELET

Dash No.	K Dia ±.010 (0.3)
01	.140 (3.6)
02	.182 (4.6)
03	.191 (4.9)
04	.197 (5.0)
05	.167 (4.2)
06	.125 (3.2)
07	.218 (5.5)
09	.156 (4.0)
00	No Eyelet

SPLIT RING - Style C

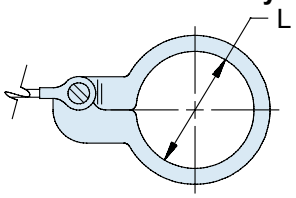

SOLID RING - Style B

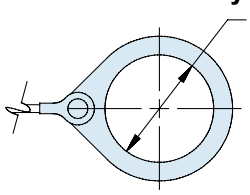

SOLID RING - Style A

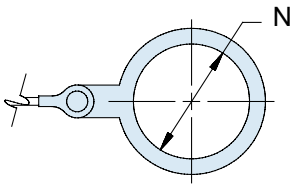

TABLE V: STYLE C RING DIA.

Dash No.	N Dia ±.015 (0.4)	Dash No.	N Dia ±.015 (0.4)
50	.425 (10.8)	74	1.625 (41.3)
52	.485 (12.3)	76	1.750 (44.5)
54	.640 (16.3)	78	1.875 (47.6)
56	.750 (19.1)	80	1.980 (50.3)
58	.890 (22.6)	82	2.060 (52.3)
60	1.015 (25.8)	84	2.235 (56.8)
62	1.095 (27.8)	86	2.310 (58.7)
64	1.130 (28.7)	88	2.475 (62.9)
66	1.250 (31.8)	90	2.655 (67.4)
68	1.350 (34.3)	92	2.810 (71.4)
70	1.390 (35.3)	94	3.045 (77.3)
72	1.485 (37.7)		

TABLE VI: STYLE B RING DIA.

Dash No.	N Dia ±.015 (0.4)	Dash No.	N Dia ±.015 (0.4)
08	.468 (11.9)	24	1.484 (37.7)
10	.593 (15.1)	25	1.577 (40.1)
12	.718 (18.2)	27	1.640 (41.7)
13	.765 (19.4)	28	1.687 (42.8)
14	.844 (21.4)	29	1.765 (44.8)
15	.890 (22.6)	30	1.890 (48.0)
16	.968 (24.6)	31	1.953 (49.6)
17	1.015 (25.8)	32	1.968 (50.0)
18	1.093 (27.8)	33	2.077 (52.8)
19	1.140 (29.0)	35	2.140 (54.4)
20	1.203 (30.6)	36	2.187 (55.5)
21	1.265 (32.1)	40	2.406 (61.1)
22	1.343 (34.1)	44	2.656 (67.5)
23	1.453 (36.9)	48	3.031 (77.0)
		118	.310 (7.9)

TABLE VII: STYLE A RING DIA.

Dash No.	N Dia ±.015 (0.4)	Dash No.	N Dia ±.015 (0.4)
095	.312 (7.9)	109	1.266 (32.2)
100	.391 (9.9)	209	1.312 (33.3)
101	101.516 (13.1)	110	1.391 (35.3)
102	102.583 (14.8)	210	1.438 (36.5)
103	103.641 (16.3)	111	1.521 (38.6)
104	104.708 (18.0)	211	1.536 (39.0)
105	105.766 (19.5)	112	1.641 (41.7)
205	205.788 (20.0)	113	1.766 (44.9)
106	106.896 (22.2)	213	1.812 (46.0)
206	206.907 (23.0)	114	1.891 (48.0)
107	1071.016 (25.8)	214	1.938 (49.2)
207	2071.025 (26.0)	115	2.078 (52.8)
108	1081.141 (29.0)	116	2.406 (61.1)
308	3081.188 (30.2)	117	2.510 (63.8)
208	2081.203 (30.6)		

© 2010 Glenair, Inc.
CAGE CODE 06324
Printed in U.S.A.

660-014 (Plug) - 660-015 (Receptacle)
661-003 (EMI Receptacle)
Protective Covers
MIL-C-38999 Series II

MIL-C-38999 Series II

Basic Part No.
660-014 Plug
660-015 Receptacle
661-003 Receptacle

Attachment Length *(Inches)*

Shell Size

660-014 G 16 S 5 - 04

Finish (Table II)

Attachment Type (Table III)

Ring or Eyelet Dash No. *(Tables IV, V, VI, VII)*

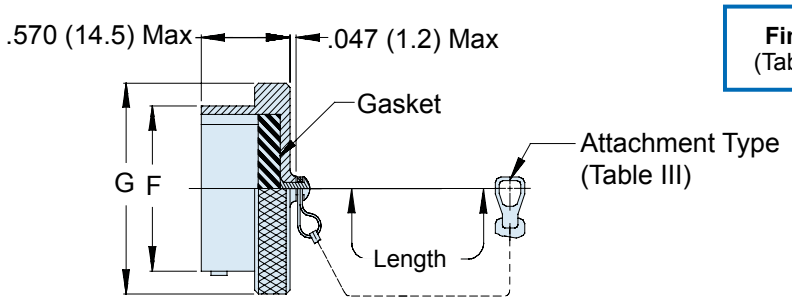

660-014 Plug Cover

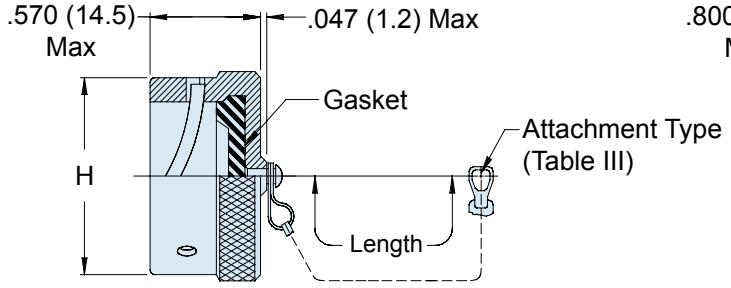

660-015 Receptacle Cover

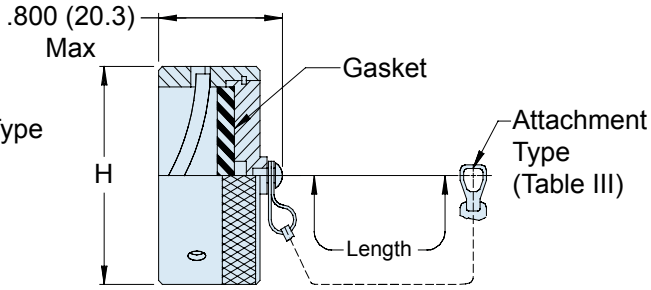

661-003 EMI/RFI Receptacle Cover

SHELL SIZE DIMENSIONS

Shell Size	F Dia	G Dia Max	H Max
08	.473 (12.0)	.720 (18.3)	.719 (18.3)
10	.590 (15.0)	.850 (21.6)	.812 (20.6)
12	.750 (19.1)	1.000 (25.4)	1.000 (25.4)
14	.875 (22.2)	1.130 (28.7)	1.125 (28.6)
16	1.000 (25.4)	1.250 (31.8)	1.250 (31.8)
18	1.125 (28.6)	1.380 (35.1)	1.375 (34.9)
20	1.250 (31.8)	1.500 (38.1)	1.500 (38.1)
22	1.375 (34.9)	1.630 (41.4)	1.625 (41.3)
24	1.500 (38.1)	1.750 (44.5)	1.750 (44.5)

Metric dimensions (mm) are indicated in parentheses.

TABLE II: FINISHES

Symbol	Finish
B	Cadmium Plate, Olive Drab
C	Anodize, Black
GB	Black Anodize, Hard Coat
M	Electroless Nickel
N	Cad Plate, Olive Drab over Electroless Nickel
NF	Cadmium Plate, Olive Drab over Electroless Nickel
MT	Ni-PTFE *1000 Hour Grey™* Nickel Fluorocarbon Polymer
Z1	Stainless Steel Passivate
ZN	Zinc-Nickel

© 2010 Glenair, Inc. CAGE CODE 06324 Printed in U.S.A.

660-014 (Plug) - 660-015 (Receptacle)
661-003 (EMI Receptacle)
Protective Covers
MIL-C-38999 Series II

ROPE
(Types F, G, H, R, T, U)

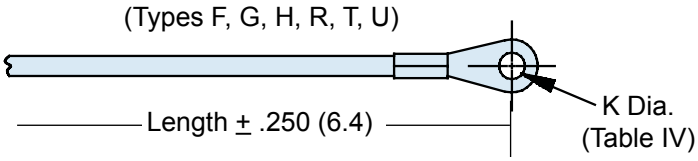

SASH CHAIN
(Type S)

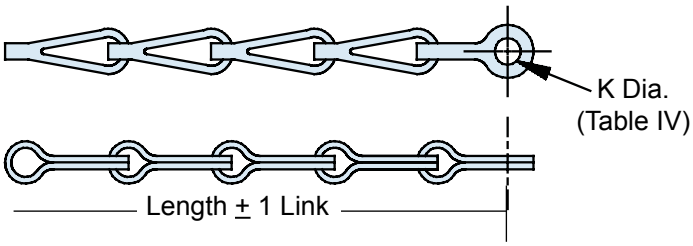

BEAD CHAIN
(Type D)

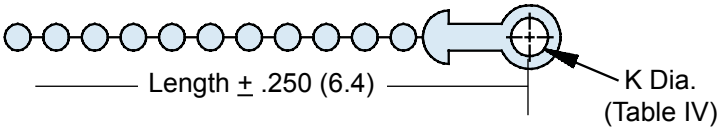

SPLIT RING - Style C

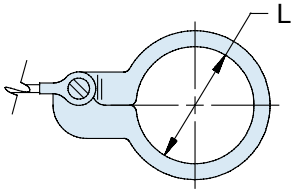

SOLID RING - Style B

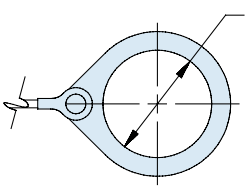

SOLID RING - Style A

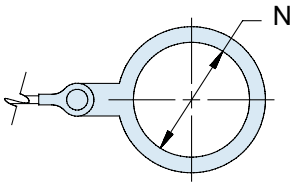

TABLE III: ATTACHMENTS

Sym	Attachment Type
D	Bead Chain, Cres, Passivate
F	Wire Rope, Nylon Jacket
G	Nylon Rope
H	Wire Rope, Fluoropolymer Jacket
N	No Attachment
R	Wire Rope, PVC Jacket
S	#8 Sash Chain, Cres, Passivate
T	Wire Rope, No Jacket
U	Wire Rope, Polyurethane Jacket with Terminal

TABLE IV: EYELET

Dash No.	K Dia ±.010 (0.3)
01	.140 (3.6)
02	.182 (4.6)
03	.191 (4.9)
04	.197 (5.0)
05	.167 (4.2)
06	.125 (3.2)
07	.218 (5.5)
09	.156 (4.0)
00	No Eyelet

TABLE V: STYLE C RING DIA.

Dash No.	N Dia ±.015 (0.4)	Dash No.	N Dia ±.015 (0.4)
50	.425 (10.8)	74	1.625 (41.3)
52	.485 (12.3)	76	1.750 (44.5)
54	.640 (16.3)	78	1.875 (47.6)
56	.750 (19.1)	80	1.980 (50.3)
58	.890 (22.6)	82	2.060 (52.3)
60	1.015 (25.8)	84	2.235 (56.8)
62	1.095 (27.8)	86	2.310 (58.7)
64	1.130 (28.7)	88	2.475 (62.9)
66	1.250 (31.8)	90	2.655 (67.4)
68	1.350 (34.3)	92	2.810 (71.4)
70	1.390 (35.3)	94	3.045 (77.3)
72	1.485 (37.7)		

TABLE VI: STYLE B RING DIA.

Dash No.	N Dia ±.015 (0.4)	Dash No.	N Dia ±.015 (0.4)
08	.468 (11.9)	24	1.484 (37.7)
10	.593 (15.1)	25	1.577 (40.1)
12	.718 (18.2)	27	1.640 (41.7)
13	.765 (19.4)	28	1.687 (42.8)
14	.844 (21.4)	29	1.765 (44.8)
15	.890 (22.6)	30	1.890 (48.0)
16	.968 (24.6)	31	1.953 (49.6)
17	1.015 (25.8)	32	1.968 (50.0)
18	1.093 (27.8)	33	2.077 (52.8)
19	1.140 (29.0)	35	2.140 (54.4)
20	1.203 (30.6)	36	2.187 (55.5)
21	1.265 (32.1)	40	2.406 (61.1)
22	1.343 (34.1)	44	2.656 (67.5)
23	1.453 (36.9)	48	3.031 (77.0)
		118	.310 (7.9)

TABLE VII: STYLE A RING DIA.

Dash No.	N Dia ±.015 (0.4)	Dash No.	N Dia ±.015 (0.4)
095	.312 (7.9)	109	1.266 (32.2)
100	.391 (9.9)	209	1.312 (33.3)
101	.516 (13.1)	110	1.391 (35.3)
102	.583 (14.8)	210	1.438 (36.5)
103	.641 (16.3)	111	1.521 (38.6)
104	.708 (18.0)	211	1.536 (39.0)
105	.766 (19.5)	112	1.641 (41.7)
205	.788 (20.0)	113	1.766 (44.9)
106	.896 (22.7)	213	1.812 (46.0)
206	.907 (23.0)	114	1.891 (48.0)
107	1.016 (25.8)	214	1.938 (49.2)
207	1.025 (26.0)	115	2.078 (52.8)
108	1.141 (29.0)	116	2.406 (61.1)
308	1.188 (30.2)	117	2.510 (63.8)
208	1.203 (30.6)		

© 2010 Glenair, Inc.

GLENAIR, INC. • 1211 AIR WAY • GLENDALE, CA 91201-2497 • 818-247-6000 • FAX 818-500-9912
www.glenair.com
E-Mail: sales@glenair.com

660-023 (Plug) - 660-024 (Receptacle)
Protective Covers
MIL-C-38999 Series III Threaded

MIL-C-38999 Series III

Basic Part No.	Finish	Shell Size	Attachment Type	Attachment Length (Inches)	Ring or Eyelet Dash No.
660-023	M	15	S	5	04

Basic Part No.: *660-023 Plug*, *660-024 Receptacle*

Finish (Table II)

Attachment Type (Table III)

Attachment Length *(Inches)*

Ring or Eyelet Dash No. *(Tables IV, V, VI, VII)*

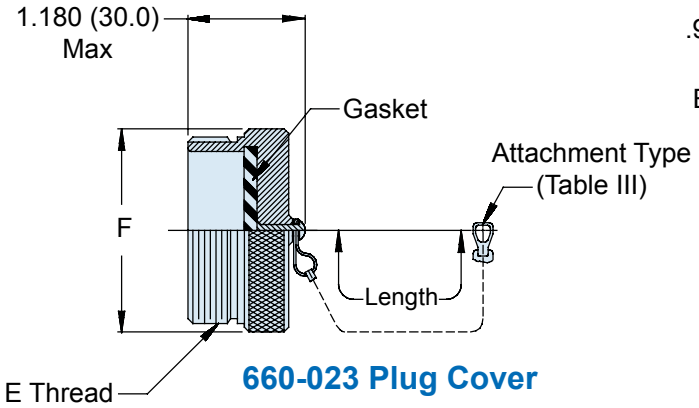

660-023 Plug Cover

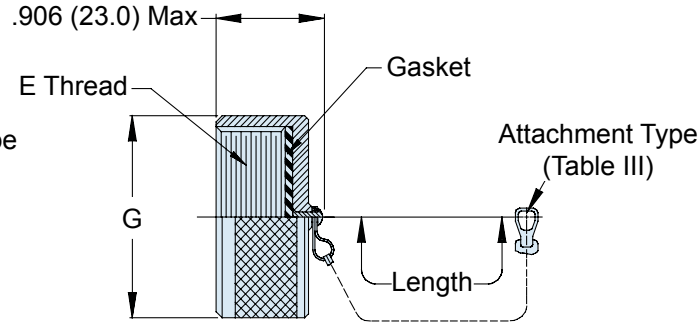

660-024 Receptacle Cover

SHELL SIZE DIMENSIONS

Shell Size	Shell Size Code Ref.	E Thread	F Max	G Max
09	A	.6250-0.1P-0.3L-TS	.906 (23.0)	.906 (23.0)
11	B	.7500-0.1P-0.3L-TS	1.024 (26.0)	1.102 (28.0)
13	C	.8750-0.1P-0.3L-TS	1.220 (31.0)	1.220 (31.0)
15	D	1.0000-0.1P-0.3L-TS	1.300 (33.0)	1.260 (32.0)
17	E	1.1875-0.1P-0.3L-TS	1.457 (37.0)	1.457 (37.0)
19	F	1.2500-0.1P-0.3L-TS	1.575 (40.0)	1.535 (39.0)
21	G	1.3750-0.1P-0.3L-TS	1.732 (44.0)	1.654 (42.0)
23	H	1.5000-0.1P-0.3L-TS	1.811 (46.0)	1.772 (45.0)
25	J	1.6250-0.1P-0.3L-TS	1.969 (50.0)	1.929 (49.0)

Metric dimensions (mm) are indicated in parentheses.

TABLE II: FINISHES

Symbol	Finish
B	Cadmium Plate, Olive Drab
C	Anodize, Black
GB	Black Anodize, Hard Coat
M	Electroless Nickel
N	Cad Plate, Olive Drab over Electroless Nickel
NF	Cadmium Plate, Olive Drab over Electroless Nickel
MT	Ni-PTFE *1000 Hour Grey™* Nickel Fluorocarbon Polymer
Z1	Stainless Steel Passivate
ZN	Zinc-Nickel

© 2010 Glenair, Inc. CAGE CODE 06324 Printed in U.S.A.

660-023 (Plug) - 660-024 (Receptacle) Protective Covers

MIL-C-38999 Series III Threaded

ROPE
(Types F, G, H, R, T, U)

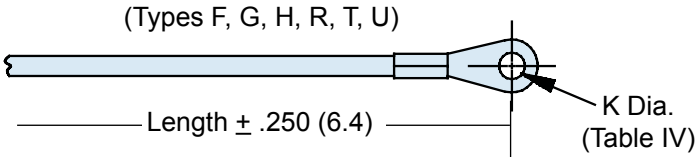

SASH CHAIN
(Type S)

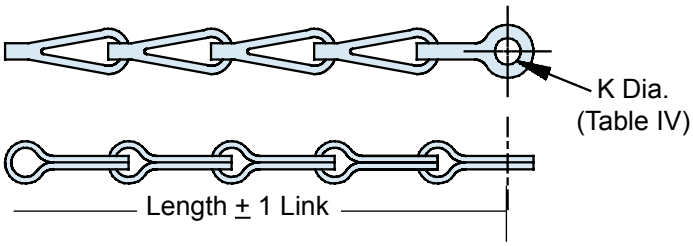

BEAD CHAIN
(Type D)

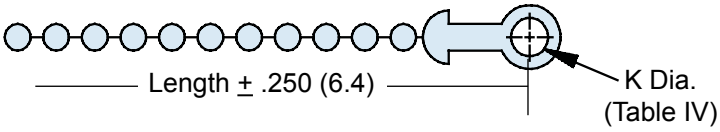

SPLIT RING - Style C

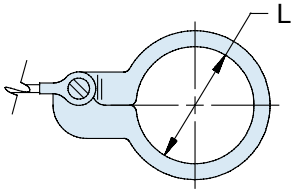

SOLID RING - Style B

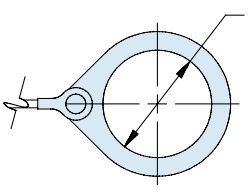

SOLID RING - Style A

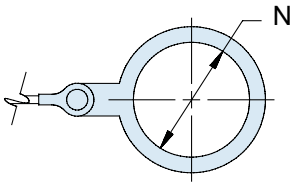

TABLE III: ATTACHMENTS

Sym	Attachment Type
D	Bead Chain, Cres, Passivate
F	Wire Rope, Nylon Jacket
G	Nylon Rope
H	Wire Rope, Fluoropolymer Jacket
N	No Attachment
R	Wire Rope, PVC Jacket
S	#8 Sash Chain, Cres, Passivate
T	Wire Rope, No Jacket
U	Wire Rope, Polyurethane Jacket with Terminal

TABLE IV: EYELET

Dash No.	K Dia ±.010 (0.3)
01	.140 (3.6)
02	.182 (4.6)
03	.191 (4.9)
04	.197 (5.0)
05	.167 (4.2)
06	.125 (3.2)
07	.218 (5.5)
09	.156 (4.0)
00	No Eyelet

TABLE V: STYLE C RING DIA.

Dash No.	N Dia ±.015 (0.4)	Dash No.	N Dia ±.015 (0.4)
50	.425 (10.8)	74	1.625 (41.3)
52	.485 (12.3)	76	1.750 (44.5)
54	.640 (16.3)	78	1.875 (47.6)
56	.750 (19.1)	80	1.980 (50.3)
58	.890 (22.6)	82	2.060 (52.3)
60	1.015 (25.8)	84	2.235 (56.8)
62	1.095 (27.8)	86	2.310 (58.7)
64	1.130 (28.7)	88	2.475 (62.9)
66	1.250 (31.8)	90	2.655 (67.4)
68	1.350 (34.3)	92	2.810 (71.4)
70	1.390 (35.3)	94	3.045 (77.3)
72	1.485 (37.7)		

TABLE VI: STYLE B RING DIA.

Dash No.	N Dia ±.015 (0.4)	Dash No.	N Dia ±.015 (0.4)
08	.468 (11.9)	24	1.484 (37.7)
10	.593 (15.1)	25	1.577 (40.1)
12	.718 (18.2)	27	1.640 (41.7)
13	.765 (19.4)	28	1.687 (42.8)
14	.844 (21.4)	29	1.765 (44.8)
15	.890 (22.6)	30	1.890 (48.0)
16	.968 (24.6)	31	1.953 (49.6)
17	1.015 (25.8)	32	1.968 (50.0)
18	1.093 (27.8)	33	2.077 (52.8)
19	1.140 (29.0)	35	2.140 (54.4)
20	1.203 (30.6)	36	2.187 (55.5)
21	1.265 (32.1)	40	2.406 (61.1)
22	1.343 (34.1)	44	2.656 (67.5)
23	1.453 (36.9)	48	3.031 (77.0)
		118	.310 (7.9)

TABLE VII: STYLE A RING DIA.

Dash No.	N Dia ±.015 (0.4)	Dash No.	N Dia ±.015 (0.4)
095	.312 (7.9)	109	1.266 (32.2)
100	.391 (9.9)	209	1.312 (33.3)
101	.516 (13.1)	110	1.391 (35.3)
102	.583 (14.8)	210	1.438 (36.5)
103	.641 (16.3)	111	1.521 (38.6)
104	.708 (18.0)	211	1.536 (39.0)
105	.766 (19.5)	112	1.641 (41.7)
205	.788 (20.0)	113	1.766 (44.9)
106	.896 (22.2)	213	1.812 (46.0)
206	.907 (23.0)	114	1.891 (48.0)
107	1.016 (25.8)	214	1.938 (49.2)
207	1.025 (26.0)	115	2.078 (52.8)
108	1.141 (29.0)	116	2.406 (61.1)
308	1.188 (30.2)	117	2.510 (63.8)
208	1.203 (30.6)		

© 2010 Glenair, Inc.

GLENAIR, INC. • 1211 AIR WAY • GLENDALE, CA 91201-2497 • 818-247-6000 • FAX 818-500-9912
www.glenair.com
E-Mail: sales@glenair.com

660-031 (Receptacle) - 660-032 (Plug) Protective Covers
MIL-C-38999 Series IV

MIL-C-38999 Series IV

Basic Part No.
660-031 Receptacle
660-032 Plug

Attachment Length *(Inches)*

Shell Size

660-031 M 19 S 6 - 01 G

Finish (Table II)

Ring or Eyelet Dash No. *(Tables IV, V, VI, VII)*

Attachment Type (Table III)

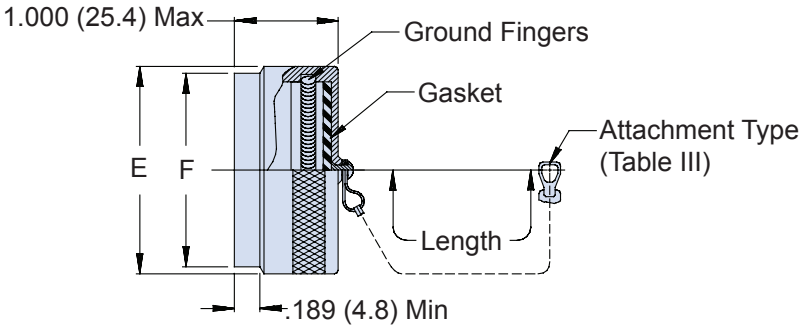

660-031 Receptacle Cover

TABLE II: FINISHES	
Symbol	**Finish**
MT	Ni-PTFE
M	Electroless Nickel
NF	Cadmium Plate, Olive Drab over Electroless Nickel

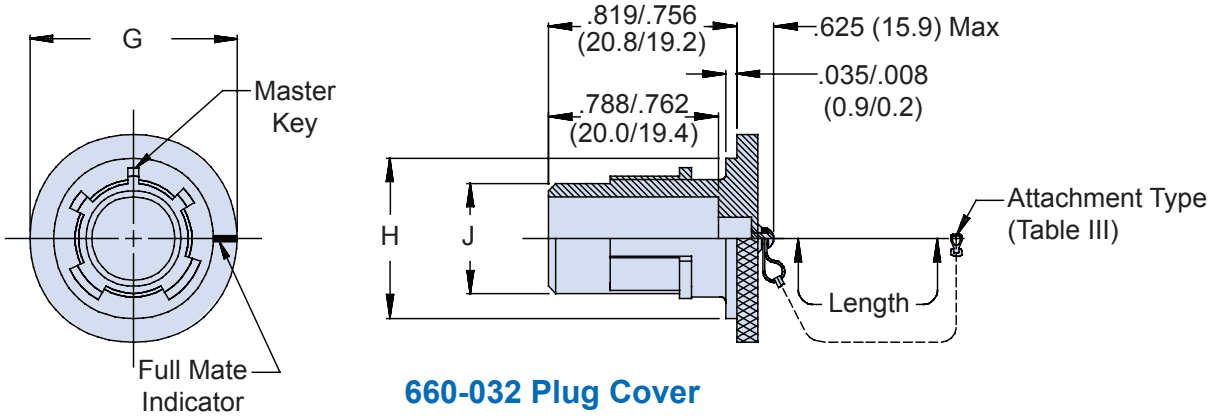

660-032 Plug Cover

SHELL SIZE DIMENSIONS						
Shell Size	**Shell Size Code Ref.**	**E Dia Max**	**F Dia Max**	**G Dia Max**	**H Dia +0.0 (+0.0) -.015 (-0.4)**	**J Dia +0.0 (+0.0) -.015 (-0.4)**
11	B	.875 (22.2)	.775 (19.7)	1.180 (30.0)	.793 (20.1)	.509 (12.9)
13	C	1.000 (25.4)	.901 (22.9)	1.320 (33.5)	.919 (23.3)	.634 (16.1)
15	D	1.125 (28.6)	1.039 (26.4)	1.440 (36.6)	1.044 (26.5)	.759 (19.3)
17	E	1.250 (31.8)	1.150 (29.2)	1.560 (39.6)	1.170 (29.7)	.885 (22.5)
19	F	1.375 (34.9)	1.276 (32.4)	1.680 (42.7)	1.294 (32.9)	1.009 (25.6)
21	G	1.500 (38.1)	1.402 (35.6)	1.820 (46.2)	1.419 (36.0)	1.134 (28.8)
23	H	1.625 (41.3)	1.528 (38.8)	1.940 (49.3)	1.544 (39.2)	1.259 (32.0)
25	J	1.750 (44.5)	1.650 (41.9)	2.060 (52.3)	1.669 (42.4)	1.384 (35.2)

Metric dimensions (mm) are indicated in parentheses.

© 2010 Glenair, Inc. CAGE CODE 06324 Printed in U.S.A.

660-031 (Receptacle) - 660-032 (Plug)
Protective Covers
MIL-C-38999 Series IV

ROPE
(Types F, G, H, R, T, U)

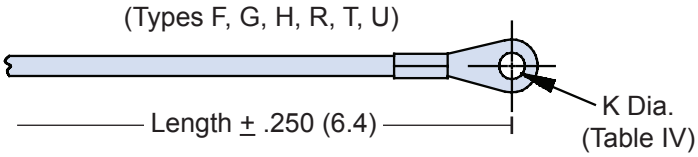

SASH CHAIN
(Type S)

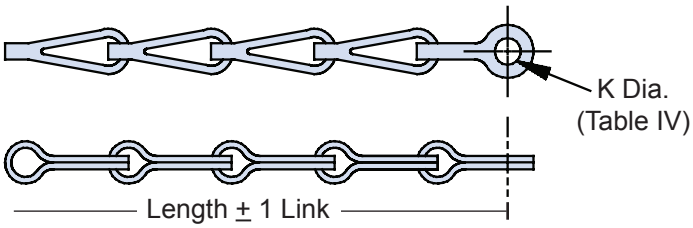

BEAD CHAIN
(Type D)

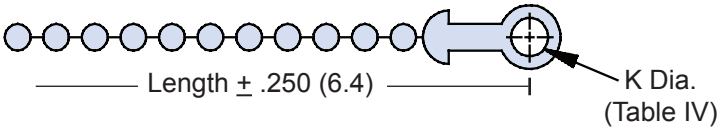

SPLIT RING - Style C

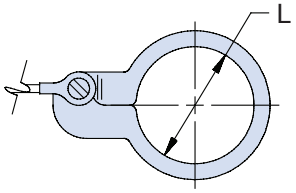

SOLID RING - Style B

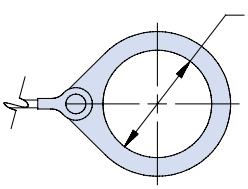

SOLID RING - Style A

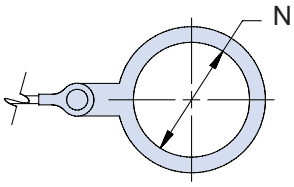

TABLE III: ATTACHMENTS

Sym	Attachment Type
D	Bead Chain, Cres, Passivate
F	Wire Rope, Nylon Jacket
G	Nylon Rope
H	Wire Rope, Fluoropolymer Jacket
N	No Attachment
R	Wire Rope, PVC Jacket
S	#8 Sash Chain, Cres, Passivate
T	Wire Rope, No Jacket
U	Wire Rope, Polyurethane Jacket with Terminal

TABLE IV: EYELET

Dash No.	K Dia ±.010 (0.3)
01	.140 (3.6)
02	.182 (4.6)
03	.191 (4.9)
04	.197 (5.0)
05	.167 (4.2)
06	.125 (3.2)
07	.218 (5.5)
09	.156 (4.0)
00	No Eyelet

TABLE V: STYLE C RING DIA.

Dash No.	N Dia ±.015 (0.4)	Dash No.	N Dia ±.015 (0.4)
50	.425 (10.8)	74	1.625 (41.3)
52	.485 (12.3)	76	1.750 (44.5)
54	.640 (16.3)	78	1.875 (47.6)
56	.750 (19.1)	80	1.980 (50.3)
58	.890 (22.6)	82	2.060 (52.3)
60	1.015 (25.8)	84	2.235 (56.8)
62	1.095 (27.8)	86	2.310 (58.7)
64	1.130 (28.7)	88	2.475 (62.9)
66	1.250 (31.8)	90	2.655 (67.4)
68	1.350 (34.3)	92	2.810 (71.4)
70	1.390 (35.3)	94	3.045 (77.3)
72	1.485 (37.7)		

TABLE VI: STYLE B RING DIA.

Dash No.	N Dia ±.015 (0.4)	Dash No.	N Dia ±.015 (0.4)
08	.468 (11.9)	24	1.484 (37.7)
10	.593 (15.1)	25	1.577 (40.1)
12	.718 (18.2)	27	1.640 (41.7)
13	.765 (19.4)	28	1.687 (42.8)
14	.844 (21.4)	29	1.765 (44.8)
15	.890 (22.6)	30	1.890 (48.0)
16	.968 (24.6)	31	1.953 (49.6)
17	1.015 (25.8)	32	1.968 (50.0)
18	1.093 (27.8)	33	2.077 (52.8)
19	1.140 (29.0)	35	2.140 (54.4)
20	1.203 (30.6)	36	2.187 (55.5)
21	1.265 (32.1)	40	2.406 (61.1)
22	1.343 (34.1)	44	2.656 (67.5)
23	1.453 (36.9)	48	3.031 (77.0)
		118	.310 (7.9)

TABLE VII: STYLE A RING DIA.

Dash No.	N Dia ±.015 (0.4)	Dash No.	N Dia ±.015 (0.4)
095	.312 (7.9)	109	1.266 (32.2)
100	.391 (9.9)	209	1.312 (33.3)
101	.516 (13.1)	110	1.438 (36.5)
102	.583 (14.8)	210	1.438 (36.5)
103	.641 (16.3)	111	1.521 (38.6)
104	.708 (18.0)	211	1.536 (39.0)
105	.766 (19.5)	112	1.641 (41.7)
205	.788 (20.0)	113	1.766 (44.9)
106	.896 (22.2)	213	1.812 (46.0)
206	.907 (23.0)	114	1.891 (48.0)
107	1.016 (25.8)	214	1.938 (49.2)
207	1.025 (26.0)	115	2.078 (52.8)
108	1.141 (29.0)	116	2.406 (61.1)
308	1.188 (30.2)	117	2.510 (63.8)
208	1.203 (30.6)		

© 2010 Glenair, Inc. CAGE CODE 06324 Rev. 090117 Printed in U.S.A.

TG70
Connector Strap Wrench
With 3/8" Square Drive

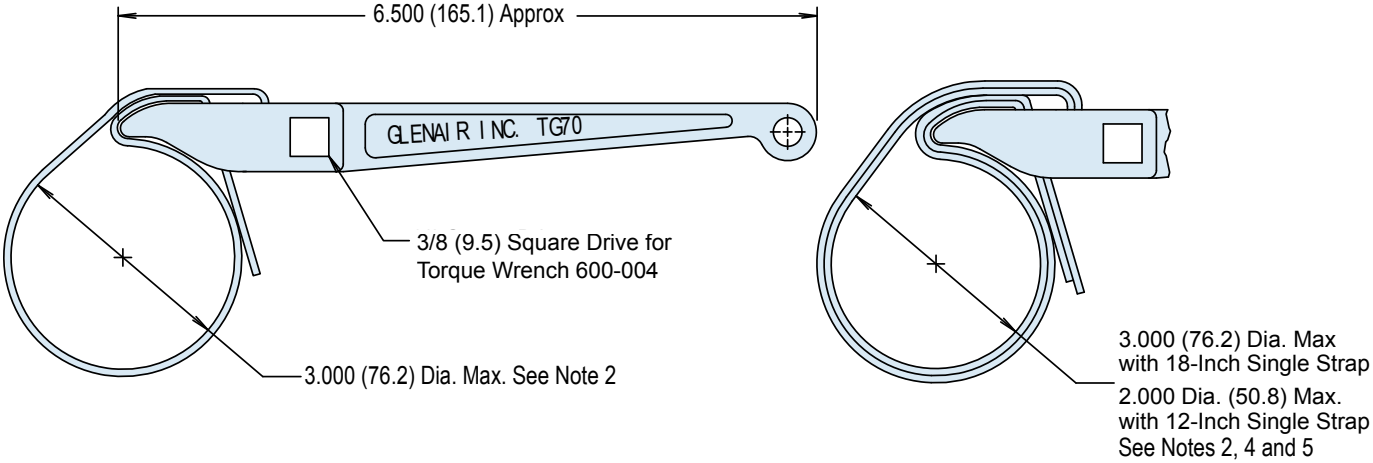

Basic Part Number	Torque Wrench (Omit for None)	
TG70	1	18

Strap Length in Inches (See Notes2 and 4)
Lengths Available: 12, 18, 24 and 36-Inch Only
Standard length is 12 Inches,
Omit Dash Number for Standard

APPLICATION NOTES

1. These wrenches are made of the following materials:
   Wrench Handle - Aluminum Alloy/Nickel Plate.
   Wedge - Stainless Steel/Passivated.
   Strap - Impregnated Fabric. Straps are 1/2 inch (12.7) in width.
2. Replacement straps are available. Specify part number G70515-xx for 12, 18, 24 or 36-inch strap. 24 and 36 inch for double wrap.
3. Metric dimensions (mm) are indicated in parentheses.
4. Double wrap as shown for heavy duty range.
5. Not recommended for composite coupling nuts (use 600-091 or 600-157).

VARIANCE CHART
TG-70 Strap Wrench Used with Glenair Torque Wrenches

Accessory Shell Size	Recommended Installation Torque: Light/Medium Duty ± 5 Inch Pounds — TG70 Torque	Light/Medium Duty — Part Torque	Heavy Duty ± 5 Inch Pounds — TG70 Torque	Heavy Duty — Part Torque
08/09	28	35	45	60
10/11	28	35	70	80
12/13	30	40	75	110 [80]
14/15	30	40	75	120 [80]
16/17	30	40	75	120 [80]
18/19	30	40	75	120 [80]
20/21	75	80	95	140 [100]
22/23	75	80	120*	140
24/25	75	80	120*	140
28			135*	150
32			150*	150
36			150*	150

* TG70 Not Recommended For Values of 120 Inch Lbs. or Greater.

VARIANCE CHART NOTES

1. Recommended installation torque is approximately 80% of MIL-C-85049 accessory thread strength values.
2. Heavy duty installation torque values may be difficult to attain with the TG70 Strap Wrench; the values shown in brackets [ ] are the maximum attainable with the TG70 Strap Wrench using a single wrap.
3. Glenair recommends using 600 series torque tools whenever possible. When torque loading exceeds 75 inch pounds, or to attain the heavy duty torque values shown, a double wrap strap provides suitable friction to achieve torque values.
4. Glenair recomends that heavy duty torque values be directly read through the connector shell body with the use of 600-005 connectors holding tools.

© 2010 Glenair, Inc. CAGE CODE 06324 Printed in U.S.A.

600-058 and 600-061
The *BAND-IT*® Clamping System
Hand Banding Tools

Fast, Cost-Effective Shielding Termination

The *BAND-IT*® clamping system provides quick, easy, cost-effective and highly reliable termination of braided metallic shielding or fabric braid. Two sizes of banding tools and bands (bands are also available in standard and extended lengths) allow complete flexibility in terminating EMI shielding and protective mechanical braiding to fiber optic and electrical harnesses. Glenair's complete line of *BAND-IT*® products are in stock and ready for immediate shipment.

Hand Banding Tool 600-058

The 600-058 Hand Banding Tool weighs 1.18 lbs., and is designed for standard clamping bands 600-052 and 600-090 (see page 36) in a tension range from 100 to 180 lbs. Calibrate at 150 lbs. ± 5 lbs. for most shield terminations. Tool and band should never be lubricated.

Reference: *BAND-IT*® part number A40199.

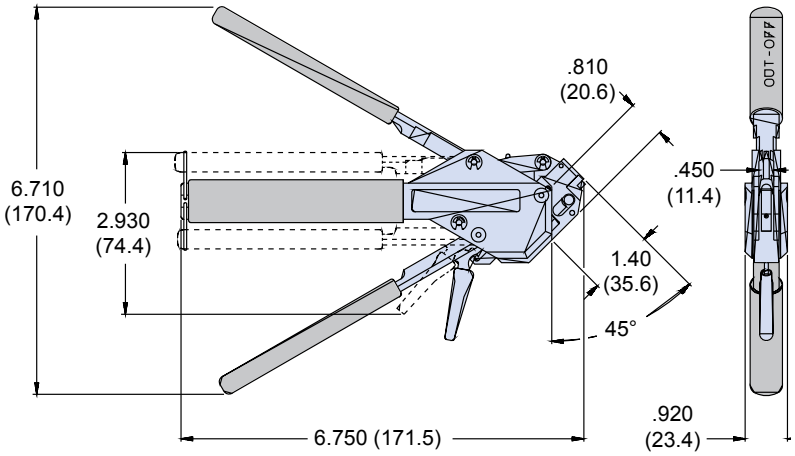

Hand Micro Banding Tool 600-061

The 600-061 Hand Micro Banding Tool weighs 1.18 lbs., and is designed for micro clamping bands 600-057 and 600-083 (see page 36) in a tension range from 50 to 85 lbs. Calibrate at 75lbs +2 lbs. -7 lbs. for most shield terminations. Tool and band should never be lubricated.

Reference: *BAND-IT*® part number A30199.

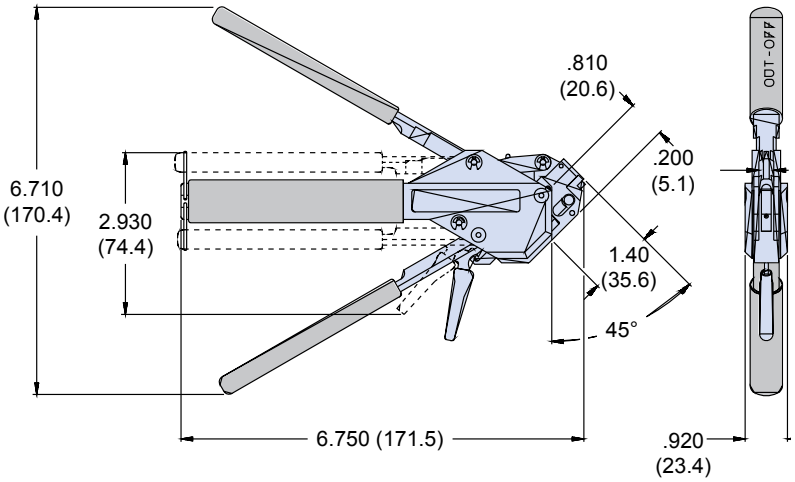

© 2010 Glenair, Inc. CAGE CODE 06324 Printed in U.S.A.

600-052, 600-057, 600-090, and 600-083 The *BAND-IT*® Clamping System

Clamping Bands

Standard Band 600-052 and Precoiled Standard Band 600-052-1

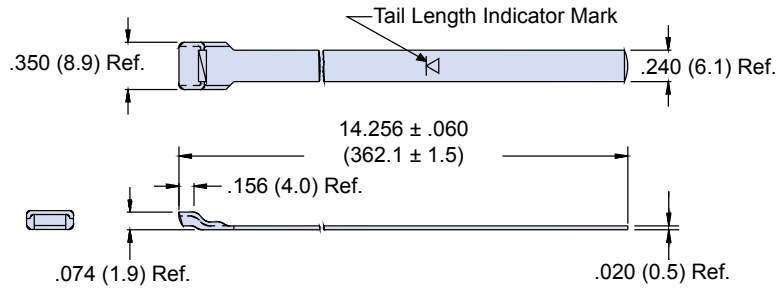

The 600-052 Standard Band is precision constructed of 300 Series SST/Passivate and designed for use with the 600-058 Hand Banding Tool or the 600-067 Pneumatic Banding Tool. Double-wrapped bands will accommodate diameters up to approximately 1.8 inches (45.7). Bands may be ordered flat (600-052) or precoiled (600-052-1). Bands come bagged and tagged in quantities from 1 to 100.

Reference: BAND-IT® Part Number A10086

Extended-Length Standard Band 600-090 and Precoiled Extended-Length Standard Band 600-090-1

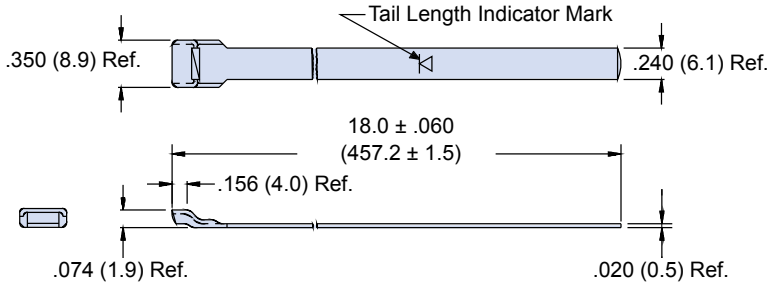

The 600-090 Extended Length Standard Band is precision constructed of 300 Series SST/Passivate, and designed for use with the 600-058 Hand Banding Tool or the 600-067 Pneumatic Banding Tool. Double-wrapped bands will accommodate diameters up to approximately 2.5 inches (63.5). Bands may be ordered flat (600-090), or precoiled (600-090-1). Bands come bagged and tagged in quantities from 1 to 100.

Reference: BAND-IT® Part Number A11086

Micro-Band 600-057 Precoiled Micro-Band 600-057-1

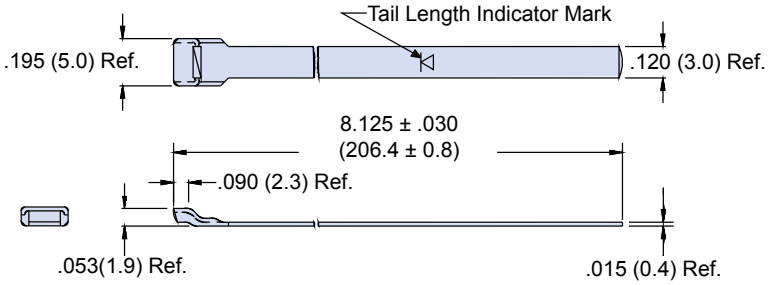

The 600-057 Micro Band is precision constructed of 300 Series SST/Passivate, and designed for use with the 600-061 Hand Banding Tool or the 600-068 Pneumatic Banding Tool. Double-wrapped bands will accommodate diameters up to approximately .88 inches (22.4). Bands may be ordered flat (600-057), or precoiled (600-057-1). Bands come bagged and tagged in quantities from 1 to 100.

Reference: BAND-IT® Part Number A31186

Extended Length Micro-Band 600-083 Precoiled Micro-Band 600-083-1

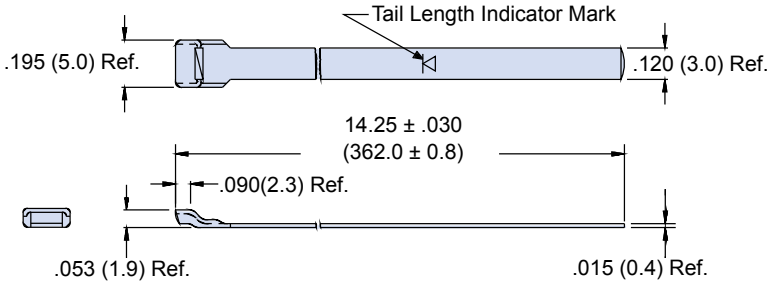

The 600-083 Extended Length Micro-Band is precision constructed of 300 Series SST/Passivate, and designed for use with the 600-061 Hand Banding Tool or the 600-068 Pneumatic Banding Tool. Double-wrapped bands will accommodate diameters up to approximately 1.88 inches (47.8). Bands may be ordered flat (600-083), or precoiled (600-083-1). Bands come bagged and tagged in quantities from 1 to 100.

Reference: BAND-IT® Part Number A31089.

Metric dimensions (mm) are indicated in parentheses. Consult factory for diameters above 2.5 inches (63.5).

© 2010 Glenair, Inc. CAGE CODE 06324 Printed in U.S.A.

The *BAND-IT*® Clamping System EMI Shield Termination Instructions

1. Prepare cable braid for termination process (Figure 1).
2. Push braid forward over adapter retention lip to the adapter incline point (or .4" [10.2mm] minimum braid length). Milk braid as required to remove slack and ensure a snug fit around the shield termination area (Figure 2).
3. Prepare the band in the following manner:

   IMPORTANT: Due to Connector/ Adapter circumference, it may be necessary to prepare the band around the cable or retention area.

   A. Roll band through the buckle slot twice (bands must be double-coiled).

   B. Pull on band until mark (⊳|) is within approximately .250 inch (6.4mm) of buckle slot (Figure 3). The band may be tightened further if desired.

   NOTE: Prepared band should have (⊳|) mark visible as shown in Figure 3.

   <u>Shield Termination Clamping Process (Figures 4 thru 8)</u>

   NOTE: To free tool handles, move holding clips to center of tool.

4. Squeeze gripper release lever and insert band into the front end opening of the tool (NOTE: Circular portion of looped band must always face downward).
5. Aligning the band and tool with the shield termination area, squeeze black pull-up handle repeatedly using short strokes until it locks against tool body. (This indicates the band is compressed to the tool precalibrated tension).

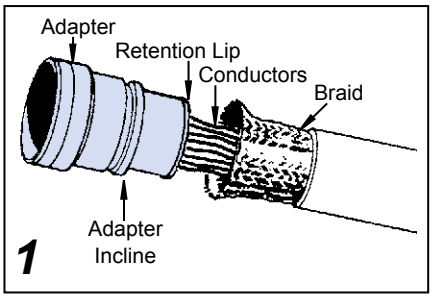

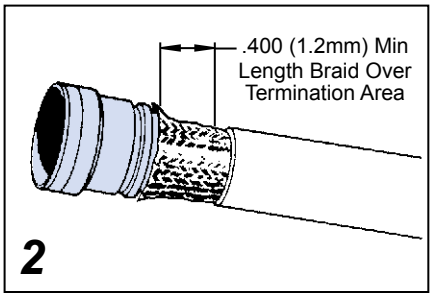

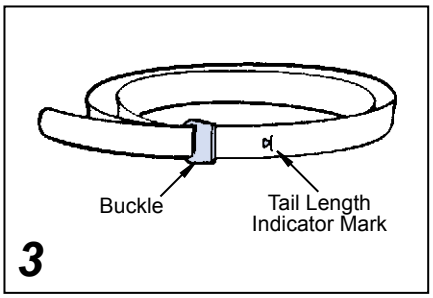

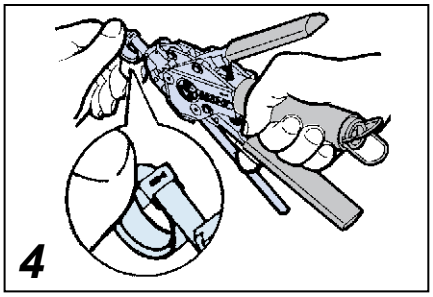

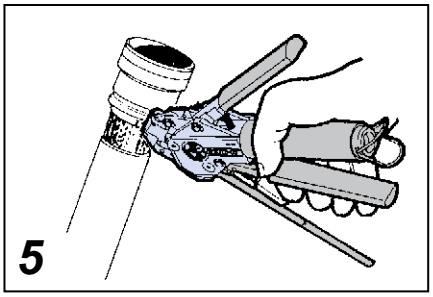

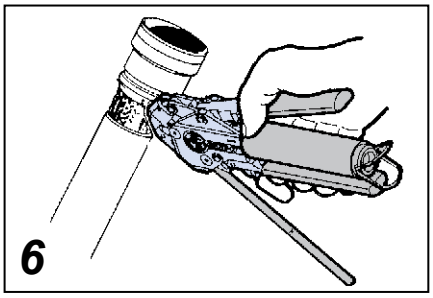

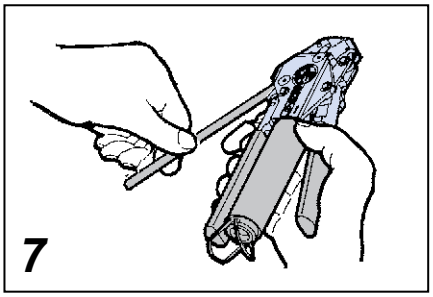

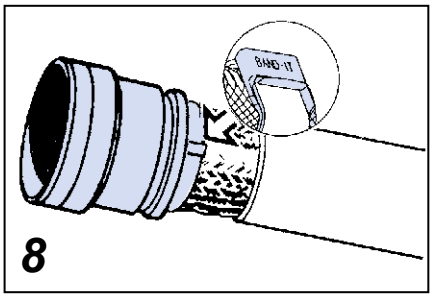

NOTE: If alignment of band and shield is unsatisfactory, tension on band can be relaxed by pushing on slotted release lever on top of tool. Make adjustments as necessary and again, squeeze black pull-up handle.

6. Complete the clamping process by squeezing the gray cut-off handle.
7. Remove excess band from tool and dispose.
8. Inspect shield termination.

© 2010 Glenair, Inc. CAGE CODE 06324 Printed in U.S.A.

600-004 and 600-007
Tools for Connector/Backshell Assembly Torque Wrenches

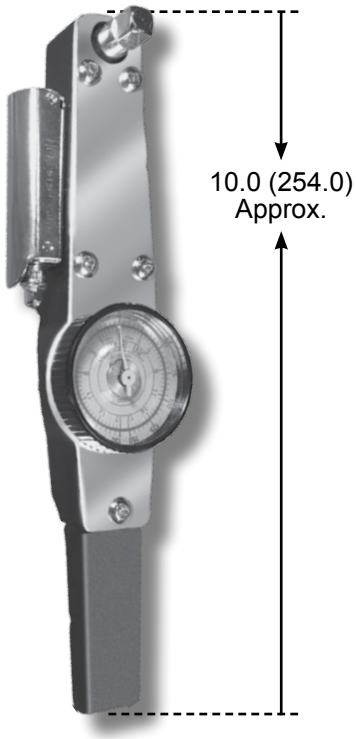

600-004

Hand-Held Torque Wrench

With Lighted Electric Signal

Adjustable to desired torque level of 0 to 150 inch pounds.

3/8" Drive

Requires two Panasonic SR44W or equivalent batteries

600-007

Bench-Mounted Torque Wrench

With Audible Electric Signal

Adjustable to desired torque level of 0 to 150 inch pounds.

3/8" Drive

Requires one Panasonic SR44W or equivalent battery

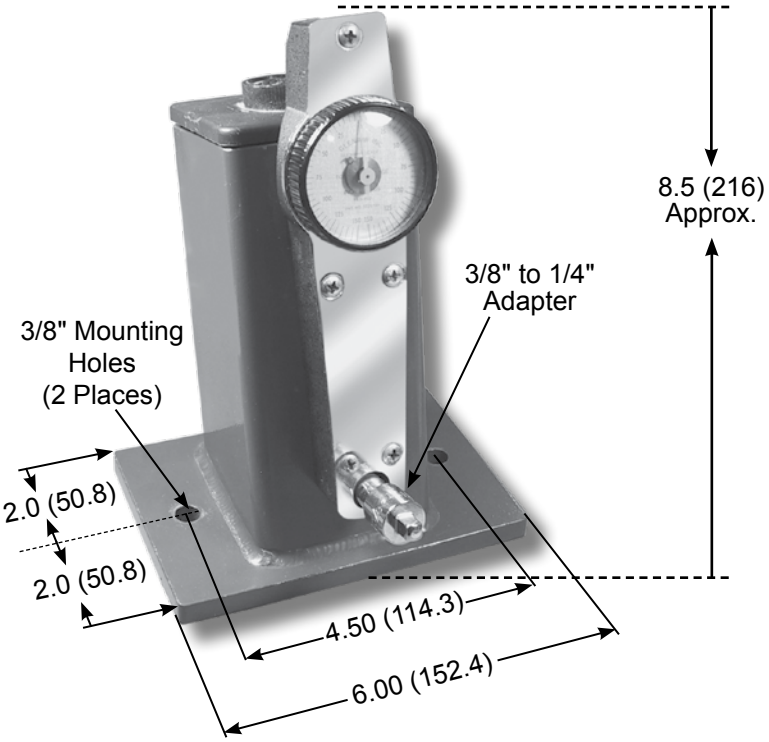

Metric Dimensions (mm) are indicated in parentheses.

© 2010 Glenair, Inc. CAGE CODE 06324 Printed in U.S.A.

GLENAIR, INC. • 1211 AIR WAY • GLENDALE, CA 91201-2497 • 818-247-6000 • FAX 818-500-9912
www.glenair.com E-Mail: sales@glenair.com

DIGITAL TORQUE WRENCH AND BENCH STAND

Torque Wrench 600-161

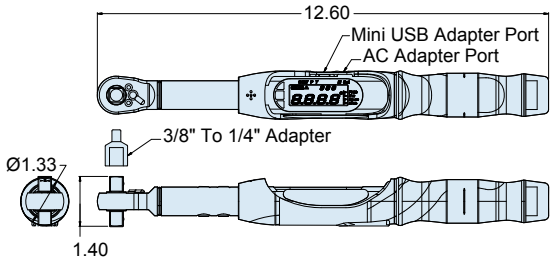

Digital Readout For Improved Accuracy

The Glenair Dual Drive Digital Torque Wrench (600-161) features a dual sided drive head for hand or bench mount use. Features an ergonomic handle with built-in digital readout display. Available torque units include: Ft-lb, Nm, Kg-Cm, or In-lb. Peak and Track modes available. Data collection via supplied USB and software provides quality departments the ability to track and record individual torque values.

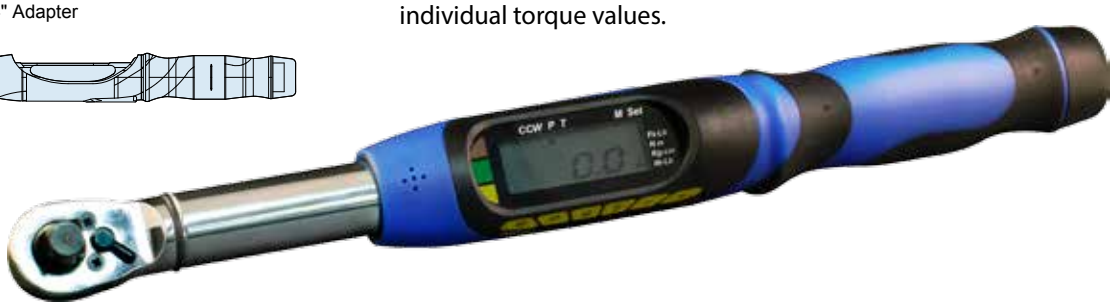

1. Use in conjunction with glenair connector and backshell tools
2. Torque range: 15-300 in/lbs; digital graduations 1/10 In/lb;
3. Accuracy: cw/ccw ±2% of reading 10% to 100% of full scale
4. replacement battery: AA x 2
5. USB cable, datatracking software, AC adapter, and 3/8" to 1/4" drive adapter included
6. weight: 1.45 Lb, w/case 2.28 Lb

Bench Stand 600-162

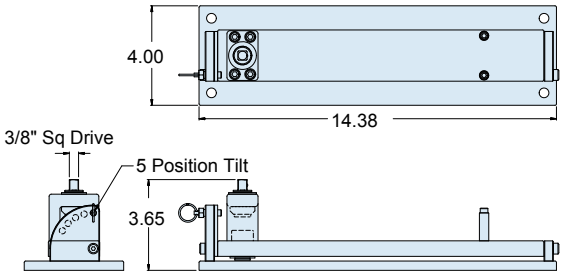

Horizontal Bench Stand

Constructed from aluminum the bench mount (600-162) features five position tilt settings.

1. Use in conjunction with glenair 600-161 digital torque wrench
2. Material: aluminum, steel, bronze weight: 4.62 Lb

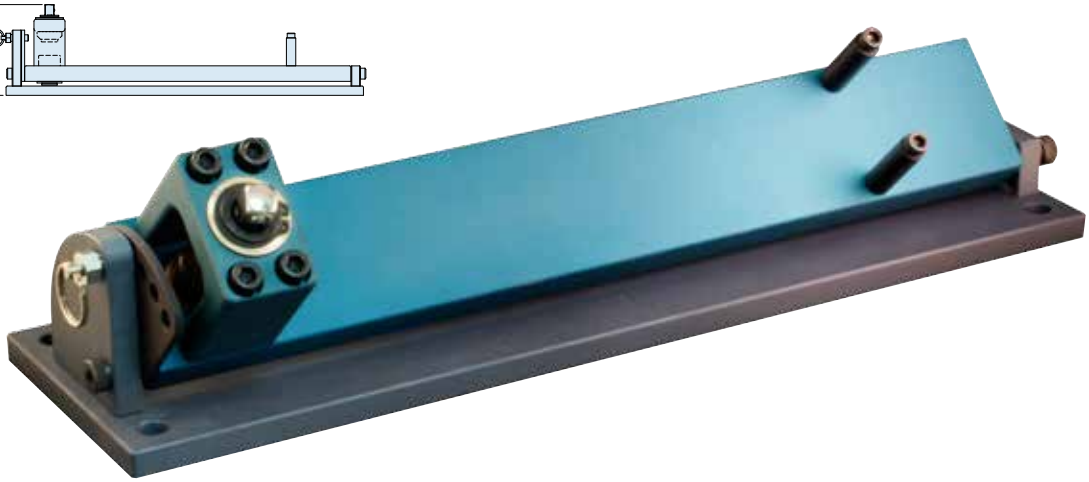

© 2010 Glenair, Inc.

GLENAIR, INC. • 1211 AIR WAY • GLENDALE, CA 91201-2497 • 818-247-6000 • FAX 818-500-9912
www.glenair.com
E-Mail: sales@glenair.com

600F005
Connector Holding Tool
MIL-DTL-38999 Series I
Plug and Receptacle

Product Series	Basic Number		Shell Size	
600	F	005	- 17	P

D38999 Series I Holding Tool Connector Code

Contact Style
P - Plug Holder
R - Receptacle Holder

NO POLARIZATION REQUIRED

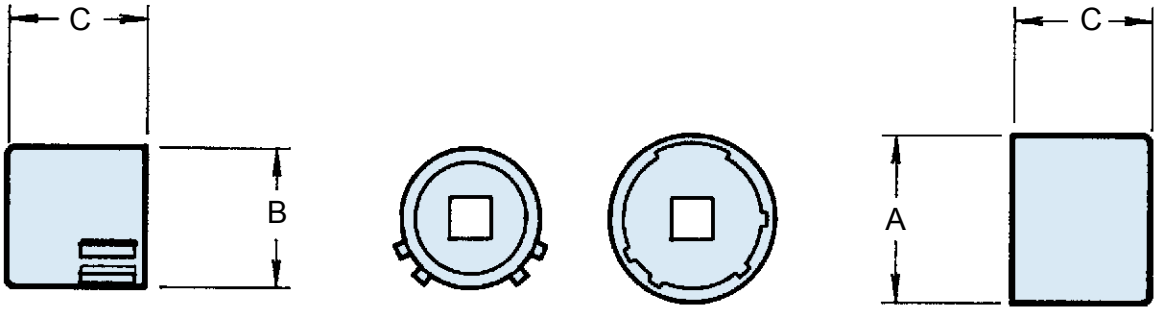

Receptacle Holder

Plug Holder

Shell Size	Max. Recommended Torque (Inch Pounds)	A Dia. Max.	B Dia. Max.	C Dim. Max.
09	40	.577 (14.7)	.438 (11.1)	1.031 (26.2)
11	40	.709 (18.0)	.566 (14.4)	1.031 (26.2)
13	40	.829 (21.1)	.678 (17.2)	1.031 (26.2)
15	40	.954 (24.2)	.803 (20.4)	1.031 (26.2)
17	40	1.107 (28.1)	.928 (23.6)	1.031 (26.2)
19	40	1.190 (30.2)	1.033 (26.2)	1.031 (26.2)
21	80	1.315 (33.4)	1.158 (29.4)	1.031 (26.2)
23	80	1.440 (36.6)	1.283 (32.6)	1.031 (26.2)
25	80	1.565 (39.8)	1.408 (35.8)	1.031 (26.2)

NOTES
1. Metric dimensions (mm) are indicated in parentheses.
2. Material: Case hardened carbon steel with electroless nickel finish.
3. Receptacle and plug holder drives: 1/4" - Shell sizes 09, 11 and 13; 3/8" - Shell sizes 15 and up.

© 2010 Glenair, Inc. CAGE CODE 06324 Printed in U.S.A.

600FF005
Connector Holding Tool
MIL-DTL-38999 Series II
Plug and Receptacle

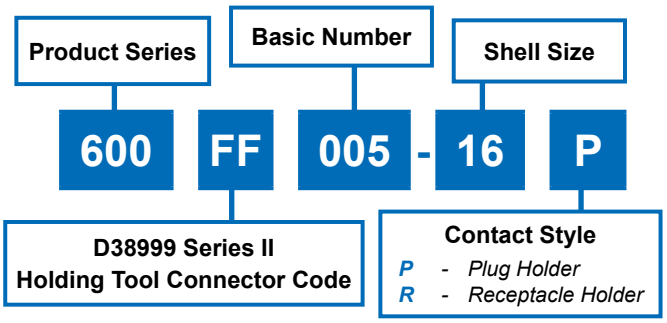

NO POLARIZATION REQUIRED

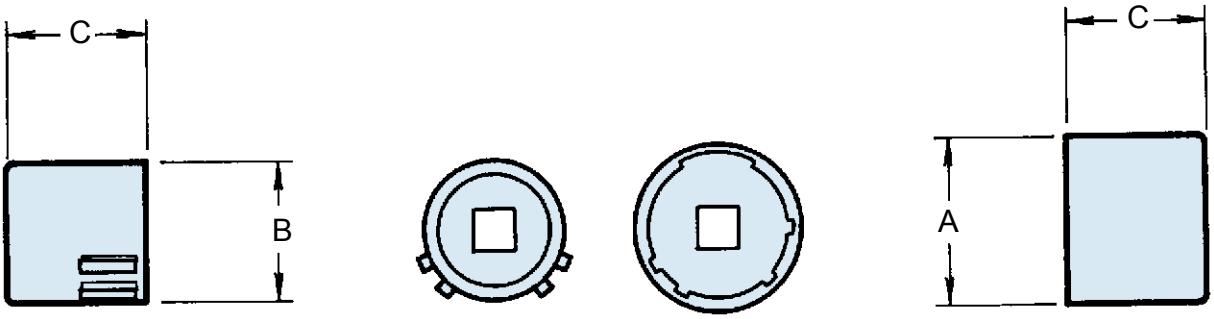

Receptacle Holder

Plug Holder

Shell Size	Max. Recommended Torque (Inch Pounds)	A Dia. Max.	B Dia. Max.	C Dim. Max.
08	40	.478 (12.1)	.358 (9.1)	.910 (23.1)
10	40	.599 (15.2)	.486 (12.3)	.910 (23.1)
12	40	.758 (19.3)	.603 (15.3)	.910 (23.1)
14	40	.882 (22.4)	.728 (18.5)	.910 (23.1)
16	40	1.007 (25.6)	.853 (21.7)	.910 (23.1)
18	40	1.133 (28.8)	.958 (24.3)	.910 (23.1)
20	80	1.257 (31.9)	1.083 (27.5)	.910 (23.1)
22	80	1.382 (35.1)	1.208 (30.7)	.910 (23.1)
24	80	1.507 (38.3)	1.333 (33.9)	.910 (23.1)

NOTES
1. Also mates with 40M38277.
2. Metric dimensions (mm) are indicated in parentheses.
3. Material: Case hardened carbon steel with electroless nickel finish.
4. Receptacle and plug holder drives: 1/4" - Shell sizes 08, 10 and 12; 3/8" - Shell sizes 14 and up.

© 2010 Glenair, Inc. CAGE CODE 06324 Printed in U.S.A.

600H005
Connector Holding Tool
MIL-DTL-38999 Series III
Plug and Receptacle

Product Series — 600
D38999 Series III Holding Tool Connector Code — H
Basic Number — 005
Shell Size — 17
Contact Style
P - Plug Holder
R - Receptacle Holder — P
Polarization
A, B, C, D or E
(N = Normal) — N

600 H 005 - 17 P N

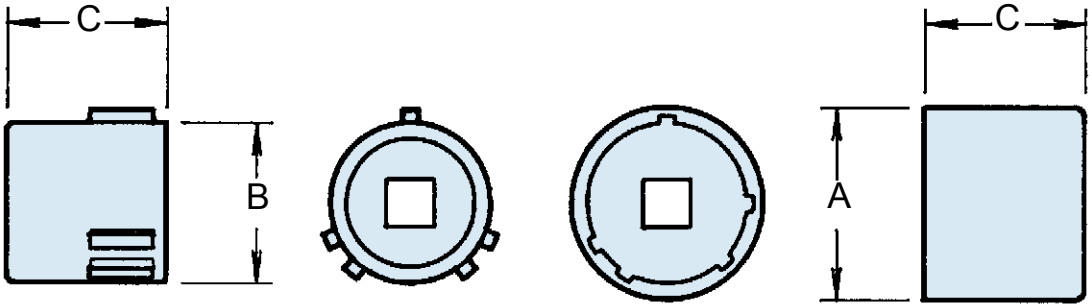

Receptacle Holder Plug Holder

Shell Size Com'l	Shell Size Mil. Ref.	Recommended Torque (+/- 5 Inch-Pounds) Metal	Recommended Torque (+/- 5 Inch-Pounds) Composite	A Dia. Max.	B Dia. Max.	C Dim. Max.
09	A	60	35	.577 (14.7)	.438 (11.1)	1.031 (26.2)
11	B	80	35	.709 (18.0)	.566 (14.4)	1.031 (26.2)
13	C	110	40	.829 (21.1)	.678 (17.2)	1.031 (26.2)
15	D	120	40	.954 (24.2)	.803 (20.4)	1.031 (26.2)
17	E	120	40	1.107 (28.1)	.928 (23.6)	1.031 (26.2)
19	F	120	40	1.190 (30.2)	1.033 (26.2)	1.031 (26.2)
21	G	140	80	1.315 (33.4)	1.158 (29.4)	1.031 (26.2)
23	H	140	80	1.440 (36.6)	1.283 (32.6)	1.031 (26.2)
25	J	140	80	1.565 (39.8)	1.408 (35.8)	1.031 (26.2)

NOTES
1. Metric dimensions (mm) are indicated in parentheses.
2. Material: Case hardened carbon steel with electroless nickel finish.
3. Receptacle and plug holder drives: 1/4" - Shell sizes 09, 11 and 13; 3/8" - Shell sizes 15 and up.
4. Composite values apply when using Glenair 600-091 and 600-007 tools.

© 2010 Glenair, Inc. CAGE CODE 06324 Printed in U.S.A.

600HH005
Connector Holding Tool
MIL-DTL-38999 Series IV
Plug and Receptacle

Product Series	Basic Number		Shell Size	
600	HH	005	- 17	P

D38999 Series IV Holding Tool Connector Code

Contact Style
- *P - Plug Holder*
- *R - Receptacle Holder*

NO POLARIZATION REQUIRED

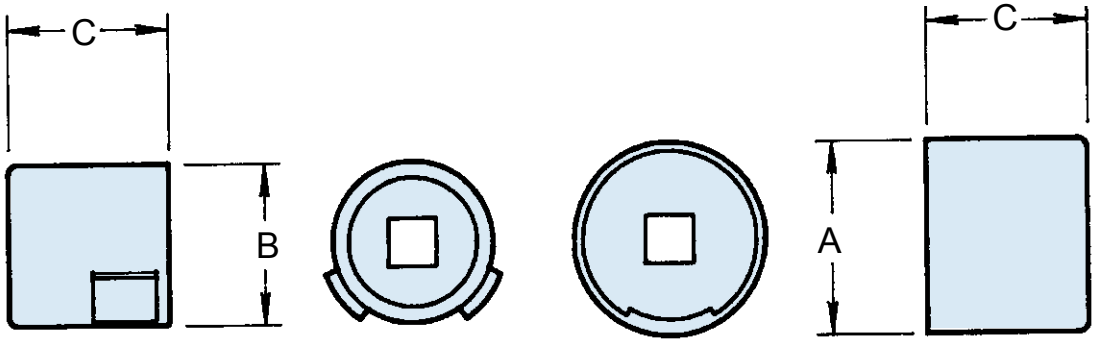

Plug Holder

Receptacle Holder

Shell Size Com'l	Shell Size Mil. Ref.	Max. Recommended Torque (Inch Pounds)	A Dia. Max.	B Dia. Max.	C Dim. Max.
11	B	80	.83 (21.1)	.515 (13.1)	1.28 (32.5)
13	C	110	.95 (24.1)	.650 (16.5)	1.28 (32.5)
15	D	120	1.07 (27.2)	.775 (19.7)	1.28 (32.5)
17	E	120	1.20 (30.5)	.901 (22.9)	1.28 (32.5)
19	F	120	1.28 (32.5)	1.015 (25.8)	1.28 (32.5)
21	G	140	1.40 (35.6)	1.140 (29.0)	1.28 (32.5)
23	H	140	1.53 (38.9)	1.265 (32.1)	1.28 (32.5)
25	J	140	1.66 (42.2)	1.392 (35.4)	1.28 (32.5)

NOTES
1. Metric dimensions (mm) are indicated in parentheses.
2. Material: Case hardened carbon steel with electroless nickel finish.
3. Receptacle and plug holder drives: 1/4" - Shell sizes 11 and 13; 3/8" - Shell sizes 15 and up.

© 2010 Glenair, Inc. CAGE CODE 06324 Printed in U.S.A.

TG60
Universal Connector Holding Wrench
MIL-DTL-38999 Series I

Basic Part No.

TG60 - 15

Shell Size

NOTES
1. Metric dimensions (mm) are indicated in parentheses.
2. Material: Aluminum alloy with electroless nickel finish.

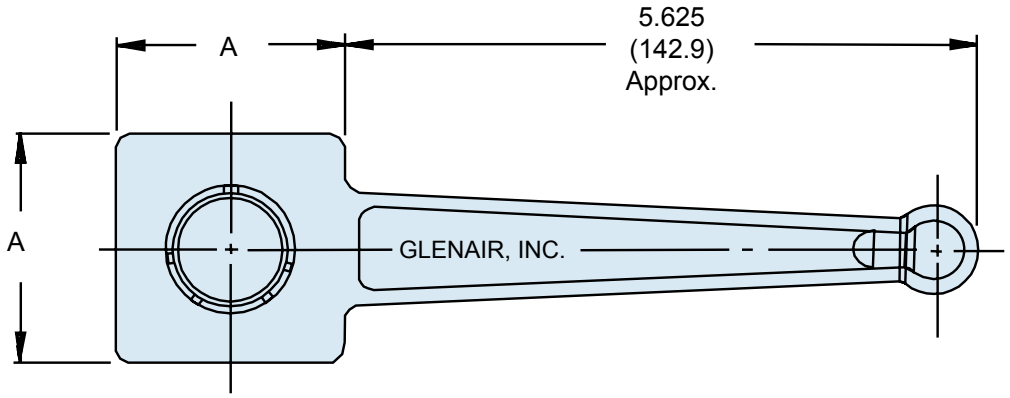

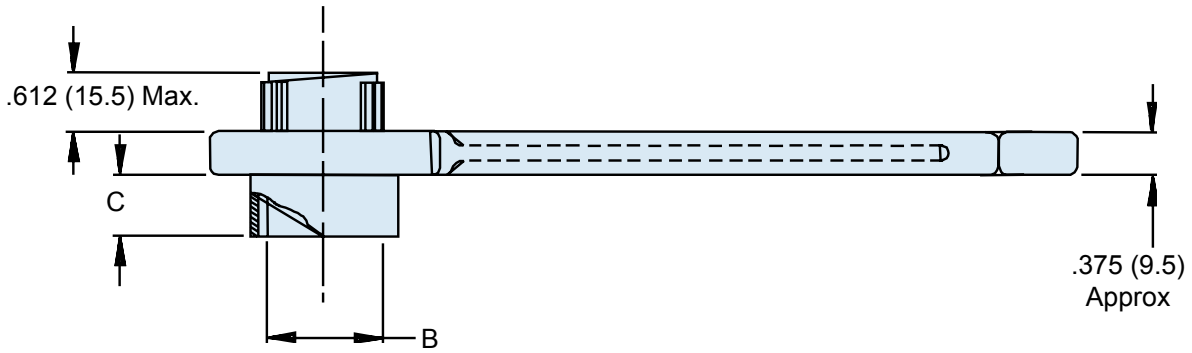

Shell Size	A Dim. Ref.	B Dia. Ref.	C Max
9	1.250 (31.8)	.442 (11.2)	.647 (16.4)
11	1.250 (31.8)	.570 (14.5)	.647 (16.4)
13	1.250 (31.8)	.687 (17.4)	.647 (16.4)
15	2.000 (50.8)	.812 (20.6)	.647 (16.4)
17	2.000 (50.8)	.937 (23.8)	.647 (16.4)
19	2.000 (50.8)	1.042 (26.5)	.647 (16.4)
21	2.000 (50.8)	1.167 (29.6)	.617 (15.7)
23	2.000 (50.8)	1.292 (32.8)	.617 (15.7)
25	2.000 (50.8)	1.417 (36.0)	.617 (15.7)

© 2010 Glenair, Inc. CAGE CODE 06324 Printed in U.S.A.

TG48
Universal Connector Holding Wrench
MIL-DTL-38999 Series II

Basic Part No.

TG48 - 20

Shell Size

NOTES
1. Metric dimensions (mm) are indicated in parentheses.
2. Material: Aluminum alloy with electroless nickel finish.

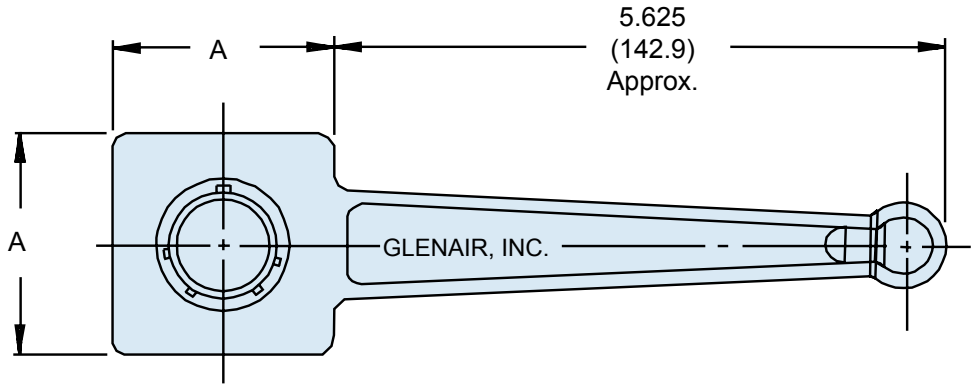

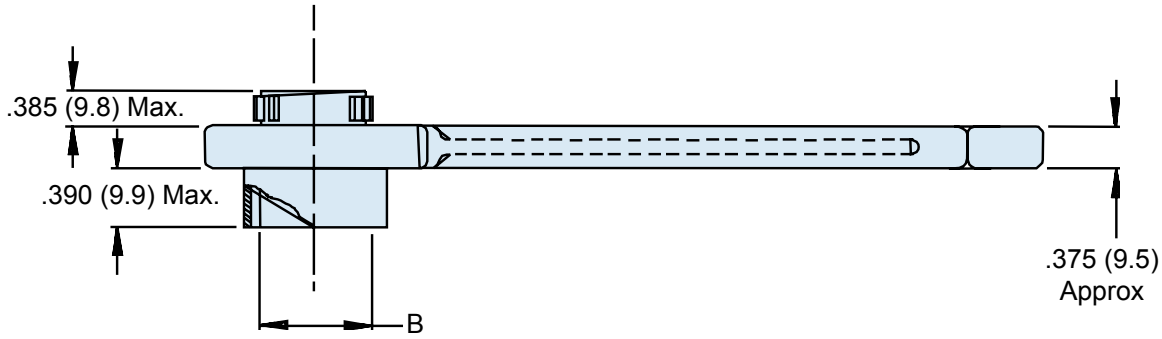

Shell Size	A Dim. ± .062 (1.6)	B Dia. Ref.
8	1.250 (31.8)	.362 (9.2)
10	1.250 (31.8)	.490 (12.4)
12	1.250 (31.8)	.607 (15.4)
14	1.250 (31.8)	.732 (18.6)
16	2.000 (50.8)	.857 (21.8)
18	2.000 (50.8)	.962 (24.4)
20	2.000 (50.8)	1.087 (27.6)
22	2.000 (50.8)	1.212 (30.8)
24	2.000 (50.8)	1.337 (34.0)

© 2010 Glenair, Inc. CAGE CODE 06324 Printed in U.S.A.

TG90
Universal Connector Holding Wrench
MIL-DTL-38999 Series III

Product Series	Shell Size	Polarization
TG90	21	A

Polarization: *A, B, C, D or E* (*Omit for Normal*)

NOTES
1. Metric dimensions (mm) are indicated in parentheses.
2. Material: Aluminum alloy with electroless nickel finish.

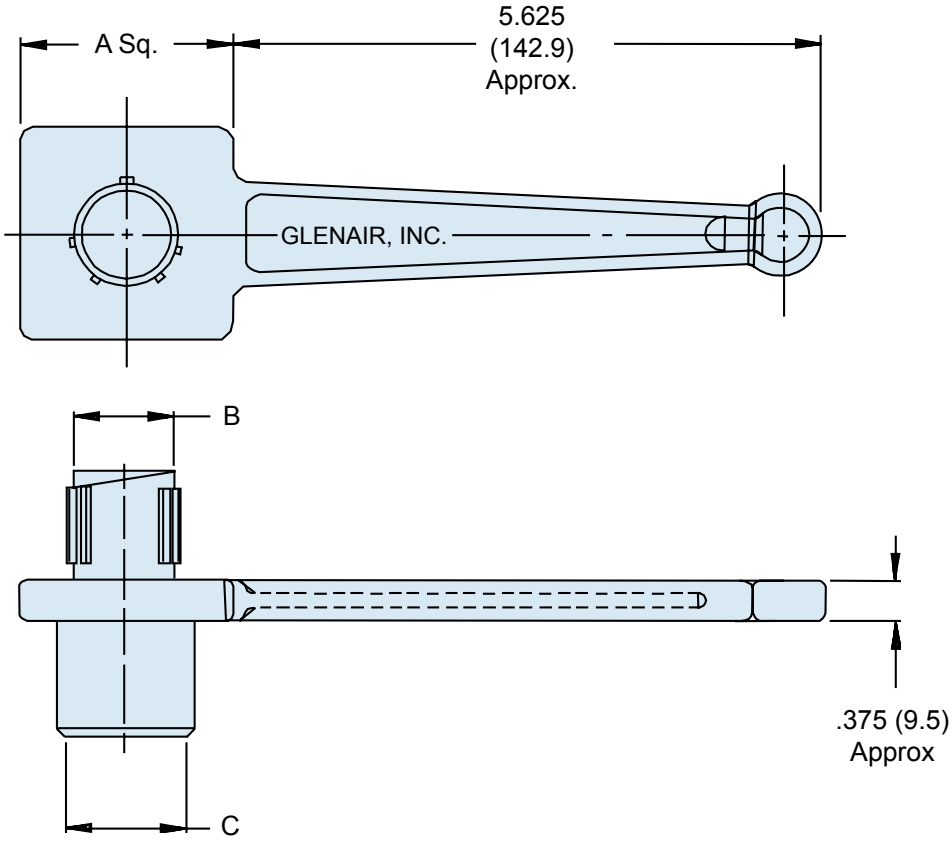

Shell Size	A Dim. ± .062 (1.6)	B Dia. Ref.	C Dia. Ref.
09	1.250 (31.8)	.438 (11.1)	.441 (11.2)
11	1.250 (31.8)	.566 (14.4)	.569 (14.5)
13	1.250 (31.8)	.678 (17.2)	.682 (17.3)
15	2.000 (50.8)	.802 (20.4)	.811 (20.6)
17	2.000 (50.8)	.928 (23.6)	.931 (23.6)
19	2.000 (50.8)	1.032 (26.2)	1.037 (26.3)
21	2.000 (50.8)	1.155 (29.3)	1.162 (29.5)
23	2.750 (69.9)	1.283 (32.6)	1.288 (32.7)
25	2.750 (69.9)	1.407 (35.7)	1.411 (35.8)

© 2010 Glenair, Inc. CAGE CODE 06324 Printed in U.S.A.

600-091
Composite-Hex-Coupling Wrench

ALUMINUM TOOL FOR USE WITH GLENAIR COMPOSITE BACKSHELLS

600 - 091 - 16

- **600** — Product Series
- **091** — Basic Number
- **16** — Dash Number (*Table I*) for Individual Sizes

For Kit:

KC *- Dash Numbers 08 through 28*
KLC *- Dash Numbers 32 through 44*
KIT *- Dash Numbers 08 through 44*

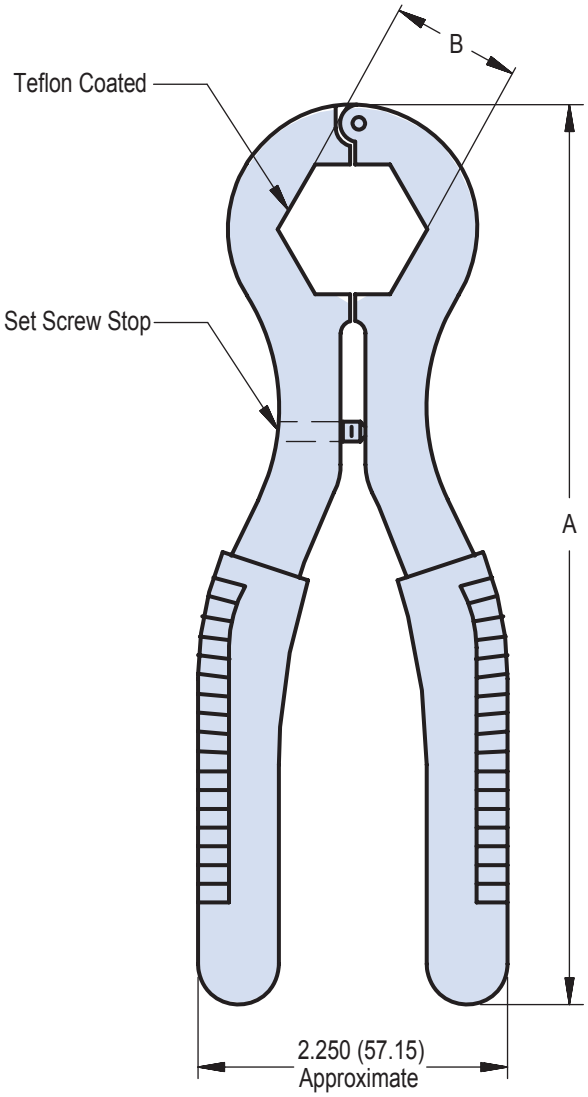

TABLE I: DASH NUMBER AND DIMENSIONS

Dash No.	A Ref.		B +/-.005 (.13) Hex*		Shell Size Ref.	Composite Torque Inch Pounds
08	7.38	(187.5)	.750	(19.1)	08/09	35
10	7.50	(190.5)	.875	(22.2)	10/11	35
12	7.50	(190.5)	1.000	(25.4)	12/13	45
14	7.50	(190.5)	1.125	(28.6)	14/15	45
16	7.50	(190.5)	1.250	(31.8)	16/17	45
18	7.75	(196.9)	1.375	(34.9)	18/19	45
20	8.00	(203.2)	1.500	(38.1)	20/21	80
22	8.25	(209.6)	1.625	(41.3)	22/23	80
24	8.25	(209.6)	1.750	(44.5)	24/25	80
28	8.50	(215.9)	2.000	(50.8)	28	120
32	10.00	(254.0)	2.250	(57.2)	32	120
36	10.00	(254.0)	2.500	(63.5)	36	120
44	10.00	(254.0)	3.000	(76.2)	44	N/A

APPLICATION NOTES

1. This backshell assembly tool is designed for Glenair composite hex coupling applications and should be used in conjunction with Glenair torque wrenches (see page 14).
2. These wrenches are made of aluminum alloy with vinyl grips.
3. B Hex is critical, adjust set screw until dimension is within tolerance (+/- .005)
4. Metric dimensions (mm) are indicated in parentheses.

© 2010 Glenair, Inc. CAGE CODE 06324 Printed in U.S.A.

GLENAIR, INC. • 1211 AIR WAY • GLENDALE, CA 91201-2497 • 818-247-6000 • FAX 818-500-9912
www.glenair.com E-Mail: sales@glenair.com

600-157
Composite-Hex-Coupling Wrench

STAINLESS STEEL TOOL FOR USE WITH GLENAIR COMPOSITE BACKSHELLS

600 - 157 - K

- **600** — Product Series
- **157** — Basic Number
- **K** — Dash Number

Dash Number for Individual Wrench or:

K - All Wrench Sizes 08 through 24, No Case

KC - All Wrench Sizes 08 through 24 with Case

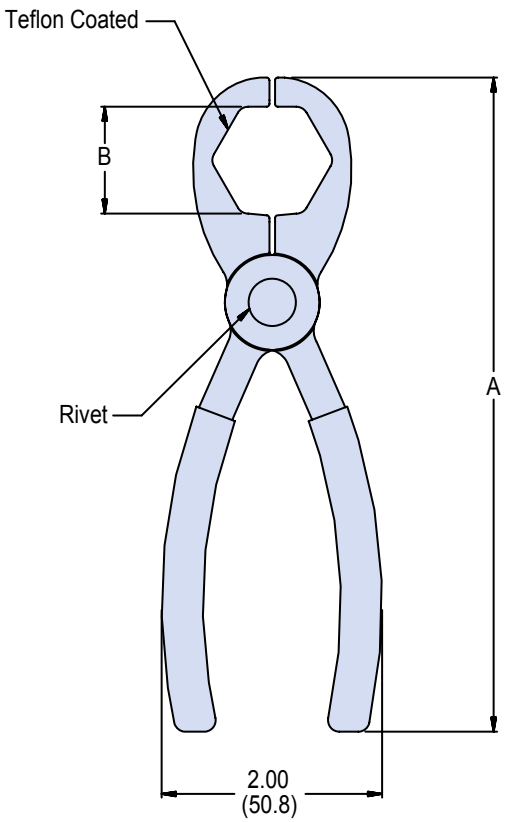

TABLE I: DASH NUMBER

Dash Number	A Ref	B Hex ±.005 (0.1)	Connector for Shell Size	
			Codes A & F	Code H
08	6.700 (170.2)	.750 (19.1)	08	09
10	6.750 (171.5)	.875 (22.2)	10	11
12	6.810 (173.0)	1.000 (25.4)	12	13
14	6.880 (174.8)	1.125 (28.6)	14	15
16	6.950 (176.5)	1.250 (31.8)	16	17
18	7.050 (179.1)	1.375 (34.9)	18	19
20	7.150 (181.6)	1.500 (38.1)	20	21
22	7.380 (187.5)	1.625 (41.3)	22	23
24	7.440 (189.0)	1.750 (44.5)	24	25

APPLICATION NOTES

1. This backshell assembly tool is designed for Glenair composite hex coupling applications and should be used in conjunction with Glenair torque wrenches (see page 14).
2. These wrenches are made of stainless steel with vinyl grips.
3. Metric dimensions (mm) are indicated in parentheses.

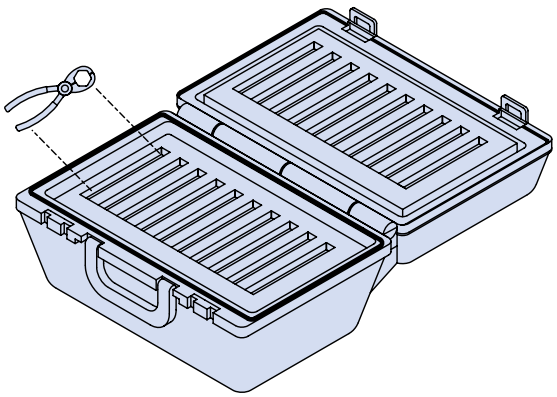

© 2010 Glenair, Inc. CAGE CODE 06324 Printed in U.S.A.

The world's broadest selection of interconnect products–in stock and ready for immediate same-day shipment

Available now: Glenair's Interconnect Product Guide CD, featuring our entire library of Glenair catalogs and data sheets.

In addition to over a dozen product line catalogs, the CD includes a powerful part number development program that takes all the pain and confusion out of ordering interconnect components. An easy-to-use inventory search program provides ready access to 60,000 MIL-STD and commercial part numbers.

Glenair's World of Interconnect Solutions

A complete overview of Glenair's innovative range of interconnect products and services, including Military Standard and commercial equivalent connectors and accessories.

Micro-D Twistpin Connectors and Accessories

Glenair offers both Military Standard 83513 Micro-D connectors as well as COTS selections, backshells, mounting hardware and more. Our TwistPin contact provides superior performance.

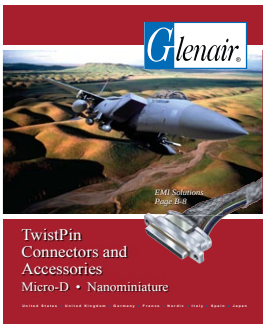

Composite Thermoplastic Interconnect Solutions

Glenair is the world's leading manufacturer of composite interconnect solutions. We are the 'go-to' supplier for advanced composite technologies for commerical and military interconnect applications.

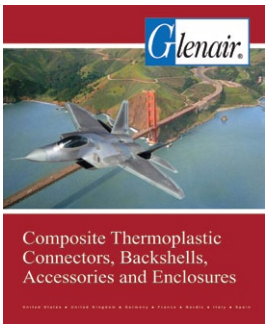

EMI/EMP Filter Connectors

MIL-DTL-38999 type EMI/EMP filter connectors, as well as other Military Standard and commercial electromagnetic shielding technologies. Also includes Glenair Series 80 "Mighty Mouse" filter products.

Miliary Standard Connector Accessories

If the MS connector accessory you need isn't in here – it doesn't exist. Search this easy-to-use catalog by accessory type or Mil-Spec slash number, then place your order against Glenair's 60,000 part number same-day inventory.

Fiber Optic Interconnect Solutions

Tactical fiber optic connectors, cables, and termini for airframe, shipboard, and military ground vehicles. Catalog features Glenair's innovative high-density (GHD) connector system for reduced size and weight applications.

Series 80 "Mighty Mouse" Connectors and Cables

Glenair's revolutionary connector series that reduces interconnect system size and weight by 50% compared to standard MIL-DTL-38999 connectors. Now used on hundreds of mission-critical military and commercial applications.

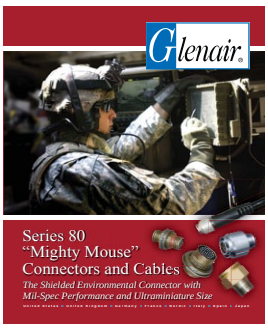

Visit us at www.glenair.com and use the literature order form for immediate catalog fulfillment

Out of This World

INTERCONNECT SOLUTIONS

Glenair, Inc.
1211 Air Way • Glendale, California • 91201-2497
Telephone: 818-247-6000 • Fax: 818-500-9912 • sales@glenair.com
www.glenair.com

Glenair Power Products Group
860 N. Main Street Extension
Wallingford, CT
06492
Telephone: 203-741-1115
Facsimile: 203-741-0053
sales@glenair.com

Glenair UK Ltd
40 Lower Oakham Way
Oakham Business Park
P.O. Box 37, Mansfield
Notts, NG18 5BY England
Telephone: +44-1623-638100
Facsimile: +44-1623-638111
sales@glenair.co.uk

Glenair Microway Systems
7000 North Lawndale Avenue
Lincolnwood, IL
60712
Telephone: 847-679-8833
Facsimile: 847-679-8849

Glenair Nordic AB
Gustav III : S Boulevard 46
S - 169 27 Solna
Sweden
Telephone: +46-8-50550000
Facsimile: +46-8-50550001
sales@glenair.se

Glenair Electric GmbH
Schaberweg 28
D. 61348 Bad Homburg
Germany
Telephone: 06172 / 68 16 0
Facsimile: 06172 / 68 16 90
germany@glenair.com

Glenair Iberica
C/ La Vega, 16
45612 Velada
Spain
Telephone: +34-925-89-29-88
Facsimile: +34-925-89-29-87
sales@glenair.es

Glenair Italia S.p.A.
Via Del Lavoro, 7
40057 Quarto Inferiore –
Granarolo dell'Emilia
Bologna, Italy
Telephone: +39-051-782811
Facsimile: +39-051-782259
info@glenair.it

Glenair France SARL
7, Avenue Parmentier
Immeuble Central Parc #2
31200 Toulouse
France
Telephone: +33-5-34-40-97-40
Facsimile: +33-5-61-47-86-10
sales@glenair.fr

© 2013 Glenair, Inc.

Printed in U.S.A.

Looking for pricing, stock, or lifecycle information?

Click below to explore more details on WIN SOURCE:

- View D38999/28-8K on WIN SOURCE
- Glenair, Inc. Information

Optimize Your Supply Chain with WIN SOURCE Solutions

- Global Sourcing Solution
- Obsolete Management
- Cost Control Management
- Shortage Management
- Alternative Solution
- Excess Inventory Management