THE DATASHEET OF

SSL-LX3044SGC

www.win-source.net 0086-755-83957316

PART NUMBER	SSL-LX3044SGC	REV.	C
DATE	E.C.N. NUMBER AND REVISION COMMENTS		REV.
11.28.94	UPDATED SPECS.		A
04.10.01	E.C.N. #10BRDR. & REDRAWN IN 3D.		B
10.23.12	E.C.N. #10BRDR. & REDRAWN.		C

16 [ø0.124]

00 [ø0.118]

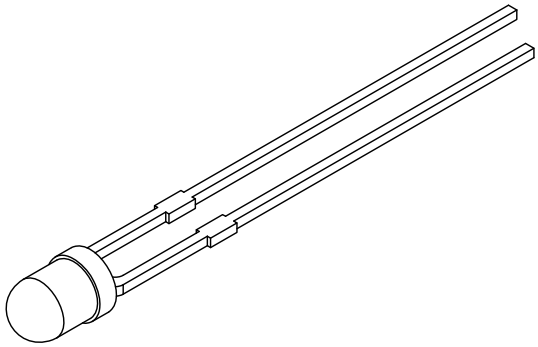

[0.028] MAX.

2.00 [0.079]

.100]

ELECTRO-OPTICAL CHARACTERISTICS Ta=25°C If=20mA

PARAMETER	MIN	TYP	MAX	UNITS	TEST COND
PEAK WAVELENGTH		565		nm	
FORWARD VOLTAGE		2.2	2.6	Vf	
REVERSE VOLTAGE	5.0			Vr	Ir=100µA
AXIAL INTENSITY		200		mcd	If=20mA
VIEWING ANGLE		30		2x theta	
EMITTED COLOR:	GREEN				
LENS FINISH:	WATER CLEAR				

LIMITS OF SAFE OPERATION AT 25°C

PARAMETER	MAX	UNITS
PEAK FORWARD CURRENT*	150	mA
STEADY CURRENT	25	mA
POWER DISSIPATION	105	mW
DERATE FROM 25°C	-1.6	mW/°C
OPERATING TEMP.	-40 TO +85	°C
STORAGE TEMP.	-40 TO +85	°C
SOLDERING TEMP.	+260	°C
2.0mm FROM BODY	3	SEC.

* t<10µS

X=±1 (±0.039), X.X=±0.5 (±0.020), X.XX=±0.25 (±0.010), X.XXX=±0.127 (±0.005). LEAD SIZE=±0.05 (±0.002), LEAD LENGTH=±0.75 (±0.030). MIN= +DECIMAL PRECISION -0.00 MAX.= +0.00 -DECIMAL PRECISION

UNCONTROLLED DOCUMENT

RY AVE.
EAM, IL 60188-4900
800.278.5666
0.315.2152
LUMEX.COM
ITW PHOTONICS GROUP

T-3mm (T-1) 565nm GREEN LED, WATER CLEAR LENS.

THE SPECIFICATIONS MAY CHANGE AT ANY TIME WITHOUT NOTICE DUE TO NEW MATERIALS OR PRODUCT IMPROVEMENT.

CONFIDENTIAL INFORMATION
THE INFORMATION CONTAINED IN THIS DOCUMENT IS THE PROPERTY OF LUMEX INC. EXCEPT AS SPECIFICALLY AUTHORIZED IN WRITING BY LUMEX INC., THE HOLDER OF THIS DOCUMENT SHALL KEEP ALL INFORMATION CONTAINED HEREIN CONFIDENTIAL AND SHALL PROTECT SAME IN WHOLE OR IN PART FROM DISCLOSURE AND DISSEMINATION TO ALL THIRD PARTIES.

DATE:	10.23.12	DRAWN BY:	AB
PAGE:	1 OF 1	CHKD BY:	KF
SCALE:	NTS	APRVD BY:	KF
UNIT:	mm [INCH]		

Looking for pricing, stock, or lifecycle information?

Click below to explore more details on WIN SOURCE:

- View SSL-LX3044SGC on WIN SOURCE
- Lumex Opto/Components Inc. Information

Optimize Your Supply Chain with WIN SOURCE Solutions

- Global Sourcing Solution
- Obsolete Management
- Cost Control Management
- Shortage Management
- Alternative Solution
- Excess Inventory Management