THE DATASHEET OF

TC223S16F133FACKXUMA1

www.win-source.net 0086-755-83957316

Power and sensing

Selection guide 2021

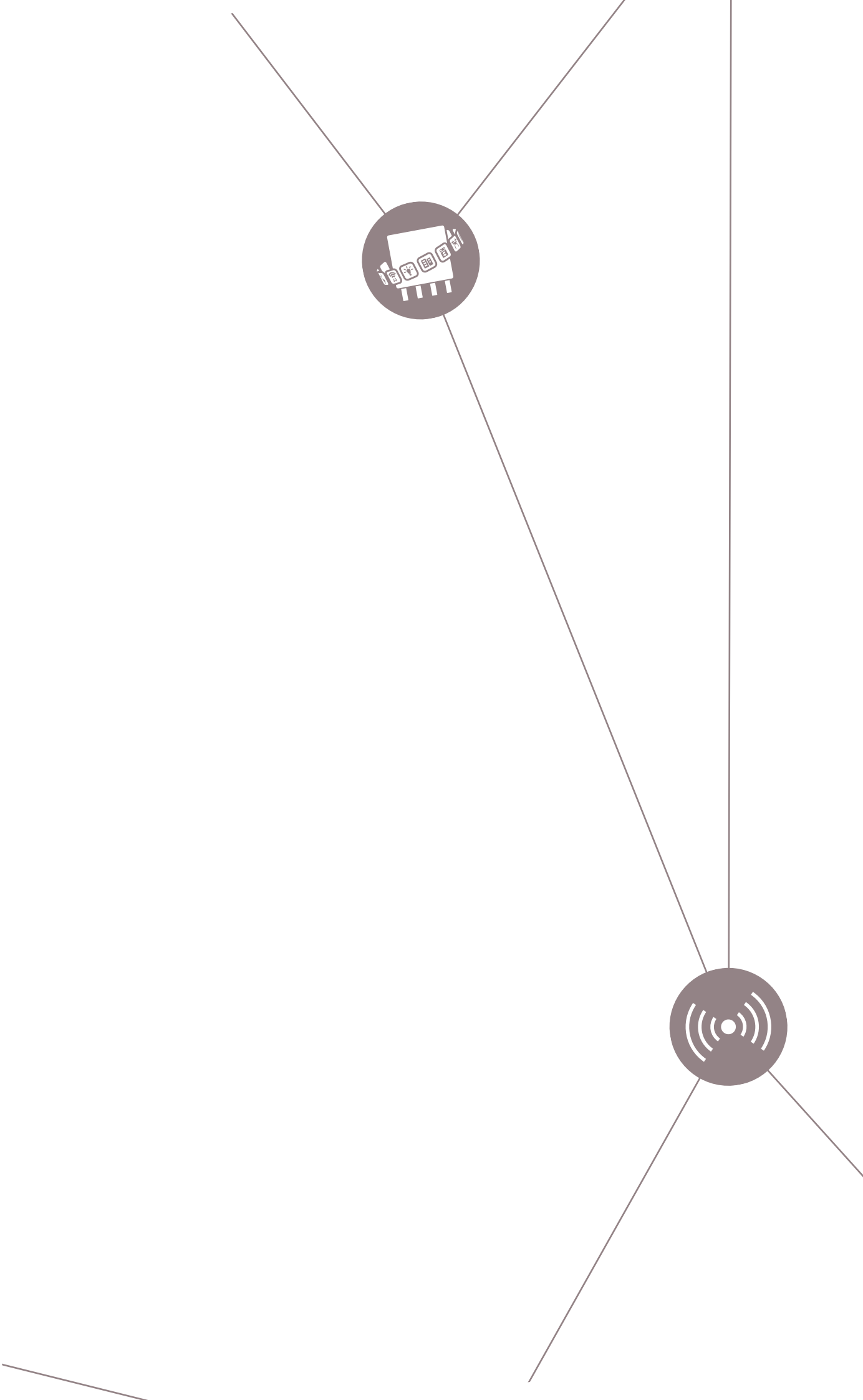

At Infineon, we put our customers at the heart of what we do. We keep them at the forefront of all decisions we make.

在英飞凌，我们将客户置于我们工作的核心。我们始终将其放在所有决策的最前沿。

Andreas Urschitz,
Division President of Power and Sensor Systems
电源和传感系统事业部总裁

Dear customer,

The time of a truly connected real and digital world has arrived. Since the last edition of this brochure, the world as we knew it significantly changed due to the pandemic, posing new challenges in both our private and our professional lives. But new opportunities arose as well. The transformation into a more digital and connected life accelerated at a never-before-seen pace. Humanity relies on technology more than ever - for interactions, productivity, and efficiency. And technology depends on reliable, highly efficient, and high-performance semiconductor solutions.

The way we work may have changed, but one thing remained unchanged: At Infineon, we put our customers at the heart of what we do. We keep them at the forefront of all decisions we make.

The acquisition of Cypress Semiconductor in 2020 was an important step for us. It was the latest stage in our journey to offering an unparalleled range of hardware, software, and security solutions to meet our customers' needs. These needs have always been the key drivers behind our innovations and developments. We enabled system performance optimization through groundbreaking packaging concepts. We created new products which are smaller and deliver more. We expanded our manufacturing capabilities and global manufacturing footprint. We used our 40 years of know-how and deep system understanding to develop our next-generation silicon and wide-bandgap power portfolio, and our cutting-edge sensor offering. All the investments we make and all the features we build into our solutions aim to translate into benefits for our customers. We want to enable YOU to leapfrog your competition.

The Power and Sensing Selection Guide is intended to help you find the best-fit solutions for your needs. With this catalog, we remove choice overload and decision stress by arranging our broad cutting-edge portfolio and game-changing solutions around applications and technologies in a synthesized and easy-to-digest format.

Explore our comprehensive selection of power and sensor system solutions that make life easier, safer, and greener.

尊敬的顾客，

现实世界与数字世界真正互联的时代已经到来。自本手册上一版发布以来，我们所熟知的世界因为疫情而发生了巨大变化，这给我们的个人生活和职业生活都带来新的挑战。但是，我们也遇到了新的机会。我们的世界正以前所未有的速度加速向数字化的互联生活发生转变。为了提高互动、生产力以及效率，人类比以往任何时候都更依赖于技术，这些技术又取决于可靠、高效和高性能的半导体解决方案。

我们的工作方式可能已经发生改变，但有件事没有改变：在英飞凌，我们将客户置于我们工作的核心。我们始终将其放在所有决策的最前沿。

我们在2020年对赛普拉斯半导体的收购是我们重要的一步。也正是因此，我们能够更全面地提供无与伦比的硬件、软件和安全解决方案，从而满足客户的各种需求。这些需求一直是我们创新和发展的重要推动力。我们通过突破性的封装概念实现了系统性能的优化。我们创造了许多体积更小、性能更优的新产品。我们扩大了我们的制造能力以及全球制造规模。我们使用40年的专业知识和对系统的深刻理解来开发我们下一代的硅基和宽禁带电源产品组合，以及我们的尖端传感器产品。我们所进行的所有投资和在解决方案中所开发的所有功能，都旨在为客户带来收益。我们希望能帮助您超越竞争对手。

这份Power and Sensing Selection Guide（电源与传感选型指南）旨在帮助您找到最适合您需要的解决方案。这份目录中，我们以综合、易懂的形式，围绕应用和技术安排了广泛的尖端产品组合和颠覆性的解决方案，希望能借此帮助您消除选择负担和决策压力。

我们全面挑选的电源和传感器系统解决方案，旨在让生活变得更轻松、更安全、更绿色。快来探索吧！

Andreas Urschitz,
Division President of Power and Sensor Systems
电源和传感系统事业部总裁

Contents

Applications	**5**
Advanced system solutions for consumer applications	5
Major home appliances	6
Class D audio amplifiers	13
Smart speaker	15
Contactless power and sensing	17
Robotics	19
Wrist-worn devices	22
Wireless charging	25
SMPS - mobile charger	28
SMPS - TV power supply	30
Advanced system solutions for industrial applications	33
Surveillance camera	34
Power over Ethernet	36
LED lighting	38
Power and gardening tools	46
Battery formation	48
Energy storage systems	50
Solar	52
Relay replacement	56
SMPS - embedded power supply	58
SMPS - industrial SMPS	59
SMPS and digital power management solutions for data processing applications	60
DC-DC enterprise power solution for data processing applications	61
SMPS - laptop adapters	64
SMPS - PC power supply	66
SMPS - server power supply	67
SMPS - telecom power supply	69
Advanced system solutions for transportation and infrastructure	72
Fast EV charging	73
E-mobility	78
Light electric vehicles and forklift	81
20-300 V MOSFETs	**83**
500-950 V MOSFETs	**117**
Wide bandgap semiconductors	**148**
Discrete IGBTs and silicon power diodes	**170**
Power management ICs	**192**
Intelligent power switches and modules	**271**
Gate-driver ICs	**281**
Microcontrollers	**316**
XENSIV™ sensors	**347**
Packages	**387**

Advanced system solutions for consumer applications

- Major home appliances
- Class D audio amplifiers
- Smart speaker
- Contactless power and sensing
- Robotics
- Wrist-worn devices
- Wireless charging
- SMPS - mobile charger
- SMPS - TV power supply

Major home appliances

Innovative approach for air conditioning

Product designers are facing the daunting challenge of developing smaller, smarter, more powerful, and more energy-efficient appliances. Based on industry-leading technology and manufacturing expertise, Infineon's line of innovative components for household appliances meets and exceeds even the most rigorous requirements for reliability and quality. The block diagram of an air conditioning system shown below, together with the product selection table, provides an effective recommendation for engineers to select the right component for each power management stage inside major home appliances.

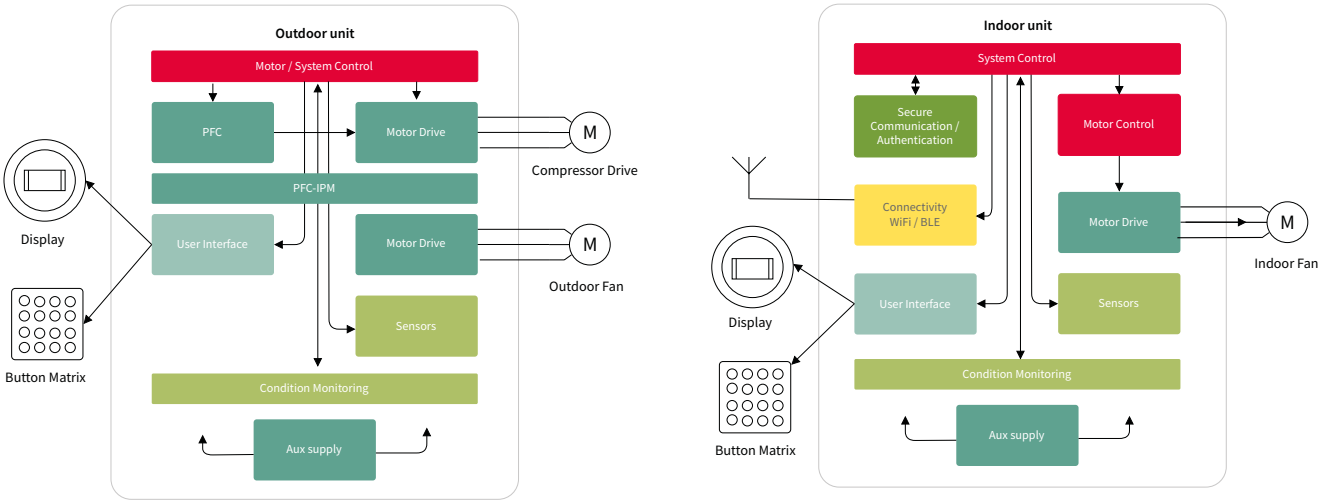

In addition to efficiency gain through power solutions, Infineon's XENSIV™ sensor portfolio also enhances major home appliances' operation through advanced sensor-enabled use cases such as condition monitoring and predictive maintenance to detect potential device failures before they occur. Furthermore, integration of voice control or presence detection in those appliances increases user convenience and results in even more efficient devices.

Product category	Product family	Selection/benefits
Sensors	Pressure sensor	Airflow monitoring
	MEMS microphone	Noise monitoring
	Magnetic current sensor	Current sensing
	3D Magnetic sensor	Vibration and position monitoring
	Linear Hall sensor	Linear vibration monitoring
	Hall sensors and switches	Opened and closed lid detection
	Double Hall sensor	Speed and direction measurement
	32-bit XMC4000 industrial microcontroller Arm® Cortex®-M4	Data processing, sensor system management, cloud connection management and ethernet connectivity
	OPTIGA™ embedded security solutions	Data and cloud Security

Recommended products

Functional block	Topology	Voltage class	Technology/product family	Selection/benefit
PFC	IGBT – PFC (SC)	600 V	HighSpeed H3	Reference
	IGBT – PFC (SC)	650 V	TRENCHSTOP™ IGBT7 T7	Recommendation
	IGBT – PFC (no SC)	650 V	TRENCHSTOP™ 5 H5	Recommendation
	IGBT – PFC	600 V/650 V	TRENCHSTOP™ portfolio with Advanced Isolation	Easy to use
	IGBT – PFC (no SC)	650 V	TRENCHSTOP™ 5 WR5, TRENCHSTOP™ WR6 HCC	Best price performance
	IGBT – PFC TP (no SC)	650 V	CoolSiCTM Hybrid Discrete	Totem-pole best performance
	MOSFET – PFC	600 V	CoolMOS™ P7	Reference
	Diode – PFC	650 V	Rapid 1 and Rapid 2 diodes	Recommendation
	IPM – PFC CCM	650 V	CIPOS™ Mini PFC interleaved IPM series, CIPOS™ PFC integrated IPM series	Recommendation
	Low-side gate driver IC – PFC	22 V	EiceDRIVER™ 2EDN8524F/1EDN8511B	8 V ULVO 4A/4A and 4A/8A
		25 V	Single low-side driver EiceDRIVER™ 1ED44176N01F, 1ED44175N01B, 1ED44173N01B	Integrated overcurrent protection, fault and enable function in DSO-8/SOT23-6
			Dual low-side driver IRS4427S	Rugged and reliable in DSO-8
			Single low-side driver IRS44273L	Rugged and reliable in SOT23-5
	Half-bridge gate driver – totem pole PFC	650 V	EiceDRIVER™ 2ED2304S06F, 2ED2182S06F	SOI with integrated bootstrap diode
Inverter	IGBT B6-VSI	650 V	TRENCHSTOP™ IGBT6	Performance
	IGBT – B6-VSI	600 V	RC-Drives Fast, RC-D2	Cost/performance
	MOSFET - B6-VSI	600 V	CoolMOS™ PFD7	Cost/performance
	IPM – B6-VSI	600 V	CIPOS™ Mini, CIPOS™ Micro	Recommendation
	Half-bridge gate driver ICs	650 V	EiceDRIVER™ 2ED2304S06F, 2ED2182S06F	SOI with integrated bootstrap diode
	Half-bridge gate driver ICs	600 V	EiceDRIVER™ 2EDL05I06PF, 2EDL23I06PJ, IRS2890DS	Integrated bootstrap diode/FET
	Three-phase gate driver ICs	600 V	6EDL04I06PT, IR2136S, 6ED003L06-F2	OCP, fault and enable function
AUX	Fixed-frequency flyback	700 V/800 V	CoolSET™ Gen 5	Recommendation
Microcontroller/motor control IC	32-bit Arm® Cortex®-M4	-	XMC4100/XMC4200/ PSoC®	Recommendation
	Motor/PFC controller (incl. motion control algorithm)	-	iMOTION™ IMC300	Recommendation
	Smart IPM for motor control	600V	iMOTION™ IMM100	Recommendation
Microcontroller supply	Linear voltage regulator	Up to 20 V	IFX1763, IFX54441, IFX54211, IFX3008	Efficiency
Communication	CAN transceiver	-	IFX1050, IFX1051, IFX1040	Robustness
Position sensing	Angle sensor	-	TLE5009, TLI5012B	Recommendation
	Hall switch	-	TLI496x	Recommendation
Condition monitoring and predictive maintenance	Pressure sensor	-	DPS368	Airflow monitoring
	MEMS microphone	-	IM69D130	Noise monitoring
	Magnetic current sensor	-	TLI4971	Current sensing
	3D Magnetic sensor	-	TLI493D-W2BW	Vibration and position monitoring
	Linear Hall sensor	-	TLE4997E	Linear vibration monitoring
	Hall sensors and switches	-	TLE4961-1K, TLE4961-3K; TLE4964-4M, TLE4913	Opened and closed lid detection
	Double Hall sensor	-	TLI4966G	Speed and direction measure-ment
	32-bit XMC4000 industrial microcontroller Arm® Cortex®-M4	-	XMC4700	Data processing, sensor system management, cloud connection management and ethernet connectivity
	OPTIGA™ embedded security solutions	-	OPTIGA™ Trust M	Data and cloud Security

For more details on the product, click on the part number or contact our product support.

Major home appliances

Highest performance and efficiency for induction cooking

Resonant-switching applications such as induction cooktops and inverterized microwave ovens have unique system requirements. The consumer marketplace demands them to be cost-effective, energy efficient, and reliable. To achieve the named goals, designers need solutions that are developed specifically for these applications.

Infineon's reverse conducting (RC) discrete IGBTs were developed for resonant switching with a monolithically integrated reverse conducting diode. With technology leadership and a broad portfolio of devices with voltage classes ranging from 650 to 1600 V, Infineon provides the industry benchmark performance in terms of switching and conduction losses.

The latest RC-H5 family, previously offered with blocking voltages of 1200 V and 1350 V in a wide current range from 20 A to 40 A, is now with the addition of a new 1350 V, 20 A IGBT completed.

The Integrated Power Device Protect (IPD Protect), IEWS20R5135IPB, is a new device in Infineon's portfolio for induction cooking applications, which adds new functionalities to standard discrete IGBTs. The innovative IPD Protect combines a 1350 V, 20 A IGBT in RC-H5 technology with a unique protecting gate driver IC in a TO-247 6-pin package.

The RC-E family is cost- and feature-optimized specifically for low- to mid-range induction cookers and other resonant applications. This new family offers Infineon's proven quality in RC IGBTs with the best price-performance ratio and ease of use. Infineon also offers a range of complementary products, such as low-side gate drivers and high-voltage level-shift gate drivers which can be used with the IGBTs, as well as in the central control and power supply subsystems of induction cooking appliances.

Induction heating inverter (current resonance)
Half-bridge

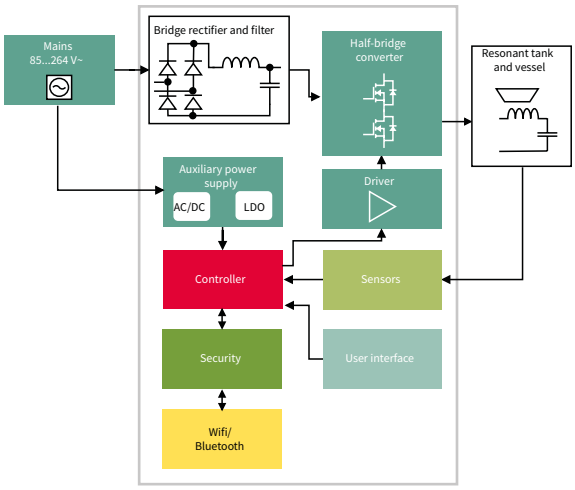

Induction heating inverter (voltage resonance)
Single-switch

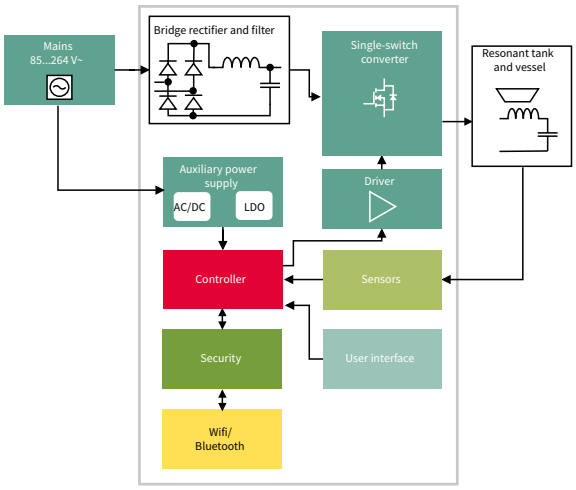

For more details on the product, click on the part number or contact our product support.

Recommended products

Functional block	Topology	Voltage class	Technology/product family	Selection/benefit
DC-AC	Series-resonant half-bridge	650 V	Reverse conducting R5	Recommendation
	Quasi-resonant single switch	1100 V	Reverse conducting R6	Recommendation
	Quasi-resonant single switch	1200 V	Reverse conducting R3	Recommendation
	Quasi-resonant single switch	1350 V	Reverse Conducting R5, Reverse Conducting E1	Recommendation
	Quasi-resonant single switch	1600 V	Reverse Conducting R5	Recommendation
	Quasi-resonant single switch and protective driver		IPD Protect	Integrated power device
Gate-driver ICs	Low-side gate driver	25 V	EiceDRIVER™ 1ED44176N01F, 1ED44175N01B, 1ED44173N01B, IRS44273L	1ED integrated with overcurrent-protection fault and enable functions
	Half-bridge gate driver	650 V/600 V	EiceDRIVER™ 2ED2304S06F, 2ED2182S06F, 2EDL23I06PJ	SOI with integrated bootstrap diode
	Isolated gate driver	1200 V	EiceDRIVER™ 1EDI20I12AF, 1EDI20I12MF, 2ED020I12-F2	Galvanic isolation, separate sink/source output, DESAT, Miller clamp
Microcontroller	32-bit Arm® Cortex®-M0	-	XMC1302	Recommendation
Microcontroller supply	Linear voltage regulator	Up to 20 V	IFX54211	Efficiency
AUX	Fixed-frequency flyback	700 V	CoolSET™ F5 *	Recommendation

For more details on the product, click on the part number or contact our product support.

Refrigerators

Higher efficiency at lower cost

Today, consumers are not only looking at energy consumption and noise levels. Compact design coupled with maximum storage space is also playing an increasingly important role. In addition, there is a desire for intelligent appliances that can be easily integrated into the home network. From the manufacturer's point of view, the challenge is to meet the stricter regulations on energy efficiency while at the same time ensuring the form factor and a reduction in costs. Thus, intelligent, compact, energy- and cost-efficient drive solutions for refrigerators and freezers meet the high customer requirements.

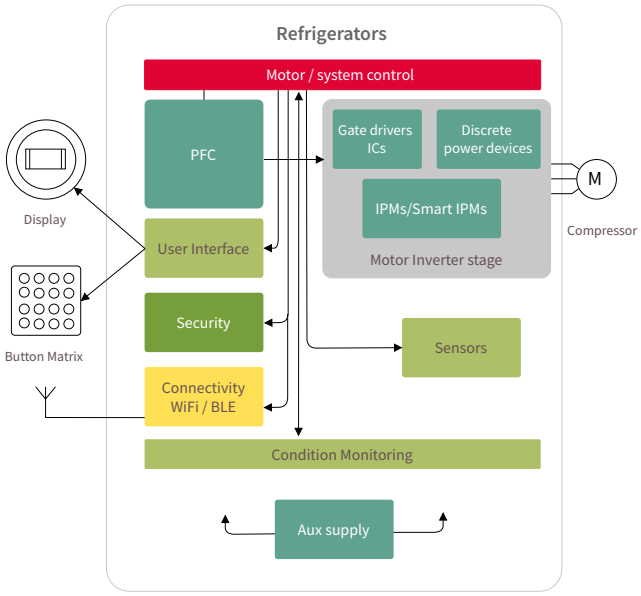

Infineon offers a comprehensive portfolio for refrigerator compressors. Whether you choose the highest level of integration with our intelligent power modules (IPM) or aim for the best price/performance ratio with discrete components, our IGBTs, MOSFETs, gate drivers, and microcontrollers are designed to work together seamlessly. CIPOS™ family of IPMs is the optimal solution for highly integrated compressor drives whilst discrete solutions like the 600 V RC-D2 IGBT or the CoolMOS™ PFD7 SJ MOSFET are the best choice whenever layout flexibility and thermal performance optimization are the key design targets. If full-load operation and EMI performance are key for the design, the 600 V RC-D2 is the best choice. The diode is monolithically integrated and its current rating has been optimized for price and performance. The RC-D2 is the first IGBT family to introduce the SOT-223 package to further improve the price with a smaller package that is pin-to-pin compatible and substitutable with the DPAK package. They can all be combined with iMOTION™ products for dedicated motor control. For the auxiliary power supply, the CoolSET ™ family rounds up our power portfolio by offering increased robustness and performance.

Our PSoC® microcontroller family, AIROC™ Wi-Fi & Combos connectivity products and XENSIV™ sensors complete the portfolio needed for a truly smart refrigerator. The energy-efficient CIPOS™ modules integrate various power and control components to increase reliability, optimize board size and reduce system costs. This simplifies power supply design and shortens time-to-market. Infineon offers the OPTIGA™ Trust hardware security solution and enables secure access to all major cloud providers.

CoolMOS™ PFD7 for next-level energy saving

Although both MOSFETs and IGBTs can be used in refrigerator compressor drives, as most of the time, the refrigerator operates under light load, the MOSFET is highly recommended due to its lower conduction loss, thus reducing overall power loss at this condition.

The 600 V CoolMOS™ PFD7 high-voltage MOSFET series, shaped by Infineon's experience of more than twenty years in pioneering in superjunction SJ technology innovation, sets a new benchmark in 600 V SJ technologies. This product family combines best-in-class performance with state-of-the-art ease of use, features an integrated fast body diode ensuring a robust device and allowing for reduced BOM for the customer.

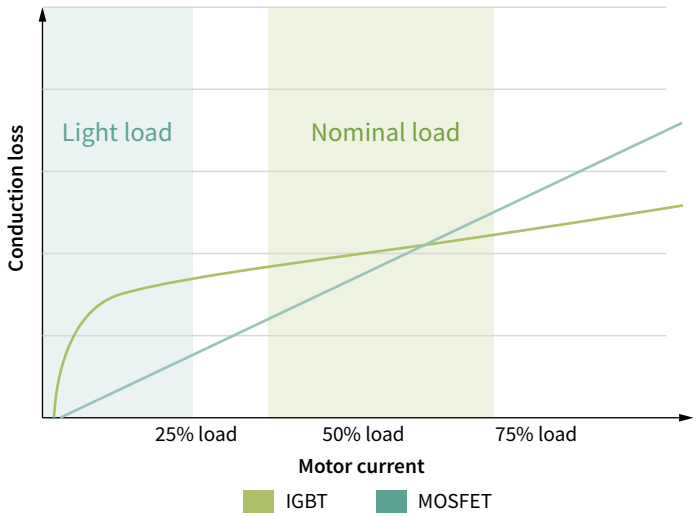

Smart, connected and secured – system solutions for the new home appliance era

Modern refrigerators can sense their environment by being smart and connected. They provide data to their users as well as to the manufacturer (who can remotely analyze the performance data and suggest preventive maintenance). In this data exchange, secure communication systems play a crucial role.

Components and system solutions from Infineon enable you to build smart home appliances while providing secure data acquisition, control, and device connectivity. Furthermore, they enable the highest device efficiency, smallest form factors, and improved carbon footprint with smart power supply designs. Benefit from one of the most comprehensive, out-of-the-box product and design portfolios on the market to best meet your unique application needs.

Recommended products

Functional block	Topology	Voltage class	Technology/product family	Selection/benefit
PFC AC-DC	IGBT – PFC (SC)	600 V	HighSpeed H3	Reference
	IGBT – PFC (SC)	650 V	TRENCHSTOP™ IGBT7 T7	Recommendation
	IGBT – PFC (no SC)	650 V	TRENCHSTOP™ 5 H5	Recommendation
	IGBT – PFC	600 V/650 V	TRENCHSTOP™ portfolio with Advanced Isolation	Easy to use
	IGBT – PFC (no SC)	650 V	TRENCHSTOP™ 5 WR5, TRENCHSTOP™ WR6 HCC	Best price performance
	IGBT – PFC TP (no SC)	650 V	CoolSiC™ Hybrid Discrete	Totem-pole best performance
	MOSFET – PFC CCM	600 V	CoolMOS™ P7	Reference
	Diode – PFC CCM	650 V	Rapid 1 and Rapid 2 diodes	Recommendation
	Controller – PFC CCM	–	ICE2PCS0xG, ICE3PCS0xG	Recommendation
	IPM – PFC CCM	650 V	CIPOS™ Mini PFC interleaved IPM series, CIPOS™ PFC integrated IPM series	Recommendation
	Low-side gate driver IC – PFC	22 V	EiceDRIVER™ 2EDN8524F/1EDN8511B	8 V ULVO 4A/4A and 4A/8A
		25 V	Single low-side driver EiceDRIVER™ 1ED-44176N01F, 1ED44175N01B, 1ED44173N01B	Integrated overcurrent protection, fault and enable function in DSO-8/SOT23-6
			Dual low-side driver IRS4427S	Rugged and reliable in DSO-8
			Single low-side driver IRS44273L	Rugged and reliable in SOT23-5
	Half-bridge gate driver – totem-pole PFC	650 V	EiceDRIVER™ 2ED2304S06F, 2ED2182S06F	SOI with integrated bootstrap diode
Inverter	IGBT B6-VSI	650 V	TRENCHSTOP™ IGBT6	Performance
	IGBT – B6-VSI	600 V	RC-Drives Fast, RC-D2	Cost/performance
	MOSFET - B6-VSI	600 V	CoolMOS™ PFD7	Cost/performance
	IPM – B6-VSI	600 V	CIPOS™ Mini	Recommendation
	Half-bridge gate driver ICs	650 V	EiceDRIVER™ 2ED2304S06F, 2ED2182S06F	SOI with integrated bootstrap diode
	Half-bridge gate driver ICs	600 V	EiceDRIVER™ 2EDL05I06PF, 2EDL23I06PJ, IRS2890DS	Integrated bootstrap diode/FET
	Three-phase gate driver ICs	600 V	6EDL04I06PT, IR2136S, 6ED003L06-F2	OCP, fault and enable function
AUX	Fixed-frequency flyback	700 V/800 V	CoolSET™ Gen 5	Recommendation
Microcontroller/motor control IC	32-bit Arm® Cortex®-M4	-	XMC4100/XMC4200	Recommendation
	Motor/PFC controller (incl. motion control algorithm)	-	iMOTION™ IMC300	Recommendation
	Smart IPM for motor control	600V	iMOTION™ IMM100	Recommendation
Microcontroller supply	Linear voltage regulator	Up to 20 V	IFX1763, IFX54441, IFX54211, IFX3008	Efficiency
Communication	CAN transceiver	-	IFX1050, IFX1051, IFX1040	Robustness
Position sensing	Angle sensor	-	TLE5009, TLI5012B	Recommendation
	Hall switch	-	TLI496x	Recommendation
Condition monitoring and predictive maintenance	Pressure sensor	-	DPS368	Airflow monitoring
	MEMS microphone	-	IM69D130	Noise monitoring
	Magnetic current sensor	-	TLI4971	Current sensing
	3D Magnetic sensor	-	TLI493D-W2BW	Vibration and position monitoring
	Linear Hall sensor	-	TLE4997E	Linear vibration monitoring
	Hall sensors and switches	-	TLE4961-1K, TLE4961-3K; TLE4964-4M, TLE4913	Opened and closed lid detection
	Double Hall sensor	-	TLI4966G	Speed and direction measurement
	32-bit XMC4000 industrial microcontroller Arm® Cortex®-M4	-	XMC4700	Data processing, sensor system management, cloud connection management and ethernet connectivity
	OPTIGA™ embedded security solutions	-	OPTIGA™ Trust M	Data and cloud Security

XENSIV™ sensor solutions for smart refrigerators

Product category	Product family	Benefits
Sensors	XENSIV™ MEMS microphones IM69D130	High-performance microphone with low self-noise (high SNR) and low distortions enables noise monitoring for advanced predictive maintenance analytics
	XENSIV™ digital barometric pressure sensors DPSxxx	Advanced predictive maintenance analytics are enabled based on highest precision and relative accuracy over a wide temperature range to detect anomalies in airflow
	XENSIV™ TLV493D-A1B6 3D magnetic sensor	Accurate three-dimensional sensing with extremely low power consumption in a small 6-pin package to enable vibration and position monitoring of the compressor
	XENSIV™ TLI4970 current sensor	Fully digital solution featuring high precision and ease of use, significantly reduces overall implementation efforts as well as PCB space to enable cost fan and compressor current measurement
	XENSIV™ 60 GHz radar sensor	Accurate presence detection and vibration detection based on ability to track sub-millimeter motion at high speed and accuracy, in both stand-alone chip as well as system solution available

For more details on the product, click on the part number or contact our product support.

Class D audio amplifiers

No compromise on quality – products for exceptional audio performance

At Infineon, we manufacture power-efficient class D audio amplifier solutions that maintain best-in-class audio quality, without heating up the surroundings. We believe smaller and lighter is better, and that the amplifier embedded in your product should be heard, but not seen. Our amplifier solutions help you design robust, flexible products that meet the needs of your customers and the market. Choose from our high-performance class D audio amplifier solutions for all power ranges and application requirements, from the smallest fully integrated single-chip solutions to highly scalable driver and power MOSFET combinations (for a full portfolio, see Audio amplifier ICs).

Design with Infineon's solutions to benefit from:

- Exceptional audio performance
- Maximized power efficiency
- Maximized output power
- Design freedom
- Fast time to market

Portable/battery powered audio applications

Battery powered speakers:

- On-the-go Bluetooth® speakers
- Docking speakers
- Boom boxes
- Wearable speakers

Home audio applications

- Multiroom systems
- Audio hub
- TVs
- Sound bars
- Home theater systems
- Smart speakers

Professional audio applications

- Power-over-ethernet (PoE) audio systems
- Touring amplifiers
- Active speakers
- Public announcement 70-100 V systems
- Music instrument amplifiers

Home audio

Modern home audio products vary in shapes, sizes and configurations, but common requirement is great sound in combination with outstanding industrial and acoustic design. In addition to producing exceptional sound quality, MERUS™ amplifiers from Infineon can completely eliminate the need for bulky and expensive LC output filters and heatsinks. This allows the design of new innovative and great-sounding home audio products in form factors and shapes that were previously unthinkable.

Solution example: 2.1 configuration (2xBTL + 1xPBTL)

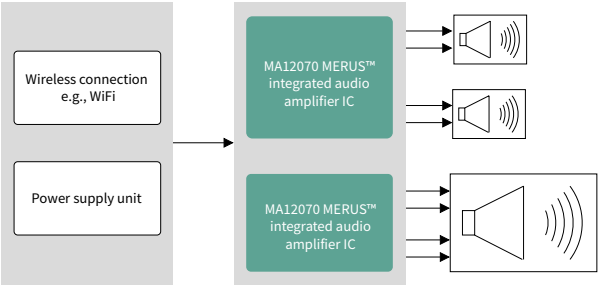

Solution specification

Number of audio channels: 2 bridge-tied load (BTL) and 1 parallel BTL channels

Peak power output: 2x80 W @ 4 Ω, 10% THD and 160 W @ 2 Ω, 10% THD

Featured audio ICs: 2x MA12070

4.1 configuration (4xBTL + 1xPBTL)

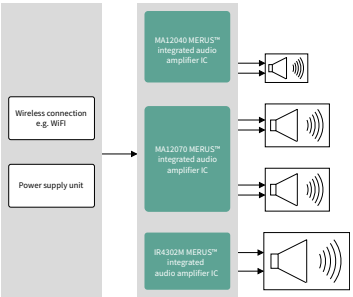

Solution specification

Number of audio channels: 4 bridge-tied load (BTL) and 1 parallel BTL channels

Peak power output: 2x80 W @ 4 Ω, 10% THD and 160 W @ 2 Ω, 10% THD

Featured audio ICs: MA12040, MA12070, IR4302M, MA5332MS

* Coming soon

For more details on the product, click on the part number or contact our product support.

Portable audio

When designing portable/battery-powered audio devices, it is essential to maximize battery playback time, and at the same time, maintain excellent audio performance. Infineon's MERUS™ amplifiers provide up to twice as long battery playback time in combination with the best-in-class audio performance and unsurpassed sound quality.

Solution example: 2.1 configuration (2xSE + 1xBTL)

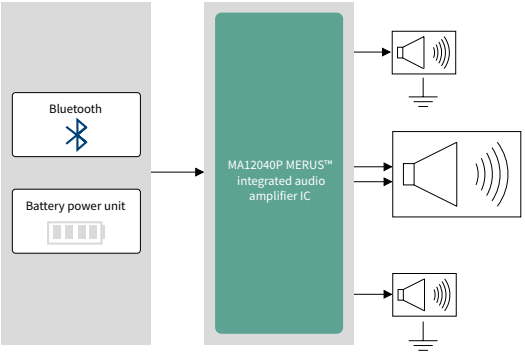

Solution specification

Number of audio channels: 2 single-ended (SE) and 1 bridge-tied load (BTL) channels

Peak power output: 2x10 W and 40 W @ 4 Ω, 10% THD

Featured audio IC: MA12040P including volume control and limiter

Solution example: 2.1 configuration (2xBTL + 1xPBTL)

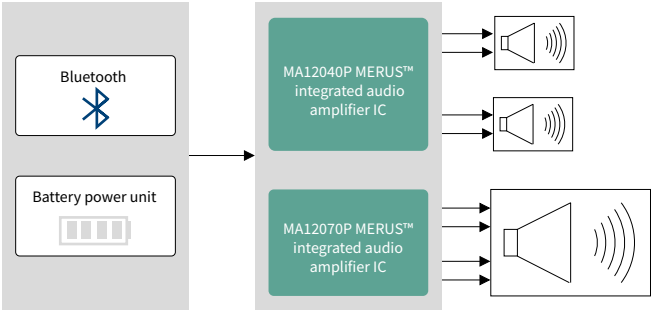

Solution specification

Number of audio channels: 2 bridge-tied load (BTL) and 1 parallel BTL channels

Peak power output: 2x40 W @ 4 Ω, 10% THD and 160 W @ 2 Ω, 10% THD

Featured audio ICs: MA12040P and MA12070P including volume control and limiter

Professional audio

Professional audio equipment is all about maximizing output power and power density. With the conception of Infineon's MERUS™ multilevel class D technology and GaN-based CoolGaN™ e-mode HEMTs, it is now possible to conceive both amplifiers and power supply units with great audio performance and high efficiency in a very compact design. For engineers developing amplifiers, Infineon offers both monolithic and chip-set solutions with versatile MOSFET combinations for the scaling of output power.

Solution example: active speakers

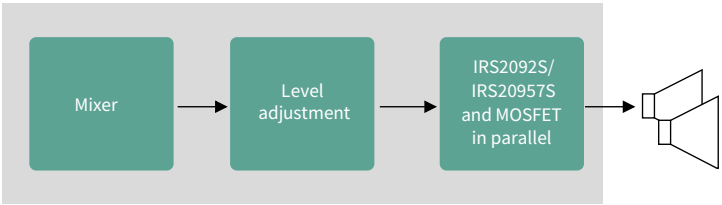

Solution specification

Number of audio channels: 2 half-bridge channels

Peak power output: 500 W @ 4 Ω, 1% THD

Featured audio ICs: IRS2092S, IRS20957S

Solution example: public announcement 70-100 V system

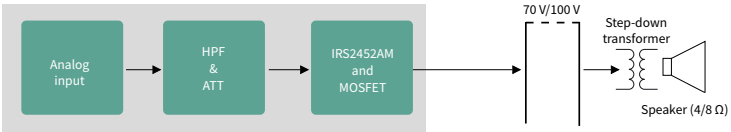

Solution specification

Number of channels: 2 half bridge channels

Peak power output: 500 W, 70 V_{rms}/100 V_{rms}, 1% THD

Featured audio IC: IRS2452AM

For more details on the product, click on the part number or contact our product support.

Smart speaker

Speakers for an intuitive and outstanding user experience

Once a novelty in households, smart speakers are more and more becoming increasingly commonplace. Rising user expectations accompany this rapid adoption. However, frustration with devices that do not understand or hear commands leads to lower user adoption. Consequently, growth rates for smart speakers are failing to reach their full potential. Components such as MEMS microphones, touch controllers, and new technologies such as radar are vital in improving the user experience in the smart speaker segment.

Infineon has long-standing expertise in sensor, connectivity and power solutions that fulfill the consumer market requirements in terms of outstanding performance, reliability and energy efficiency.

Features and benefits

Key features	Key benefits
Low self-noise (high SNR) and distortion, a wide dynamic range, plus a high acoustic overload-point microphone	Improved audio input and thus command recognition, especially in extended use cases such as whispering or longer distances to the speaker for better user experience
Ability to track sub-millimeter motion at high speed and accuracy	Precise object/presence detection for more contextual awareness to ease interaction
Infineon's proprietary multilevel switching technology at fully rated power in a wide range of audio products	Very low power loss under all operating conditions, enabling the class D audio amplifier to be used in filterless configurations
Ultra-low-power Wi-Fi and ultra-high power efficiency of the audio amplifier	Extended battery playback time or the reduction of battery size without compromising on battery playback time to save cost
Highly efficient and power-dense SMPS solutions	Highly efficient charger in small form factor
Capacitive touch controller with state-of-the-art noise immunity, water resistance and sleek, futuristic user interfaces	Reliable and durable speaker HMI with advanced inductive touch sensors
Best-in-class interoperability with the most widely deployed wireless IP	Connectivity for highest interoperability and performance without dropouts anywhere in the home
IoT security controller to maintain speaker's unique identity and integrity	Easy and secure cloud provisioning services

Application diagram

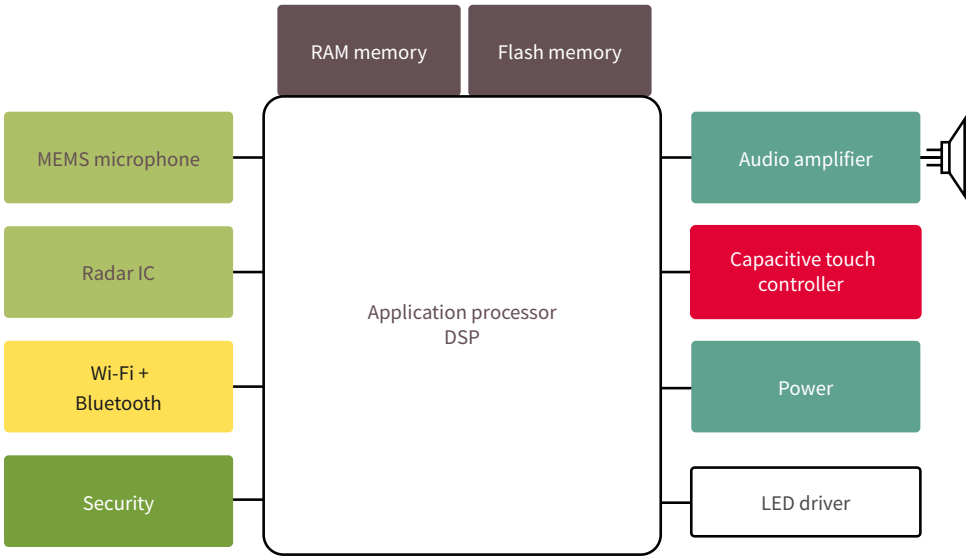

Recommended products

Functional block	Product family	Topology	Product	Benefits
Audio input	Microphones	-	XENSIV™ MEMS microphones IM69D130	› High-performance microphone with low self-noise (high SNR) and low distortions, setting a new performance benchmark for a superior user experience
Audio output	Class D amplifier	-	MERUS™ class D audio amplifiers MA120xx	› Cooler, smaller and lighter amplifiers designed to maximize power efficiency and dynamic range while providing best-in-class audio performance in product form factors for great sounding audio products › Extended battery playback time or the reduction of battery size without compromising on battery playback time to save cost
Sensing (radar)	Radar sensor	-	XENSIV™ 60 GHz radar sensor	› Accurate presence detection and vibration detection based on the ability to track sub-millimeter motion at high speed and accuracy, both stand-alone chip as well as system solution available
Connectivity	Wi-Fi + Bluetooth® combos	-	AIROC™ Wi-Fi and Combos	› Best-in-class interoperability to the widest deployed wireless IP › Whole-home range with high throughput for multi-channel audio and RSDB (Real Simultaneous Dual Band) for speaker sub-networks › Ultra-low-power technology designed with battery operation in mind
Sensing (touch)	Capacitive sensing touch controller	-	CapSense® Capacitive Touch Sensing Controller	› State-of-the-art noise immunity (SNR > 100:1) & water rejection have made CapSense® the industry leader › Advanced inductive touch sensors make possible sleek, futuristic user interfaces with metallic overlay
Security	IoT security controller	-	OPTIGA™ Trust M	› Easy and secure provisioning services with OPTIGA™ Trust M for maintaining speaker's unique identity and integrity › Unify different products under unified PKI architecture
Power	USB-C PD controller	-	EZ-PD™ USB-C Controller	› USB-IF certified with market-proven USB-PD stack, ensuring spec compliance and interoperability › Supports all USB-PD profiles commonly used in USB-C power adapters and requires no firmware development › A highly-integrated solution that minimizes incremental BOM costs
Power	ESD protection	-	ESD111, ESD245	› Outstanding low capacitance devices for best signal integrity › High protection performance by ultra-low clamping voltage
Power	Wireless charging	-	15 W inductive wireless power transmitter	› Powerful and cost-effective wireless charging solutions for high performance, smart and secure charging solutions supported by Infineon's unique wireless power controllers
Power: SMPS Flyback converter	High-voltage MOSFETs	Flyback	700 V CoolMOS™ P7 (standard grade)	› Best price-competitive CoolMOS™ SJ MOSFET family › Lower switching losses than a standard MOSFET
		ACF, FMCI	600 V CoolMOS™ PFD7	› Lower Q_{rr}, lower hysteresis loss, low $R_{DS(on)}$
	Control ICs	QR flyback ICs	ICE5QSBG	› High efficiency and low standby power
		FQR flyback IC	XDPS21081	› High power density and ideal for USB-PD
Power: SMPS synchronous rectification	Low-voltage MOSFETs	Synchronous rectification	OptiMOS™ PD	› Low conduction losses and reduced overshoot › Logic-level switching/S308/PQFN 3.3x3.3 packages available
	Control ICs	Synchronous rectification	IR1161LTRPBF	› High efficiency/simple external circuitry
Power: SMPS load switch	Low-voltage MOSFETs	Load switch	OptiMOS™ 30 V	› Low conduction losses › S308/PQFN 3.3x3.3 packages available

For more details on the product, click on the part number or contact our product support.

Smart devices with NFC interface

NFC based configuration, actuation and sensing applications

Near-field communication (NFC) is a mature technology for contactless exchange of data over short distances. Besides the data exchange, NFC technology itself can also transfer power from the polling device to the receiver devices. Due to the working principle of resonant coupling, power transmission via NFC is efficient and user-friendly because it is less sensitive to antenna/coil alignment. The combination of data exchange and energy transfer in one interface and the availability in billions of smartphones make NFC exciting enabler for the following novel use cases:

Passive device parameter configuration: Programming or configuring product operation parameters is sometimes complicated because of access problems or equipment requirements. Using an NFC interface, contactless or even passive operation can be performed anywhere. Modern LED power supplies are already equipped with the NFC interface to enable output current configuration in production, sales channel, and the field. Infineon's NLM product series supports customers to enable NFC configuration functions effectively.

Smart actuator and sensing devices: In the IoT age, smart devices help people make their life easier and make products more sustainable. NFC technology provides an option to develop battery-less smart devices that operate when the NFC reader device, like a mobile phone, is present. As a complement to mainstream active IoT technology, passive NFC technology is suitable for use cases like a passive smart lock, passive sensor inlay, medical care patch, etc.

With Infineon's new NFC tag-side controller family, a single-chip solution is available to develop cost-effective, miniaturized, actuation or sensing applications operating in either passive or active mode. The NAC1080, with integrated H-bridge and energy harvesting modules, enables cost-effective development of passive smart actuators like passive locks.

The NGC1081 is a low-power controller with ADC/DAC unit, integrated temperature sensor, and sophisticated analog and digital I/Os. It is the ideal solution for contactless sensing applications like temperature logger, gas detector, sensor inlay, medical patch, etc. Furthermore, both sensing and actuation control capability make the NGC1081 a unique product in the market, ideally suited for applications that require these functions – for example, radiator thermostats.

Example: NFC LED power supply

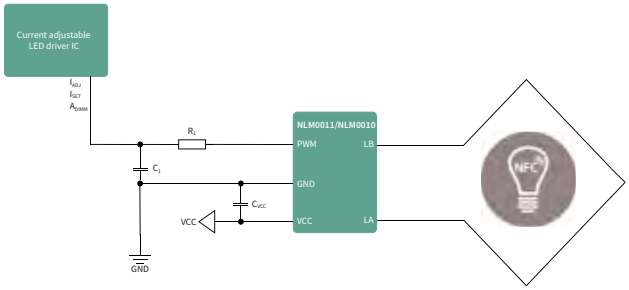

Example: NFC passive lock

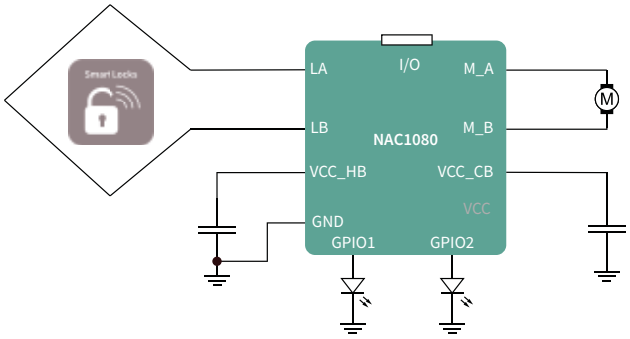

Example: Smart radiator thermostat

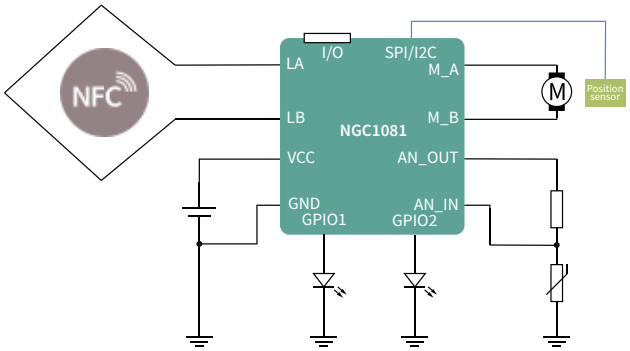

NFC configuration – NLM series

Type	Description	Package	Ordering code
NLM0011	Dual-mode NFC configuration IC with PWM output and CLO function	SOT23-5	NLM0011XTSA1
NLM0010	Dual-mode NFC configuration IC with PWM output, without CLO function	SOT23-5	NLM0010XTSA1

See LED lighting chapter for more information.

NFC actuation and sensing – NAC1080 and NGC1081

Highly integrated single-chip solution

The low-power ARM® Cortex®-M0 based microcontroller with integrated NFC frontend, sensing unit, motor driver, and energy harvesting function enables customers to develop smart actuation and sensing devices with minimum system BOM requirement.

Full flexible software-defined functions

The flexible IC architecture and the smart partitioning between hardware and software enable customers to maximize the utilization of software-defined functions.

Build-in security functions to meet the application requirements

These ICs include hardware security functions such as secure area in Flash, 128 bit AES accelerator and true random generator. A separate secure element can be connected via the digital interface on demand.

Type	NFC	Processor	RAM	NVM	ADC	DAC	I2V	H-Bridge	I^2C	SPI	UART	GPIO	Analog-In	Package
NAC1080*	ISO14443A	32-bit Arm® Cortex®-M0	16 kByte	60 kByte	no	no	no	yes	no	yes	yes	7x	no	PG-DSO-16
NGC1081*	ISO14443A	32-bit Arm® Cortex®-M0	16 kByte	60 kByte	12 bit	10 bit	yes	yes	yes	yes	yes	16x	X4	PG-VQFN-32

* Please, check product availability at our webpage.

For more details on the product, click on the part number or contact our product support.

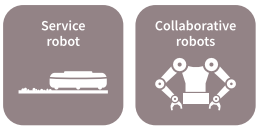

Robotics

Superior solutions for industrial and service robotics

Disruptive technologies have significantly changed our lifestyle in the past few decades. Now a new era is on the horizon – the age of robots. Robots are joining the ranks of innovative and disruptive technologies by revolutionizing traditional habits and processes. Today's robots can identify and navigate through surroundings, work alongside and even interact with humans. Moreover, they teach themselves the skills required to complete a new task.

All this would not be possible without semiconductor solutions. Whether in an industrial robot, a collaborative robot (cobot), a mobile robot for warehouses, last-mile delivery (AGV & AMR) or a domestic robot, intelligent semiconductors are the key enablers for all major robotic functions. Drawing on our insight into all facets of the robotics field, and with a comprehensive portfolio of power products and sensors on offer, Infineon provides reliable system solutions that address the latest trends in robotics. Whether it is artificial intelligence, Internet of Things, smart home, cloud-based services, human-machine interface or any robotics-related field, Infineon has value to add to nearly all robot designs.

Features and benefits

Key features	Key benefits
› Fast time to market	› A complete eco-system of simulations, documentation, and demonstration boards enable a faster time to market
› Complete solutions – broad portfolio from power to connectivity (Wi-Fi & Bluetooth®) and Sensors	› Whatever design specification, Infineon has the answer thanks to its comprehensive portfolio of products and solutions which you can easily tailor to your needs
› Extended battery lifetime and product life spans	› High reliability of Infineon components results in prolonged product life spans
› Overall system size and cost reduction	› Reduction of overall system size and cost thanks to small form factor and compact design of components, both of which are required for highest power density › BOM savings thanks to lowest $R_{DS(on)}$
› Security, quality, and safety	› Trustworthy hardware-based security
› Authentication	› As a security market leader with a proven track record and outstanding partner network for embedded security, Infineon provides highest quality standards and a safety-certified development process › OPTIGA™ Trust enables authentication of components connected to the system (e.g., battery pack recognition to avoid second-party batteries)

Domestic robots - simplifying everyday life and work

Structural system overview: domestic robots

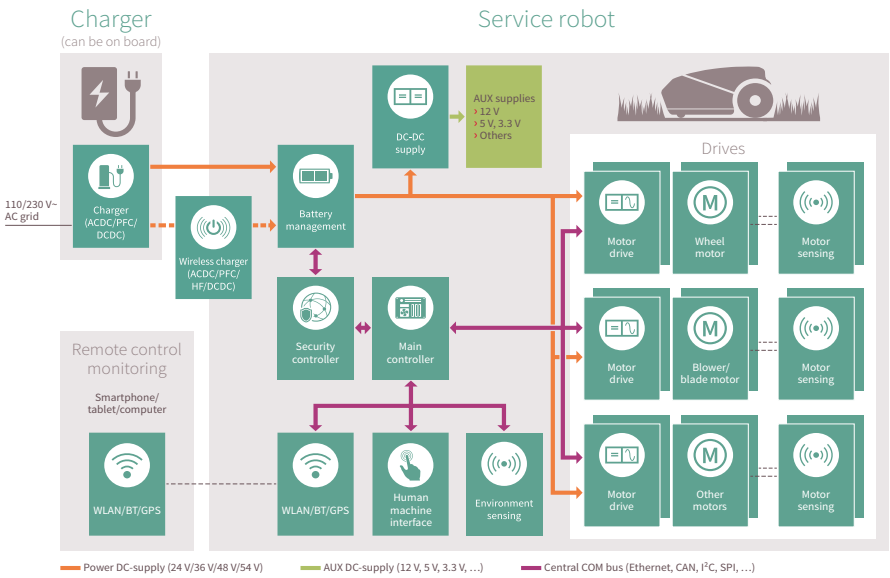

The latest generation of domestic robots has ushered in a new level of assistance and simplicity in homes and professional environments. They directly interact with humans, which introduces unique challenges from a design perspective, especially in domestic environments. Energy efficiency, long battery life as well as security aspects and sensing capabilities are key to user-friendly and safe designs. By choosing Infineon, you get a one-stop semiconductor shop for all your service-robot design needs.

Industrial robots and cobots – advance through collaboration

Structural system overview: industrial robots & cobots

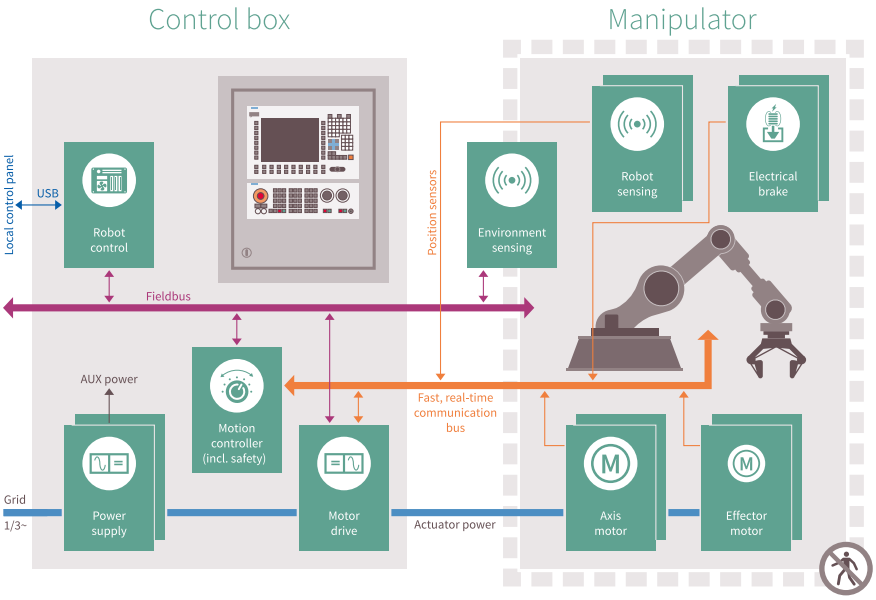

Cobots, or collaborative robots, work outside the limitation of a safety cell, directly interacting with real people. This setup requires a precise set of design features, especially for the sake of workplace safety. With Infineon's semiconductors for cobot systems, you benefit from the expertise of an experienced and reliable partner. Our radar and sensor solutions, for example, provide the tools to uphold even the highest safety standards and allow the robots to leave their formerly fenced working environment.

Mobile robots – driving production and logistics forward

Structural system overview: battery-powered mobile robots

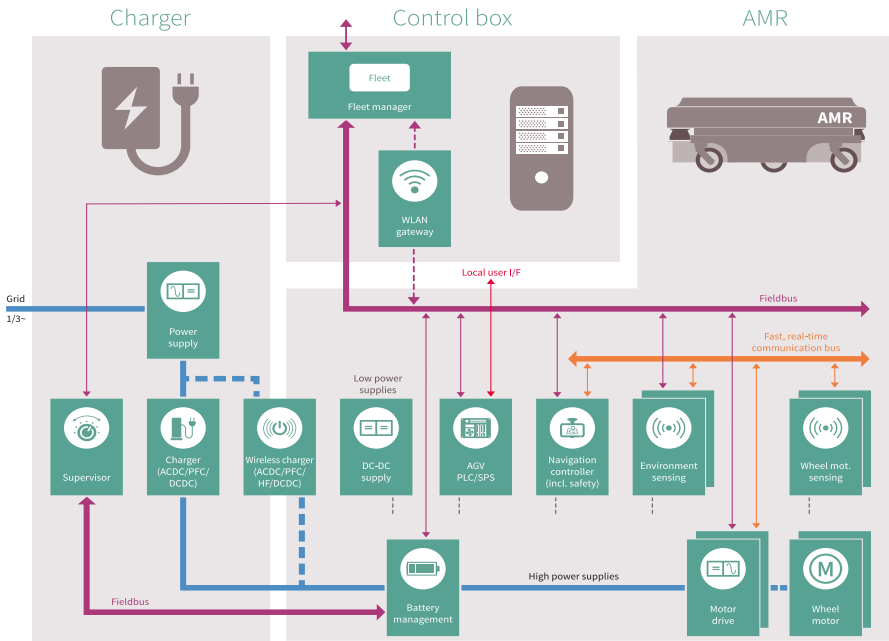

Autonomous mobile robots (AMRs) are a self-driving force behind automated manufacturing processes. Battery-powered systems offer the highest degree of flexibility within working environments. Covering the entire product portfolio for robotics applications – from the power supply to motor drives and sensors for navigation and environment scanning – Infineon is equipped to ensure AMRs can find their way through nearly all production environments.

Recommended products

		Industrial robots		Cobots	Mobile robots (AMR, AGV)	Domestic robots
Common system power		> 5 KW	< 5 KW	100 – 1000 W	200- 500 W	10 – 100 W
Common operating/battery voltage		3 V ~ 400V_{AC}	1 v~ 110 V-220 V_{AC}	1 V~ 110 V-220 V_{AC} / 48 V_{DC} Bus	24 V – 48 V_{DC}	12 V - 36 V_{DC}
Power supply and charger	**Power switch**	650 V and 1200 V CoolSiC™ MOSFET 600 V/650 V IGBT HighSpeed 5 650 V IGBT TRENCHSTOP™ 5 and IGBT 7 T7 650 V and 1200 V EasyPACK™ Module		600 V/650 V CoolMOS™ 650 V CoolSiC™ 20 V - 200 V OptiMOS™ and StrongIRFET™	600 V/650 V CoolMOS™ 650 V CoolSiC™ 20 V - 200 V OptiMOS™ and StrongIRFET™	600 V/650 V CoolMOS™ 650 V CoolSiC™ 20 V - 200 V OptiMOS™ and StrongIRFET™
	PFC power diodes	650 V CoolSiC™ Schottky diode				
	Gate driver EiceDRIVER™ family	low-side single-channel: 1EDN7550B, 1EDN8550B, 1ED44175N01B, 1ED44173N01B low-side dual-channel: 2ED24427N01F, 2EDN7523G				
		1200V single-channel isolated: 1ED3124MU12F, 1EDI60N12AF	650 V half-bridge: 2EDF9275F, 2EDF7175F, 2ED2304S06F, 2ED2182S06F 650 V high-side: 1EDB9275F, 1EDB6275F, 1EDB8275F			
	Microcontroller (MCU)	Arm® Cortex®-M0: XMC1100 or XMC1300 Arm® Cortex®-M4: XMC4200				
Motor control and drive	**Power Switch**	1200 V IGBT 7 S7 1200 V CoolSiC™ MOSFET 1200 V CoolSiC™ Easy1B Module	650 V and 1200 V CoolSiC™ CoolGaN™ 600 V 600 V /650 V/1200 V TRENCHSTOP™ 600 V EasyPIM™ and EasyPACK™ 600 V CIPOS™ (full integration)	60 – 100 V OptiMOS™ and StrongIRFET™ Recommended packages: PQFN 3 x 3 (space savings) Super SO8 (price/performance) TOLL (high current)	60 – 150 V OptiMOS™ and StrongIRFET™ Recommended packages: PQFN 3 x 3 (space savings) Super SO8 (price/performance) TOLL (high current)	25 – 60 V OptiMOS™ and StrongIRFET™ Single- and dual-channel MOSFETs Recommended packages: PQFN 3 x 3 (space savings) Super SO8 (price/performance) TOLL (high current)
	Gate driver EicEDRIVER™ family	1200V single-channel isolated Compact: 1ED31xx and 1ED-MF 1200V single-channel isolated Enhanced: 1ED34xx and 1ED-F2 1200 V half-bridge IR2214SS 1200 V three-phase: 6ED2230S12T	650 V half-bridge: 2EDF9275F, 2EDF7275F, 2EDF7175F, 2ED2304S06F, 2ED2182S06F, 650 V high-side: 1EDB8275F, 1EDB9275F, 1EDB6275F 650 V three-phase: 6EDL04N06PT	200 V half-bridge: IRS2005S, IRS2007S, IRS2008S, 2EDF7275K 200 V three-phase: 6EDL04N02 200 V high-side: 1EDN7550B & 1EDB8550B 160 V half-bridge: 2ED2748S01G, 2ED2738S01G 120 V half- bridge: 2EDL8124G 60 V three-phase programmable: 6EDL7141 25 V low-side: 1ED44173N01B, IRS44273L		
	Microcontroller (MCU)	PSoC: ARM® Cortex® M4F+M0 → CY8C61x8 XMC™: ARM® Cortex® M4F → XMC4800 TRAVEO II™: ARM® Cortex® M7 Dual Core + ARM® Cortex® M0+ → CYT4BF8CD AURIX™: TriCore → TC337				
	Hall switch	XENSIV™ TLx496x				
	Current sensor	XENSIV™ TLI4971				
	Angle sensor	XENSIV™ TLE/TLI5012B, TLE5014SP				
Battery management system (BMS)	**Microcontroller (MCU)**				XMC™: XMC4x00 (ARM® Cortex® - M4F) PSoC: PSoC 4 (ARM® Cortex®M4F+M0)	
	Protection switches				100 V – 150 V OptiMOS™ or StrongIRFET™ IPT015N10N5, IRFS4115	30 V – 80 V OptiMOS™ or StrongIRFET™ BSC007N04LS6, IRL40T209, IRFS7430
	Balancing switches (small signal)				20 V or 30 V N/P MOSFETS in SOT23, TSOP6 or SOT363 dual-channel	
	Monitoring and balancing IC				TLE9012AQU (sensing IC) TLE9015QU (transceiver IC)	
	Battery authentication				OPTIGA™ Trust Charge OPTIGATM Authenticate IDoT	
Sensing (e.g., room mapping, HMI, collision avoidance, air quality)	**Radar**	XENSIV™ 60 GHz: BGT60LTR11AIP XENSIV™ 24 GHz Radar: BGT24LTR11 or BGT24MTR11				
	ToF (Time-of-Flight) 3D image sensors	XENSIV™ REAL3™ 3D image sensor: IRS1645C				
		XENSIV™ REAL3™ 3D image sensor: IRS2381C				
	MEMS Microphones	XENSIV™ MEMS microphones, digital I/F: IM69D130 or IM69D120				
	Other sensors	Pressure sensor: XENSIV™ DPS368 (e.g., airflow control) CO_2 Sensor - XENSIV™ PAS CO_2				
Connectivity and human-machine interface (HMI)	**Wi-Fi**	CYW4373 (1x1 dual-band Wi-Fi 5) CYW43439 (1x1 2.4GHz Wi-Fi 4)				
	HMI	PSoC 4000 - entry-level PSoC 4100 - more touch buttons PSoC 4700 - inductive sensing				
Security	**Authentication and protection**	OPTIGA™ Trust B OPTIGA™ Trust M				
Memory	**NOR Flash**	S25FL-L serial NOR Flash memories Densities 64 MB to 256 MB				
Others	**Voltage regulator**	DC-DC voltage regulator 12 V/5 V or 3.3 V, watchdog, error monitoring, safe state control, BIST etc.				
	LED Driver	Driving currents from 10 mA to 250 mA – linear driver ICs: BCR3xx, BCR4xx Support currents from 150 mA to 3 A – DC-DC switch-mode: ILD4xxx, ILD6xxx				

For more details on the product, click on the part number or contact our product support.

Smartwatch

Smartwatches, sports watches, fitness bands and medical wrist-worn devices

Next level of wrist-worn devices with Infineon's excellent RF, sensing, connectivity, power, memory and security solutions

With its broad product portfolio, Infineon helps wearable manufacturers to overcome the following design challenges across all device categories:

- the need for reliable device and data security to protect personal and sensitive information,
- accurate sensor readings for precise location tracking and recognition between everyday movements and a fall event,
- longer battery lifetimes and small form factors for elegant, unobtrusive designs.

Infineon's widely-deployed AIROC™ Wi-Fi and Bluetooth® Combo ICs portfolio offers the industry's best interoperability and RF performance. Infineon also helps customers to differentiate their offerings with highly efficient, secured and innovative solutions supporting the integration of additional use cases such as smart payment and ticketing, notifications and voice calls, Bluetooth® audio streaming, smart access or different ways of charging (wireless, NFC, USB).

A smartwatch provides a two-way connection via Bluetooth®, cellular baseband or Wi-Fi to a smartphone. It receives electronic communications like texts or voice calls, must display the time and have a glance-able display. These lifestyle devices monitor health and make communication (text, calls) more convenient.

A sports watch is a highly functional, robust and usually water-resistant device. Leisure or professional athletes mainly monitor their health conditions, fitness and sleep activities. Sports watches have fewer features compared to a smart watch as its main focus is on sports tracking.

A wristband or fitness band offers limited functionalities. Compared to a smartwatch, it just covers a selected amount of use cases (e.g. step counting, sleep monitoring, location tracking, access control, etc.).

A medical wrist-worn device measures and analyzes physical activity and body functions of the wearer. These wristbands are used for elderly care, safety, connected health and much more.

Key enabling products

- XENSIV™ 3D image sensor REAL3™
- XENSIV™ 3D magnetic sensor
- XENSIV™ 60 GHz radar sensor
- XENSIV™ pressure sensor
- XENSIV™ MEMS microphones
- Wireless charging
- AIROC™ Wi-Fi & Combos
- AIROC™ Wi-Fi
- Wi-Fi MCUs
- USB Type-C Controller
- Secora™ Connect
- PSoC® 63 Microcontrollers
- PSoC® 4 Bluetooth® Low Energy (Bluetooth® Smart)
- PSoC® 4 including CapSense® technology
- RF switches
- OPTIGA™ Connect Consumer eSIM solution
- OPTIGA™ Authenticate IDoT
- NOR Flash / F-RAM
- GPS LNA
- ESD protection
- AIROC™ Bluetooth® LE & Bluetooth®
- AIROC™ Bluetooth® 5.0 SOC for audio
- Antenna Tuners
- 4G / 5G LTE LNAs

For more details click on the product.

Block diagram for smartwatch, sports watch and wristband

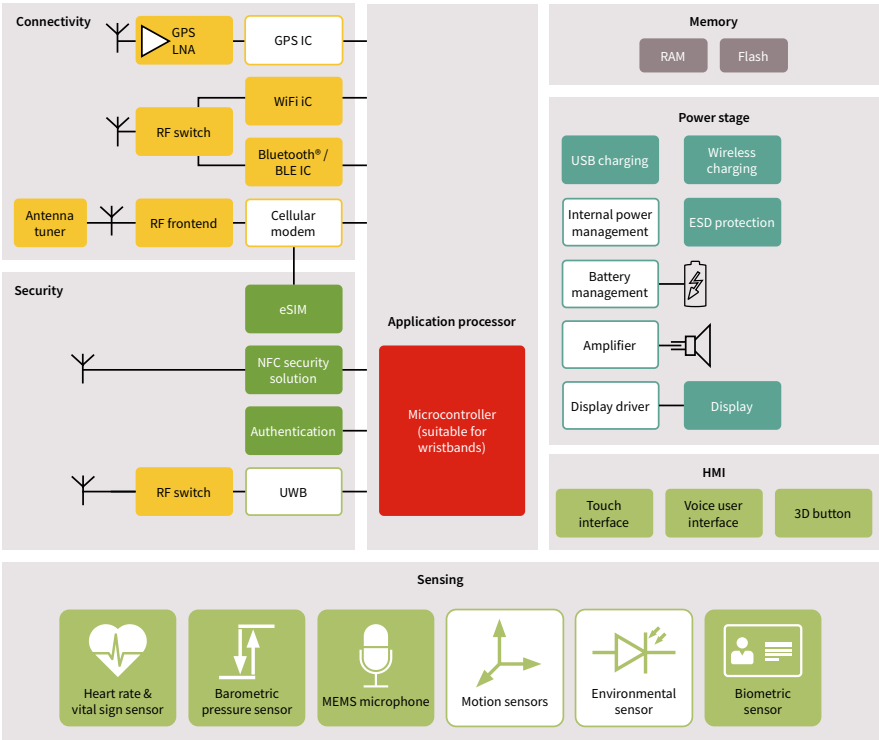

Functional block	Product family	Functional block	Recommended parts and families
Security	› OPTIGA™ Authenticate IDoT (e.g., SLE95401) › OPTIGA™ Connect Consumer eSIM solution (OC1120) › SECORA™ Connect (boosted SiP or MCP, passive NFC) › RF switch (e.g., BGS12WN6, BGS14WMA9)	**Power stage**	› USB Type-C controller (e.g., EZ-PD™ CCG2) › ESD protection (e.g., ESD119-B1, ESD131-B1, ESD307-U1) › Wireless charging
Human-machine interface	› XENSIV™ 3D magnetic sensor (e.g., TLI493-W2BWAO) › XENSIV™ MEMS microphones (e.g., IM69D120/D130) › PSoC® 6 MCU + BLE (e.g., CY8C68237FM-BLE)	**Memory**	› NOR Flash / F-RAM
Sensing	› XENSIV™ pressure sensor (e.g., DPS368/DPS310) › XENSIV™ MEMS microphones (e.g., IM69D120/D130)	**Connectivity**	› 4G / 5G LTE LNAs (e.g., BGA5x1BN6 family) › GPS LNA (e.g., BGA123L4, BGA524N6) › AIROC™ Wi-Fi (e.g., CYW43362, CYW43364) › AIROC™ Wi-Fi and combos (e.g., CYW43439, CYW43012) › AIROC™ Bluetooth® 5.0 SoC for audio(e.g., CYW20719/21) › Antenna tuners (e.g., BGSA12UGL8, BGSA14GN10) › RF switches (e.g., BGS12WN6, BGS14WMA9)

For more details on the product, click on the part number or contact our product support.

Main use cases for wrist-worn devices

Main use cases for smartwatches, sports watches and wristbands

- Notifications
- Bluetooth® audio streaming
- Voice recording and assistant
- Gesture control
- Location tracking
- Contactless payment, access control and ticketing
- Information visualization (maps, news, videos, etc.)
- Physical condition monitoring (cardiac condition, blood pressure, blood glucose monitoring)
- Health monitoring (heart rate, etc.)
- Sleep monitoring
- Body temperature monitoring
- Smartphone autonomy & broader mobile network accessability
- Fitness monitoring
- Speed monitoring
- Cloud authentication for safe data transfer and data privacy
- Car access control

Use cases today · Future use cases

Infineon the right partner to solve your design challenges

- Highest accuracy and fast signal pick-up for location tracking and altitude measurement
- Secure cellular network connection
- Products with smallest form factors enable high functional integration
- Integrated lowest power compute, BLE connectivity and most robust capacitive touch
- Bluetooth® audio streaming with BT / BLE Combo SoC
- Precise detection of single steps, body motions or fall events
- USB-C fast charging capability
- Lowest power, high reliability data storage
- Easy, convenient and secure data transmission by NFC
- Device protection to enable high user experience
- High reliability and data throughput with Wi-Fi / BT connectivity
- Low power consumption to increase battery lifetime

Wireless charging for consumer/industrial

Cost-effective and secure system solutions for consumer and industrial applications

Over the last years, wireless charging has gained more and more traction in the market and is expected to heavily influence our daily lives in the future. Infineon offers a broad portfolio of efficient, high-quality products and solutions to serve the key requirements of the dominant market standards: inductive (Qi (WPC)) and resonant (AirFuel). Whether a smartphone (e.g., at home or in the car), a handful of wearables, a power tool, a laptop, kitchen appliances or a service robot is being charged, Infineon's components and solutions help overcome a wide range of common wireless power transfer challenges for consumer and industrial wireless charging designs.
Wireless charging is a complex subject that requires in-depth system knowledge and expertise. Designers have to understand antennas and how they interact with surrounding structures. To successfully transfer power wirelessly, the power delivery has to be precisely controlled. By working closely with our experienced partners, we can help customers master all design challenges, including:

- Compatibility issues
- Safety issues
- Smart heat management
- Increasing efficiency and reducing charging times
- Preventing device and battery damage

Applications that benefit from wireless charging

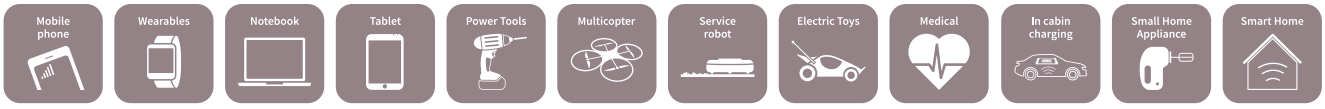

Infineon's key enabling products for consumer and industrial solutions

- Power MOSFETs – OptiMOS™, StrongIRFET™ and CoolMOS™
- Gate-driver ICs – EiceDRIVER™
- P-channel and N-channel small signal power MOSFETs
- 32-bit microcontrollers – XMC™, AURIX™, PSoC®
- Wireless power controllers (including softare IP) – XMC™-SC
- USB Type-C Port Controller
- Authentication - OPTIGA™ Trust Charge
- PSoC® 4 Bluetooth® Low Energy (Bluetooth® Smart)
- AIROC™ Bluetooth® LE & Bluetooth®
- PWM/flyback controllers and integrated power stage ICs – CoolSET™
- GaN HEMT – Gallium Nitride Transistor - CoolGaN™
- Voltage and buck regulators for component and bridge supply
- Reverse Conducting IGBTs R5/R6 - 650 V

For more details click on the product.

Key benefits when choosing Infineon

Faster time-to-market	Collaboration with partners	In-depth system expertise	Inductive and resonant	Quality
Powerful and cost-effective system solutions that ensure smart, secure, high performance wireless charging for a range of applications	Ready-to-go system solutions including software supported by our partner	We draw on our in-depth knowledge and expertise to help to solve wireless power challenges	Addressing both standards (inductive and resonant) with components or system solutions	We help you master your design challenges with leading silicon technology and upcoming new technologies

Inductive wireless charging for consumer and industrial

Example: >30 W inductive system solution

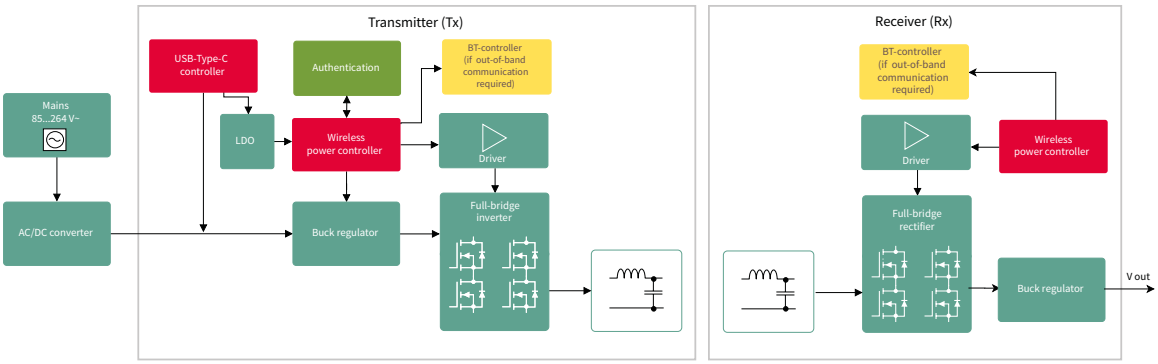

Key components for inductive designs for consumer and industrial

Wireless charging product portfolio for inductive	Sub-application	Products	
	MOSFETs*	30 V	BSC0996NS, BSC0993ND, BSZ0909NS, BSZ0909ND, BSZ0910ND, IRFHS8342
		40 V	BSZ097N04LS, BSZ063N4LS6, BSC035N04LSG, BSC072N04LD
		60 V	BSZ099N06LS5, BSZ065N06LS5, BSZ040N06LS5
		80 V	IRL80HS120
		100 V	IRL100HS121, BSZ146N10LS5, BSZ096N10LS5
	Driver IC	EiceDRIVER™, WCDSC006, PX3519, IRS2301S, 1EDN7512B, 1ED44173N01B, 1EDI60N12AF, 2EDN7524G, IRS2007M, 2ED2182S06F	
	Microcontroller or wireless power controller	XMC™, AURIX™ MCU and wireless power controller XMC™-SC (including software IP), PSoC® 4	
	Voltage regulators	TLE4296G V33, TLF50211EL, TLE8366EV	
	MCU + BLE Controller	PSoC® 4 Bluetooth® Low Energy (Bluetooth® Smart): CY8C4248LQI-BL573 (QFN)	
	AIROC™ Bluetooth® LE & Bluetooth®	CYW20719B2 / CYW20721B2	
	USB Type-C port controller	CYPD3120-40LQXIT, CYPD3171-24LQXQ, CYPM1011-24LQXI, CYPM1111-40LQXI, CYPM1211-40LQXI, CYPD3177-24LQXI	
	Small-signal MOSFETs	See the portfolio on our webpage small-signal MOSFETs	
	Authentication	SLS32AIA020Ux – OPTIGA™ Trust Charge (USON10 3 x 3 package)	
	Reverse conducting IGBTs R5/R6 - 650 V	Package TO-247 IHW30N65RS (30 A), IHW40N65R5 (40 A), IHW50N65R5 (50 A)	
	Reference designs and kits	REF_10WTX_QI_4102 - 15 W Qi transmitter for charging smartphones CY4532 EZ-PD™ CCG3PA Evaluation Kit CY4533 EZ-PD™ BCR Evaluation Kit CY7110 EZ-PD™ PMG1-S0 Prototyping Kit CY7111 EZ-PD™ PMG1-S1 Prototyping Kit CY7112 EZ-PD™ PMG1-S2 Prototyping Kit	

* Explore more MOSFET offerings at our webpage.

For more details on the product, click on the part number or contact our product support.

Key components for resonant designs for consumer and industrial

Wireless charging product portfolio for resonant	Sub-application	Products	
	MOSFETs**	30 V	IRLHS6376PBF, BSZ0909ND, BSZ0910ND, IRLML0030PBF
		40 V	IRLML0040
		60 V	IRLML0060
		80 V	IRL80HS120
		100 V	IRL100HS121
		150 V	BSZ900N15NS3, BSZ520N15NS3
		200 V	BSZ900N20NS3, BSZ22DN20NS3, BSZ12DN20NS3
		250 V	BSZ42DN25NS3
	Driver ICs	EiceDRIVER™ 2EDL71*, 1EDN7512, 2EDN7524, 2ED2182S06F, 2ED24427N01F, 1EDI60N12AF, 1ED44173N01B	
		EiceDRIVER™ ICs GaN 1EDS5663H, 1EDF5673F, 1EDF5673K	
	GaN e-mode HEMTs	CoolGaN™ 600 V e-mode GaN HEMT IGT60R190D1S (HDSOF-8-3)	
	Microcontroller	XMC™, AURIX™ MCU and wireless power controller XMC™-SC (including software IP), PSoC®4	
	MCU + BLE Controller	PSoC® 4 Bluetooth® Low Energy (Bluetooth® Smart): CY8C4248LQI-BL573 (QFN)	
	AIROC™ Bluetooth® LE & Bluetooth®	CYW20719B2 / CYW20721B2	
	USB Type-C port controller	CYPD3120-40LQXIT, CYPD3171-24LQXQ, CYPM1011-24LQXI, CYPM1111-40LQXI, CYPM1211-40LQXI, CYPD3177-24LQXI	
	Voltage regulators	TLE4296G V33, TLE4296G V50, TLE4296-2G V33, TLE4296-2G V50, TLF50211EL, TLE8366EV, TLE8366EV33, TLE8366EV50	
	Small signal MOSFETs	See the portfolio on our webpage small-signal MOSFETs	
	Reference designs and kits	› CY4532 EZ-PD™ CCG3PA Evaluation Kit › CY4533 EZ-PD™ BCR Evaluation Kit › CY7110 EZ-PD™ PMG1-S0 Prototyping Kit › CY7111 EZ-PD™ PMG1-S1 Prototyping Kit › CY7112 EZ-PD™ PMG1-S2 Prototyping Kit	

MOSFETs, driver IC, µCs are on the website

Are you searching for a turnkey solution for your application?

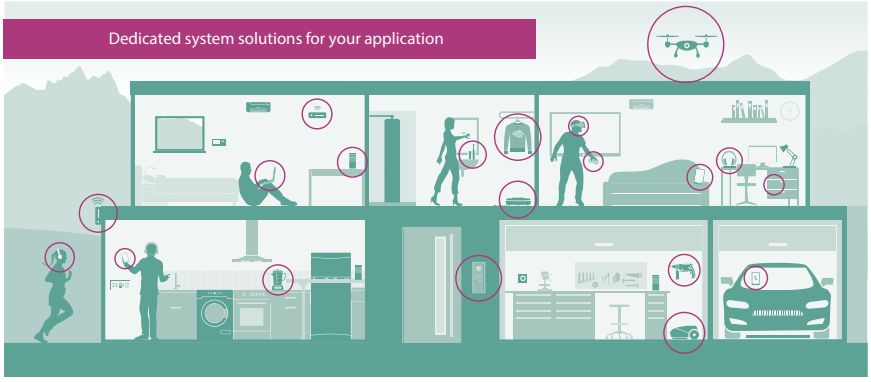

spark connected
Powering the world, wirelessly™

Spark Connected Inc. is our official partner for wireless charging. The software IP is provided by our partner.

Infineon, in collaboration with its partner, Spark Connected, offers customized turnkey wireless charging solutions up to 400 W for inductive and resonant topologies. For more information, please get in contact with us via infineon.com/support to get your customized system solution.

*coming soon
** Explore more MOSFET offerings at our webpage.

For more details on the product, click on the part number or contact our product support.

USB PD charger

USB-C charger

Best solutions for mobile charger

Modern mobile devices require a charger that provides faster charging but comes in a small size. High power density and cost-effective power supplies can be designed by operating the converter at a higher switching frequency to avoid a considerable increase in the transformer and the output capacitor size. In achieving the required thermal performance and EMI behavior, power devices with lower losses and controlled switching behavior enable effective and fast product development. To address these requirements, Infineon offers its CoolMOS™ P7 SJ MOSFET family for adapters and chargers. Special care has been taken to ensure very good thermal behavior, increased efficiency, meeting all EMI requirements and ease of design. In addition, power devices in IPAK/SMD packages enable optimal PCB layout through minimal footprint. SMD packages offer additional benefits for automatized large volume production. Specifically, Infineon's SOT-223 cost-effective package enables high power density at low manufacturing cost allowing SMT manufacturing to maintain very good thermal performances. Infineon's state-of-the-art XDP™ digital-based controllers enable the forced-frequency-resonant flyback, forced-quasi-resonant flyback, as well as hybrid flyback with zero-voltage-switching (ZVS) operation, ideal for high-power-density adapters and well support USB-PD (power delivery) requirements. In addition, the digital soft-switching controller, CoolMOS™ high-voltage MOSFETs, OptiMOS™ low-voltage MOSFETs and synchronous rectification IC and broad EZ-PD™ protocol controller portfolios enable high power density designs possible whilst meeting the thermal requirements. The EZ-PD™ CCG3PA-NFET is a highly integrated USB-C PD port controller for power adapters. It integrates NFET gate driver for VBUS and is compatible with the latest USB-C Power Delivery standard. In addition CCG3PA-NFET also supports legacy protocols including QC4.0, Apple 2.4 A charging, Samsung AFC and BC1.2 with no additional BOM.

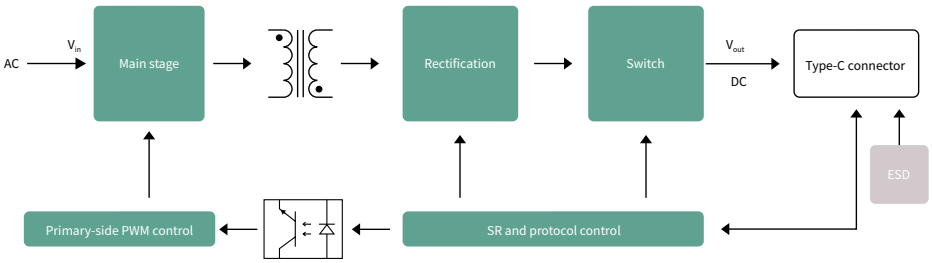

As the charger and adapter market has undergone a paradigm shift recently, and the original equipment manufacturers (OEMs) no longer sell the chargers/adapters together with the devices, the end-user demand for aftermarket supply has increased. It triggers multi-port (like 1A1C, 2C, etc.) designs from a technology point of view. The multi-port control with dynamic load sharing poses a new challenge for designers. Through its product offering, Infineon aims to help debunk the most efficient USB-PD designs and shorten time-to-market for its customers.

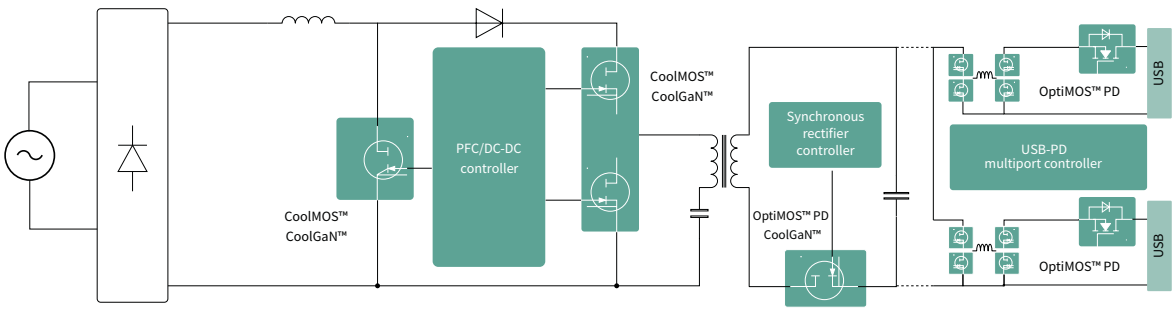

For more details on the product, click on the part number or contact our product support.

Recommended products

Functional block	Product category	Topology	Product family	Benefits
Flyback converter	High-voltage switch	Flyback	700 V CoolMOS™ P7 (standard grade)	› Best price competitive CoolMOS™ SJ MOSFET family › Lower switching losses versus standard MOSFET
		ACF, Hybrid flyback	600 V CoolMOS™ PFD7 (standard grade)	› Robustness and reliability with integrated robust fast body diode and up to 2 kV ESD protection › Reduced gate charge for enhanced light-load efficiency › Lower hysteresis loss
		Flyback	CoolGaN™ Integrated Power Stage (IPS) 600 V*	› Highest efficiency, highest power density › High reliability › Integrated isolated gate driver
	Control IC	FFR flyback IC	XDPS21071	› DCM operation with digital force-frequency resonant › Ideal for USB-PD
		FQR flyback IC	XDPS21081	› Optimization of low line AC input with force quasi resonant › Suitable for high power density design
		Hybrid flyback IC	XDPS2201	› Asymmetrical half-bridge ZVS control to maximize efficiency › Supports a wide range of configurable parameters › Supports ultra-high power density(20W/in³) design
		Quasi-resonant	PAG1P/S	› Secondary-side-controlled flyback solution › Cost-effective solution for USB-PD
	Gate-driver IC	Active-clamp flyback (ACF)	IRS25752L	› High-side gate driver enables active clamp mode operation › Cost-effective, 600 V, single-channel driver in SOT23 package
			IRS21271S	› High-side gate driver enables active clamp mode of operation › 600 V, single-channel driver with over-current protection (OCP)
Half-bridge	High-voltage MOSFETs	LLC	600 V CoolMOS™ P7	› Fast switching speed for improved efficiency › Reduced gate charge for enhanced light load efficiency › Optimized gate-to-source voltage (V_{GS}) threshold for lower turn-off losses
	High-voltage WBG	LLC/ACF/HBF	CoolGaN™ integrated power stage (IPS) half-bridge (HB) 600 V*	› Highest efficiency, highest power density › Isolated gate driver integrated
	PFC/LLC combo IC	LLC	IDP2308	› Digital multi-mode PFC and LLC combined controller with a floating high side driver and a startup cell › Comprehensive and configurable protection features › Wide set of configurable parameters
Synchronous rectification	Low-voltage MOSFETs	Synchronous rectification	OptiMOS™ PD 25 V – 150 V	› Low conduction losses and reduced overshoot › Logic level switching › S308/PQFN 3.3 x 3.3 package available
	Control IC	Synchronous rectification	IR1161LTRPBF	› High efficiency › Simple external circuitry
		SR/Protocol Combo	PAG1S	› Integration of synchronous rectification and PD controller › Configurable protection such as OTP, OCP, OVP, UVP, short circuit, etc.
Load switch	Low-voltage MOSFETs	Load switch	OptiMOS™ PD 25 V/30 V	› Low conduction losses › S308/PQFN 3.3 x 3.3 package available
Protocol control	USB ICs	Protocol controllers	PAG1S	› Supports USB PD2.0, PD 3.0 with PPS, QC4+, QC 4.0, QC 3.0, QC 2.0, Samsung AFC, Apple charging, and BC v1.2 charging protocols
		Protocol controllers	EZ-PD™ CCG3PA-NFET	› Supports USB PD3.0 with programmable power supply (PPS) › Independent constant current (CC) and constant voltage (CV) modes › Configurable OVP, OCP, and OTP › Integrates NFET gate driver to drive the load switch › 64 KB Flash memory

*Coming soon

For more details on the product, click on the part number or contact our product support.

SMPS

Diversify TV power supply with cost, performance, and ease of use

In addition to their outstanding image quality, new generation TVs gain attention for their user interface, low power consumption, and slim design. This requires the power supply unit (PSU) to either keep a low profile to maintain the slim appearance of a TV and a low thermal dissipation image or to have an external adapter. In addition, a growing number of TV manufacturers use external adapters to deliver DC power to the TV. Infineon products based on digital power technology have been designed to meet challenging efficiency and standby power requirements for the IoT-enabled TVs (both embedded PSU and adapter).

Thanks to digital power, our customers can reduce the number of TV power supplies by adapting the digital IC parameters to different TV and screen models by flexible and easy parameter-setting. Infineon's digital-based flyback controllers are ideal for low-power adapters for TVs and monitors. With digital soft switching, the adapter power density can significantly be improved.

The 600 V CoolMOS™ P7 series has been developed to cover a broad spectrum of different applications where excellent performance and perfect ease of use are required. The rugged body diode enables the use of hard-switching topologies, such as power factor correction (PFC), boost, and two-transistor forward (TTF) and resonant topologies such as LLC, where the technologies lead to high efficiency in both hard-switching and resonant circuits.

For higher on-state resistance ($R_{DS(on)}$) classes, there is a new feature of an integrated ESD diode that helps improve the quality in manufacturing. At the same time, the low $R_{DS(on)}$ and gate charge (Q_G) enable high efficiency in the various topologies. The 600 V CoolMOS™ P7 comes with a wide variety of $R_{DS(on)}$s and packages on consumer-grade to make it best suitable for TV power by balancing the cost and performance. Infineon developed specifically for TV power supplies a family of packages, characterized by short lead, SOT-223 mold stopper, and wide creepage distance, which enable low-cost and reliable manufacturing for our customers.

Non-AUX digital solution for large screen size

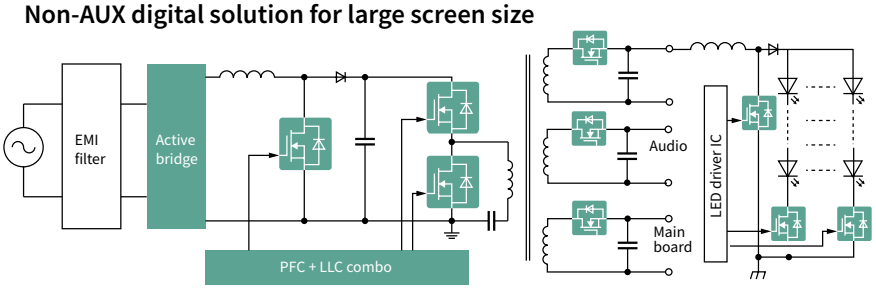

High-power solution for larger screen size

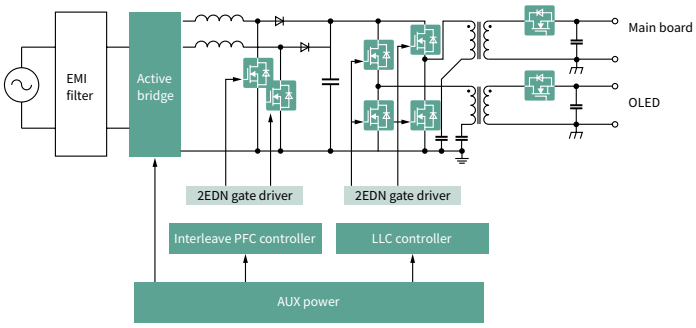

Flyback solution for small screen size

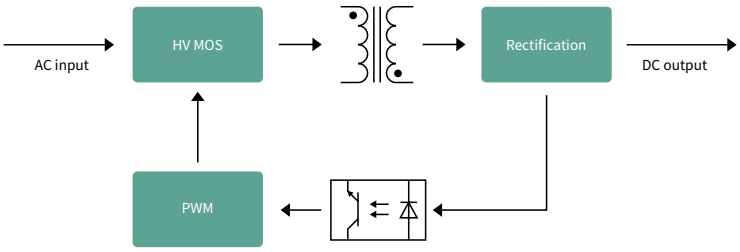

Recommended products

Functional block	Product category	Topology	Product family	Benefits
Main stage/PFC combo non-AUX	High-voltage MOSFETs	Active bridge	600 V CoolMOS™ S7	› Body diode robustness at AC line commutation › Improved thermal resistance › Absolute lowest $R_{DS(on)}$ in the market › Enables top-side cooling with DDPAK and QDPAK › Ideal fit for solid-state and hybrid relays and circuit breakers
			600 V CoolMOS™ P7	› Fast-switching speed for improved efficiency › Low gate charge for enhanced light-load efficiency and low power consumption at no-load condition › Optimized V_{GS} threshold for lower turn-off losses › Rugged body diode for HB LLC application
		DCM PFC, HB LLC	600 V CoolMOS™ PFD7	› Robustness and reliability with integrated robust, fast body diode and up to 2 kV ESD protection in gate › Reduced gate charge for enhanced light-load efficiency, and lower hysteresis loss
	Gate-driver IC	HB LLC	EiceDRIVER™ level-shift: 2ED2181S06F, 2ED21814S06J	› 650 V half-bridge SOI driver with integrated bootstrap diode › High-frequency switching (500 kHz)
	Control ICs	IDP2308	PFC-LLC non-AUX digital IC for TV embedded PSU	› Low BOM count/system cost due to high integration › Low standby power › High system reliability › Shorter development cycles and higher design and production flexibility
		IDP2303A	PFC-LLC non-AUX digital IC for TV adapter	› Low BOM count/system cost due to high integration › Low standby power › Small form factor designs › High system reliability
Synchronous rectification	Low-voltage MOSFETs	Synchronous rectification	OptiMOS™ 5 100-150 V	› Low conduction losses, reduced overshoot › FullPAK package available
	WBG	Synchronous rectification	CoolGaN™ 100 V e-mode HEMTs	› Highest efficiency contribution via less parasitic parameter › Space saving with SMD smaller package
PFC	Boost diodes	DCM PFC	650 V Rapid diode	› Low conduction losses
	Control ICs	CCM PFC ICs	ICE3PCS0xG	› High PFC and low THD
	WBG	PFC	CoolGaN™ 600 V e-mode HEMTs	› Highest efficiency contribution via less parasitic parameter › Space saving with SMD smaller package
	Gate-driver IC	PFC	1ED44173N01B	› Single-channel with fast, accurate (+/- 5%), integrated over-current protection (OCP)
Main stage	Control ICs	HB LLC ICs	ICE1HS01G-1/ICE2HS01G	› High efficiency and low EMI
	WBG	HB LLC	CoolGaN™ 600 V Integrated Power Stage	› Highest efficiency, Highest power density › High reliability › Isolated gate driver integrated
	High-voltage MOSFETs	HB LLC	600 V CoolMOS™ P7	› Fast-switching speed for improved efficiency › Low gate charge for enhanced light-load efficiency and low power consumption at no-load condition › Optimized V_{GS} threshold for lower turn-off losses › Rugged body diode for HB LLC application
Auxiliary power supply	Control ICs	QR/FF flyback CoolSET™	700 V/800 V– ICE5QRxx70/80A(Z)(G)	› Low standby power, high efficiency, and robustness
Flyback	Control ICs	Digital ZVS flyback	IDP21071	› Forced resonant ZVS control reduces the switching loss › Multilevel protection enables the robust design › Flexible firmware provides more differentiation for OEMs
	High-voltage MOSFETs	Flyback	700 V CoolMOS™ P7	› Optimized for flyback topologies › Best price competitive CoolMOS™ SJ MOSFET family › Lower switching losses versus standard MOSFET › Controlled dV/dt and di/dt for better EMI

For more details on the product, click on the part number or contact our product support.

OLED TV power block diagram

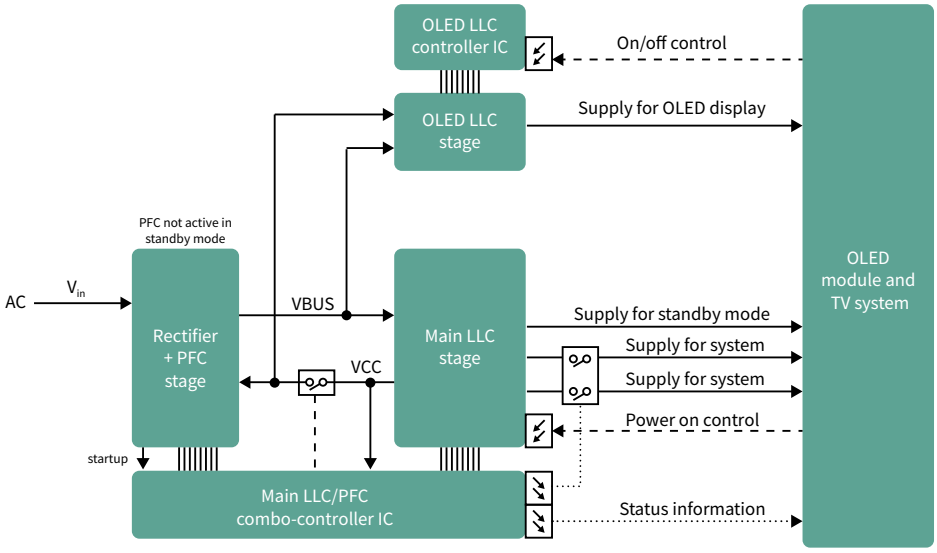

OLED TVs improve user experience as they can be thinner, lighter, more flexible, and consume less power than LCD/LED TVs. With the excellent performance of Infineon's GaN e-mode HEMTs, the OLED TV becomes even thinner and more reliable (for the full CoolGaN™ portfolio, see CoolGaN™ e-mode HEMTs).

Advanced system solutions for industrial applications

- Surveillance camera
- Power over Ethernet
- LED lighting
- Power and gardening tools
- Battery formation
- Energy storage systems
- Solar
- Relay replacement
- SMPS - embedded power supply
- SMPS - industrial SMPS

Surveillance camera

Make your surveillance camera IoT-ready

Advancements in video surveillance technology take indoor and outdoor security solutions to the next level. They help you protecting your building against undesired intruders and detecting unusual behaviors. Smart cameras that are connected to management systems and cloud platforms detect intruders more easily and alarm you in case of danger. By equipping surveillance and IP cameras with reliable and accurate sensors and connectivity solutions, safety-enhancing IoT features can be implemented, significantly improving detection of intrusion and other unusual behavior. Of course, cutting-edge camera technology needs to run reliably and efficiently to guarantee image capturing at all times while also reducing operating costs and needed bandwidth. Connected IP cameras often demand low-power with advanced thermal features.

Infineon offers a broad range of products to make surveillance cameras smart and connected. The connectivity solutions portfolio for Wi-Fi, Bluetooth® and USB offers stable connection to cloud and management systems. Sensors such as Infineon's XENSIV™ BGT60LTR11AIP radar sensors can help overcome bandwidth limitations, for example, by the waking-up function when motion near the camera is detected. At the same time, Infineon's embedded security solutions make connected surveillance cameras more robust against cyberattacks, while the highly efficient power MOSFETs allow for low power consumption and efficient operations.

Features and benefits

Key features	Key benefits
› Best-in class figures of merit	› Lower system power consumption and energy savings and enablement of deep sleep modes
› Reliable connectivity and power solutions	› Less failure and increased up-time with stable connectivity of surveillance camera to cloud and management platforms
› Co-processor in connectivity solutions	› Keep-alive feature in connectivity solutions
› Small footprints of components	› Sleeker designs and space savings
› Turnkey embedded security solutions	› More robust designs against cyberattacks in connected eco-systems
› Highly accurate set of sensors with low power consumption	› Accurate data collection for IoT use cases, e.g. wake-up functions with radar sensors

/surveillance

For more details on the product, click on the part number or contact our product support.

Application diagram

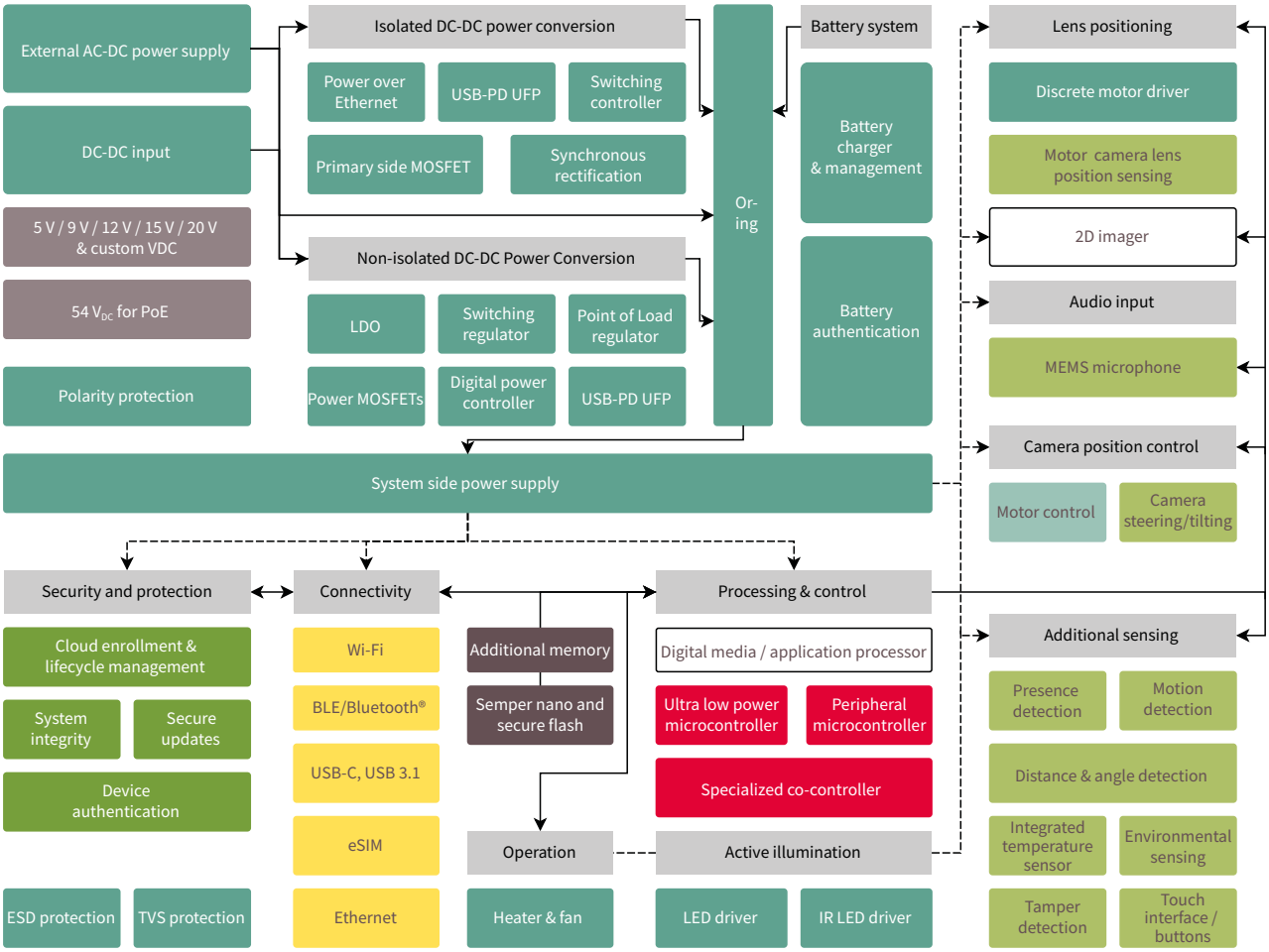

Power over Ethernet (PoE)

Designing reliable and power-efficient PoE power supplies

The latest IEEE 802.3bt standard for Power over Ethernet (PoE) not only increased the available power via PoE but also changed requirements for its power supply. Power sourcing equipment (PSE) now provides up to 100 W per port via a twisted pair of Ethernet cabling, whereas powered devices (PD) will have up to 71 W available. The adoption of this new PoE standard also largely depends on the capability to increase the power density on the PSE side while maintaining the same form factor as wide load conditions and higher power budgets change requirements. Infineon has long-standing expertise in switched-mode power supply (SMPS) designs and offers a highly reliable, rugged and efficient high-quality MOSFET portfolio for your PoE PSE and PD designs.

Powered devices

Powered devices (PD) include devices powered by PoE such as wireless access points, 5G small-cell radio units, IP cameras, conference systems, thin clients or public address systems. DC-DC SMPS designs need to be power efficient to maximize the available power for the PD itself with the simultaneous increase of power density. Moreover, PDs need to function reliably in the field even under potentially rough conditions for a long time.

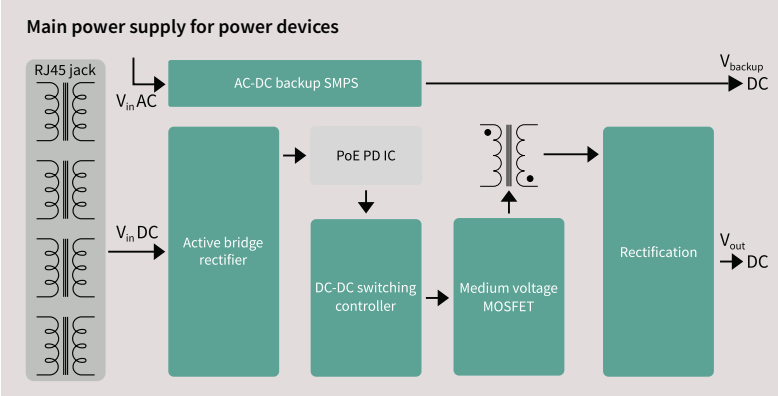

Power sourcing equipment

Power sourcing equipment (PSE) is any equipment that is able to provide and source power on the twisted pair Ethernet cable, such as PoE switches, PoE extenders and PoE injectors. PSE needs to be highly reliable to prevent device failure and ensure uninterruptible operations of connected power devices. With IEEE 802.3bt PoE, the power demand for PoE switches significantly increases with highest efficiency over wide load conditions. For example, to fully enable a switch with twenty-four 802.3bt compliant PoE ports, up to 2.4 kW of available PoE power budget is required. This makes modifications in AC-DC SMPS designs necessary to fulfill these requirements.

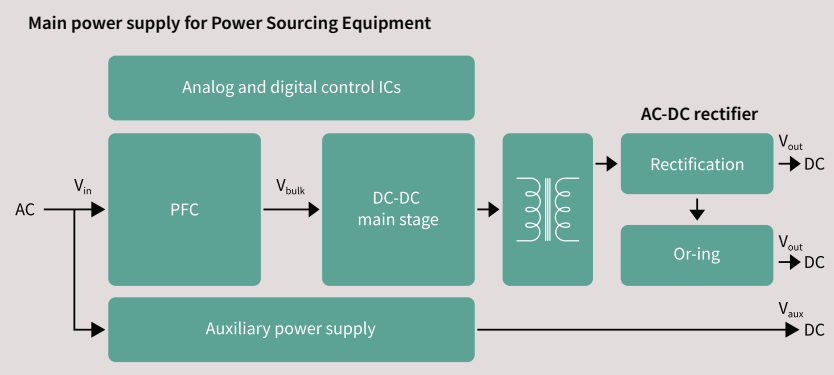

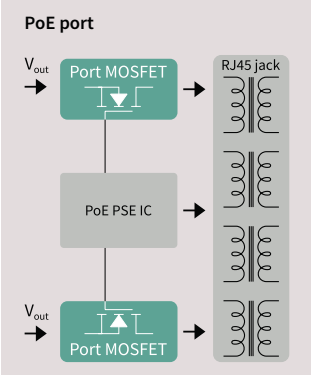

Recommended product portfolio for power sourcing equipment

Functional block	Product category	Topology	Product family	Benefits
PFC	High-voltage MOSFETs	DCM, CrCM, CCM,	600 V/650 V CoolMOS™ C7 600 V CoolMOS™ P7	› Best FOM $R_{DS(on)}$ *Q_G and $R_{DS(on)}$ *E_{oss} › Lowest $R_{DS(on)}$ per package › Lowest dependency of switching losses from $R_{g,ext}$ › Low turn-off losses, low Q_{oss}, and low Q_G
	Control ICs	DCM, CrCM, CCM	IRS2505L, ICE3PCS0xG, TDA4863G	› Simple external circuitry › High PFC and low THD
	High-voltage GaN	CCM totem-pole	CoolGaN™ 600 V	› Highest efficiency and highest power density
	GaN driver ICs	CCM totem-pole	1EDF5673Fx/1EDS5663H EiceDRIVER™	› Low driving impedance (on-resistance 0.85 Ω source, 0.35 Ω sink) › Input-output propagation delay accuracy: +/- 5 ns › Functional and reinforced isolation available
	SiC schottky diode	DCM, CrCM, CCM	CoolSiC™ Schottky diode 650 V G5/G6	› Low FOM V_F *Q_C
	Silicon power diode	DCM, CrCM, CCM	650 V Rapid 1/2 diodes	› Low conduction losses
DC-DC main stage	High-voltage MOSFETs	Flyback (ACF), HB LLC, FB LLC, ITTF, ZVS	600 V CoolMOS™ P7/C7/CFD7 650 V TRENCHSTOP™ F5	› Best FOM $R_{DS(on)}$ *Q_G and $R_{DS(on)}$ *E_{oss} › Lowest $R_{DS(on)}$ per package › Lowest dependency of switching losses from $R_{g,ext}$ › Low turn-off losses, low Q_{oss}, and low Q_G
	Low- and medium-voltage MOSFETs	Isolated DC-DC primary-side PWM	OptiMOS™ 60 V-200 V StrongIRFET™ 60 V-200 V Small signal MOSFETs 60 V-200 V	› Industry's lowest $R_{DS(on)}$ › Highest system efficiency and power density › Outstanding quality and reliability › Reduces the need for a snubber circuit
	Gate-driver ICs	-	EiceDRIVER™ 1EDNx/1EDi/2EDN7x/ 2EDLx/ 2EDFx/2EDSx	› Broadest portfolio in terms of isolation, channels, and protection
	Control ICs	HB LLC PWM-QF PWM-FF	ICE2HS01G ICE2QS03G/ICE5QSBG ICE5ASAG / ICE5GSAG	› High efficiency and low EMI
	High-voltage GaN	Flyback (ACF), HB LLC, FB LLC, ZVS	CoolGaN™ 600 V	› Highest efficiency and highest power density
	GaN driver ICs	-	EiceDRIVER™ 1EDF5673Fx/1EDS5663H	› Low driving impedance (on-resistance 0.85 Ω source, 0.35 Ω sink) › Input-output propagation delay accuracy: +/- 5 ns › Functional and reinforced isolation available
PFC-main stage combo	PFC control ICs	Boost PFC, HB LLC	IDP2308, IDP2303A	› Low BOM, high efficiency, and low standby power
	High-voltage MOSFETs	HB LLC	600 V CoolMOS™ P7	› Low turn-off losses, low Q_{oss}, and low Q_G › Fast-switching speed for improved efficiency and thermals
Rectification	Low- and medium-voltage MOSFETs	Synchronous rectification	OptiMOS™ 100 V-150 V OptiMOS™ 40 V-120 V StrongIRFET™ 40 V-100 V	› Industry's lowest $R_{DS(on)}$ › Highest system efficiency and power density › Outstanding quality and reliability › Reduces the need for a snubber circuit
	Gate-driver ICs	-	EiceDRIVER™ 1EDNx/1EDi/2EDN7x/ 2EDLx/2EDFx/2EDSx	› Broadest portfolio in terms of isolation, channels, and protection
	Control ICs	Synchronous rectification	IR1161L IR11688S	› High efficiency › Simple external circuitry
Or-ing	Low- and medium-voltage MOSFETs	Or-ing MOSFETs	OptiMOS™ 25 V-200 V	› Industry's lowest FOM ($R_{DS(on)}$ *Q_G) › Highest system efficiency and power density
Auxiliary power supply	AC-DC integrated power stage	Fixed frequency (FF) Quasi resonant (QR)	CoolSET™ ICE5xRxx80AG CoolSET™ ICE5QRxx80BG	› Quasi-resonant switching operation for high efficiency and low EMI signature › Fixed frequency switching operation for ease of design
Analog and digital control IC	32-bit XMC™ industrial microcontroller based on Arm® Cortex®-M	-	32-bit XMC1000 32-bit XMC4000	› Flexibility, HR PWM, digital communication › Arm® based standard MCU family and wide family
Port MOSFET	Medium-voltage MOSFETs	-	IR MOSFET™ 100 V OptiMOS™ 100 V	› Widest SOA quality and outstanding reliability › Lowest $R_{DS(on)}$

Recommended product portfolio for powered devices

Functional block	Product category	Topology	Product family	Benefits
Active bridge rectifier	Medium-voltage MOSFETs	Active bridge rectifier	OptiMOS™ 100 V-150 V IR MOSFET™ 100 V	› Industry's lowest $R_{DS(on)}$ › Highest system efficiency and power density
Rectification	Low- and medium-voltage MOSFETs	Synchronous rectification	OptiMOS™ 25 V-100 V OptiMOS™ 40 V IR MOSFET™ 20 V-100 V	› Industry's lowest $R_{DS(on)}$ › Highest system efficiency and power density › Outstanding quality and reliability
	Control ICs	Synchronous rectification	IR1161L and IR11688S	› High efficiency › Simple external circuitry
DC-DC switching stage	Medium-voltage MOSFETs	Flyback (ACF)	OptiMOS™ 100 V-150 V	› Low conduction losses, reduced overshoot › Logic level switching
AC-DC backup SMPS	High-voltage MOSFETs	Flyback (ACF)	600 V to 950 V CoolMOS™ P7	› Fast-switching speed for improved efficiency and thermals › Reduced gate charge for enhanced light load efficiency › Optimized gate-to-source voltage (V_{GS}) threshold for lower turn-off losses
	AC-DC integrated power stage	Fixed frequency (FF) Quasi resonant (QR)	CoolSET™ ICE5xR CoolSET™ ICE5QR	› Quasi-resonant switching operation for high efficiency and low EMI signatur › Fixed frequency switching operation for ease of design

For more details on the product, click on the part number or contact our product support.

LED lighting

Solutions for cost-sensitive applications as well as for smart lighting

Infineon supplies tailored products for LED drivers, LED strips, horticultural and smart lighting. Our broad portfolio of tailored products and solutions for LED lighting comprises LED driver ICs, MOSFETs, and microcontrollers suited for LED drivers as well as sensors and dedicated ICs for secure communication. In addition to offering products of proven quality, a competent global lighting team supports our lighting customers in designing LED lighting products and systems in collaboration with our channel partners.

Key trends and challenges in LED lighting and our offering:

- Human-centric lighting (HCL)
  - The lowest cost implementation of tunable white with single-stage flyback constant voltage and smart linear regulators with advanced headroom control ensuring high efficiency – BCR601
- Configuration of output current and some further parameters
  - Our NFC controller allows the configuration of the output current without the need for an additional microcontroller
  - Our XDPL lighting IC family allows, besides output current, also adjustment of other features like protection, dimming curves, etc.
- Cost reduction combined with efficiency increase
  - Integration of resonance inductor for PFC + resonant topology enables highest efficiency at low cost
  - Integration is enabled by the coreless transformer technology that enables high switching frequencies

LED drivers

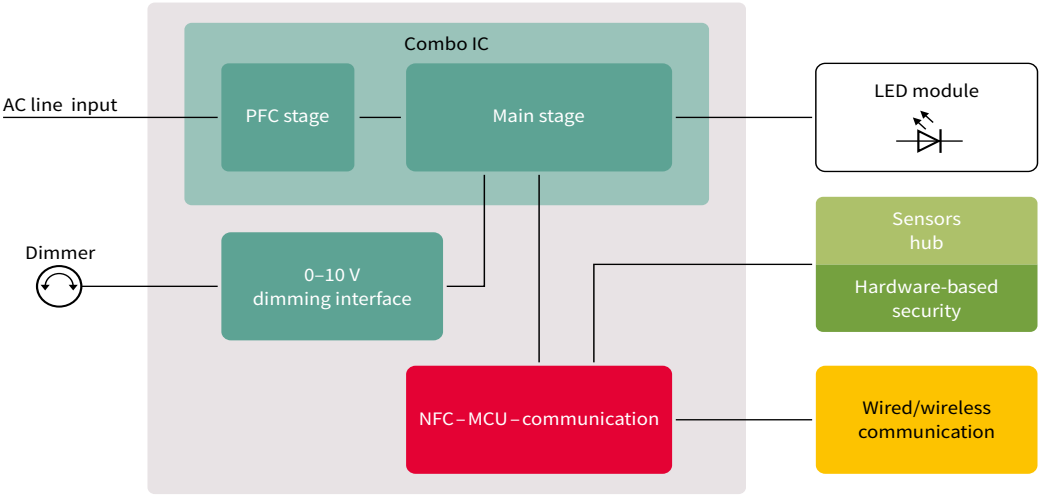

For more details on the product, click on the part number or contact our product support.

Recommended LED driver products

Functional block	Product type	Product family	MOSFET technology	Voltage class
PFC stage	PFC	IRS2505	CoolMOS™ P7	600 V/700 V/800 V/950 V[1]
Main stage	PFC + LCC (constant current) PFC + LLC (constant current)	ICL5102[2]	CoolMOS™ P7 (up to 600 m) CoolMOSTM PFD7	600 V/600V
			CoolMOS™ CE (above 600 m)	600 V
		ICL5102HV[4]	CoolMOS™ PFD7	950 V
	PFC + flyback (dual stage)	XDPL8221[2]	CoolMOS™ P7	800 V/950 V
	PFC/flyback (single-stage constant current)	XDPL8105	CoolMOS™ P7	800 V/950 V
	PFC/flyback (single-stage constant voltage)	XDPL8219	CoolMOS™ P7	800 V/950 V
	PFC/flyback (single-stage constant voltage)	ICL8800/ICL8810/ ICL8820	CoolMOS™ P7	800 V/950 V
	PFC, flyback low-side gate driver	1EDN7550B	any CoolMOS™ SJ MOSFETs	-
		2EDN8524F	any CoolMOS™ SJ MOSFETs	-
	Half-bridge LLC gate driver	2ED2101S06F	any CoolMOS™ SJ MOSFETs	650 V (SOI)
		1EDI20N12AF	any CoolMOS™ SJ MOSFETs	1200 V (coreless transformer/CT)
		2EDF7275F	any CoolMOS™ SJ MOSFETs	650 V (coreless transformer/CT)
Buck/linear solutions	Secondary buck (single-channel) Secondary buck (multichannel)	ILD8150	integrated	80 V
	High side buck gate driver	1EDB8275F	any CoolMOS™ SJ MOSFETs	650 V
	Low side buck gate driver	1EDN8511B	any CoolMOS™ SJ MOSFETs	-
	Secondary linear controller with feedback	BCR601	small-signal MOSFETs	75 V/100 V
	Tunable white with linear LED driver	BCR601, BCR602	small-signal MOSFETs	75 V/100 V
Synchronous rectification	Synchronous rectification controller	IR11688	OptiMOS™	100 V/150 V/200 V
Dimming	0-10 V dimming interface IC	CDM10 V	-	-
		CDM10 VD	-	-
NFC	NFC configuration IC	NLM0010/NLM0011*	-	-
Microcontroller	XMC™ microcontroller	XMC1100	-	-

LED driver with constant voltage output and linear/switch mode LED driver ICs

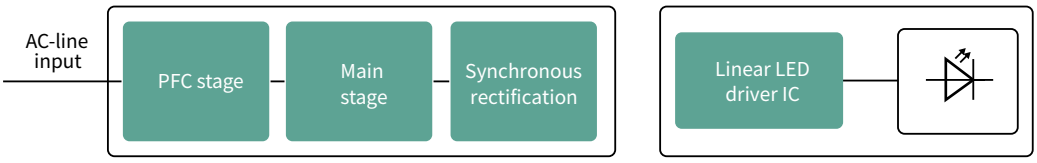

Linear LED driver IC product portfolio

Functional block	Topology	IC product family	MOSFET technology
Lowest cost LED driver IC	Linear	BCR400W series	Integrated
Low voltage drop LED driver IC		BCR430/BCR431	
Robust LED driver IC		BCR40xU/BCR42xU	

For additional portfolio, take a look at Lighting ICs.

1) 700 V, 800 V and 950 V CoolMOS™ P7 are optimized for PFC and flyback topologies. 600 V CoolMOS™ P7 is suitable for hard as well as so switching topologies (flyback, PFC and LLC)
2) PFC and resonant combo controllers
3) PFC and flyback combo controllers
4) Higher input voltage
* In addition to current configuration also constant lumen output (CLO) feature is included.

For more details on the product, click on the part number or contact our product support.

Plug & LEDs play solutions

Modular LED lighting reference designs for LLC, buck and PFC flyback topologies

LED lighting has become a mature technology with stringent requirements on light quality. In order to achieve high light quality, there is a strong trend towards two-stage topologies. These two-stage topologies ensure that the light flicker or also called light ripple remains at low levels according to the IEEE 1789 standard and other new upcoming regulations. Primary constant voltage output, followed by a DC-DC buck, enables dimming, efficiency, cost and scalability benefits. Infineon has solutions for both the primary AC-DC stage as well as for the secondary DC-DC buck stage. These solutions can be combined in a plug & play concept. In other words, depending on the requirements, the suitable AC-DC stage and the best fitting DC-DC stage can be selected and tested.

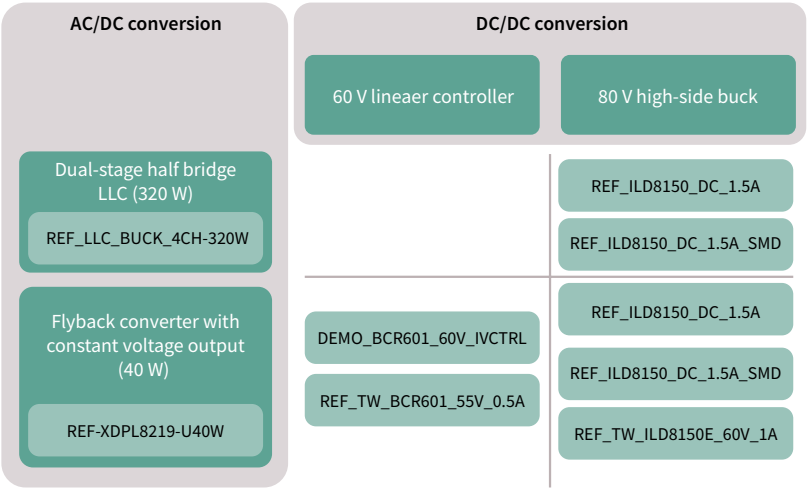

Our solutions include but not narrowed down to:

Low to medium power platform promising tunable white at low cost

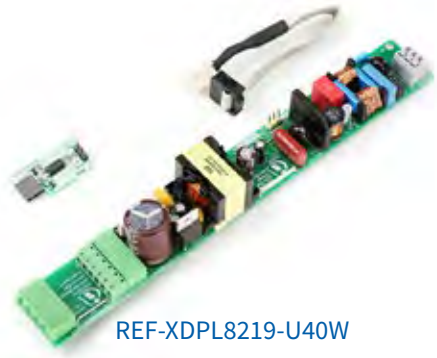

REF-XDPL8219-U40W

REF_TW_BCR601_55V_0.5A

320 W DCM PFC cost-effective and scalable platform design with up to 4 DC-DC channels

REF_LLC_BUCK_4CH_320W

REF_ILD8150_DC_1.5A

Discover more solutions on Infineon.com/leddriver-reference-solutions

For more details on the product, click on the part number or contact our product support.

Smart lighting solutions

Connectivity and sensor solutions for connected and smart lighting to facilitate everyday life

In the last few years, connected and smart lighting has gained high momentum in the lighting industry. In this application field, sensing and connectivity play an essential role. Besides helping to realize energy savings, they also enable new use cases that go beyond lighting controls.

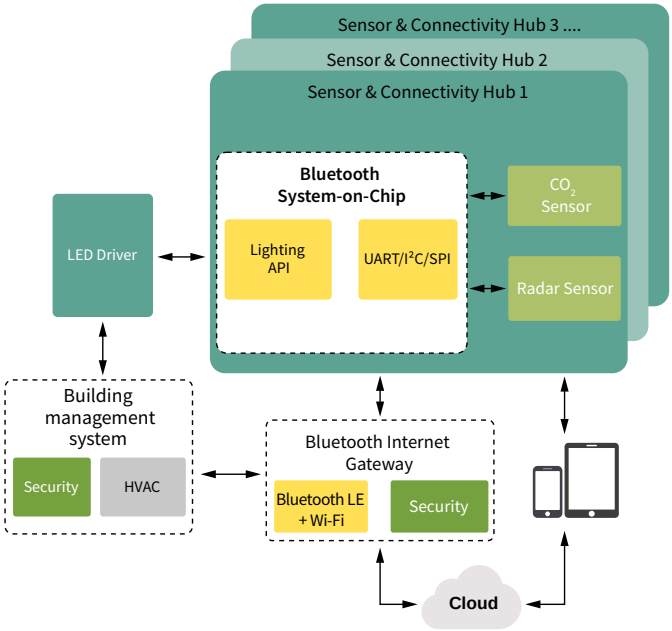

Radar sensor solutions

For energy saving, passive infrared (PIR) sensors are used. Novel sensors like radar can overcome weaknesses of PIR sensors like poor design, limited detection of micro-movements, and limited area coverage, to name a few. Radar sensors can be seamlessly integrated into the luminaires enabling nice design as well as platform design of luminaires since there is no need for drilling holes as in the case of PIR sensors. Advanced use cases like people counting and people tracking can also be ensured with radar technology. In order to add more intelligence into the entire system, connectivity is a key element.

Our partners:

Our system design house partners deliver both standard products and customized solutions to fit specific lighting applications from movement detection through automatic light activation to person counting. In addition, they offer all levels of support to get your intelligent lighting system up and running as quickly and efficiently as possible. See below a list of some of our partner solutions and check our Lighting brochure for more.

Functional block	Topology	IC product family
RF Beam	K-LD2	Presence detection including slight movements
	K-LD7	
InnoSent	INS-313x	Motion detection range up to 5m
	INS-333x	Motion detection range up to 10m
Novelic	RIOT100 – NRM302	Turnkey motion and presence sensor solution up to 15m

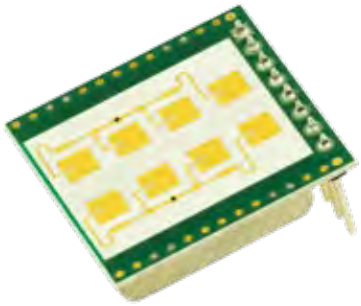

Additionally, Infineon provides numerous radar solutions.
Please find out more about them in Radar sensor ICs chapter.

Bluetooth® Mesh devices and modules for connected and smart lighting applications

Embedding Bluetooth® Mesh networking in lighting systems, including luminaires, fixtures, and wall switches, opens a range of system applications to manage lighting brightness or color, efficiency based on occupancy movements, and correlation of lighting ecosystem components. The range and coverage of Bluetooth® Mesh devices allow for low latency, whole building coverage of automation and occupancy interaction via smartphone and tablet applications, as well as cloud applications for building management. Infineon provides a range of Bluetooth® Mesh MCUs and certified modules that enable lighting control functionality, safety and occupancy sensor management and robust, secure, reliable networked managed solutions.

Bluetooth® Mesh SoCs and certified modules: solutions and benefits

Bluetooth® Mesh system-on-a-chip (SoCs) and certified modules offer a range of efficient and future-proof upgradeable solutions:

Solutions	Benefits
› Module diversity with integrated components ranging from the basic battery-powered sensor to the most sophisticated detection and safety devices	› Accommodating different needs now and in future
› Fully-integrated modules	› Accelerate time-to-market › Reducing development and manufacturing costs
› Ultra-high-transmit power designs with integrated antennas	› Enabling long range and unfailing node-node connections
› Integrated CPU, memory (flash and RAM) and I/O	› Suiting all foreseeable applications hosting

Bluetooth® Mesh evaluation kit CYBT-213043-MESH

The Bluetooth® Mesh evaluation kit (CYBT-213043-MESH) enables you to evaluate SIG Mesh functionality and features using the CYBT-213043-02 module. The CYBT-213043-02 module is an integrated, fully certified, 12.0 mm x 16.61 mm x 1.70 mm, programmable Bluetooth® Smart Ready module designed to reduce your time-to-market.

Utilized device: CYW20819

Kit contents:
4x mesh evaluation boards
4x USB A to micro-B cables
1x quick-start guide (this document)

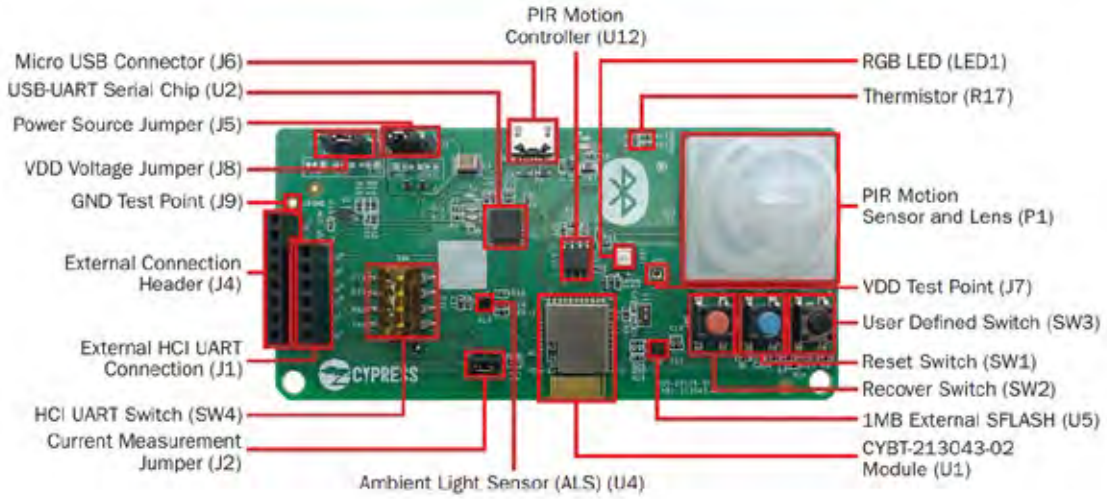

Info

Bluetooth® Mesh Networking - An Introduction for Developers
Bluetooth®-Mesh-Paving-the-Way-for-Smart-Lighting
Bluetooth®-Mesh specifications:
www.bluetooth.com/specifications/mesh-specifications

Getting Started with Bluetooth® Mesh
(AppNote AN227069)

For more details on the product, click on the part number or contact our product support.

Mesh-enabled, silicon, dual-mode Bluetooth® 5.0 MCUs

	CYW20706	CYW20735	CYW20819	CYW20820	CYW20719
Product features					
TBA Processor	CM3	CM4 w/ FPU	CM4	CM4	CM4 w/ FPU
TBA Radio	–	ULP RF	ULP RF	ULP RF	ULP RF
Operating temperature	105 C	85 C	125 C planned	125 C planned	85 C
Transmit power	10 dBm Tx	10 dBm Tx	4 dBm Tx	10 dBm Tx	4 dBm Tx
Memory	–	–	256 kB Flash	256 kB Flash	1 MB Flash

Features/Integration

Interested in more? We offer a broad silicon portfolio to support your Bluetooth® Mesh design. Explore here.

Fully-certified Bluetooth® modules (FCC, ISED, MIC, CE)

Load range
Up to 20 dBm transmit power

CYBT-483056-02

Size and simplicity
Ez Serial support enables fast time to market and 9x9 size for small form factor application

CYBT-353027-02

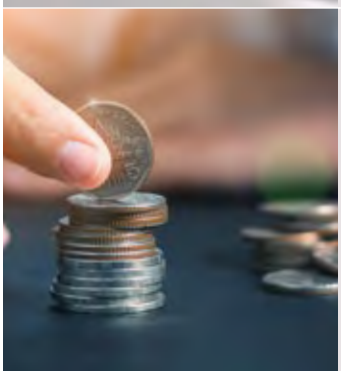

Value
Balance of features for cost sensitive applications

CYBT-343052-02

Integration
Fully integrated SoC with lowest power and extended range

CYBT-273063-02

For more details on the product, click on the part number or contact our product support.

Wi-Fi enterprise networking and internet connectivity

Wi-Fi networking is the back-bone of enterprise, retail, and home internet connectivity. Wi-Fi is the bridging medium for Bluetooth® Mesh networks to enterprise networks and cloud applications capturing messaging from across the lighting installation for secure enterprise building management applications. Wi-Fi can also be used to connect sensors and fixtures directly to enterprise or home access points for long range solutions or integrated solutions including security lighting and cameras. Infineon offers a range of secure, high performance enterprise ready Wi-Fi solutions that can be added to switches, panels, and lighting bays. These solutions can be stand-alone network nodes or offer Bluetooth® Mesh Gateway services bridging Mesh-networked devices to cloud applications.

IoT Wi-Fi portfolio

Technology	Wi-Fi	Wi-Fi + MCU	Wi-Fi + Bluetooth® combos
Wi-Fi 4 (802.11n)	CYW43364 SB 1x1 11n | SDIO		**CYW43439*** SB 1x1 11n + BT5.2 SDIO/SPI
	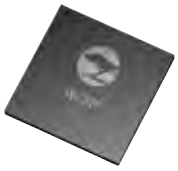	CYW43903 SB 1x1 11n + 160-MHz R4	CYW43012 ULP DB 1x1 11n + BT5.1 SDIO/SPI WLBGA/WLCSP
		CYW43907 1x1 DB 11n + 320-MHz R4	
Wi-Fi 5 (802.11ac)		CYW54907 1x1ac DB + 320-MHz R4	**CYW54590**** DB 2x2 11ac + BT 5.1 PCIe/SDIO
		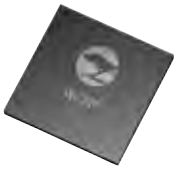	CYW4373/89373 DB 1x1 11ac + BT5.0 USB/SDIO/PCIe
			CYW54591 DB 2x2 11ac, RSDB, BT5.1 PCIe/SDIO

Infineon's Wi-Fi portfolio provides high-performance, flexible connectivity for Linux, Android, and RTOS. Many of the Wi-Fi + Bluetooth® combos are supported on Infineon's WICED Wi-Fi and ModusToolbox Software Development Kits (SDK) which provide code examples, tools and development support.

Infineon's Wi-Fi and Bluetooth® combos use production-ready, fully-certified Wi-Fi + Bluetooth® combo modules based on both Linux and RTOS based platforms. Many of the Wi-Fi + Bluetooth® combos are supported on Infineon's WICED Wi-Fi and ModusToolbox Software Development Kits (SDK) which provide code examples, tools and development support for **easier and faster development.**

*Coming soon
**For more information on this product, contact our product support.

For more details on the product, click on the part number or contact our product support.

Wi-Fi enterprise networking and internet connectivity

		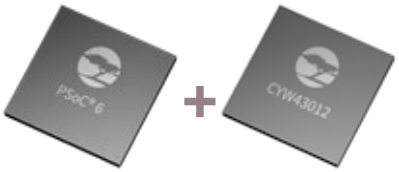
CYW43907: MCU + Wi-Fi	PSoC or 3rd party MCU: PSoC or 3rd-party MCU running RTOS 3rd-party SoC running Linux OS	P/N: CY8CKIT-06S2-43012 PSoC 6: Ultralow-power dual-core MCU
CYW20719: Dedicated Bluetooth® 5.1 MCU	CYW43439*: 1x1n Wi-Fi + Bluetooth® combo SoC	CYW43012 (Murata Type 1LV): Dedicated low-power Wi-Fi + Bluetooth® 5 combo SoC

We offer a broad platform portfolio to support your Bluetooth® Mesh gateway. Explore more here.

IoT Wi-Fi portfolio

A global Wi-Fi module partner ecosystem enables support and development for your IoT application.

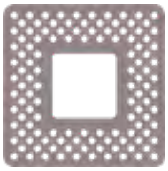

Design, build and sell RF Modules
with limited software and hardware
certification support

Module makers

muRata INNOVATOR IN ELECTRONICS AzureWave USI

*Coming soon

For more details on the product, click on the part number or contact our product support.

Power and gardening tools

Battery-powered home and professional applications

Infineon is bringing reliability and safety to consumer projects. Millions of households worldwide rely on power tools to complete daily tasks or creative projects around the home. Consumers want robust, reliable and portable power tools that are easy-to-use with low price and long battery life as key selection options. Battery-powered tools must also be equipped with diagnostic and safety features to ensure confidence with high quality.

Infineon's broad portfolio offers best-fit, innovative solutions for all power tools applications. We help you meet each consumer need and reduce your overall costs. Also, our wireless-charging reference designs deliver high performance and are easily optimized in our DAVE™ development platform. Configure your BOM and exceed expectations with Infineon components in your cordless power tool designs.

Features and benefits

Key features	Key benefits
› Comprehensive portfolio of products and solutions, easy to tailor to design specification	› Convenient selection of the right fit products thanks to broad portfolio and complete solutions
› Infineon offers complete solutions for power supplies, chargers and motor drives	› Extended battery lifetime and product life span
› Best-in-class EiceDRIVER™ level-shift driver for OptiMOS™ and HEXFET™/StrongIRFET™, offering high efficiency and protection	› Productive capability
› High reliability of Infineon components	› Overall system size and cost reduction
› Offering LV FETs with SMD packaging improves the productive capability by automatic production, improves reliability and reduces assembly cost	› Security, quality, and safety
› Components featuring small form factor and compact design offering highest power density and BOM savings thanks to lowest $R_{DS(on)}$	› Authentication
› Trustworthy hardware-based security	› Short time to market
› Highest quality standards and a safety-certified development process	
› Proven track record and outstanding partner network for embedded security	
› OPTIGA™ Trust enables authentication of components connected to the system (e.g., battery pack recognition to avoid second-party batteries etc.)	
› Evaluation and demonstration boards for fast prototyping	
› Available simulations, documentation, and system support to reduce development time and cost	

Application block diagram example: cordless power tools

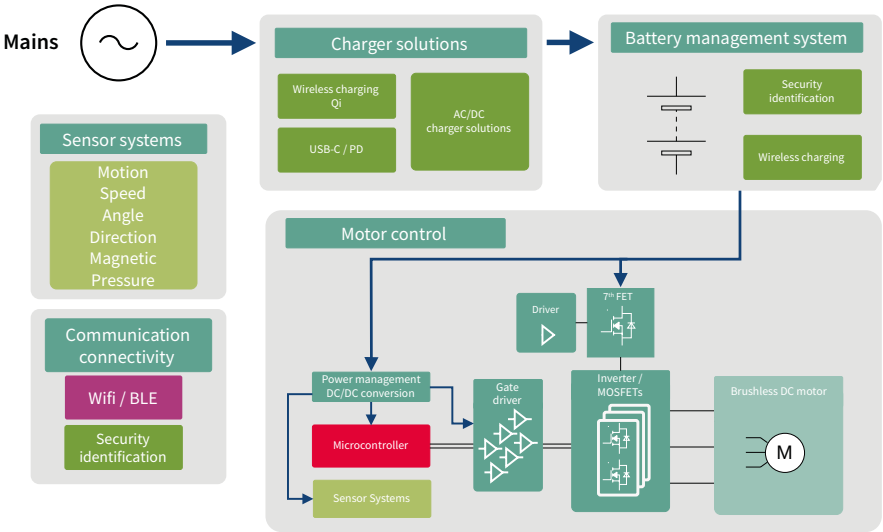

Infineon product offering		Home and professional applications
Supply voltage		10.8-56 V
OptiMOS™ and HEXFET™/StrongIRFET™ power MOSFETs	**Voltage**	20-150 V
	Package	SuperSO8, PQFN 3x3, DirectFET™ S/M/L-Can, TOLL, TO-220, TO-247, DPAK, D^2PAK, D^2PAK 7-pin
CoolMOS™ P7 SJ MOSFET *	**Voltage**	600-700 V
TRENCHSTOP™ 7 T7	**Voltage**	650 V
Gate-driver ICs		EiceDRIVER™ 1EDN/2EDN, 1ED44173N01B, 6EDL04N02PR, 6ED003L02-F2, 6EDL04N06PT, 2EDL05N06PF, 2ED2304S06F, IRS2005S, IRS2007S, IRS2008S, IRS2301STRPBF, IRS21867STRPBF Integrated: IFX9201SG/ BTN8982
IPM – CIPOS™ Nano		IRSM005-800MH, IRSM005-301MH
Authentication IC, security		OPTIGA™ Trust B, OPTIGA™ Trust M
XMC™ microcontrollers **iMotion™** **Embedded Power ICs** **PSoC family**		XMC1300, XMC4400/XMC4500, iMOTION™ IRMCK099M Embedded Power IC TLE987x family (BLDC) PSoC4, PSoC6
Microcontroller and driver supply: linear voltage and DC-DC switching regulators		IFX1763/IFX54441/IFX54211/IFX30081/IFX90121/IFX91041
CAN transceivers		IFX1050, IFX1051
Sensors		Hall switches (TLE496X *), Angle sensor (TLI5012B), 3D magnetic sensor (TLV493D), pressure sensor DPS368
USB-C		CCG7D Dual Port USB, PAG1P+S chipsets

*For more information on the product, contact our product support

For more details on the product, click on the part number or contact our product support.

Battery formation

Battery formation

Solutions that make battery formation equipment more accurate and efficient

Everyday routine is increasingly pervaded by a growing number of wireless and battery-powered devices – electric vehicles (EVs) amongst them. This trend further drives a steadily rising demand for the production of batteries with different charging capacities. Consequently, battery manufacturers find themselves confronted with the challenge of increasing efficiency throughout their production and meeting the required volume.

The essential stage every battery needs to undergo in the manufacturing process is battery formation. In it, the newly assembled batteries are initially charged and discharged with high voltage and current accuracy to activate the battery material. Formation cycling has a great impact on battery lifetime, quality and cost, but is currently the bottleneck in the production process as it is expensive and time-consuming.

With its comprehensive product portfolio of cost- and efficiency-optimized products, Infineon offers full-spectrum power system solutions and adequately addresses the application requirements of high accuracy, efficiency, and power density.

Features and benefits

Key features	Key benefits
› High voltage and current accuracy (up to 0.01%) during charge and discharge cycles	› Highly efficient, innovative and cost-attractive solutions leading to overall BOM savings enabling size reduction
› High power density	› High power density semiconductors
› High efficiency	Fast time to market due to the complete ecosystem: › Simulations › Documentation › Demonstration boards
› Optimal thermal management during operation	› Increased lifetime and reliability due to Infineon's quality
› High system reliability due to 24/7 operation cycles	› One-stop-shop portfolio

Application diagram

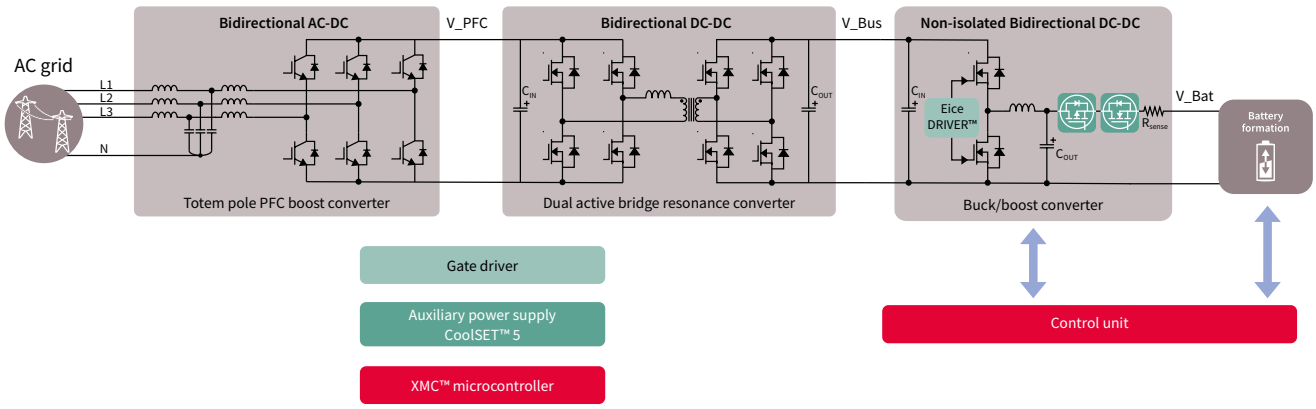

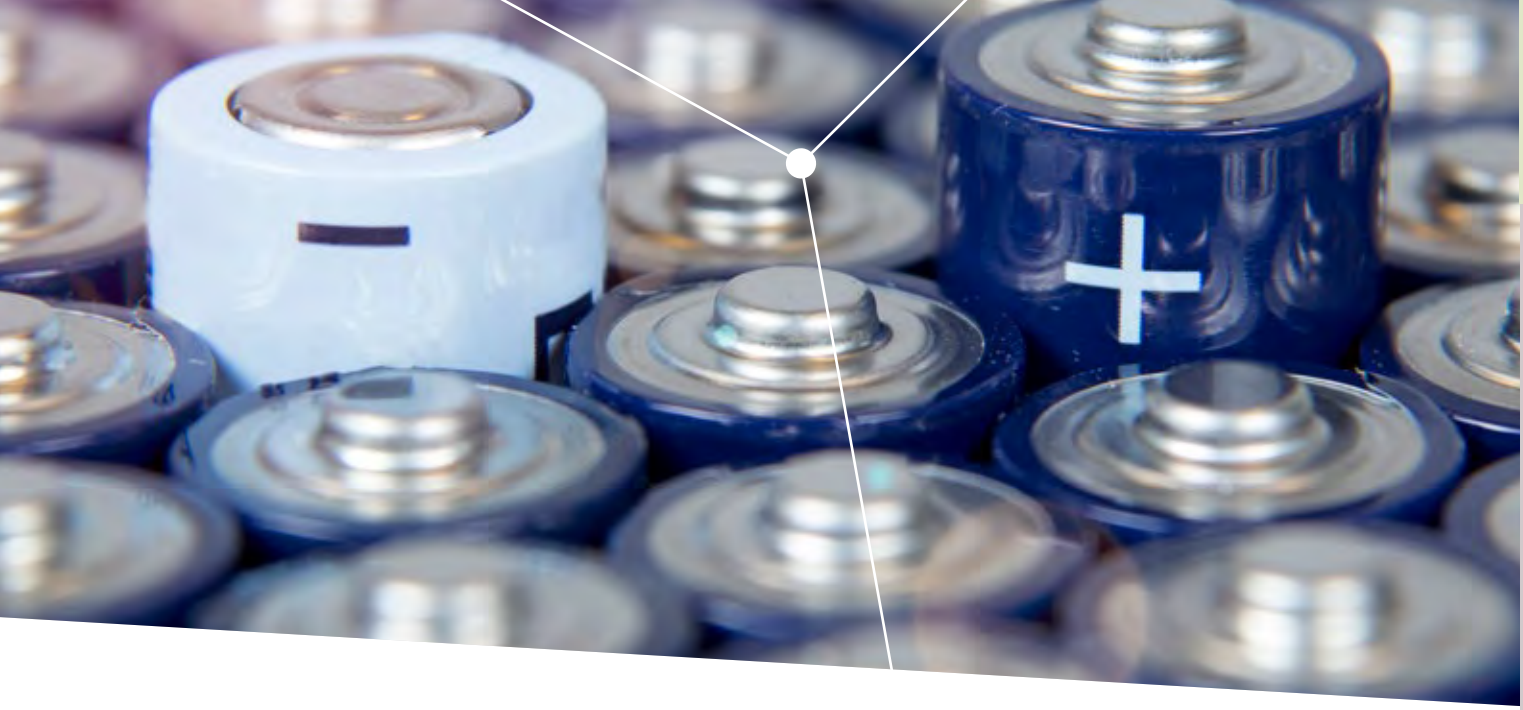

Highlight/ recommended product portfolio

Functional block	Product category	Topology	Product family	Benefits
Bi-directional AC-DC – PFC	CoolMOS™ MOSFET	600 V and 650 V	TO-247	› Best-in-class Q_{rr} and t_{rr} level › Significantly reduced Q_G › Improved efficiency over previous CoolMOS™ fast body diode series
	CoolSiC™ MOSFET	650 V and 1200 V	TO-247	› Low Q_{rr} and Q_g › Ease of implementation of bi-directional topologies › Ruggedness
	TRENCHSTOP™ 7 IGBT	650 V	TO-247	› Best-in-class efficiency, resulting in lower junction and case temperature leading to higher device reliability › Higher power density designs
	TRENCHSTOP™ 7 IGBT	1200 V	TO-247	› S7 series has the lowest conduction losses with full rated, robust freewheeling diode
	EiceDRIVER™ level shift gate-driver ICs	650 V	2ED2184S06F in DSO-8	› Integrated bootstrap diode using Infineon SOI technology › Low-level shift loss › Excellent ruggedness against negative transient voltages on V_S pin
	EiceDRIVER™ compact gate-driver ICs	1200 V and 2300 V	1ED-AF; 1ED-MF; 1ED31xx in DSO-8	› Up to 14 A driving capability and short prop delay for fast switching › Separate output or Miller clamp for better efficiency and protection › Best in class noise immunity
Bi-directional isolated DC-DC	CoolMOS™ MOSFET	600 V and 650 V	TO-247, D^2PAK	› Best-in-class Q_{rr} and t_{rr} level › Significantly reduced Q_G previous CoolMOS™ fast body diode series › Improved efficiency over
	CoolSiC™ MOSFET	650 V and 1200 V	TO-247	› Combination of high performance, high reliability, and ease of use
	TRENCHSTOP™ 7 IGBT	650 V	TO-247	› Best-in-class efficiency, resulting in lower junction and case temperature leading to higher device reliability › Higher power density designs
	OptiMOS™ MOSFET	60 V – 150 V	BSC012N06NS/ BSC021N08NS5/ BSC027N10NS5, IPT007N06N/ IPT010N08NM5/ IPT015N15N5, IPB010N06N/ IPB017N08N5/ IPB017N10N5	› Lowest $R_{DS(on)}$ switching frequency › Ideal for high › Increased power density › Reduced system cost › Less paralleling
	EiceDRIVER™ compact gate-driver ICs	1200 V and 2300 V	1ED-AF; 1ED-MF; 1ED31xx in DSO-8	› Up to 14 A driving capability and short prop delay for fast switching › Separate output or Miller clamp for better efficiency and protection › Best in class noise immunity
Bi-directional non-isolated DC-DC	OptiMOS™ MOSFET	25 V – 60 V	IQE006NE2LM5 / IQE013N04LM6 / BSC004NE2LS5 / BSC005N03LS5I / BSC007N04LS6	› Very low on-resistance › Superior thermal management › Space saving › Higher efficiency
	OptiMOS™ power block 5x6	25 V	BSG0811NDI / BSG0810NDI / BSG0813NDI	› Integrated solution with low-side and high-side MOSFET › Space reduction › Minimized loop inductance › Higher efficiency
	EiceDRIVER™ gate-driver ICs	Low-side with truly differential input (TDI)	1EDNx550 in PG-SOT23-6	› Control inputs independent from gate driver GND › Fast Miller plateau transition › Robust against false MOSFET triggering › Increased power density and BOM savings
		Functional level shift	2EDL in QFN package	› Level-shift high and low side dual-channel driver › Strong source and sink current capability › 120 V on-chip bootstrap diode › Fast propagation delay

For more details on the product, click on the part number or contact our product support.

Battery

Energy storage systems

Make energy storage systems the backbone of the new energy era with our semiconductor system solutions

Facing diminishing fossil reserves, the world nonetheless needs to manage the rising demand for electrical energy while meeting the growing call for urgent climate action. The transition to renewable energies has become inevitable.

Energy storage systems play a vital role in managing this transition successfully. Our system solutions help make energy storage the backbone of the new energy era. Our unique application expertise and comprehensive offering make us the natural choice to advance energy storage solutions in efficiency, performance, optimal cost, and innovation.

Features and benefits

Key features	Key benefits
› Efficient power conversion in DC-DC and AC-DC stage	› Improvement of system performance with industry leading semiconductor offering such as OptiMOS™, CoolMOS™, CoolSiC™ MOSFETs but also best-in-class modules and matching EiceDRIVER™ gate drivers
› Power dense design	› Reduction of design efforts and faster time to market
› Bi-directional power flow	› Trust in a true partnership during the whole system lifetime
› Safe operation of Li-ion battery	› Full system provider form power conversion stage (PCS) to the battery management system (BMS)
› Long battery lifetime	

Application diagram

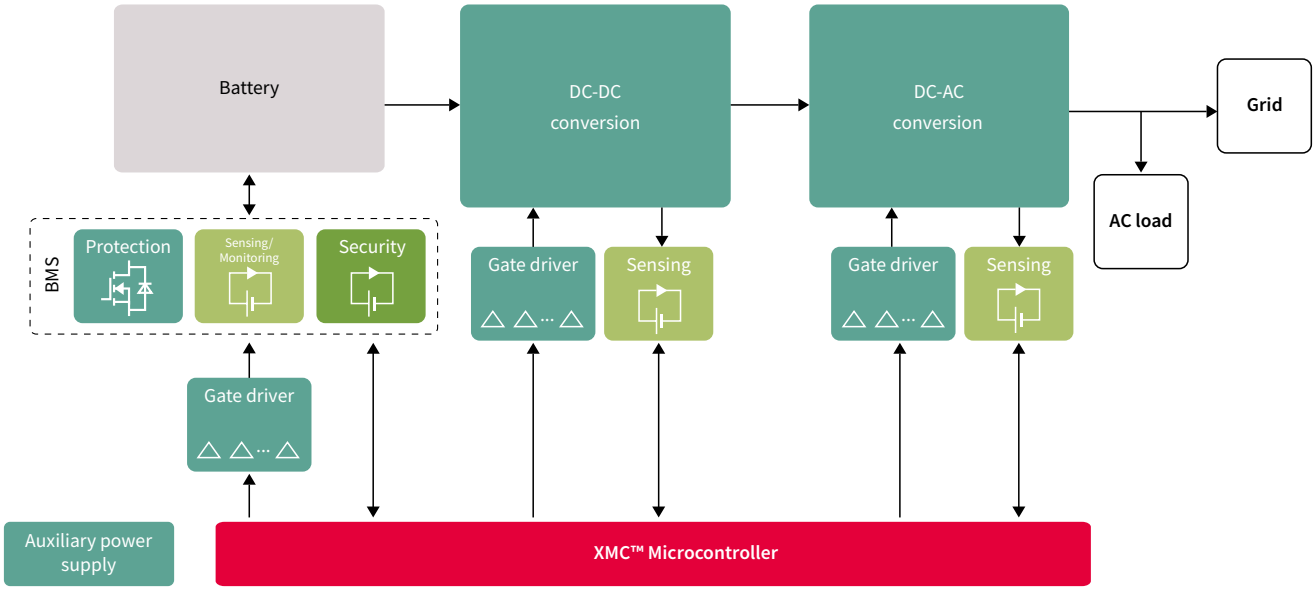

For more details on the product, click on the part number or contact our product support.

Highlight/recommended product portfolio

Functional block	Power/battery voltage	Voltage class [V_{DS} max]	Product family	Package	Benefits
Power conversion systems (PCS)	< 10 kW	150 V	BSC074N15NS5, IPT059N15N3	SuperSO8, TOLL	› High power density and system cost reduction
		600 V/650 V	CoolMOS™ CFD7/S7	TO-220/247, ThinPAK 8x8, TOLL	› Highest efficiency, enabling increased power density / more compact and easier design
		600 V	CoolSiC™ Schottky diode G6	TO-220	› Improved system efficiency and extremely fast switching
		650 V	CoolSiC™ MOSFET	TO-247	› Combination of high performance, high reliability and ease of use
	10-100 kW	150 V	OptiMOS™	TO-263	› High power density and system cost reduction
		600 V	CoolMOS™ C7/P7	TO-247	› Ease of use and fast design-in
		650 V	CoolSiC™ MOSFET	TO-247	› Combination of high performance, high reliability and ease of use
		650 V	TRENCHSTOP™ 5 H5	TO-247	› Benefit increase at high current conditions
		650 V	CoolSiC™ Schottky diode C6	TO-220	› Higher frequency and increased power density
		1200 V	CoolSiC™ MOSFET	TO-247	› Highest efficiency and increased power density
		1200 V	TRENCHSTOP™ 5/6 or S6	TO-247	› High device reliability and lifetime expectancy
	101-250 kW	150 V	IPB048N15N5	D^2PAK	› Enables and simplifies the setup of 2nd life batteries › Lower switching voltage enables higher inverter efficiency
		200 V	IPB107N20N3 G	D^2PAK	› Enables and simplifies the setup of 2nd life batteries › Lower switching voltage enables higher inverter efficiency
		1200 V	EasyPACK™ 2B	Modules	› Highest efficiency for reduced cooling effort
		1700 V	PrimePACK™/EconoDUAL™	Modules	› High power density › Easy and most reliable assembly
	> 0.25 MW	1200 V	PrimePACK™/EconoDUAL™	Modules	
		1700 V	PrimePACK™/EconoDUAL™	Modules	
	Gate driver	20 V	EiceDRIVER™ 1EDN	PG-SOT23-6	› Single-channel non-isolated
		25 V	1ED44175N01B / 1ED44173N01B	PG-SOT23-6	› Single-channel with fast, accurate (+/- 5%), integrated over-current protection (OCP)
		24 V	2ED24427N01F	PG-DSO8 with power-pad	› Dual-channel, 10 A low-side gate driver › Integrated undervoltage lockout (UVLO) protection and enable (EN) function › High frequency, high power operation with BOM savings
		650 V	EiceDRIVER™ 2EDS	PG-DSO-16-NB	› Dual-channel reinforced (safe) isolated
		650 V	EiceDRIVER™ 2EDF	PG-DSO-16-NB	› Dual-channel functional isolated
		650 V	2ED2181S06F 2ED21814S06J	DSO-8 DSO-14	› Integrated bootstrap diode › Superior $-V_S$ transient voltage immunity › High-frequency switching (500 kHz)
		600 V	IRS2186S/ IRS21864S	DSO-8 / DSO-14	› 4 A/4 A high- and low-side gate driver
		600 V / 1200 V	IR2114SS / IR2214SS	SSOP-24	› Half-bridge gate driver with DESAT, 2L SRC, soft-SD
		1200 V	IR2213S	DSO-28	› High- and low-side gate driver
		1200 V/2300 V	EiceDRIVER™ compact (1ED31xx)	DSO-8	› Single-channel isolated driver with Miller clamp/sep-out
		1200 V/2300 V	EiceDRIVER™ enhanced (1ED34xx)	DSO-16	› Single-channel isolated driver with DESAT and Miller clamp
BMS – battery protection	40-60 V	100 V	IPT007N06N,IRF40SC240 / IPB010N06N	TOLL, D^2PAK	› Highest system efficiency › Minimize parallelization of MOSFETs › Market-leading MOSFETS with lowest $R_{DS(on)}$ enabling low conduction losses › Widest SOA area with LinearFET™
	60-100 V	150 V	IPT010N08N5/IPT015N10N5 IPB017N08N5/IPB020N10N5LF	TOLL, D^2PAK	
	100-150 V	200-300 V	IPB020N10N5LF/IPB048N15N5LF	D^2PAK	
	150-400 V	600 V	CoolMOS™ S7	TO-247	› Lowest $R_{DS(on)}$ MOSFET

For more details on the product, click on the part number or contact our product support.

Solar

High efficiency designs for solar power systems

Infineon provides a comprehensive portfolio to deliver the best efficiency and reliability for solar applications. Cutting-edge technologies such as CoolMOS™ SJ MOSFETs, HighSpeed 3 IGBT and TRENCHSTOP™ 5, CoolSiC™ Schottky diodes, CoolSiC™ MOSFETs, coreless transformers, drivers and many more combined with the rich experience and highest quality ensure Infineon's unique supplier position for solar applications. The newly added Arm® Cortex™-M4 based MCU enables easy and high-efficiency design.

	Optimizer 250 W-750 W	Single and multiple panel micro inverter 250 W-1500 W	String inverter 1 kW-200 kW	Central inverter 500 kW-5000 kW
MOSFETs	OptiMOS™ SuperSO8/DirectFET™ | 60 V-150 V	OptiMOS™ SuperSO8 | DirectFET™ 60 V-200 V	OptiMOS™ 150 V-300 V	
		CoolMOS™ TOLL/D²PAK | 600 V-800 V	CoolMOS™ TO-247-3/TO-247-4 | 600/650 V	
SiC MOSFETs			CoolSiC™ MOSFET TO-247-3/TO-247-4 | 1200 V	
IGBTs			650 V TRENCHSTOP™ 5 / 1200 V HighSpeed 3 TO-247-3/TO-247-4/TO-247PLUS | 600 V/650 V/1200 V	
			Easy 1B/2B	PrimePACK™ / EconoDUAL™ 3 / 62 mm
Gate driver ICs	EiceDRIVER™ 2EDi / 1ED Compact (1ED-AF) / 650 V SOI / 1EDB / IRS2011	EiceDRIVER™ 2EDi / 1EDB / 1ED Compact(1ED-AF) / 650 V SOI / 1EDB	EiceDRIVER™ 2EDi/650 V SOI/ X3 Compact(1ED31xx) / X3 Analog(1ED34xx) / 1ED-F2 / 1EDB / IRS2011	EiceDRIVER™ X3 Compact(1ED31xx) / X3 Analog(1ED34xx) / 1ED-F2 / 1EDB 2ED24427N01F / 650 V SOI
SiC diodes		CoolSiC™ Schottky diodes DPAK/TO-220 | 600 V/1200 V D²PAK | 650 V	CoolSiC™ Schottky diodes TO-220/TO-247/TO-247-2/DPAK/D²PAK| 650 V/1200 V	
			BAT165 Schottky diode	
Auxiliary power supply			CoolSET™ 800 V	
Microcontrollers	XMC1xxx Arm® Cortex®-M0	XMC1xxx Arm® Cortex®-M0	XMC1xxx Arm® Cortex®-M0	XMC1xxx Arm® Cortex®-M0
	XMC45xx Arm® Cortex®-M4	XMC45xx Arm® Cortex®-M4	XMC45xx Arm® Cortex®-M4	XMC45xx Arm® Cortex®-M4

Infineon's products for complete solar system

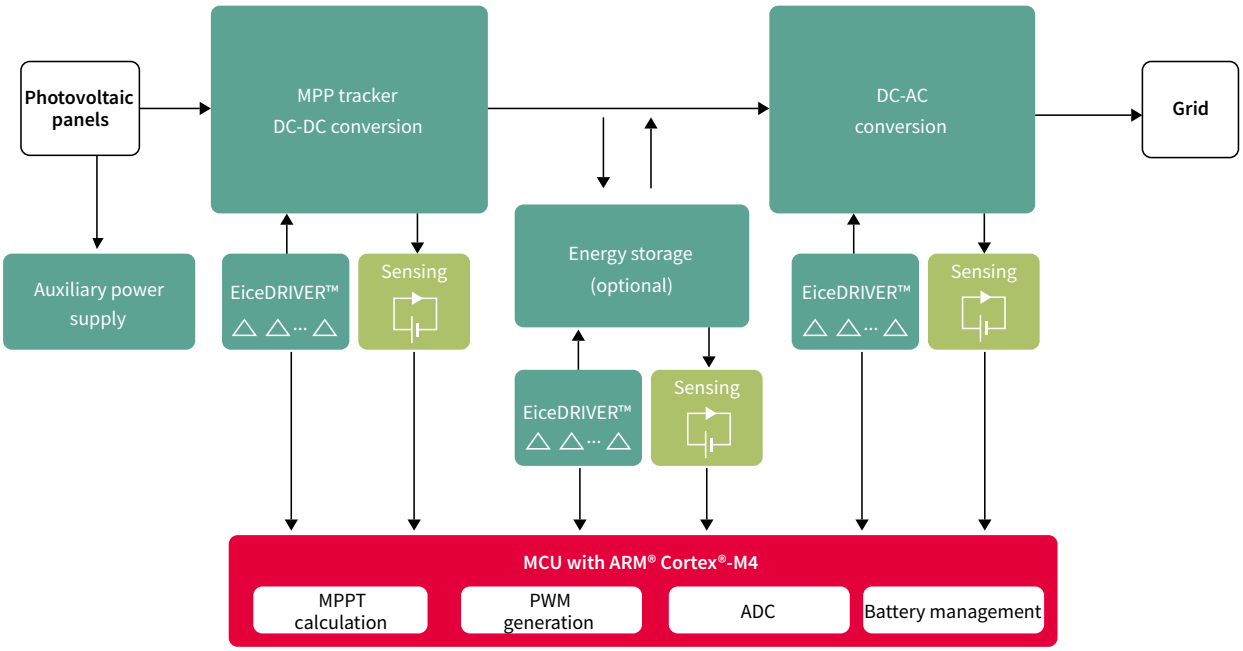

Optimizer

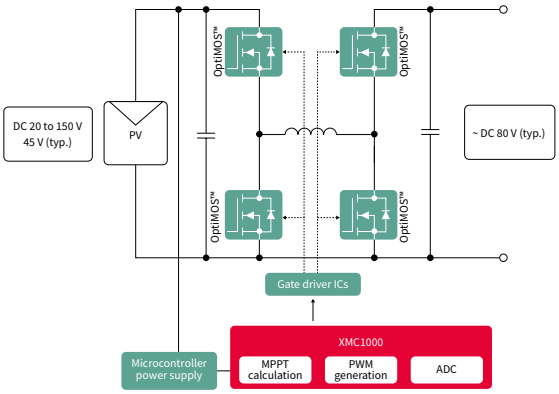

Functional block	Product family	Input voltage	Voltage class [V_{DS} max]	Package *	Part number *	$R_{DS(on)}$
Buck boost MPPT	OptiMOS™	≤ 48 V	60 V	SuperSO8	BSC012N06NS	1.2 mΩ
				DirectFET™	BSB028N06NN3 G	2.8 mΩ
		≤ 64 V	80 V	SuperSO8	BSC021N08NS5	2.1 mΩ
				DirectFET™	BSB044N08NN3 G	4.4 mΩ
		≤ 80 V	100 V	SuperSO8	BSC027N10NS5	2.7 mΩ
				DirectFET™	BSB056N10NN3 G	5.6 mΩ
		≤ 125 V	200 V	SuperSO8	BSC220N20NSFD	9.3 mΩ
	Gate-driver ICs	Single channel		PG-SOT23-6	1EDN8550	
				DSO-8	1EDI60N12AF [10 A] 1ED3124MU12F [14 A]	
		Dual channel		VDSON	2EDL81xx	
				DSO-8	IRS2011 [1 A]	
				DSO-8	2ED2181S06F [2.5 A] IRS2186ST [4 A]	
	Microcontroller	XMC1000				

Microinverter

Microinverter can either be used per

- single (~300 W) PV panel or
- multiple PV panels (600 – 1500 W)

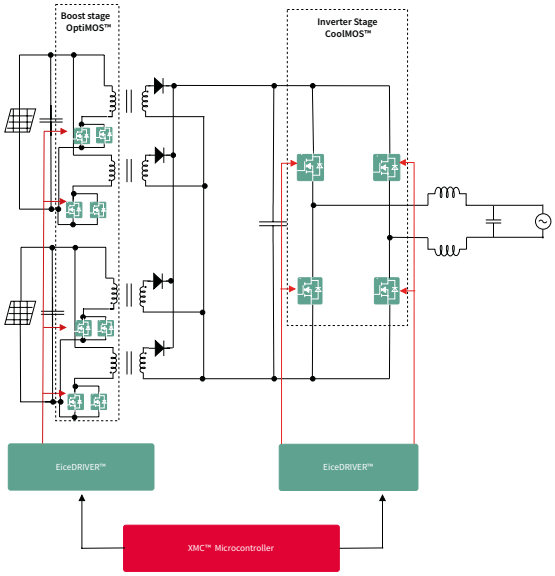

Functional block	Product family	Voltage class [V_{DS} max]	Package	Part number	$R_{DS(on)}$
MPPT – Boost stage	OptiMOS™	60 V	SuperSO8	BSC028N06NS	2.8 mΩ
		80 V		BSC026N08NS5	2.6 mΩ
		120 V		BSC190N12NS3	19.0 mΩ
		150 V		BSC093N15NS5	9.3 mΩ
				BSC160N15NS5	16.0 mΩ
	CoolSiC™ Schottky diode	1200 V	DPAK	IDM02G120C5	2.0 A
				IDM05G120C5	5.0 A
				IDM08G120C5	8.0 A
	Gate driver: EiceDRIVER™		VDSON-8	2EDL81xx	
			PG-DSO-8-60/PG-TSSOP-8-1	2EDN7524F	
			DFN-10 (3 x 3mm)	2ED2742/44/48S01G*, 2ED2732/34/38S01G*	
			DSO-8 with power-pad	2ED24427N01F	
			DSO-8	IRS2011S, IRS2005S, IRS2007S, IRS2008S	
			DSO-8	1EDI60N12AF, 1ED3124MU12F	
Inverter stage	CoolMOS™	600 V	TO-Leadless	IPT60R102G7	102.0 mΩ
			D²PAK	IPB60R145CDF7 *	145.0 mΩ
			TO-247	IPW60R145CFD7	145.0 mΩ
		650 V	D²PAK	IPB65R150CFD	150.0 mΩ
			TO-247	IPW65R150CFD	150.0 mΩ
	Gate driver: EiceDRIVER™		PG-DSO-16	2EDS8165H	
				2EDS8265H	
			PG-DSO-8/PG-DSO-14	2ED2181S06F, 2ED21814S06F	
			DSO-8	1EDI60N12AF, 1ED3124MU12F	
Microcontroller				XMC1000, XMC4000	

*For more information on the product, contact our product support

For more details on the product, click on the part number or contact our product support.

Single-phase string inverter – multilevel topology

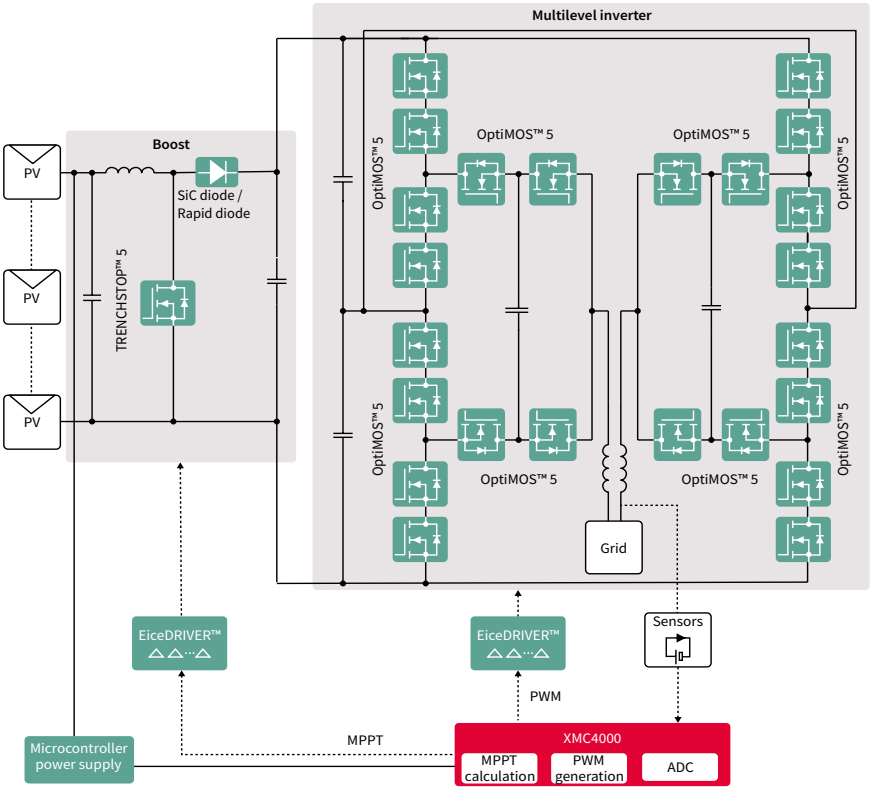

In a multilevel inverter, four high-voltage MOSFETs/IGBTs in an H-bridge topology are replaced with a higher number of lower-voltage MOSFETs. Compared to a conventional H-bridge inverter, a multilevel inverter, composed of lower voltage MOSFETs, offers several advantages:

- With much lower $R_{DS(on)}$ and switching loss parameters, it significantly reduces conduction and switching losses
- Higher effective output frequency (smaller magnetics) is possible with lower switching losses
- Improved EMC due to reduced switching voltages
- Significant reduction in the cooling system, size and weight

Discrete power devices for multilevel string inverter

Functional block	Product family	Voltage class [V_{DS} max]	Package	Part number	$R_{DS(on)}$
Boost	CoolMOS™	600 V	TO-247	IPW60R017C7	17 mΩ
			TO-247	IPW60R024P7	24 mΩ
			D²PAK	IPB60R045P7	45 mΩ
	IGBT TRENCHSTOP™ 5	650 V	TO-247	IKW40N65EH5, IKW40N65ES5	40 A
			D²PAK	IKB40N65EH5, IKB40N65ES5	40 A
	CoolSiC™ Schottky diode	650 V	TO-247	IDW20G65C5	20 A
	EiceDRIVER™ 1EDN		PG-SOT23-6	1EDN8511B	4 A/8 A
Flying-capacitor-based active neutral-point-clamp (NPC)	OptiMOS™	150 V	SuperSO8	BSC093N15NS5	9.3 mΩ
			SuperSO8	BSC110N15NS5	11 mΩ
			DirectFET™	IRF150DM115 *	11.3 mΩ
			D²PAK	IPB044N15N5	4.4 mΩ
			D²PAK	IPB048N15N5	4.8 mΩ
Gate-driver ICs	EiceDRIVER™ 2EDi		NB-DSO16	2EDF7275F	4 A/8 A
	EiceDRIVER™ SOI	650 V	DSO-8, DSO-14	2ED2181S06F / 2ED21814S06J	2.5 A
	EiceDRIVER™ Compact	1200 V/2300 V	DSO-8	1EDI60N12AF, 1ED3124MU12F	10 A, 14 A
Microcontroller	XMC4000				

*For more information on the product, contact our product support

For more details on the product, click on the part number or contact our product support.

Single-phase string inverter

H4 topology

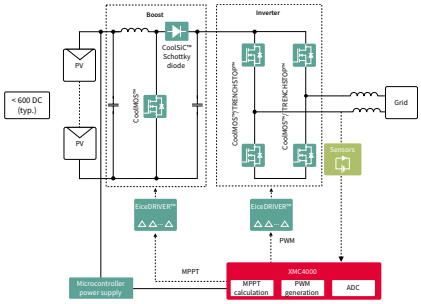

H6 topology

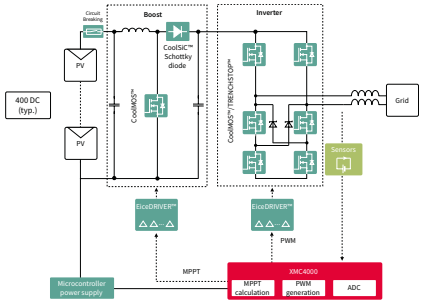

Three-phase string inverter

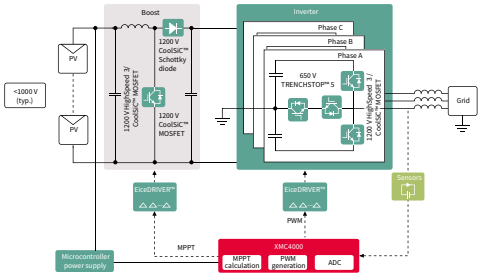

Discrete power devices for string inverter

Inverter type	Functional block	Product category	Product technology	Voltage	Package	Part number	$R_{DS(on)}$	Ampere
Single phase	MPPT – Boost stage	Si MOSFET	CoolMOS™ P7	600 V	TO-247-3	IPW60R037P7	37 mΩ	-
					TO-247-4	IPZA60R037P7	37 mΩ	-
		SiC MOSFET	CoolSiC™ MOSFET	650 V	TO-247-4	IMZA65R027M1H	27 mΩ	-
					TO-247-3	IMW65R048M1H	48 mΩ	-
				1200 V	TO-247-3	IMW120R045M1	45 mΩ	-
		IGBT	TRENCHSTOP™ 5 S5/H5	650 V	TO-247-3	IKW40N65ES5, IKW40N65EH5	-	40 A
					TO-247-4	IKZ50N65ES5, IKZ50N65EH5	-	50 A
		Diode	CoolSiC™ diode	650 V	TO-247	IDW20G65C5	-	20 A
	Inverter	Si MOSFET	CoolMOS™ C7	650 V	TO-247-3	IPW65R65C7*	65 mΩ	-
			CoolMOS™ S7	600 V	TO-Leadless	IPT60R022S7	22 mΩ	-
						IPT60R040S7	40 mΩ	-
			CoolMOS™ CFD 7	600 V	TO-247-3	IPW60R018CFD7	18 mΩ	-
				600 V	TO-247-3	IPW60R031CFD7	31 mΩ	-
		SiC MOSFET	CoolSiC™ MOSFET	650 V	TO-247-4	IMZA65R027M1H	27 mΩ	-
					TO-247-3	IMW65R048M1H	48 mΩ	-
				1200 V	TO-247-3	IMW120R045M1	45 mΩ	-
		IGBT	TRENCHSTOP™ 5 S5/H5	650 V	TO-247-4	IKZ50N65ES5, IKZ50N65EH5	-	50 A
					TO-247-3	IKW40N65ES5, IKW40N65EH5*	-	40 A
Three phase	MPPT – Boost stage	IGBT	HighSpeed 3	1200 V	TO-247-3	IKW40N120H3	-	40 A
					TO-247PLUS-3	IKQ75N120CH3	-	75 A
		SiC MOSFET	CoolSiC™ MOSFET	1200 V	TO-247-3/-4	IMW120R030M1H, IMZ120R030M1H	30 mΩ	-
						IMW120R045M1, IMZ120R045M1	45 mΩ	-
						IMW120R060M1H, IMZ120R060M1H	60 mΩ	-
	Inverter	IGBT	HighSpeed 3	1200 V	TO-247-3	IKW40N120H3	-	40 A
					TO-247PLUS-3	IKQ750N120CH3*	-	75 A
		SiC MOSFET	CoolSiC™ MOSFET	1200 V	TO-247-3/-4	IMW120R030M1H, IMZ120R030M1H	30 mΩ	-
						IMW120R045M1, IMZ120R045M1	45 mΩ	-
						IMW120R060M1H, IMZ120R060M1H	60 mΩ	-
Gate-driver ICs			EiceDRIVER™ low side	25 V	SOT23-6	1ED44175/3N01B	2.6 A	
				24 V	DSO-8	2ED24427N01F	10 A	
			EiceDRIVER™ SOI	650 V	DSO-8	2ED2181S06F	2.5 A	
			EiceDRIVER™	1200 V	SSOP-23, DSO-16	IR2214SS, IR2213S	2.5 A	
			EiceDRIVER™ Compact	1200 V	DSO-8	1EDI60I12AF, 1EDI30I12MF	10 A, 6 A	
				2300 V	DSO-8	1ED3124MU12H, 1ED3122MU12H	14 A, 10 A	
			EiceDRIVER™ Enhanced	1200 V	DSO-16/36	1ED020I12-F2, 2ED020I12-F2	2 A	
				2300 V	DSO-16	1ED3491MU12M, 1ED3890MU12M	9 A	
			EiceDRIVER™ 2EDN family, EiceDRIVER™ 1EDB					
Microcontroller			XMC4000					

*For more information on the product, contact our product support

For more details on the product, click on the part number or contact our product support.

Super solid state solutions

FET-based high-voltage solid-state relays

Best-in-class $R_{DS(on)}$ x A enables unprecedented low losses in combination with advanced control and protection features

Electromechanical relays are a mature technology and well established. However, they suffer from some inherent weaknesses. The mechanical movement of metal contacts causes noise. The high voltages can arc before the contacts are completely opened or closed, which leads to contact degradation. An increase of the contact resistance over the lifetime causes behavior to become less predictable. Triacs (or silicon-controlled rectifies, SCRs) are widely used as solid-state relays in AC applications. However, their controllability is limited and they suffer from high power dissipation in the range of 1 W/A.

FET-based solid-state solutions offer many benefits in relay applications. This includes significantly faster switching while eliminating arcing and the noise associated with electromechanical devices. Inherently, these result in higher reliability and more stable performance. When considering the maintenance, repair and operations (MRO) cost, a strong argument can be made for using solid-state. Compared to atriacs, a FET-based solution offers advanced control and protection methods. The significantly lower power dissipation minimizes the cooling effort in the application. The latest CoolMOS™ S7(A) technology is a perfect match for solid-state relay applications. It offers an unprecedentedly low $R_{DS(on)}$ x A figure of merit that will meet the needs of customers and their end markets.

Features and benefits

Key features	Key benefits
› Operational lifetime: tens of millions operations	› Maintenance free (no degradation of contacts), MRO cost savings
› No mechanical parts	› Arcing-free operation, no contact bounce, clicking noise is eliminated
› Significantly faster switching	› Advanced control and protection methods
› No increasing resistance vs. lifetime	› Stable performance, predictable behavior
› Lowest $R_{DS(on)}$ x A in class	› Highest power density, minimized cooling effort, parallelization and scalability

Application diagram

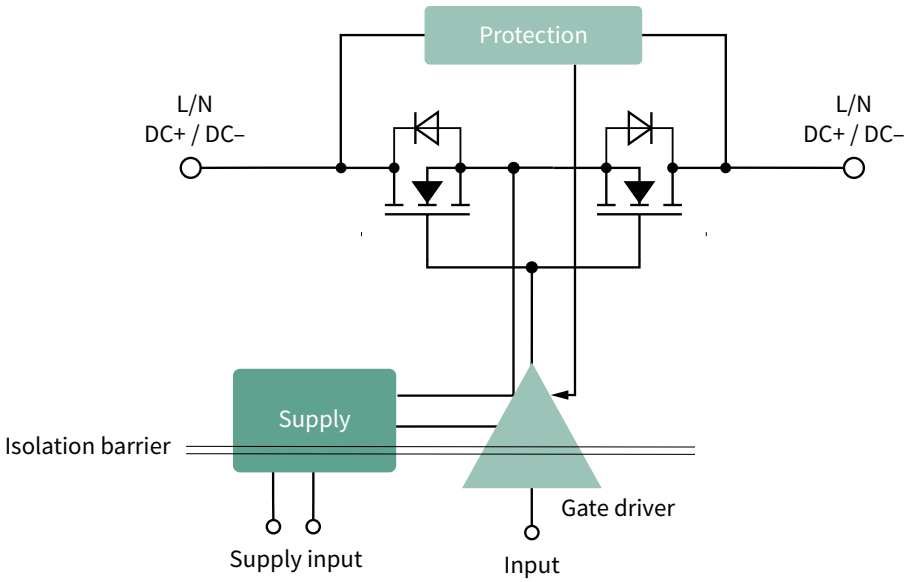

Product portfolio

Product	Product family	Voltage class [V_{DS} max]	$R_{DS(on)}$	Package	Part number
MOSFETs	CoolMOS™ S7 Industrial	600 V	22 mΩ	TO220	IPP60R022S7
			65 mΩ	TOLL	IPT60R065S7
			40 mΩ	TOLL	IPT60R040S7
			22 mΩ	TOLL	IPT60R022S7
			10 mΩ	QDPAK top-side cooled	IPDQ60R010S7
	CoolMOS™ S7A Automotive	600 V	10 mΩ	QDPAK top-side cooled	IPDQ60R010S7A

Product	Product family	Output voltage	Output current	Isolation voltage	Part number
Gate drivers	EiceDRIVER™	20 V	± 2 A to ± 6 A	1.2 kV	1EDIx0I12MF
			± 2 A to ± 6 A	2.5 kV	1EDCx0I12MF
		40 V	± 10 A to ± 14 A	2.5 kV	1ED312xMU12F
			± 10 A	5.7 kV	1ED3122MU12H
			± 3 A	5.7 kV	1ED3431MU12M
			± 6 A	5.7 kV	1ED3461MU12M
			± 9 A	5.7 kV	1ED3491MU12M

Product	Product family	Load voltage	Output / load current	Isolation voltage	Part number
Integrated solid-state relays	Photovoltaic isolators (PVI)	-	2 x 5 µA	3.75 kV	PVI5033R
		-	2 x 5 µA	2.5 kV	PVI1050N
	Photovoltaic relays (PVR)	60 V	2 A	4 kV	PVG612A
		400 V	1 A	3.75 kV	PVX6012

SMPS

Full system solutions for embedded power supplies

Customers who design or manufacture a product that needs embedded intelligence typically want to focus on the system design of their product, be it white goods, a vending machine, an automatic door opener or any other product. They do not want to spend valuable time and extra effort in designing the power supply systems. They just want to use them, having a trouble-free, EMI friendly, and reliable power supply.

Along with a wide range of products, we developed flexible and easy to reuse reference designs with the intention to provide our customers with best fitting solutions tailored for their different needs.

Depending on these needs, our customers can select very low-cost power supply reference designs featuring high integration or using a platform approach to reuse the same power designs for different products that need different power supplies. If high efficiency is needed, for example to meet ENERGY STAR label requirements or to improve overall thermal performance, we offer power supply reference designs with outstanding efficiency levels.

Our comprehensive reference design offering coupled with application notes help our customers to drastically improve the efficiency of their power supply by using secondary-side synchronous rectification instead of a rectifier diode. Benefits of synchronous rectification are greater efficiency and improved thermal performance of the power supply.

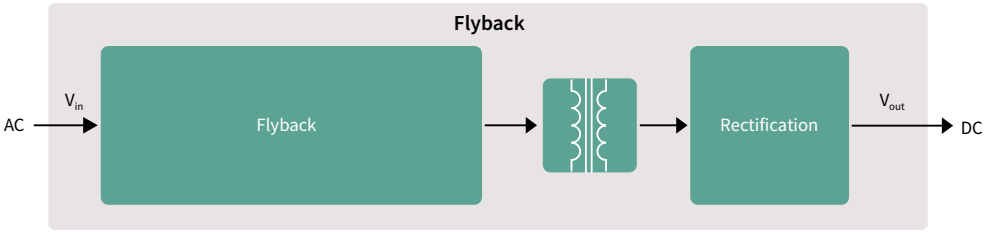

Functional block	Product category	Topology	Technology	Benefits
Auxiliary power supply	Control ICs	QR/FF flyback CoolSET™	700 V/800 V ICE5QRxx70/80A(Z)(G)	› Low standby power, high efficiency and robustness
Flyback	Control ICs	QR flyback	ICE5QSBG	› High efficiency and low standby power
	High-voltage MOSFET	Flyback	700 V/800 V CoolMOS™ P7	› Best price-competitive CoolMOS™ family › Lower switching losses versus standard MOSFET › Controlled dV/dt and di/dt for better EMI

For more details on the product, click on the part number or contact our product support.

Industrial SMPS

Reliable and robust

Industrial SMPS powers a wide range of devices from industrial automation robots to medical equipment and vending machines. With the expansion of the Internet of Things (IoT) and the adoption of Industry 4.0, the demand for industrial SMPS is on the rise. Industrial switch-mode power supplies (SMPS) are mostly operated in outdoor environments without air conditioning or systems without fans. Such operating conditions make reliability and robustness the key requirements for the industrial SMPS, especially when it comes to high-temperature operations, outdoor use, line surges, load jumps, short circuit, etc. In addition to quality, reliable supply and long-term product availability are also some of the key customer concerns. Industrial SMPS life cycle goes over 10 years and it takes 3 to 5 years to ramp. Hence, not only do customers need a high-quality product, but also a stable and reliable supply over the industrial SMPS life cycle (10 to 20 years). Infineon offers this with its CoolMOS™, OptiMOS™, and StrongIRFET™ product families with EiceDRIVER™ gate driver, which thanks to the high robustness and reliable performance have been meeting customer and market requirements for more than 20 years. Infineon's products offer the best price/performance ratio along with the highest efficiency and reliability. For new designs, we highlight our CoolMOS™ P7 600 V/800 V/950 V parts, as well as the latest generation of OptiMOS™ 30 V/40 V/60 V/80 V/ 100 V/150 V and 250 V products. For designs with convection-cooled, high power supplies, our CoolMOS™ S7 in active bridge will reduce the power losses to enable the operation without fans.

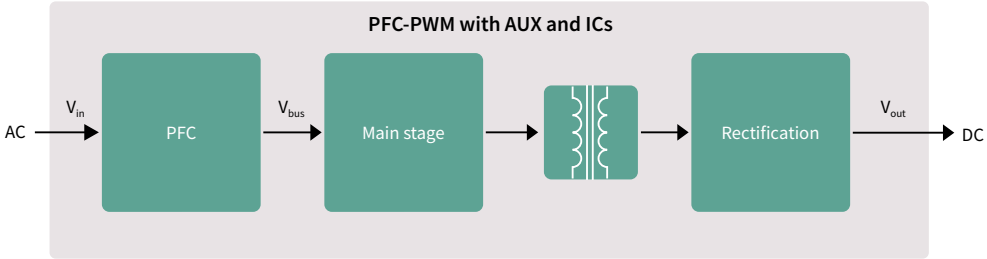

Functional block	Product category	Topology	Technology	Benefits
PFC/Main stage	High voltage MOSFETs	CrCM/DCM PFC	600 V / 800 V / 950 V CoolMOS™ P7	› Best thermal performance › Rugged body diode › ESD enhancement for production line › Wide $R_{DS(on)}$ portfolio including both THD and SMD packages
			600 V CoolMOS™ P6	› Fast-switching speed for improved efficiency and thermals › Low gate charge for enhanced light-load efficiency and low power consumption at no load condition › Optimized V_{GS} threshold for low turn-off losses
			600 V CoolMOS™ S7	› PFC efficiency boost ~1% › Lowest $R_{DS(on)}$ in SMD packages
	Boost diodes	DCM PFC	650 V Rapid 1	› Low conduction losses
		CCM PFC	650 V Rapid 2	› Low reverse recovery losses and PFC switch turn-on losses
	Control ICs	CCM PFC ICs	ICE3PCS0xG	› High PFC and low THD
Main stage	Control ICs	HB LLC ICs	650 V – ICE1HS01G-1/ ICE2HS01G	› High efficiency and low EMI
Synchronous rectification	Medium voltage diodes	HB LLC + center-tap	OptiMOS™ 30 V/40 V/60 V/80 V/150 V/250 V	› Optimized cost/performance and low thermals
PFC / Main stage / Synchronous rectification	Gate Driver ICs	Boost PFC	EiceDRIVER™ Low side: 1ED44173N01B	› Single-channel with fast, accurate (+/- 5%), integrated over-current protection (OCP)
		Totem-pole PFC / HB LLC	EiceDRIVER™ Compact: 1EDI60N12AF, 1ED3124MU12F	› Isolated gate driver, up to 14 A, 100 ns propagation delay
			EiceDRIVER™ level-shift: 2ED2181S06F, 2ED21814S06J	› 650 V half-bridge SOI driver with integrated bootstrap diode › Superior –VS transient voltage immunity › High-frequency switching (500 kHz)
			EiceDRIVER™ level-shift: IRS2186S, IRS21864S	› 4 A/ 4 A high- and low-side gate driver
		Interleaved PFC / HB LLC	EiceDRIVER™ Low side: 2ED24427N01F	› Dual-channel, 10 A low-side driver in DSO-8 with power-pad › Integrated UVLO protection and enable (EN) function › High frequency, high power operation w/BOM savings

For more details on the product, click on the part number or contact our product support.

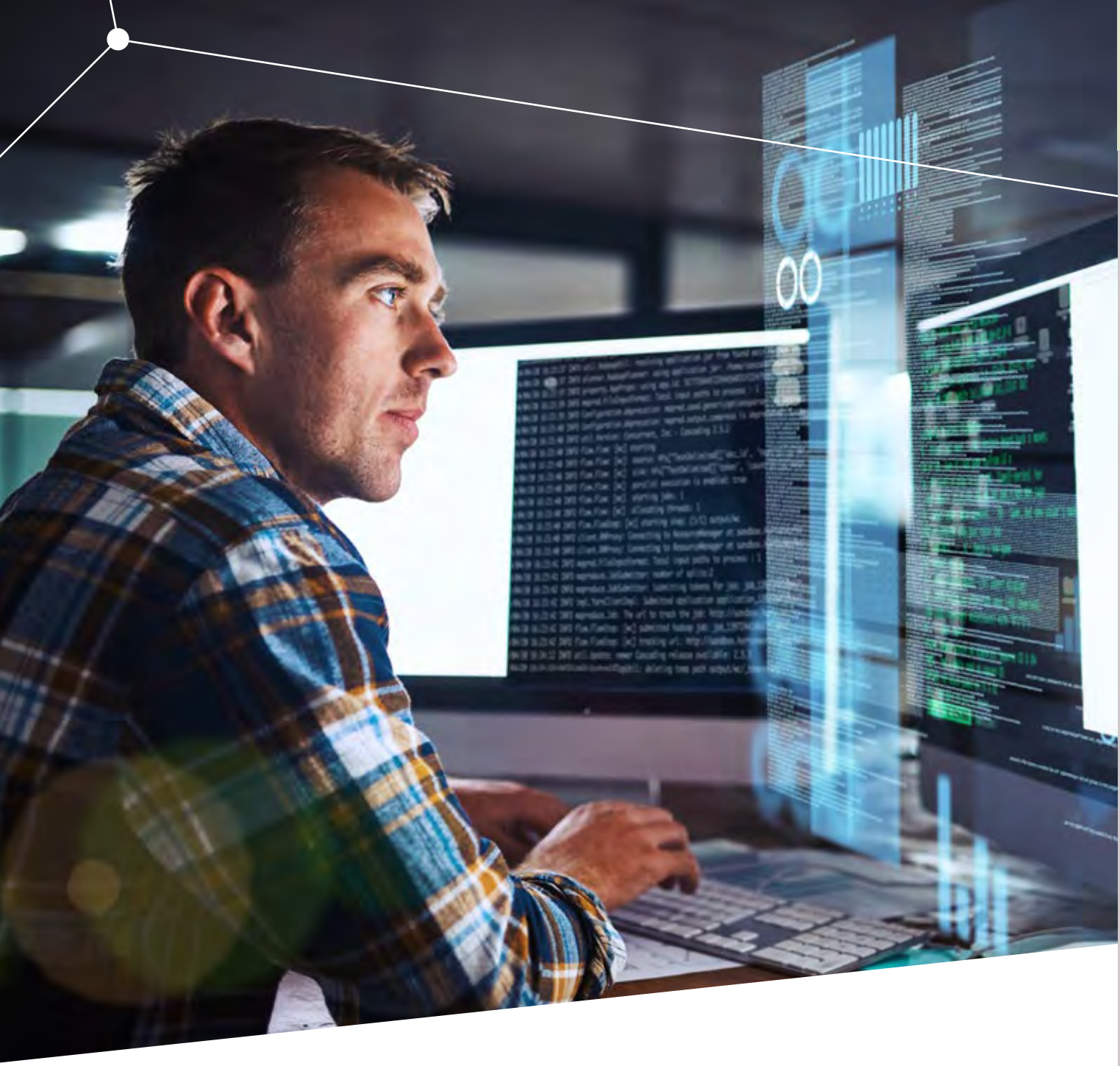

SMPS and digital power management solutions for data processing applications

- DC-DC enterprise power solution for data processing applications
- SMPS - laptop adapters
- SMPS - PC power supply
- SMPS - server power supply
- SMPS - telecom power supply

DC-DC enterprise power solution for data processing applications

Multiphase and point-of-load DC-DC solution

As an industry leader in digital power management, Infineon delivers solutions for the next-generation server, communication, storage and client computing applications. Infineon offers a complete portfolio including digital PWM controllers, integrated power stages, integrated point-of-load (POL) voltage regulators, MOSFET drivers, power blocks and discrete MOSFETs. These proven technologies offer full flexibility to our customers to optimize a complete system solution for space, performance, ease of design and cost to meet critical design goals. In addition, our latest software tools help simplify design, shorten design cycles and improve time-to-market.

Features and benefits

Key features	Key benefits
› Best-in-class efficiency	› Digital controller and power stage provide industry's highest efficiency of more than 95 percent
› Multi-protocol support	› Intel SVID, AMD SVI2, NVIDIA PWM VID, parallel VID (up to 8 bits) , PMBus™ Rev1.3, AVS Bus (PMBus™ Rev1.3)
› Complete system solution	› A broad portfolio of fully integrated point-of-load, integrated power stage and digital controller solutions in addition to discrete drivers and MOSFETs offers full flexibility to optimize complete system solutions ranging from 1 A to 1000+ A
› Digital controller flexibility	› Industry's benchmark for feature richness and low quiescent power with up to 16-phases
› Ease of design	› Intuitive GUI enables faster optimization, thereby reduces design cycle time
› Smallest solution size	› Best-in-class OptiMOS™ MOSFETs combined with advanced packaging technologies enable high power density at high efficiency, and the superior control engine with digital controllers helps minimize output capacitance significantly

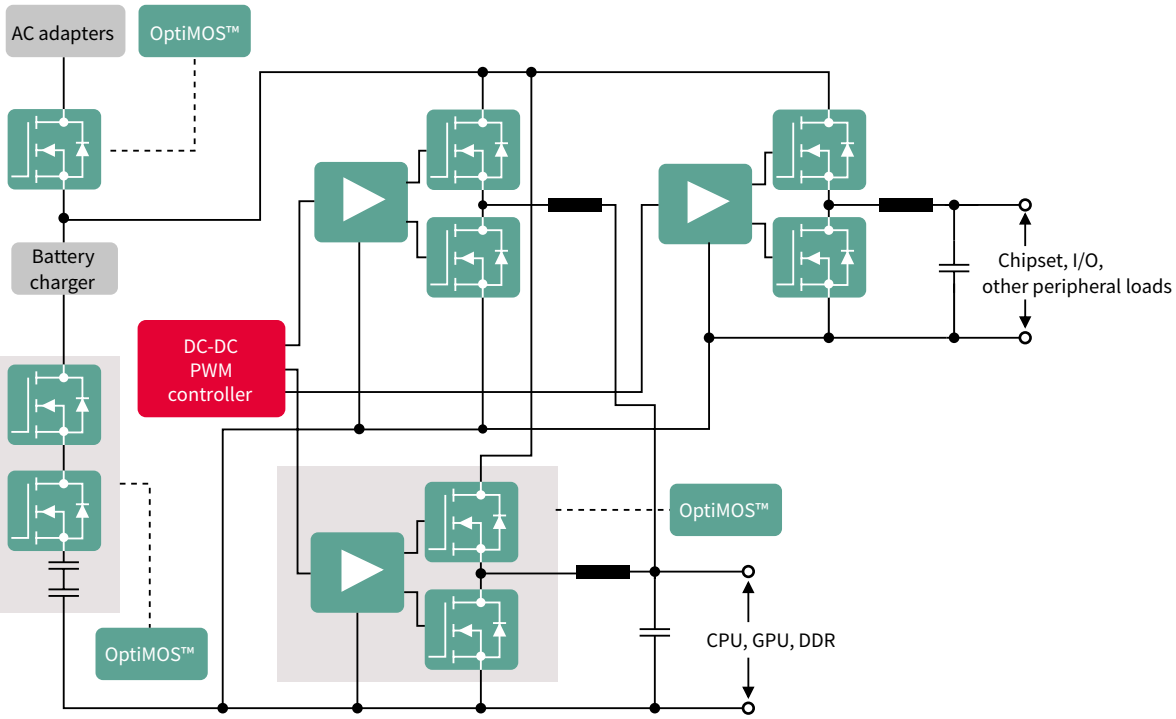

Multiphase DC-DC system solution

	Server/storage	Powered ICs	Voltage	
Server / Storage	Server-Intel/IBM/AMD/ARM Workstation Storage	Server chipset	VCCIO VMCP	V_{core} V_{mem}
Consumer	**High-end consumer** High-end desktop Notebook Gaming Graphic Industrial PC	PC chipset		V_{core} Graphics
Datacom / Telecom	**Comms** **Datacom** Comms core SOHO SAN Edge access **Telecom** Base station (macro + distributed)	ASIC ASSP FPGA	FPGAs (~0.5–3.3 V) ASICs (~1.0 V) ASSPs (~1.0 V)	Networking SoCs and ASICs, FPGAs Multi-core processors Ethernet switch ICs
			10-30 A single-phase (multi-rail)	>30 A multiphase/rail

DC-DC enterprise power solution for data processing applications

Integrated point-of-load (IPOL) converters

Infineon's IPOL converters integrate a PWM controller, a driver and MOSFETs into a small PQFN package for ease of use. The patented PWM modulation scheme allows greater than 1 MHz switching frequencies to deliver ultracompact layouts and and the smallest bill of materials (BOM). A PMBus™ interface is available for monitoring and control in systems that use advanced CPUs, ASICs and FPGAs.

Block diagram

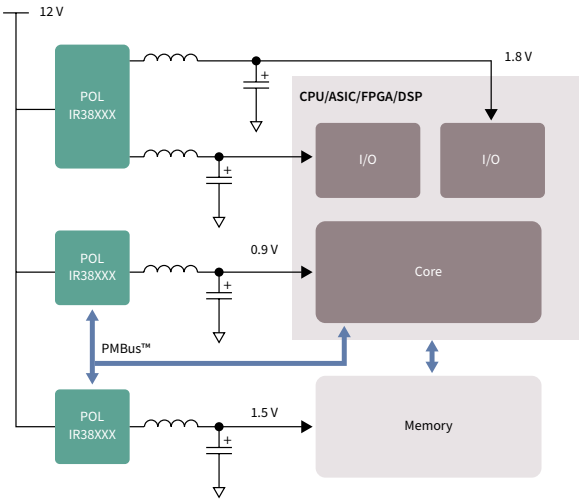

Key features

- Input voltage range 4.5-21 V
- Output current 1-35 A
- Operating temperature range of -40 to 125°C

Key benefits

- Integrated controller, driver, MOSFETs for small footprint
- High-efficiency MOSFETs and thermally enhanced packages for operation without heat sinks

Di-PoL

DC-DC IPOL portfolio

Digital interface IPOL

I²C PMBus™, telemetry, margin, faults, SVID PVID Digital control/configuration, telemetry and diagnostic					
Part number	Max. current [A]	Package size [mm]	Max. V_{in}	Max. f_{sw}	Distinctive features
IR38064MTRPBF	35	5 x 7	21 V	1500 KHz	PMBus™
IR38063M	25	5 x 7	21 V	1500 KHz	
IR38062M	15	5 x 7	21 V	1500 KHz	
IR38060M	6	5 x 6	16 V	1500 KHz	
IR38163M	30	5 x 7	16 V	1500 KHz	OptiMOS™ 5, SVID + PMBus™
IR38165M	30	5 x 7	16 V	1500 KHz	OptiMOS™ 5, SVID
IR38363M	15	5 x 7	16 V	1500 KHz	OptiMOS™ 5, SVID + PMBus™
IR38365M	15	5 x 7	16 V	1500 KHz	OptiMOS™ 5, SVID
IR38263M	30	5 x 7	16 V	1500 KHz	OptiMOS™ 5, PVID + PMBus™
IR38265M	30	5 x 7	16 V	1500 KHz	OptiMOS™ 5, PVID
IR38164M	30	5 x 7	16 V	1500 KHz	OptiMOS™ 5, SVID + PMBus™, enhanced Imon
IRPS5401M	4+4+2 +2+0.5	7 x 7	14 V	1500 KHz	5 output PMIC, PMBus™

Analog IPOL

„Performance" voltage-mode PWM Ultralow jitter and noise, high accuracy and low ripple					
Part number	Max. current [A]	Package size [mm]	Max. V_{in}	Max. f_{sw}	Distinctive features
IR3883MTRPBF	3	3 x 3	14 V	800 KHz	Constant-on-time (COT)
IR3823AMTRPBF	3	3.5 x 3.5	17 V	2000 KHz	
IR3899AMTRPBF	9	4 x 5	17 V	2000 KHz	
TDA38820	20	4 x 5	17 V	2000 KHz	
IR3888MTRPBF	25	5 x 6	17 V	2000 KHz	
IR3447AMTRPBF	25	5 x 6	17 V	600 KHz	
IR3887MTRPBF	30	4 x 5	17 V	2000 KHz	
IR3889MTRPBF	30	5 x 6	17 V	2000 KHz	
TDA38840	40	5 x 6	17 V	2000 KHz	
IR3846AMTRPBF	40	5 x 7	17 V	600 KHz	

For more details on the product, click on the part number or contact our product support.

SMPS

Right-fit portfolio for competitive design of laptop adapters

Manufacturing slimmer and lighter adapter requires ICs that enable high efficiency with good electromagnetic interference (EMI) performance and low standby power. There is also a need for cost-effective MOSFETs in small packages that feature good EMI and excellent thermal performance. Infineon offers a wide range of products specifically designed for adapters including high-voltage MOSFETs and control ICs for PFC and PWM stages, as well as low-voltage MOSFETs for synchronous rectification. With these products, Infineon supports the trend towards a significantly higher efficiency level, especially in partial load conditions, as well as the miniaturization of the adapter.

Extremely versatile are the CoolMOS™ P7 SJ MOSFET series and the latest body-diode performance-enhanced CoolMOS™ PFD7 series which combine high efficiency and optimized cost with ease of use. Infineon developed a family of packages, characterized by having a short lead, IPAK short lead with ISO-standoff and wide creepage that enable our customers' low-cost and reliable manufacturing, specifically for adapters. High power density at low manufacturing cost can be achieved by using Infineon's SOT-223 cost-effective package and ThinPAK 5x6 and 8x8 high-density SMD packages which enable SMT manufacturing while maintaining very good thermal performances. For synchronous rectification, Infineon's OptiMOS™ PD logic-level power MOSFET series offers extremely low on-state resistance and low capacitances.

The new control ICs such as the digital-based XDP™ controller enable forced-frequency-resonant zero-voltage-switching (FFR ZVS) operation, ideal in high-power-density adapter designs and supporting USB-PD requirements.

Infineon Type-C controllers are based on PSoC® 4 programmable system-on-chip architecture, which includes programmable analog and digital blocks, an Arm® Cortex®-M0 core and 32 KB of flash memory. This product family is driving the industry's first Type-C products with top-tier PC makers, enabling them to bring these USB Type-C benefits to market. Infineon has reference designs readily available for EMCA and dongle applications. These are available online and could be used to speed-up our customer's design cycle.

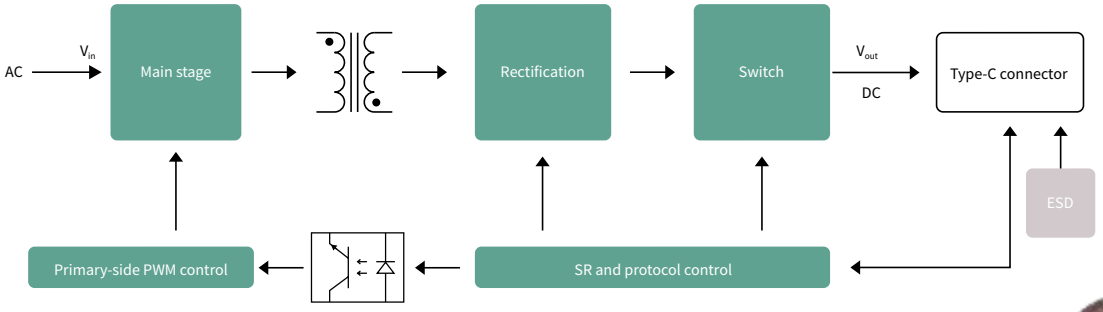

Multiple and often clunky chargers and adapters for phones, tablets, and laptops pose a nuisance for many users due to the additional weight and added space. That created a need and a trend towards higher power density and consequently smaller devices. Infineon's latest digital solutions enable a breakthrough concerning power density for adapter and charger systems enabling ~20 W/in³ power density systems (for 65 W maximum output power).

Infineon's 20 W/in³ adapter (cased) - 24 W/in³ (uncased) with 65 W output power capability (LxWxH: 74.2 mm x 36.5 mm x 16.5 mm)

Recommended products

Functional block	Product category	Topology	Product family	Benefits
Flyback converter	High-voltage MOSFETs and HEMTs	Flyback	600 V/700 V/800 V CoolMOS™ P7 SJ MOSFETs	› Fast switching speed for improved efficiency and thermals › Reduced gate charge for enhanced light load efficiency › Optimized gate-to-source voltage (V_{GS}) threshold for lower turn-off losses
		ACF, FMCI	600 V CoolMOS™ PFD7 SJ MOSFETs	› Robustness and reliability with integrated robust fast body diode and up to 2 kV ESD protection › Reduced gate charge for enhanced light load efficiency › Lower hysteresis loss
		Flyback (ACF, FFR, etc.)	CoolGaN™ e-mode HEMTs 600 V	› Highest efficiency › Highest power density
	Low-voltage MOSFETs	Flyback/auxiliary synchronous rectification	OptiMOS™ 100-150 V	› Low conduction losses and reduced overshoot › Logic level can support low voltage gate drive to achieve high efficiency
	Control ICs	FQR flyback IC	XDPS21081	› Optimization of low line AC input with force quasi-resonant › Suitable for high power density design
		Hybrid flyback IC	XDPS2201	› Asymmetrical half-bridge ZVS control to maximize efficiency › Supports wide range of configurable parameters › Supports ultrahigh power density (20 W/in³) design
		Quasi-resonant	PAG1P/S	› Secondary-side-controlled flyback solution › Cost-effective solution for USB-PD
	Gate-driver IC	Active-clamp flyback (ACF)	IRS25752L	› High-side gate driver enables active clamp mode of operation › Cost-effective, 600 V, single-channel driver in SOT23 package
			IRS21271S	› High-side gate driver enables active clamp mode of operation › 600 V, single-channel driver with overcurrent protection (OCP)
		CoolGaN™ driver	1EDI20N12AF	› 4 A 1-ch isolated driver with 120 ns prop delay
			2ED2110S06M	› 650 V, 2.5 A high and low side driver
			2ED2182S06F	› 650 V, 2.5 A half-bridge driver
			2ED2619J06J* 2ED2626J06J*	› Tailor-made for 190 mΩ / 260 mΩ GaN HEMT
PFC DC-DC	High-voltage MOSFETs, HEMTs, and diodes	DCM PFC	600 V CoolMOS™ P7 SJ MOSFETs	› Fast switching speed for improved efficiency › Reduced gate charge for enhanced light load efficiency › Optimized gate-to-source voltage (V_{GS}) threshold for lower turn-off losses
		DCM/CCM PFC	CoolGaN™ e-mode HEMTs 600 V	› Highest efficiency contribution via less parasitic parameter › Space saving with SMD smaller package
	Boost diode	DCM/PFC	650 V Rapid 1 diodes	› Low conduction losses
	Control ICs	DCM PFC ICs	TDA4863G, IRS2505LTRPBF	› Simple external circuitry › High PFC and low THD
	High-voltage MOSFETs and HEMTs	HB LLC	600 V CoolMOS™ P7 SJ MOSFETs	› Fast switching speed for improved efficiency and thermals › Reduced gate charge for enhanced light load efficiency › Optimized gate-to-source voltage (V_{GS}) threshold for lower turn-off losses
			CoolGaN™ e-mode HEMTs 600 V	› Highest efficiency › Highest power density
	Gate-driver IC	HB LLC	EiceDRIVER™ Compact: 1EDI60N12AF, 1ED3124MU12F	› Isolated gate driver, up to 14 A, 100 ns propagation delay
Synchronous rectification	Low-voltage MOSFETs	Synchronous rectification	OptiMOS™ PD 100-150 V	› Low conduction losses, reduced overshoot › Adapter-oriented synchronous rectification MOSFETs
	Control ICs	Synchronous rectification	IR1161LTRPBF	› High efficiency › Simple external circuitry

*Coming soon

For more details on the product, click on the part number or contact our product support.

SMPS

More efficient PC power supply

The PC power market is divided into high-end gaming PC and better cost-performance sectors to achieve a better price/performance for desktop SMPS. The PC OEMs are implementing the desktop SMPS by removing the AUX power block to save the cost of having a flyback circuit.

Due to the new structure of the CPU and GPU, higher and higher peak power is needed (1.5 to 2 times higher than normal power). In addition to the needed CCM PFC, Infineon 600 V CoolMOS™ P7 and OptiMOS™ 40 V / 60 V offer the best price/performance and reliability to meet the design requirements, as well as to achieve the highest efficiency enabled by semiconductors available in the market.

For that CPU and GPU power-hungry gaming PCs, the ICE3PCS0xG CCM PFC IC provides high efficiency over the whole load range and low count of external components, besides that, the ICE3PCS0xG CCM PFC IC offers fast output dynamic response during load jump. In addition to PGFC IC, Infineon's LLC ICs ICE1HS01G/ICE2HS01G support customers to minimize the external component count.

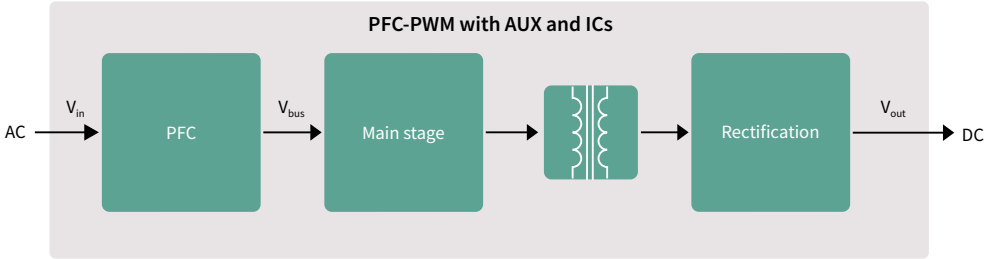

Recommended products

Functional block	Product category	Topology	Technology	Benefits
PFC/main stage	High voltage MOSFETs	CrCM/DCM PFC	600 V CoolMOS™ P7	› Best thermal performance › Rugged body diode › ESD enhancement for production line › Wide $R_{DS(on)}$ portfolio including both THD and SMD packages
			600 V CoolMOS™ P6	› Fast switching speed for improved efficiency and thermals › Low gate charge for enhanced light-load efficiency and low power consumption at no load condition › Optimized V_{GS} threshold for low turn-off losses
			500 V CoolMOS™ CE	› Optimized cost/performance › Lower transition losses versus standard MOSFET
	Boost diodes	DCM PFC	650 V Rapid 1	› Low conduction losses
		CCM/interleaved PFC	CoolSiC™ Schottky diode 650 V G6	› Low FOM V_F *Q_G
	Control ICs	CCM PFC ICs	ICE3PCS0xG	› High PFC and low THD
Main stage	Control ICs	HB LLC ICs	650 V – ICE1HS01G-1/ ICE2HS01G	› High efficiency and low EMI
Synchronous rectification	Medium voltage diodes	HB LLC + center-tap	OptiMOS™ 40 V	› Optimized cost/performance and low thermals
			OptiMOS™ 60 V	› Layout tolerance and low thermals

For more details on the product, click on the part number or contact our product support.

SMPS

Highly efficient server power supply

The trend in the field of data center and enterprise servers is to deliver more power per rack. Meanwhile, the rising cost of energy and environmental concerns make SMPS-efficiency optimization a key requirement across the entire load range for server and data center designs. This challenging task is combined with the requirement for higher power density and cost effectiveness.

In the PFC stage and generally in hard-switching topologies used in server applications, Infineon recommends its 600 V CoolMOS™ C7 and G7 families offering the lowest FOM $R_{DS(on)}$ *Q_G and $R_{DS(on)}$ *E_{oss}. These MOSFET series provide the lowest switching losses, which is necessary in fast-switching-frequency operations in high-end server SMPS. With Infineon's C7 and G7 series, the efficiency is optimized already from a very light-load operation. 600 V CoolMOS™ C7 and G7 products are used with Infineon's industry-benchmark non-isolated 2EDN752x gate-driver IC family, and EiceDRIVER™ Compact 1ED-AF isolated driver family. Available in compact SMD packages such as ThinPAK, DDPAK and TOLL, these SJ MOSFETs offer benefits in space usage and power density.

Complementary to the 600 V CoolMOS™ C7 in high efficiency PFC is the CoolSiC™ Schottky diodes. The 600 V CoolMOS™ P7 family offers a good compromise between price and performance. This is valuable in both PFC and HV DC-DC stages where low Q_G and turn-off losses are important benefits, especially in case of high-switching-frequency operation and high light-load efficiency requirements.

As high power (2-6 kW and above) require ultrahigh efficiency (96-98 percent peak) and high power density, Infineon's CoolGaN™ 600 V e-mode HEMTs family with totem-pole PFC controls deliver the highest efficiency and power density in the world. Using the 600 V CoolMOS™ S7 devices with active bridge circuit fulfills the Titanium® requirement at the lowest cost. Operating expenses (OPEX) and capital expenditures (CAPEX) are both reduced through simplified topologies and the power density in the server PSU is doubled.

In applications with low output voltage and high output current, further efficiency improvements are enabled by the continuous reduction of on-resistance. This can be achieved by using Infineon's low-voltage OptiMOS™ MOSFET series in the synchronous rectification stage. Infineon's low-voltage products are complemented by StrongIRFET™ devices that are optimized for lower switching frequencies and highest system robustness. Infineon's EiceDRIVER™ gate-driver IC family perfectly matches the CoolGaN™ and CoolSiC™ wide bandgap products, and CoolMOS™ and OptiMOS™ MOSFET products.

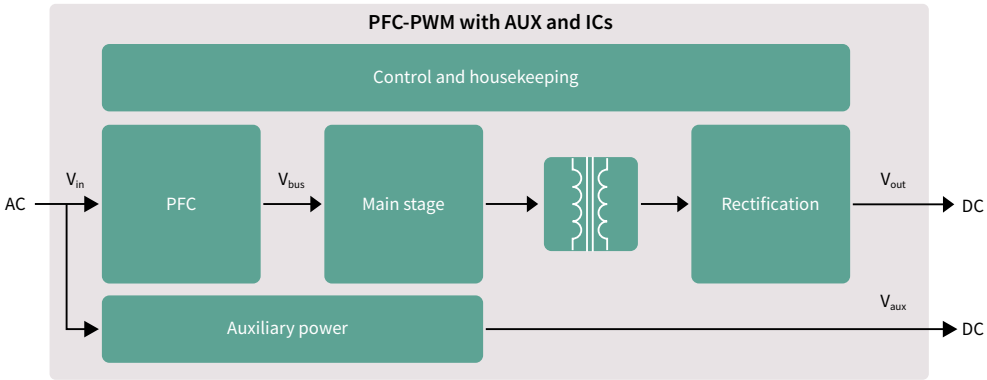

For more details on the product, click on the part number or contact our product support.

Recommended products

Functional block	Product category	Topology	Product family	Benefits
PFC	High-voltage MOSFETs	CCM/interleaved PFC; TTF	600 V/650 V CoolMOS™ C7 650 V CoolMOS™ G7 600 V CoolMOS™ S7	› Best FOM $R_{DS(on)}$ *Q_G and $R_{DS(on)}$ *E_{oss} › Lowest $R_{DS(on)}$ per package › Low dependency of switching losses form $R_{g,ext}$
	High-voltage SiC MOSFET	Totem-pole PFC	CoolSiC™ 650 V	› Highest power handling capability › Highest temperature handling
	High-voltage GaN	Totem-pole PFC	CoolGaN™ 600 V	› Enable the highest efficiency and highest power density
	SiC diodes	CCM/interleaved PFC	CoolSiC™ Schottky diode 650 V G5	› Low FOM V_F *Q_G
	Control ICs	CCM PFC ICs	ICE3PCS0xG	› Ease of use
	GaN gate-driver ICs	Totem-pole PFC	EiceDRIVER™ 1EDF5673F and 1EDF5673K	› Negative V_{GS} voltage to avoid false triggering › Differential output for GIT technology based GaN driving
	SiC MOSFET gate-driver ICs	Totem-pole PFC	EiceDRIVER™ 2EDF9275F/1EDB9275F*	› 37 ns/45 ns typical propagation delay time › Functional isolation 1.5 kV
	Gate-driver ICs	Interleaved PFC	EiceDRIVER™ 2EDN852x / 1EDN8511B EiceDRIVER™ 1EDN8550B for Kelvin source CoolMOS™	› Source and sink driver capability: - 5 A for 2EDN - 4 A/8 A for 1EDN › 17 nS (45 ns for 1EDN8550B) propagation delay precision for fast MOSFET and GaN switching › (-)10 V input robustness (1EDN8550B has true differential inputs for ground-shift robustness CMR up to ±150 V)
			EiceDRIVER™ low side: 2ED24427N01F	› Dual-channel, 10 A low-side driver in DSO-8 with power-pad › Integrated UVLO protection and enable (EN) function › High frequency, high power operation w/BOM savings
		Totem-pole PFC	EiceDRIVER™ level-shift: 2ED2181S06F, 2ED21814S06J	› 650 V half-bridge SOI driver with integrated bootstrap diode › Superior –VS transient voltage immunity › High frequency switching (500 kHz)
			EiceDRIVER™ level-shift: IRS2186S, IRS21864S	› 4 A/ 4 A high- and low-side gate driver
			EiceDRIVER™ Compact: 1EDI60N12AF, 1ED3124MU12F	› Isolated gate driver, up to 14 A, 100 ns propagation delay
		Boost PFC	EiceDRIVER™ low side: 1ED44173N01B	› Single-channel with fast, accurate (+/- 5%), integrated overcurrent protection (OCP)
Main stage	High-voltage MOSFETs	ITTF	600 V CoolMOS™ C7/P6	› Fast switching speed for improved efficiency and thermals › Low gate charge for enhanced light-load efficiency and low power consumption at no-load condition › Optimized V_{GS} threshold for lower turn-off losses › Rugged body diode which prevents device failure during hard commutation
		LLC, half-bridge below 1 kW	600 V CoolMOS™ P7, CFD7	› Low turn-off losses › Low Q_{oss} › Low Q_G
		LLC, phase shift full-bridge below 1 kW	600 V CoolMOS™ CFD7, 650 V CoolMOS™ CFD2	› Fast and rugged body diode › Optimized low Q_G and soft commutation behavior to reach highest effciency › Highest reliability for 650 V V_{DS}
		ZVS PS FB, LLC, TTF	650 V TRENCHSTOP™ IGBT F5	› Improved ruggedness and high efficiency in low inductance designs
	Control ICs	HB LLC ICs	ICE1HS01G-1 ICE2HS01G	› High efficiency and low EMI
	Gate-driver ICs	LLC, ZVS phase-shift full-bridge, TTF	EiceDRIVER™ Compact: 1EDI60N12AF, 1ED3124MU12F	› Isolated gate driver, up to 14 A, 100 ns propagation delay
			EiceDRIVER™ 2EDS8165H, 2EDS8265H	› 37 ns typical propagation delay time › Reinforced (safe) isolation 6 kV, CMTI > 150 V/ns
			EiceDRIVER™ 2EDN8524F with pulse transformer	› 5 A source and sink driver capability › 17 nS propagation delay precision for fast MOSFET and GaN switching
			EiceDRIVER™ low side: 2ED24427N01F with pulse transformer	› Dual-channel, 10 A low-side driver in DSO-8 with power-pad › Integrated UVLO protection and enable (EN) function › High frequency, high power operation w/BOM savings
			EiceDRIVER™ level-shift: 2ED2181S06F, 2ED21814S06J	› 650 V half-bridge SOI driver with integrated bootstrap diode › Superior –VS transient voltage immunity › High frequency switching (500 kHz)
			EiceDRIVER™ level-shift: IRS2186S, IRS21864S	› 4 A/ 4 A high- and low-side gate driver
Sychronous rectification	Low-voltage MOSFETs	HB LLC and center tap	OptiMOS™ 40 V	› High efficiency over whole load range, layout tolerance
		ITTF	OptiMOS™ 60 V	› High efficiency, low thermals, low V_{DS} overshoot
		ZVS PS FB and center tap	OptiMOS™ 80 V	› High efficiency over whole load range, low V_{DS} overshoot and oscillations
	Gate-driver ICs	Synchronous rectification	EiceDRIVER™ 2EDF7275K/2EDF7235K 2EDL811x / 2EDL801x for bridge rectifier	› EiceDRIVER™ 2EDF72x5K › Functional isolation up to 650 V_{DC} channel-to-channel isolation › Compact solution available in LGA-13 5x5 mm package › EiceDRIVER™ 2EDL8x1x › Level-shift half-bridge gate driver up to 120 V isolation
			Low side: EiceDRIVER™ 2EDN75xx / 2EDN85xx, 1EDN751x / 1EDN8511B	› 5 A source and sink driver capability for 2EDN (4A/8A for 1EDN) › 17/19 nS propagation delay precision for fast MOSFET and GaN switching › (-)10 V input robustness
			EiceDRIVER™ low side: 2ED24427N01F	› Dual-channel, 10 A low-side driver in DSO-8 with power-pad › Integrated UVLO protection and enable (EN) function › High frequency, high power operation w/BOM savings
			EiceDRIVER™ level-shift: 2ED2181S06F, 2ED21814S06J	› 650 V half-bridge SOI driver with integrated bootstrap diode › Superior –VS transient voltage immunity › high frequency switching (500 kHz)
			EiceDRIVER™ level-shift: IRS2186S, IRS21864S	› 4 A/ 4 A high- and low-side gate driver
			EiceDRIVER™ 1EDNx550B	› True differential inputs for ground shift robustness CMR up to +/-150 V
Auxiliary power supply	Control ICs	QR/FF flyback CoolSET™	800 V – ICE2QRxx80(Z)(G), ICE3xRxx80J(Z)(G) 700 V ICE5QRxx70A(Z)(G) 800 V ICE5QRxx80A(Z)(G) 800 V ICE5QRxx80BG	› Low standby power, high efficiency and robustness › An integrated 700 V/800 V superjunction power MOSFET with avalanche capability › Burst mode entry/exit to optimize standby power at different low load conditions
Housekeeping	Microcontrollers	-	XMC1xxx	› Flexibility, HR PWM, digital communication › Arm®-based standard MCU family and wide family
Conversion	Microcontrollers	-	XMC4xxx	› Flexibility, HR PWM and digital communication
PFC, PWM/resonant converter, synchro-nous rectification	Gate-driver ICs	-	EiceDRIVER™ Compact: 1EDI60N12AF, 1ED3124MU12F	› 100 ns typical propagation delay time › Functional isolation up to 14 A › Separate sink and source output
		-	EiceDRIVER™ 2EDNx	› 8 V UVLO option › -10 V input robustness › Output robust against reverse current

* Coming soon

For more details on the product, click on the part number or contact our product support.

SMPS

Full system solution for telecom power supply

The ever increasing data consumption, coupled with new levels of virtualization and complexity of the 5G telecom infrastructure, is bringing its demanding requirements into the telecom power arena. The outstanding improvements made in telecom SMPS performance in the past decade have been primarily brought by the dramatic reduction of the on resistance achieved in high voltage MOSFETs, using the revolutionary superjunction principle. This principle was introduced by Infineon at the end of the nineties with the CoolMOS™ series.

To achieve the current demanding, flat energy efficiency targets, it has been increasingly popular to employ synchronous rectification utilizing the unique performance of medium-voltage OptiMOS™ power MOSFETs. OptiMOS™ power MOSFET family, which has gained terrific popularity in DC-DC brick solutions, coupled with gate-driver ICs and microcontrollers efficiently powers the BBUs, RRUs and AAUs of the macro and the small cells.

Infineon's wide bandgap technologies, such as CoolGaN™ 600 V (gallium-nitride-based) and CoolSiC™ 650 V (silicon-carbide-based) for primary side and upcoming CoolGaN™ 100 V/200 V* for synchronous rectification, complement the wide portfolio of silicon-based switches, enabling highest electrical conversion efficiency and robustness at attractive system costs. Infineon's EiceDRIVER™ gate driver IC family perfectly matches the CoolGaN™ and CoolSiC™ wide bandgap products, and CoolMOS™ and OptiMOS™ MOSFET products.

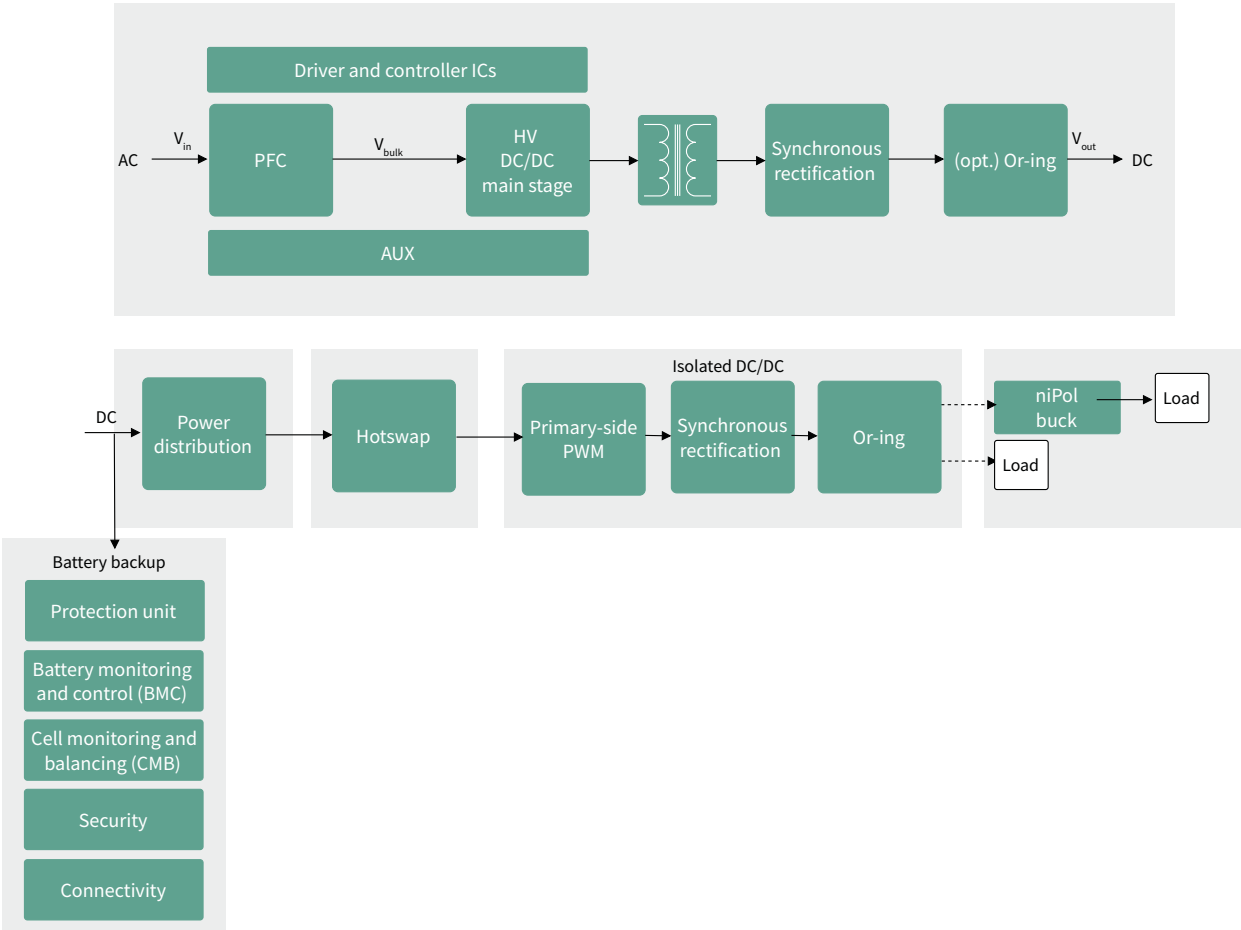

* in development

Recommended products

Functional block	Product category	Topology	Product family	Benefits
PFC	High-voltage MOSFETs	CCM/interleaved Dual-boost PFC	600 V/650 V CoolMOS™ C7	› Best FOM $R_{DS(on)}$ *Q_G and $R_{DS(on)}$ *E_{oss} › Lowest $R_{DS(on)}$ per package › Low dependency of switching losses form $R_{g,ext}$
			600 V CoolMOS™ P7	› Low turn-off losses › Low Q_{oss} › Low Q_G
			650 V TRENCHSTOP™ 5 IGBT H5 650 V TRENCHSTOP™ 5 IGBT S5	› Best trade-off between switching and conduction losses › Low gate charge Q_G › High current density
	High-voltage GaN	CCM totem pole	CoolGaN™ 600 V	› Switching at high frequencies (> Si) › Enables high power density
	High-voltage SiC MOSFET	Totem-pole PFC	CoolSiC™ 650 V 600 V CoolMOS™ S7	› Enable very high efficiency with ease of use › S7 offers the lowest $R_{DS(on)}$ MOSFET for bride rectifier
	SiC diodes	CCM/interleaved PFC Dual-boost PFC	CoolSiC™ Schottky diode 650 V G6	› Low FOM V_F *Q_C
	Control ICs	CCM PFC ICs	800 V – ICE3PCS0xG	› High PFC and low THD
	GaN gate-driver ICs	Totem-pole PFC	EiceDRIVER™ 1EDF5673F and 1EDF5673K	› Negative V_{GS} voltage to avoid false triggering › Differential output for GIT technology based GaN driving › CMTI > 200 V/ns
	SiC MOSFET gate-driver ICs	Totem-pole PFC	EiceDRIVER™ 2EDF9275F/1EDB9275F	› 37 ns/45 ns typical propagation delay time › Functional isolation 1.5 kV › CMTI > 150 V/ns
	Gate-driver ICs	Totem-pole PFC	EiceDRIVER™ 2EDFx275F/1EDBx275F	› 37 ns/45 ns typical propagation delay time › Functional isolation 1.5 kV › CMTI > 150 V/ns
			EiceDRIVER™ Compact: 1EDI60N12AF, 1ED3124MU12F	› Isolated gate driver, up to 14 A, 100 ns propagation delay
			EiceDRIVER™ level-shift: 2ED2304S06F, 2EDL23N06PJ, 2ED2182S06F	› Integrated bootstrap diode using Infineon SOI technology, low level-shift loss › Excellent ruggedness against negative transient voltages on VS pin
		Interleaved dual-boost PFC	EiceDRIVER™ 2EDN852x/1EDN851x	› 5 A source and sink driver capability for 2EDN › 8 A sink and 4 A source driver capability for 1EDN › 17 ns propagation delay precision for fast MOSFET and GaN switching
			EiceDRIVER™ 1EDN8550B for Kelvin-source CoolMOS™	› 8 A sink and 4 A source driver capability › 45 ns for propagation delay precision for fast MOSFET and GaN switching › True differential inputs for ground shift robustness CMR up to +/-150 V)
			EiceDRIVER™ low side: 2ED24427N01F	› Dual-channel, 10 A low-side gate driver in PG-DSO-8 package with power-pad › UVLO and Enable (EN), high frequency, high power operation with BOM savings
DC-DC main stage	High-voltage MOSFETs	TTF, ITTF	600 V CoolMOS™ C7/P7	› Fast-switching speed for improved efficiency and thermals › Low gate charge for enhanced light load efficiency › Optimized V_{GS} threshold for lower turn-off losses › Rugged body diode which prevents device failure during hard commutation
		HB/FB LLC	600 V CoolMOS™ P7	› Low turn-off losses › Low Q_{oss} › Low Q_G
		HB/FB LLC, ZVS PSFB	600 V CoolMOS™ CFD7	› Best-in-class Q_{rr} and t_{rr} level › Significantly reduced Q_G › Improved efficiency over previous CoolMOS™ fast-body-diode series
	Gate-driver ICs	HB LLC, ZVS phase-shift full-bridge	EiceDRIVER™ 2EDS8x65H	› 37 ns typical propagation delay time › Reinforced isolation 8 kVpk › CMTI > 150 V/ns
			EiceDRIVER™ 2EDN8524F with pulse transformer	› 5 A source and sink driver capability › 17 ns propagation delay precision for fast MOSFET and GaN switching › (-)10 V input robustness
			EiceDRIVER™ Compact: 1EDI60N12AF, 1ED3124MU12F	› Isolated gate driver, up to 14 A, 100 ns propagation delay
			EiceDRIVER™ level-shift: 2ED2304S06F, 2EDL23N06PJ, 2ED2182S06F	› Integrated bootstrap diode using Infineon SOI technology, low level-shift loss › Excellent ruggedness against negative transient voltages on VS pin
	Control ICs	HB LLC	ICE1HS01G-1, ICE2HS01G	› High efficiency and low EMI
	GaN gate-driver ICs	LLC, ZVS phase-shift full-bridge	EiceDRIVER™ 1EDS5663H	› Negative V_{GS} voltage to avoid false triggering › Differential output for GIT technology based GaN driving › CMTI > 200 V/ns
	GaN e-mode HEMTs	LLC, ZVS phase-shift full-bridge	CoolGaN™ 600 V	› Enables the highest efficiency and highest power density
Synchronous rectification	Low-voltage MOSFETs	Synchronous rectification MOSFET	OptiMOS™ 80-200 V	› Industry's lowest FOM ($R_{DS(on)}$ *Q_G) leading to high efficiency at good price/performance › Low voltage overshoots enabling easy design-in › Industry's lowest $R_{DS(on)}$ › Highest system efficiency and power density › Outstanding quality and reliability › Reduces the need for a snubber circuit
	Gate-driver ICs	Synchronous rectification	EiceDRIVER™ 2EDF7275K	› Functional isolation up to 650 V_{DC} channel-to-channel isolation › Compact solution available in LGA-13 5x5 mm package
			EiceDRIVER™ 2EDL811x / 2EDL801x	› Level-shift half-bridge gate driver up to 120 V isolation
			Low side: EiceDRIVER™ 2EDN75xx / 2EDN85xx, 1EDN751x / 1EDN851x	› 5 A Source and Sink driver capability for 2EDN › 8 A sink and 4 A source driver capability for 1EDN › 17/19 ns propagation delay precision for fast MOSFET and GaN switching › (-)10 V input robustness
			EiceDRIVER™ level-shift: IRS2186S, IRS21864S	› 4 A/ 4 A high- and low-side gate driver
			EiceDRIVER™ low side: 2ED24427N01F	› Dual-channel, 10 A low-side gate driver in PG-DSO-8 package with power-pad › UVLO and Enable (EN), high frequency, high power operation with BOM savings
Auxiliary power supply	Control ICs	5th generation QR/FF flyback CoolSET™	QR 800 V - ICE5QRxx80BG FF 800 V - ICE5xRxx80AG	› Quasi-resonant-switching operation for high efficiency and low EMI signature › Fixed-frequency-switching operation for ease of design – 100 KHz and 125 KHz › Fast and robust start-up with cascode configuration › Robust protection with adjustable line input overvoltage protection, V_{CC} and CS pin short-to-ground protection › Optimized light-load efficiency with selectable burst mode entry/exit profile › Frequency reduction for mid- and light-load condition to reduce switching losses and increase efficiency › Direct feedback and regulation with integrated error amplifier for non-isolated output › High power delivery of up to 42 W with 800 V CoolSET™ in heatsink-free SMD package
Housekeeping	Microcontrollers	-	XMC1xxx	› Flexibility, HR PWM, digital communication › Arm®-based standard MCU family and wide family
Conversion	Microcontrollers	-	XMC4xxx	› Flexibility, HR PWM, digital communication › Arm®-based standard MCU family and wide family
Isolated DC-DC	Microcontrollers	-	XDPP1100	› Optimized for 48 V telecom isolated conversion › Highly flexible digital core › State-of-the-art dedicated AFE › State-machine based fast loop control › Pre-programmed peripherals in ROM › Negligible internal power consumption › Industry smallest digital power controller

*For more information on the product, contact our product support

The list of recommended products continues on the next page.

For more details on the product, click on the part number or contact our product support.

Recommended products

Functional block	Product category	Topology	Product family	Benefits
Or-ing	Low-voltage MOSFETs	Or-ing MOSFET	OptiMOS™ 60-200 V	› Industry's lowest FOM ($R_{DS(on)}$ *Q_G) leading to high efficiency at good price/performance › Low-voltage overshoots enabling easy design-in
Battery protection	Low-voltage MOSFETs	Back-to-back disconnect	OptiMOS™ 80-200 V StrongIRFET™ 80-200 V	› Industry's lowest Low $R_{DS(on)}$ › Wide SOA › Perfect match of robust and excellent price/performance
	Microcontroller	-	PSoC 4	› 32-bit MCU Subsystem › 48-MHz Arm® Cortex®-M0+ CPU › Flash: Up to 256KB flash › RAM: 32KB SRAM › Up to 2 CAN › USB/ Up to 4 serial Channels
	Current sensing	Coulomb count	TLI4971	› Ultralow-power loss due to minimal resistance of the current rail › Reliable current measurement over the lifetime (no re-calibration) › Functional isolation for high-voltage application › Easy and compact package allows high power density design
	Battery management IC	Cell monitoring	TLE9012	› Robust communication without the need of transformers or common-mode chokes › Best in class voltage measurement accuracy even after soldering thanks to stress sensor technology › Integrated diagnosis easing functional safety design › Integrated UART communication for systems with a microcontroller on local ground
	Small signal N/P channel MOSFET	Cell balancing	OptiMOS™ 20-30 V StrongIRFET™ 20-30 V	› Wide range of packages › Suitable for space constraints › Suitable equalizing current between 0.5 A to 2.5 A › Compact solution with smaller PCB footprint
	Communication	-	Lin CAN	› Low quiescent current › ISO11898 compliant › Excellent EMI performance › Standby / sleep mode › Wake and failure detection › High ESD robustness
	Security	-	OPTIGA™ Trust M	› High-end CC EAL6+ (high) certified security controller: ECC, RSA®, AES, SHA, TLS, HKDF › Full turnkey solution › Host code with an abstraction layer › Customer-specific certificate provided for zero-touch provisioning
Isolated DC-DC	Low-voltage MOSFETs	Primary-side PWM MOSFET	OptiMOS™ 60-200 V StrongIRFET™ 60-200 V Small signal MOSFETs 60-200 V	› Industry's lowest $R_{DS(on)}$ › Highest system efficiency and power density › Outstanding quality and reliability › Reduces the need for a snubber circuit
		Synchronous-rectification MOSFET	OptiMOS™ 40-100 V StrongIRFET™ 40-100 V	
		Or-ing MOSFET	OptiMOS™ 25-30 V StrongIRFET™ 25-30 V	
		Active snubber	OptiMOS™ Power MOSFET 60 V/100 V/150 V	

Advanced system solutions for transportation and infrastructure

- Fast EV charging
- E-mobility
- Light electric vehicles and forklift

EV charger

Fast EV charging

Advanced solutions for DC EV charging

As e-mobility increasingly becomes part of daily life, there is a growing need for more efficient charging solutions. Fast electric vehicle (EV) charging stations equipped with powerful DC chargers are the answer. DC EV chargers are an attractive choice because they allow much faster charging than the standard AC EV ones that many EV owners have at home. Today, a DC charger with 150 kW can put a 200 km charge on an EV in around 15 minutes. As fast charging and battery technologies continue to evolve and improve in the near future, experts anticipate the charging time to drop even further.

As a market leader and the global front-runner in power electronics, Infineon enables you to bring energy-efficient DC EV charger designs to life, with our highly efficient components and in-depth technical support. We cover power ranges from kilowatts to megawatts in our broad portfolio of high-quality power semiconductors, microcontrollers, gate drivers, security, safety, and authentication solutions. Our CoolMOS™ and CoolSiC™ MOSFETs, together with EiceDRIVER™ gate drivers, for example, are ideal in a wide range of DC EV charging designs. Their matchless advantages include high-frequency operation, high power density and reduced switching losses, allowing you to reach high efficiency levels in any battery charging system.

Infineon offering and customer benefits

Infineon offering	Customer benefits
› CoolMOS™ and CoolSiC™ discrete and power module semiconductor solutions	› Highly efficient power conversion for reducing system size by up to 50 percent and reduced cooling efforts › Scalability across various platforms for upgrading system power charger levels on demand
› EiceDRIVER™ gate driver and XMC™ microcontroller	› Safe drive, advanced protection and ease of control
› XENSIV™ magnetic current sensor	› Bidirectional high precision current sensing
› OPTIGA™	› Identity protection against fake devices and protection against the manipulation of the data
› Power supply ICs (LDO, DC-DC) › Communication (CAN transceiver)	› Robust quality and easy to use implementation shorten time to market › and guarantee long operation

Application diagram

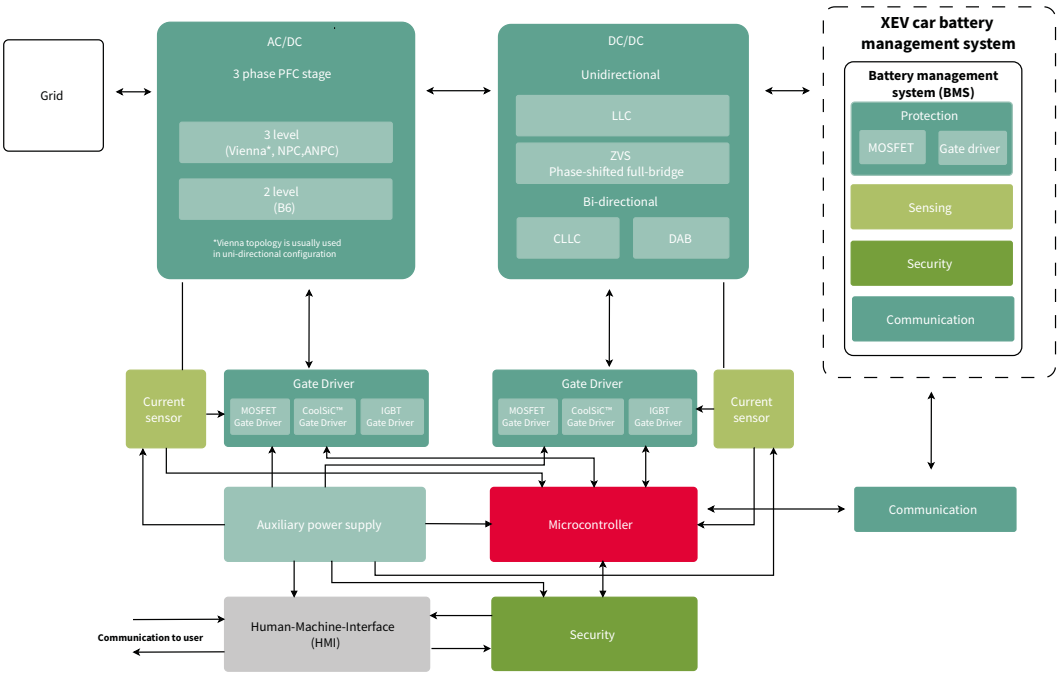

Infineon's solution recommendation for DC EV charging system blocks

Our solutions have been designed for harsh environmental conditions and long lifetime thanks to Infineon's deep understanding of quality requirements. Take the next step by exploring our product portfolio for DC EV charging systems.

PFC stage (three-phase input)

Product category	Product family	Product	Additional information
High-voltage MOSFET/ SiC MOSFET/IGBT	650 V CoolMOS™ C7	IPW65R019C7	650 V, 19 mΩ, TO-247
	600 V CoolMOS™ C7	IPW60R017C7	600 V, 17 mΩ, TO-247
	600 V CoolMOS™ P7	IPW60R024P7	600 V, 24 mΩ, TO-247
		IPW60R037P7	600 V, 37 mΩ, TO-247
	CoolSiC™ MOSFET 650 V	IMW65R027M1H	650 V, 27 mΩ, TO-247-3
		IMZ65R027M1H	650 V, 27 mΩ, TO-247-4
		IMWA65R027M1H	650 V, 48 mΩ, TO-247-3
		IMZA65R027M1H	650 V, 48 mΩ, TO-247-4
	650 V TRENCHSTOP™ 5 H5	IKW50N65EH5/IKZ50N65EH5	650 V, 50 A, TO-247-3/4
		IKW75N65EH5/IKZ75N65EH5	650 V, 75 A, TO-247-3/4
	650 V HighSpeed H3 Easy hybrid module	FS3L50R07W2H3F_B11	650 V, 50 A, Easy 2B, three-level
	650 V TRENCHSTOP™ 5 H5 Easy hybrid module	FS3L40R07W2H5F_B11	650 V, 40 A, Easy 2B, three-level
		FS3L40R07W2H5F_B67	650 V, 40 A, Easy 2B, three-level
	650 V TRENCHSTOP™ 5 S5 Easy hybrid module	F3L200R07W2S5FP_B55	650 V, 200 A, Easy 2B, three-level
		F3L200R07W2S5FP_B56	650 V, 200 A, Easy 2B, three-level
		F3L200R07W2S5F_B11	650 V, 200 A, Easy 2B, three-level
	650 V TRENCHSTOP™ 5 S5 Easy module	F3L200R07W2S5_B11	650 V, 200 A, Easy 2B, three-level
	CoolSiC™ MOSFET 1200 V	IMW120R045M1/IMZ120R045M1	1200 V, 45 mΩ, TO-247-3/4
	CoolSiC™ Easy modules 1200 V	F3L11MR12W2M1_B74	1200 V, 11 mΩ, Easy 2B, ANPC
		FF6MR12W2M1(P)_B11 *	1200 V, 6 mΩ, Easy 2B, half-bridge
		FF8MR12W2M1(P)_B11 *	1200 V, 8 mΩ, Easy 2B, half-bridge
		FF11MR12W1M1(P)_B11 *	1200 V, 11 mΩ, Easy 1B, half-bridge
		FF23MR12W1M1(P)_B11 *	1200 V, 23 mΩ, Easy 1B, half-bridge
		FS45MR12W1M1_B11	1200 V, 45 mΩ, Easy 1B, six-pack
SiC diodes	CoolSiC™ Schottky diodes 1200 V G5	IDW15G120C5B/IDWD15G120C5	1200 V, 15 A, TO-247-3/2
		IDW20G120C5B/IDWD20G120C5	1200 V, 20 A, TO-247-3/2
		IDW30G120C5B/IDWD30G120C5	1200 V, 30 A, TO-247-3/2

For more details on the product, click on the part number or contact our product support.

HV DC-DC main stage

Product category	Product family	Product	Additional information
High-voltage MOSFET/ SiC MOSFET	600 V CoolMOS™ CFD7 / CSFD	IPW60R018CFD7	600 V, 18 mΩ, TO-247
		IPW60R024CFD7	600 V, 24 mΩ, TO-247
		IPW60R037CSFD	600 V, 37 mΩ, TO-247
		IPW60R040CFD7	600 V, 40 mΩ, TO-247
	600 V CoolMOS™ C7	IPW60R040C7	600 V, 40 mΩ, TO-247
	650 V CoolMOS™ CFD7	IPW65R018CFD7 * / IPZA65R018CFD7	650 V, 29 mΩ, TO-247-3/4
		IPW65R029CFD7 / IPZA65R029CFD7	650 V, 29 mΩ, TO-247-3/4
		IPW65R041CFD7	650 V, 41 mΩ, TO-247
	CoolSiC™ SiC MOSFET 650 V	IMW65R027M1H / IMZA65R027M1H	650 V, 27 mΩ, TO-247-3/4
		IMW65R048M1H / IMZA65R048M1H	650 V, 48 mΩ, TO-247-3/4
	CoolSiC™ SiC MOSFET 1200 V	IMW120R045M1/IMZ120R045M1	1200 V, 45 mΩ, TO-247-3/4
	CoolSiC™ Easy module 1200 V	FF6MR12W2M1(P)_B11 *	1200 V, 6 mΩ, Easy 2B, half-bridge
		FF8MR12W2M1(P)_B11 *	1200 V, 8 mΩ, Easy 2B, half-bridge
		FF11MR12W1M1(P)_B11 *	1200 V, 11 mΩ, Easy 1B, half-bridge
		FF23MR12W1M1(P)_B11 *	1200 V, 23 mΩ, Easy 1B, half-bridge
		FF45MR12W1M1(P)_B11 *	1200 V, 45 mΩ, Easy 1B, half-bridge
		F4-45MR12W1M1(P)_B76 *	1200 V, 45 mΩ, Easy 1B, four-pack
		F4-23MR12W1M1(P)_B76 *	1200 V, 23 mΩ, Easy 1B, four-pack
		F4-15MR12W2M1(P)_B76 *	1200 V, 15 mΩ, Easy 2B, four-pack
		F4-11MR12W2M1(P)_B76 *	1200 V, 11 mΩ, Easy 2B, four-pack
		FS45MR12W1M1_B11	1200 V, 45 mΩ, Easy 1B, sixpack
SiC diodes Output rectification diodes	CoolSiC™ Schottky diode 1200 V G5	IDW15G120C5B/IDWD15G120C5	1200 V, 15 A, TO-247-3/2
		IDW20G120C5B/IDWD20G120C5	1200 V, 20 A, TO-247-3/2
		IDW30G120C5B/IDWD30G120C5	1200 V, 30 A, TO-247-3/2
	CoolSiC™ Schottky diode 1200 V G5 rectifier bridge modules	DDB2U20N12W1RF(P)_B11 *	1200 V, 20 A, Easy 1B, rectifier bridge
		DDB2U40N12W1RF(P)_B11 *	1200 V, 40 A, Easy 1B, rectifier bridge
		DDB2U60N12W1RF(P)_B11 *	1200 V, 60 A, Easy 1B, rectifier bridge
	CoolSiC™ Schottky diode 650 V G5	IDW12G65C5	650 V, 12 A, TO-247
		IDW16G65C5	650 V, 16 A, TO-247
		IDW20G65C5	650 V, 20 A, TO-247
		IDW20G65C5B	650 V, 10 A, TO-247
		IDW24G65C5B	650 V, 24 A, TO-247
		IDW30G65C5	650 V, 30 A, TO-247
		IDW32G65C5B	650 V, 32 A, TO-247
		IDW40G65C5	650 V, 40 A, TO-247
		IDW40G65C5B	650 V, 40 A, TO-247
	CoolSiC™ Schottky diode 650 V G6	IDH20G65C6	650 V, 20 A, TO-220
		IDH16G65C6	650 V, 16 A, TO-220 real 2-pin
		IDH12G65C6	650 V, 12 A, TO-220 real 2-pin
		IDH10G65C6	650 V, 10 A, TO-220 real 2-pin
		IDH08G65C6	650 V, 8 A, TO-220 real 2-pin
		IDH06G65C6	650 V, 6 A, TO-220 real 2-pin
		IDH04G65C6	650 V, 4 A, TO-220 real 2-pin
		IDDD20G65C6	650 V, 20 A, Double DPAK
		IDDD16G65C6	650 V, 16 A, Double DPAK
		IDDD12G65C6*	650 V, 12 A, Double DPAK
		IDDD10G65C6	650 V, 10 A, Double DPAK
		IDDD08G65C6	650 V, 8 A, Double DPAK
		IDDD06G65C6	650 V, 6 A, Double DPAK
		IDDD04G65C6	650 V, 4 A, Double DPAK

(P): Module with pre-applied thermal interface material (TIM)

* For more information on the product, contact our product support

For more details on the product, click on the part number or contact our product support.

Gate driver and galvanic isolation

Product category	Product family	Product	Additional information
Gate-driver ICs	EiceDRIVER™ (non-isolated)	1EDN family, 2EDN family	› Single-channel/dual-channel, non-isolated low-side gate driver ICs
		1ED4417xN01B	› Single-channel with fast, accurate (+/- 5%), integrated overcurrent protection (OCP)
		2ED24427N01F	› Dual-channel, 10 A low-side gate driver in DSO-8 package with power-pad › Integrated UVLO and enable (EN) function › Suitable for high frequency, high power operation w/BOM savings
	EiceDRIVER™ level-shift gate driver	2ED2184S06F 2ED2110S06M	› 650 V half-bridge gate driver for IGBTs and MOSFETs with SOI technology › Integrated bootstrap diode › High-frequency switching (500 kHz) and superior –VS transient voltage immunity
		IRS2186S, IRS21864S	› 600 V, 4 A high- and low-side gate driver
		IR2114SS, IR2214SS	› 600 V/1200 V half-bridge gate driver with DESAT, 2L SRC, soft-SD
		IR2213S	› 1200 V high- and low-side gate driver
	EiceDRIVER™ 2EDF/S isolated gate driver	2EDF7175F, 2EDF7275F	› Dual-channel functional isolated (1,5 kV)
		2EDS8265H, 2EDS8165H	› Dual-channel reinforced (safe) isolated (6 kV)
	EiceDRIVER™ Compact isolated gate driver	1EDI20I12MF, 1EDI20N12AF, 1EDI60N12AF, 1EDI60I12AF	› 1200 V single-channel, cost-effective functional isolated driver with Miller clamp / separate output
		1ED3122MU12H, 1ED3124MU12H, 1ED3125MU12F, 1ED3124MU12F	› 5.7 kV / 3 kV single-channel isolated driver with Miller clamp or separate output, UL 1577 certification
	EiceDRIVER™ Enhanced isolated gate driver	1ED3491MU12M, 1ED3890MU12M	› 5.7 kV single-channel isolated driver with analog/digital configurability, DESAT, Miller clamp, and Soft-off, UL 1577 certification
		1ED020I12-F2, 2ED020I12-F2	› 1200 V, single-/dual-channel, functional isolated driver with DESAT and Miller clamp

Current sensor

Product category	Product family	Product	Additional information
Magnetic current sensor	XENSIV™	TLI4971-A120T5-E0001	–
		TLI4971-A120T5-U-E0001	**UL certified**

Microcontroller

Product category	Product family	Product	Additional information
Microcontroller	XMC™	XMC1400 family (PFC stage)	Arm® Cortex® M0 based microcontroller
		XMC4500/XMC4700 (HV DC-DC/PWM stage)	Arm® Cortex® M4F based microcontroller
	AURIX™	TC26X/TC27X TC36X/TC37X	TriCore™ AURIX™ 32-bit microcontroller HSM (hardware secure module) full EVITA compliance

Internal power supply

Product category	Product family	Product	Additional information
AC-DC power conversion	CoolSET™ 5 QR/FF flyback	ICE5QR0680AG	800 V, 42 W, 710 mΩ, PG-DSO-12
		ICE5AR0680AG	800 V, 42 W, 710 mΩ, PG-DSO-12
	5th generation PWM controllers and CoolMOS™ P7	ICE5QSBG and IPP80R360P7	800 V, 360 mΩ, TO-220
		ICE5QSBG and IPA95R450P7	950 V, 450 mΩ , TO-220 FP
	CoolMOS™ HV SJ MOSFETs	IPN95R1K2P7	950 V, 450 mΩ, SOT-223
		IPN80R1K4P7	800 V, 1.4 Ω, SOT-223
DC-DC power conversion	Low power LDOs	TLS805 / TLS810	50 mA/100 mA ultralow quiescent current linear voltage regulator with a wide input voltage range
		TLS202	150 mA LDO in a small-footprint package
		TLS203 / TLS205	300/500 mA low noise LDO
		TLS850B	500 mA wide input voltage LDO
	Buck converter	TLE8366E	1.9 A DC-DC buck converter
	Safety PMIC for AURIX™ MCU	TLF35584	Multichannel power supply IC, optimized for AURIX™ MCU, up to ASIL-D rated

* For more information on the product, contact our product support

For more details on the product, click on the part number or contact our product support.

Authentication and encryption

As embedded systems are increasingly becoming targets of attackers, Infineon offers OPTIGA™ - a turnkey security solution.

Product category	Product family	Product	Additional information
Security	OPTIGA™ Trust B	SLE952500000XTSA1	Asymmetric ECC authentication with individual certificate key pair and an extended temperature range of -40 to 110°C
	OPTIGA™ Trust TPM	SLB9670XQ2.0 *	Fully TCG TPM 2.0 standard compliant module with the SPI interface
	SLC37	SLC37ESA2M0, SLI97CSIFX1M00PE *	New class of performance and security cryptocontroller adhering to CC EAL6+ high targeted and EMVCo targeted certifications for payment and eSIM applications

Communication

Product category	Product family	Product	Additional information
CAN transceiver	Automotive CAN transceiver	TLE9250SJ	Automotive-grade high-speed CAN-FD transceiver with 5 Mbps, certified to ISO11898-5 in DSO-8 package
		TLE9250LE	Automotive-grade high-speed CAN-FD transceiver with 5 Mbps, certified to ISO1189- 5 in TSON-8 package

E-mobility

Best solutions for electrified powertrain in XEV applications: on-board chargers, HV/LV DC-DC converter, wireless charging battery management

The electrification of the powertrain enables locally emission-free mobility and driving pleasure. The needed energy is stored and delivered from a battery. Infineon's semiconductor solutions do not only enable core functionalities in the electrification but also extend the driving range, reduce charging times and energy transfer between the high voltage systems with the traditional 12 V domain.

On-board chargers

Every plug-in hybrid electric vehicle (PHEV) and pure electric cars are equipped with at least one on-board charger, allowing battery recharge from any standard AC power outlet. Available power depends on regional regulations and installation base, typically providing up-to 7.4 kW for PHEVs and up-to 22 kW maximum power. System designers face the challenge of supporting the varied voltage and current levels while increasing the power density. When it comes to on-board charging, the key success factors involve efficiency and a high power density for a small form factor. The long-term trend is moving towards bidirectional charging, where the charger also feeds power from the car to the smart grid.

High-voltage DC-DC converter

The architecture of electric vehicles comprises at least one low-voltage sub-network with low-voltage energy storage and multiple electrical loads and one high-voltage sub-network with high-voltage energy storage. The auxiliary HV/LV DC-DC converter's function is to enable the bidirectional energy flow between these two electrical subnets. Typical design challenges are achieving the greatest-possible efficiency and keeping the overall system costs under control. The space required for the DC-DC converter should also be kept to an absolute minimum. Infineon's portfolio is specially designed to help easily overcome these barriers.

On-board chargers: functional blocks

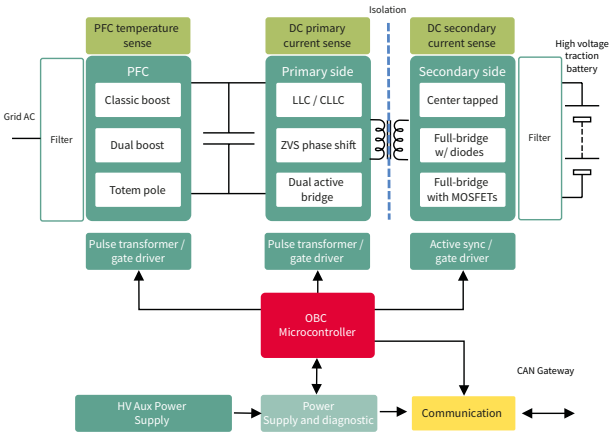

HV/LV DC-DC converter: functional blocks

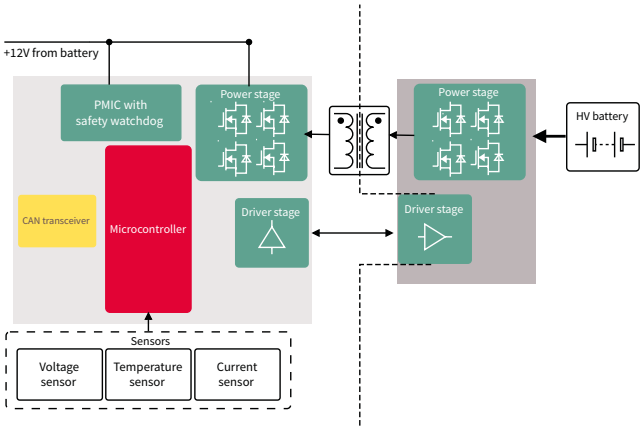

Product portfolio for on-board charger and HV/LV DC-DC applications

Infineon's comprehensive portfolio of semiconductors (sensors, microcontrollers, power semiconductors, etc.) lends itself perfectly to designs of compact units for on-board, off-board, and wireless charging. Infineon products in this sector support high switching frequencies at lowest possible on-state resistance ($R_{DS(on)}$) to enable compact and efficient designs. The power offering includes MOSFETs such as CoolMOS™, IGBTs such as TRENCHSTOP™ 5 , SiC Schottky diodes such as the CoolSiC™ diode 650 V, the CoolSiC™ Hybrid discrete (integrated IGBT and SiC Diode) and Easy module solutions. In addition, integrated MOSFET and IGBT drivers, controller ICs for active CCM PFC high-performance microcontroller solutions and highly accurate current sensors complete the product portfolio. For more information about off-board chargers, refer to Fast EV charging.

Automotive products for on-board units

Part number	Product family	Description
CoolMOS™ 650 V	IPx65RxxxCFD7A	650 V MOSFET with integrated fast body diode
TRENCHSTOP™ 5 AUTO IGBT	AIKW50N, AIKW40N, AIGW40	IGBT discrete dedicated to automotive applications
CoolSiC™1200 V	AIMW120Rx	Automotive 1200 V discrete SiC MOSFET
Level shifter	AUIRS2191S, AUIRS2113S	Automotive high and low side driver
Automotive EiceDRIVER™	2ED020I12FA	Dual-channel isolated driver for 650 V/1200 V IGBTs and MOSFETs
AURIX™ microcontroller	TC23xL,TC26xD , TX36x*, TC37X*	32-bit lockstep microcontroller
OPTIREG™ PMIC	TLF35584	ISO 26262 – system-supply optimized for AURIX™
CAN FD transceiver	TLE9250 , TLE9251	High-speed automotive CAN transceiver with 5 Mbps
Automotive system basic chips	TLE9461, TLE9471	High integrated solution for microcontroller supply and communication
OPTIREG ™ Linear	TLS810, TLS850, TLS105	Automotive linear voltage regulators
XENSIV™ current sensor	TLI4971	Coreless magnetic current sensors

Easy modules for on-board charger units

Part number	Product family	Description
CoolMOS™ Easy module 650 V	F4-35MR07W1D7S8_B11/A*	650 V MOSFET in H-bridge configuration with integrated capacitor in Easy 1B package
CoolMOS™ Easy module 650 V	F4-35MR07W2D7S8_B13/A*	650 V MOSFET in H-bridge configuration with IGBT H5, rapid diode & integrated capacitor in Easy 2B package
CoolMOS™ Easy module 650 V	F4-xxMR07WxD7_Bxx/A	650 V MOSFET in H-bridge configuration in Easy package
CoolMOS™ Easy module 650 V	FSxxMR07WxD7_Bxx/A	650 V MOSFET in SixPACK configuration in Easy package
CoolMOS™ Easy module 650 V	FFxxMR07WxD7_Bxx/A	650 V MOSFET in half-bridge configuration in Easy package
CoolSiC™ Easy module 1200 V	F4-xxMR12WxM1H_Bxx/A	1200 V SiC MOSFET in H-bridge configuration in Easy package
CoolSiC™ Easy module 1200 V	FSxxMR12WxM1H_Bxx/A	1200 V SiC MOSFET in SixPACK configuration in Easy package
CoolSiC™ Easy module 1200 V	FFxxMR12WxM1H_Bxx/A	1200 V SiC MOSFET in half-bridge configuration in Easy package

Wireless charging

Wireless methods for power transfer to charge the batteries of electric vehicles are gaining attention. Several concepts for wireless power transfer systems have been proposed, which in general seek to compensate the significant stray inductances on primary and secondary sides of the magnetic couplers by adaptive resonant methods. At the end of 2013, SAE announced a new standard for inductive charging which defined three power levels at 85 kHz. Infineon's CoolMOS ™ CFD7, C7, and P7 series along with TRENCHSTOP™ 5 IGBTs, CoolSiC™ diodes, and EiceDRIVER™ gate-driver ICs are perfectly suited for driving inductive power transfer systems on the road side which operate inside the 80 to 90 kHz band.

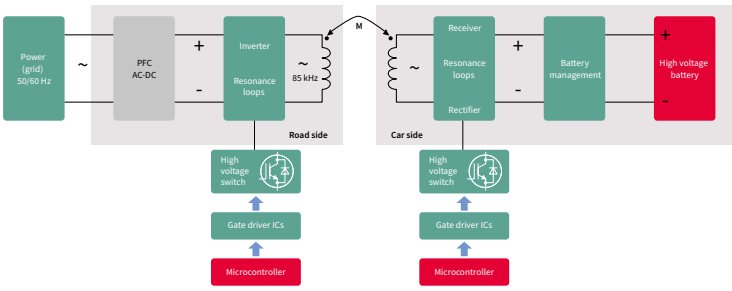

* Coming soon

Automotive products for the car side * *

Product family	Part number	Description
Automotive EiceDRIVER™	1ED020I12FA2	Single-channel isolated driver for 650 V/1200 V IGBTs and MOSFETs
Automotive EiceDRIVER™	1ED020I12FTA	Single-channel isolated driver, two-level turn-off for 650 V/1200 V IGBTs
Automotive EiceDRIVER™	2ED020I12FA	Dual-channel isolated driver for 650 V/1200 V IGBTs and MOSFETs
CoolMOS™	IPx65RxxxCFD7A	650 V MOSFET with integrated fast body diode
AURIX™	TC23xL, TC26xD	32-bit lockstep microcontroller
OPTIREG™ PMIC	TLF35584	ISO 26262 – system-supply optimized for AURIX™
CAN FD transceiver	TLE9250, TLE9251	High-speed automotive CAN transceiver with 5 Mbps
Automotive system basic chips	TLE9461, TLE9471	High integrated solution for microcontroller supply and communication
OPTIREG™ Linear	TLS810, TLS850, TLS105	Automotive linear voltage regulators

Industrial products for the road side * *

Product family	Part number	Description
CoolMOS™ CFD7 SJ MOSFET	IPW60R031CFD7	600 V MOSFET, 31 mΩ, TO-247
CoolMOS™ C7 SJ MOSFET	IPW60R040C7	600 V MOSFET, 40 mΩ, TO-247
CoolMOS™ P7 SJ MOSFET	IPW60R037P7	600 V MOSFET, 37 mΩ, TO-247
TRENCHSTOP™ 5 IGBTs	IKW40N65F5	Fast IGBT with Rapid 1 diode, 40 A, TO-247
TRENCHSTOP™ 5 IGBTs	IGW40N65F5	Fast IGBT, single, 40 A, TO-247
CoolSiC™ diode	IDW40G65C5	650 V SiC Schottky diode generation 5, 40 A, TO-247 1)
XMC™ microcontroller	XMC4000	32-bit Arm® Cortex® -M4F microcontrollers, up to 125 °C ambient temperature
Linear voltage regulators	IFX1763, IFX54441	Linear voltage regulator family with output current capability of 500 mA or 300 mA, respectively
Current sensor	TLI4970	600 V functional isolation, ± 50 A
EiceDRIVER™ SOI gate driver	2ED21xxS06F	650 V half-bridge gate driver for IGBTs and MOSFETs
EiceDRIVER™ 1ED Compact gate-driver IC	1EDxxxI12AF/MF, 1ED31xxMU12H	1200 V, single-channel, isolated driver with Miller clamp or separate output

Industrial products for the road side

Part number	Product family	Description
CoolSiC™ Easy module 1200 V	F3L11MR12W2M1_B74	1200 V SiC MOSFET in three-level configuration in Easy 2B package
CoolSiC™ Easy module 1200 V	FF45MR12W1M1(P)_B11 *	1200 V SiC MOSFET in half-bridge configuration in Easy 1B package
CoolSiC™ Easy module 1200 V	FF23MR12W1M1(P)_B11	1200 V SiC MOSFET in half-bridge configuration in Easy 1B package
CoolSiC™ Easy module 1200 V	FF11MR12W1M1(P)_B11	1200 V SiC MOSFET in half-bridge configuration in Easy 1B package
CoolSiC™ Easy module 1200 V	FF8MR12W2M1(P)_B11	1200 V SiC MOSFET in half-bridge configuration in Easy 2B package
CoolSiC™ Easy module 1200 V	FF6MR12W2M1(P)_B11	1200 V SiC MOSFET in half-bridge configuration in Easy 2B package
CoolSiC™ Easy module 1200 V	F4-45MR12W1M1(P)_B76 *	1200 V SiC MOSFET in H-Bridge configuration in Easy 1B package
CoolSiC™ Easy module 1200 V	F4-23MR12W1M1(P)_B76 *	1200 V SiC MOSFET in H-Bridge configuration in Easy 1B package
CoolSiC™ Easy module 1200 V	F4-15MR12W2M1(P)_B76 *	1200 V SiC MOSFET in H-Bridge configuration in Easy 2B package
CoolSiC™ Easy module 1200 V	F4-11MR12W2M1(P)_B76 *	1200 V SiC MOSFET in H-Bridge configuration in Easy 2B package
CoolSiC™ Easy rectifier bridge module 1200 V	DDB2U20N12W1RF(P)_B11	1200 V SiC diode in rectifier bridge configuration in Easy 1B package
CoolSiC™ Easy rectifier bridge module 1200 V	DDB2U40N12W1RF(P)_B11	1200 V SiC diode in rectifier bridge configuration in Easy 1B package
CoolSiC™ Easy rectifier bridge module 1200 V	DDB2U60N12W1RF(P)_B11	1200 V SiC diode in rectifier bridge configuration in Easy 1B package

* For more information on the product, contact our product support
* * Available in different current ratings

For more details on the product, click on the part number or contact our product support.

Welding

Light electric vehicles and forklift

e-bike, e-scooter, e-motorcycle, e-rickshaw, LSEV, e-forklift

Light electric vehicles (LEV) are increasingly becoming popular for daily commute. Started with Asia, now moving towards Europe and the Americas, the electrification of L-category (Light) vehicles (e-kick scooter, e-bike, e-scooter, e-motorcycle, e-rickshaw as well as low-speed electric vehicles (LSEV), also referred to as neighborhood EV (NEV)) are spotted all around the world. Using lithium batteries gives hardware overhaul to some of the existing designs built with lead-acid batteries. With the state-of-art battery technology, LEV manufacturers are launching premium vehicles requiring technologies that enable longer distance per charge, fast charge in various speed classes up to 100 km/hr. On the other hand, electric forklifts (class I, II, and III) function - unlike 2- and 3-wheelers and LSEVs - is to work with heavy load lifts.

The faster the LEV and the higher load a LSEV or forklift has to carry, the stronger the motor and the motor controller have to be. This requires multiple best-in-class MOSFETs with lowest on-resistance gathering together in parallel to generate sufficient power.

Infineon's industrial-grade OptiMOS™ and StrongIRFET™ MOSFETs product families and EiceDRIVER™ gate drivers consider light electric vehicles' mission profile within its qualification process. They provide industry-leading on-resistance as well as robustness against critical conditions (short circuit conditions, hard commutation ruggedness, and instantaneous peak power tolerance). Both product families come with a broad range of voltage classes spreading from 25 V to 300 V with multiple $R_{DS(on)}$ classes to choose from. OptiMOS™ devices are designed for best performance in paralleling operation while StrongIRFET™ devices have great mix between performance and robustness.

Infineon offering and customer benefits

Infineon offering	Customer benefits
› Lowest on-resistance $R_{DS(on)}$	› Highest power density and BOM cost reduction
› Lowest power consumption during operation	› Increased battery operating time
› Track record of reliability and quality	› Prolonged lifetime
› Complete portfolio	› Enabled scalability
› Complete design support with simulations, documentation and demonstration boards for high end solution available	› Shortened development cycle

Application diagram

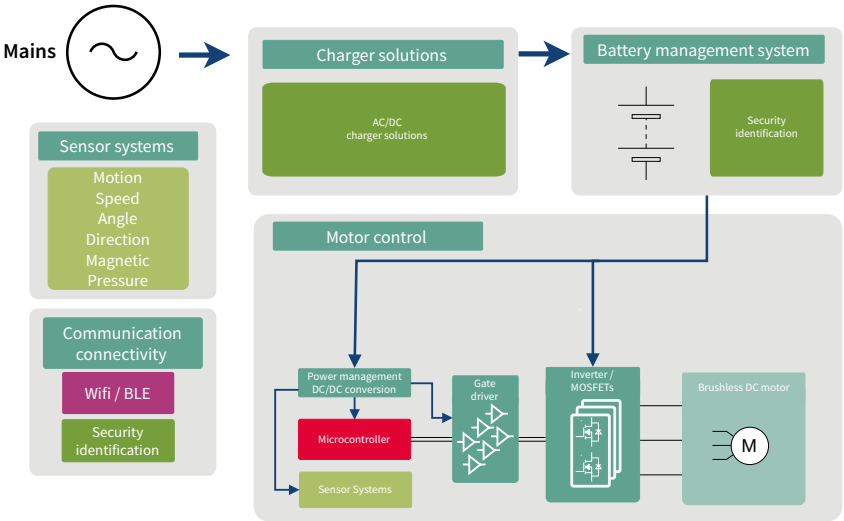

For more details on the product, click on the part number or contact our product support.

Highlight/ recommended product portfolio – e-bike and e-kick scooter (≤ 1 kW)

Functional block	Product category	Product family	Part number
Motor control	MOSFETs	OptiMOS™ power MOSFET 60 V	BSC012N06NS
			IPP020N06N
		HEXFET™ power MOSFET 60 V	IRFB7530
			IRF60DM206
		StrongIRFET™ power MOSFET 75 V	IRFB7730
		OptiMOS™ 5 power MOSFET 80 V	BSC021N08NS5
			IPP020N08N5
		OptiMOS™ 5 power MOSFET 100 V	BSC027N10NS5
			IPP023N10N5
		StrongIRFET™ power MOSFET 100 V	IRF100B201
	EiceDRIVER™ gate-driver ICs	200 V three-phase SOI driver IC with integrated bootstrap diode	6EDL04N02PR
		200 V half-bridge gate driver IC	IRS2005/7/8S, IRS2011S
		Single-channel gate driver IC	1EDN7550
	Voltage regulator	Monolithic integrated voltage regulator	IFX21004TN
	Sensors	XENSIV™ integrated Hall-effect switch	TLE4964-1M
		XENSIV™ 3D magnetic angle sensor	TLE493DW2B6Ax
	Motor control IC	iMOTION™ digital motor controller	IMC101T-F064
	Microcontrollers	3-phase bridge driver IC with Integrated Arm® Cortex® M3	TLE9877QXW40
		XMC1300 series	XMC1301-T038X0064 AB
		XMC1400 series	XMC1404-F064X0200
Battery management	MOSFETs	OptiMOS™ 5 100 V	IPTG014N10NM5
			IPT020N10N5
Safety and security	Security chip	OPTIGA™ Authenticate IDoT	SLE95405
		OPTIGA™ Connect	OC2321

Highlight/recommended product portfolio – e-scooter (> 1kW), LSEV, e-motorcycles and forklift

Functional block	Product category	Product family	Part number
Motor control	MOSFETs	OptiMOS™ 5 power MOSFET 80 V	IPB015N08N5
			IPTG011N08NM5
			IPTC012N08NM5
		OptiMOS™ 5 power MOSFET 100 V	IPB017N10N5
			IPTG014N10NM5
			IPTC015N10NM5
		IR MOSFET™ power MOSFET 100 V	IRFS4010-7P
		OptiMOS™ 5 power MOSFET 150 V	IPB048N15N5
		IR MOSFET™ power MOSFET 150 V	IRF4115
		OptiMOS™ 3 power MOSFET 200 V	IPB107N20N3 G
			IPTG111N20NM3FD
		StrongIRFET™ power MOSFET 200 V	IRF200S234
	EiceDRIVER™ gate-driver ICs	Compact isolated gate driver	1EDI60N12AF, 1ED3124MU12H
		650 V/600 V, half-bridge	2ED2304S06F, 2ED2182S06F
		200 V three-phase SOI driver IC with integrated bootstrap diode	6EDL04N02PR
		600 V single-channel high-side driver with integrated over-current protection	IRS21271S
		Single-channel gate driver IC	1EDN7550
		reinforced isolated gate driver IC	2EDS8265H, 2EDS8165H
	Voltage regulators	Monolithically integrated with dual output: 5 V and 15 V	IFX21004TN V51
		OPTIREG™ Tracker	TLS115D0EJ
	Sensor	XENSIV™ integrated Hall-effect switch	TLE4964-1M
	Microcontrollers	XC1400 series	XMC1404-F064X0200
		XC2000 series	SAK-XC2365B-40F80LR AB
		XMC4300 series	XMC4300-F100K256
Battery management	MOSFET	OptiMOS™ 5 power MOSFET 150 V	IPB048N15N5
		IR MOSFET™ power MOSFET 150 V	IRF4115
Safety and security	Security chip	OPTIGA™ Authenticate IDoT	SLE95405
		OPTIGA™ Connect	OC2321
		OPTIGA™ Trust	SLS 32AIA010ML
Air-conditioning	MOSFETs	OptiMOS™ 3 power MOSFET 200 V	IPB107N20N3 G
		StrongIRFET™ power MOSFET 200 V	IRF200S234
	Gate-driver ICs	600 V three-phase gate-driver IC for IGBTs and MOSFETs	6EDL04I06PT

For more details on the product, click on the part number or contact our product support.

20-300 V MOSFETs

- 20-300 V MOSFETs N-channel power MOSFETs technology development and product family positioning
- Guidance for applications and voltage classes
- Space-saving and high-performance packages
- Discrete packages
- Small signal/small power MOSFETs -250 to 600 V
- OptiMOS™ Source-Down power MOSFETs 25-150 V
- StrongIRFET™ 2 MOSFETs - 80 V/100 V
- TOLx family
- 20-300 V MOSFETs product portfolio
- 20-300 V MOSFETs nomenclature

Infineon shapes power for growth through MOSFET innovation

With more than 40 years of experience in power MOSFET innovation, Infineon has led the way in solving the challenges design engineers face on a daily basis while enabling them achieve their targets. Although these targets may have changed over the years, the innovative spirit behind Infineon's product offering has persisted – from device design, technology, package and product development through manufacturing. Looking at the evolution of MOSFETs in the industry, numerous advancements in MOSFET technology have enabled the applications and trends that have become an indispensable part of our lives. Infineon power MOSFET innovation has proven that optimization at the component level brings significant system-level performance advantages and contributes to an easier, safer and greener future.

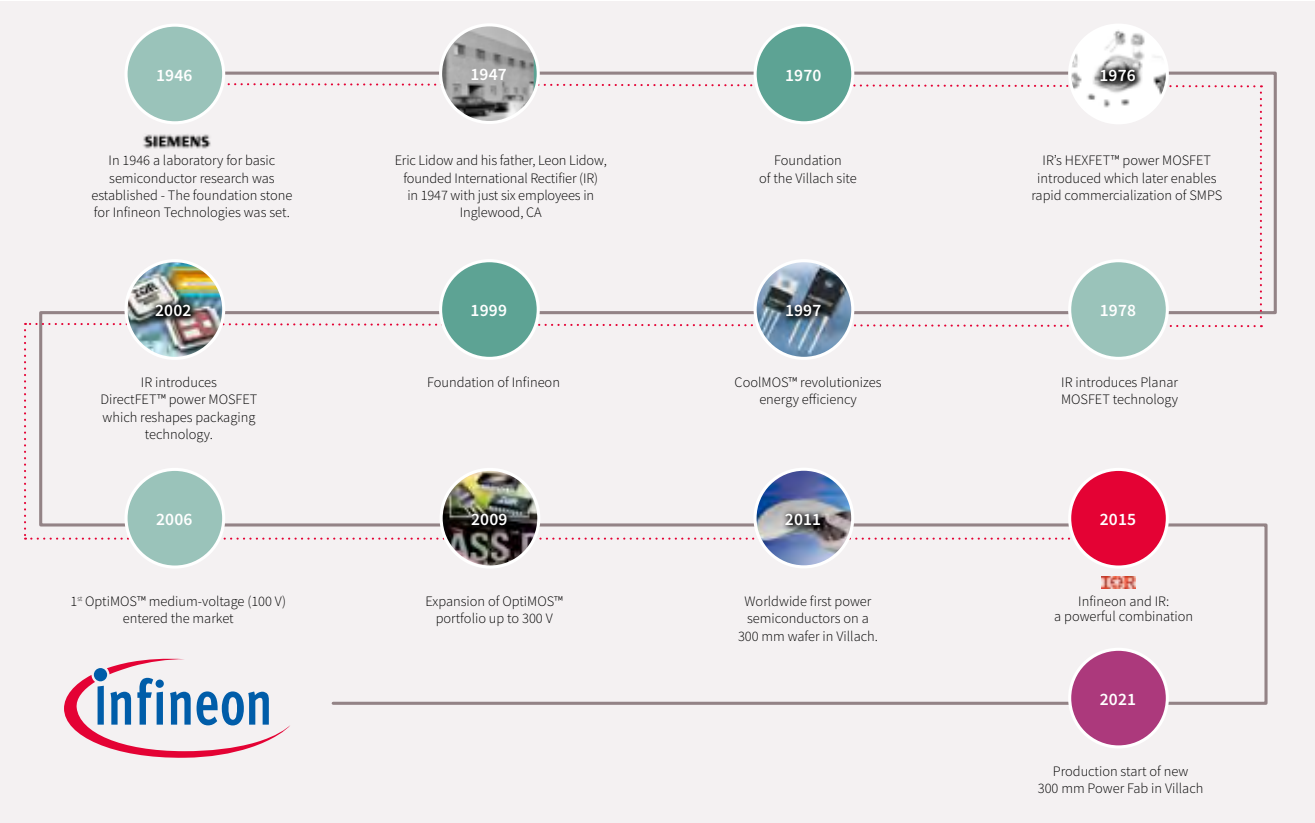

OptiMOS™ and StrongIRFET™

20-300 V N-channel power MOSFETs

Infineon's semiconductors are designed to bring greater efficiency, power density and cost-effectiveness. The full range of OptiMOS™ and StrongIRFET™ power MOSFETs enables innovation and performance in applications such as switch mode power supplies (SMPS), battery powered applications, motor control, drives, inverters, and computing.

Infineon's highly innovative OptiMOS™ and StrongIRFET™ families consistently meet the highest quality and performance demands in key specifications for power system designs such as on-state resistance ($R_{DS(on)}$) and figure of merit (FOM).

OptiMOS™ power MOSFETs provide best-in-class performance. Features include ultra low $R_{DS(on)}$, as well as low charge for high switching frequency applications. StrongIRFET™ power MOSFETs are designed for drives applications and are ideal for designs with a low switching frequency, as well as those that require a high current carrying capability.

Technology development and product family positioning

StrongIRFET™	OptiMOS™
Robust and excellent price/performance ratio › Optimized for switching frequency < 100 kHz › Designed for industrial applications › High current carrying capability › Rugged silicon	**Best-in-class technology** › Optimized for broad switching frequency › Designed for high performance applications › Industry's best figure of merit › High efficiency and power density

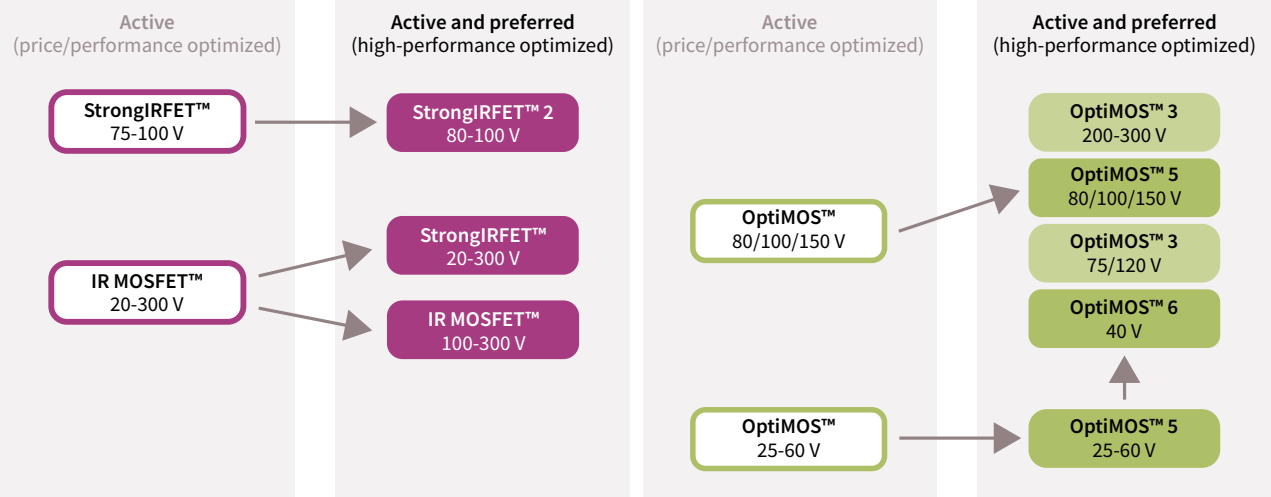

With more than 40 years of experience in power MOSFET innovation, Infineon offers a broad portfolio of products. The product portfolio is divided into “active and preferred”, referring to the latest technology available offering best-in-class performance, and “active”, consisting of well-established technologies which complete this broad portfolio.

StrongIRFET™ 2 power MOSFETs are the latest generation to be added to the family. Currently available in 80 and 100V options with additional voltages to be released later this year, this family offers broad availability and excellent price/performance ratio and are suitable for a broad range of applications.

OptiMOS™ 6 power MOSFETs 40 V are the newest addition to the OptiMOS™ product family. They are the perfect solution when best-in-class (BiC) products and high efficiency over a wide range of output power are required. For other voltage classes, from 25 V up to 150 V, OptiMOS™ 5 represents the latest generation in the market, offering low conduction losses and high switching performance.

For high and low frequency applications OptiMOS™ 3 power MOSFETs is our largest OptiMOS™ family and complements our existing product portfolio as well as providing additional options when best-in-class is not required. StrongIRFET™ is recommended for 20-300 V applications when the high performance is not essential and the cost is a more significant consideration.

Guidance for applications and voltage classes

OptiMOS™ and StrongIRFET™ portfolio, covering 20 up to 300 V MOSFETs, can address a broad range of needs from low to high switching frequencies. The tables below provide a guidance on the recommended OptiMOS™ or StrongIRFET™ products for each major sub-application and voltage class.

Recommended voltage			20 V to 30 V	40 V	60 V	75 V to 80 V	100 V	120 V to 150 V	200 V	250 V	300 V
Battery powered	Low power (Power tools, Multicopter, Battery, Industrial Drives)	OptiMOS™	✓	✓	✓	✓					
		StrongIRFET™	✓	✓	✓	✓					
	High power (LEV, LSEV)	OptiMOS™			✓	✓	✓	✓	✓		
		StrongIRFET™			✓	✓	✓	✓	✓		
Inverters	Solar	OptiMOS™			✓	✓	✓	✓			
		StrongIRFET™			✓	✓	✓				
	Online UPS	slow switching									
		OptiMOS™	✓	✓	✓	✓	✓	✓	✓	✓	✓
		StrongIRFET™	✓	✓	✓	✓	✓	✓	✓	✓	✓
		fast switching									
		OptiMOS™	✓	✓	✓	✓	✓	✓	✓	✓	✓
		StrongIRFET™	✓	✓	✓	✓	✓	✓	✓	✓	✓
	Offline UPS	OptiMOS™		✓	✓						
		StrongIRFET™		✓	✓						
SMPS	Adapter / Charger	OptiMOS™		✓	✓	✓	✓				
		StrongIRFET™		✓	✓	✓	✓				
	PC Power	OptiMOS™		✓	✓						
		StrongIRFET™		✓	✓						
	LCD TV	OptiMOS™			✓	✓	✓				
		StrongIRFET™			✓	✓	✓				
	Server	OptiMOS™		✓	✓	✓					
		StrongIRFET™		✓	✓	✓					
	AC-DC	OptiMOS™				✓	✓	✓	✓		
		StrongIRFET™				✓	✓				
	Telecom	OptiMOS™	✓	✓	✓	✓	✓	✓			
		StrongIRFET™	✓	✓	✓	✓	✓				

StrongIRFET™ recommended	OptiMOS™ recommended
StrongIRFET™ available	OptiMOS™ available

Space-saving and high-performance packages

	TO-247	TO-220	TO-220 FullPAK	D²PAK	D²PAK 7-pin	TO-Leadless	TOLT (Top-side cooling)	TOLG (Gullwing leads)
	Optimized for high power applications and high current capability							
Special features	–						Optimized for top-side cooling	Optimized for TCoB[1] robustness
Height [mm]	5.0	4.4	4.5	4.4	4.4	2.3	2.3	2.3
Outline [mm]	40.15 x 15.9	29.5 x 10.0	29.5 x 10.0	15.0 x 10.0	15.0 x 10.0	11.68 x 9.9	15.0 x 10.0	11.0 x 10.0
Thermal resistance R_{thJC} [K/W]	2.0	0.5	2.5	0.5	0.5	0.4	0.4	0.4

	sTOLL	SuperSO8	SuperSO8 super cool	Power Block	PQFN 3.3 x 3.3 Source-Down	PQFN 3.3 x 3.3	PQFN 2 x 2	DirectFET™
	Optimized for high power in small form factor	For highest efficiency and power management	Optimized for dual side cooling	Significant design shrink	Highest power density per area	High efficiency in small form factor	Enables significant space saving	Best performing dual-side cooling package
Height [mm]	2.3	1.0	1.0	1.0	1.0	1.0	0.9	Small: 0.65 Medium: 0.65 Large: 0.71
Outline [mm]	8.0 x 7.0	5.15 x 6.15	5.0 x 6.0	5.0 x 6.0	3.3 x 3.3	3.3 x 3.3	2.0 x 2.0	Small: 4.8 x 3.8 Medium: 6.3 x 4.9 Large: 9.1 x 6.98
Thermal resistance R_{thJC} [K/W]	0.6	0.8	0.5	1.5	1.4	3.2	11.1	0.5

Discrete packages

Infineon has been making an impact in the MOSFET industry with innovation in MOSFET manufacturing techniques and processes as well as pioneering new packages to meet the changing demands of cutting-edge designs in various applications. OptiMOS™ and StrongIRFET™ technologies are available in different packages to address demands for high current carrying capability and significant space saving. The broad portfolio enables footprint reduction, boosted current rating and optimized thermal performance. While the surface mount leadless devices are enabled for footprint reduction, through-hole packages are characterized by a high-power rating.

Infineon offers innovative packages such as DirectFET™ and TO-Leadless. DirectFET™ is designed for high frequency applications by offering the lowest parasitic resistance. This package is available in three different can sizes: small, medium and large. TO-Leadless is optimized to dissipate power up to 375 W, increasing power density with a substantial reduction in footprint.

New package innovations include the SuperSO8 Source-Down package offering high power density and performance; the TOLG (Gullwing leads) optimized for TCoB (Thermal cycling on board) robustness; TOLT (top-side cooling) optimized for superior thermal performance; sTOLL optimized for high power in small form factor; and the SuperSO8 super cool optimized for dual-side cooling in a standard 5x6 mm² footprint.

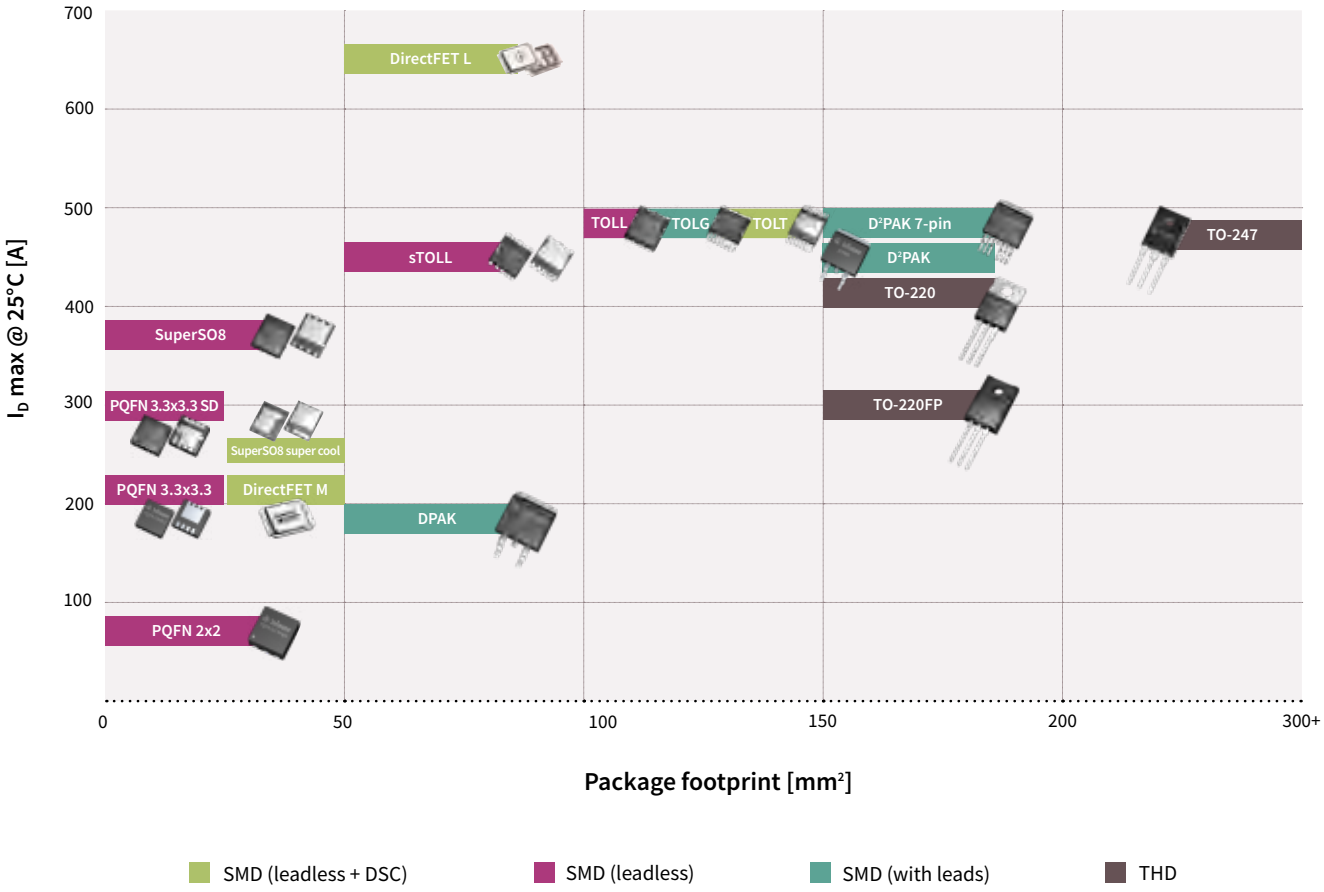

Small signal/small power MOSFETs -250 to 600 V

Combining latest high-performance silicon technology with small and innovative packaging

Small-signal/small power products are ideally suited for space-constrained automotive and non-automotive applications. With an optimal price/performance ratio and small footprint packages, Infineon's small-signal and small-power MOSFETs are the best fit for a wide range of applications and circuits. These include low voltage drives, linear battery charger, battery protection, load switches, DC-DC converters, reverse polarity protection and many more.

The entire family includes different packages:
SOT-223, SOT-23, SOT-323, SOT-363, SOT-89, TSOP-6 and SC59

The product portfolio covers N-channel and P-channel enhancement mode MOSFETs as well as N-channel depletion mode products:

- -250 V to -20 V P-channel enhancement mode (available in single and dual configurations)
- 20 V to 600 V N-channel enhancement mode (available in single and dual configurations)
- -20/+20 V and -30/+30 V complementary (P + N channel) enhancement mode
- 60 V to 600 V N-channel depletion mode

Key features	Key benefits
Products qualified to AEC Q101 and JEDEC Industrial standards	Suitable for automotive and high quality demanding applications
Four $V_{GS(th)}$ classes available for 1.8 V, 2.5 V, 4.5 V, and 10 V gate drives	Easy interface to MCU
ESD protected P-channel parts	Reduction of design complexity
V_{DS} range from -250 V to 600 V	Wide selection of products available
RoHS compliant and halogen free	Industry standard small outline packages
	Environmentally friendly

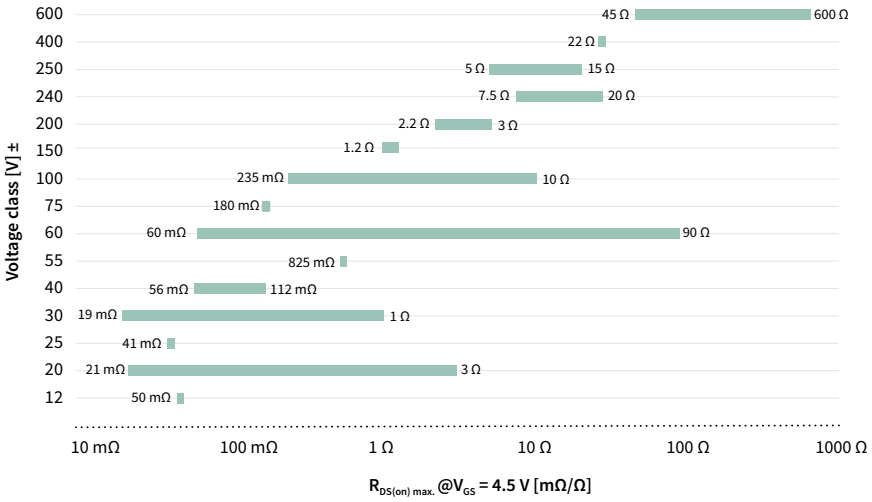

Small signal/small power MOSFETs are available in seven industry-standard package types ranging from the largest SOT-223 to the smallest SOT-363.

Products are offered in single, dual and complementary configurations and are suitable for a wide range of applications, including battery protection, LED lighting, low voltage drives and DC-DC converters.

	SOT-363	SOT-323	SOT-23	TSOP-6	SC59	SOT-89	SOT-223
	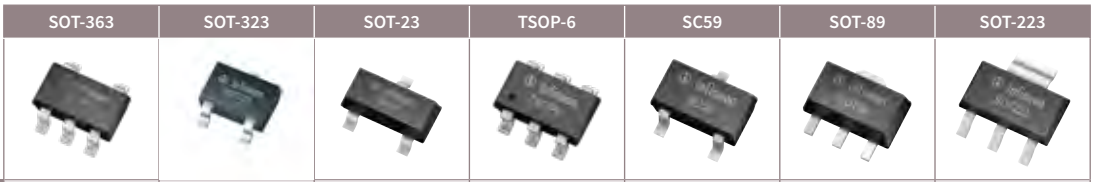						
Package outline [mm²]	4.2	4.2	6.96	7.25	8.4	18	45.5

OptiMOS™ Source-Down power MOSFETs 25-150 V

An innovative PQFN 3.3 mm x 3.3 mm product family

Once again, Infineon is setting a new standard in MOSFET performance with the new Source-Down package to support the requirement for high power density and optimized system-level efficiency. In comparison with a normal Drain-Down device, in the Source-Down technology, the source potential is connected to the thermal pad. Optional Center-Gate footprint is also available. Here the gate-pin is moved to the center supporting easy parallel configuration of multiple MOSFETs. With the larger drain-to-source creepage distance, it is possible to connect the gates of multiple devices on a single PCB layer.

	Standard Drain-Down	New Source-Down	
	PQFN 3.3 x 3.3 standard Drain-Down footprint	PQFN 3.3 x 3.3 Standard-Gate Source-Down footprint	PQFN 3.3 x 3.3 Center-Gate Source-Down footprint
R_{thJC} [C/W]	1.8	1.4	1.4

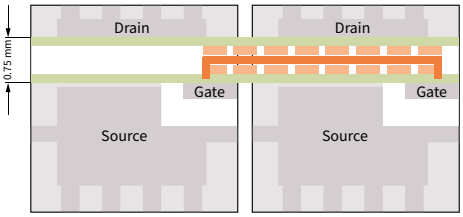

Features and benefits

Key features	Key benefits
› Major reduction in $R_{DS(ON)}$, up to 30% due to larger silicon die in same package outline	› Enabling highest power density and performance
› Improved R_{thJC} overcurrent PQFN package technology	› Superior thermal performance
› High power density	› Form factor reduction
› Standard and Center-Gate footprint options	› Optimized layout posibilities › Simplifying parallel configuration of multiple MOSFETs with Center-Gate footprints

Optimized thermal management

Drain-Down

PQFN 3.3 x 3.3

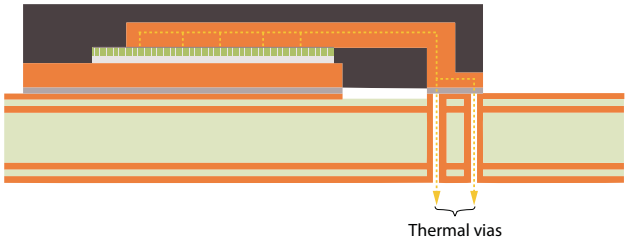

Source-Down

PQFN 3.3 x 3.3

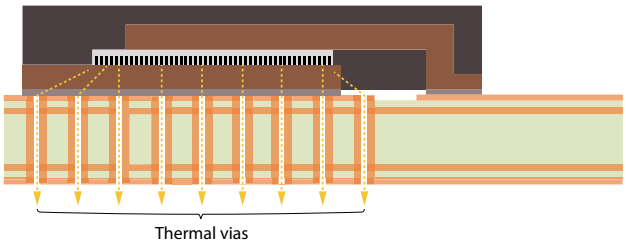

In the Source-Down package technology, the heat is dissipated directly into the PCB through a thermal pad instead of over the bond wire or the copper clip.
The package significantly improves the thermal resistance (R_{thJC}) of this product family. In most cases, thermal vias cannot be used on the thermal pad if it is connected to the noisy switch node potential, with Source-Down, the thermal pad of the low-side MOSFET is now on the ground potential enabling the use of thermal vias right underneath the device. This considerably improves the thermal performance and the power density in the end application.

StrongIRFET™ 2 MOSFETs – 80 V/100 V

Right-fit products for a broad range of applications

The new StrongIRFET™ 2 power MOSFETs in the TO-220 package are the latest generation of MOSFET technology addressing a wide range of applications such as adapter, TV, motor drives, e-scooter, battery management, light electric vehicles, robotics, power and gardening tools. Featuring broad availability and excellent price/performance ratio, this new technology offers right-fit products with an easy choice for designers interested in convenient selection and purchasing. Optimized for both low and high switching frequencies, the family supports a broad range of applications enabling flexibility in design.

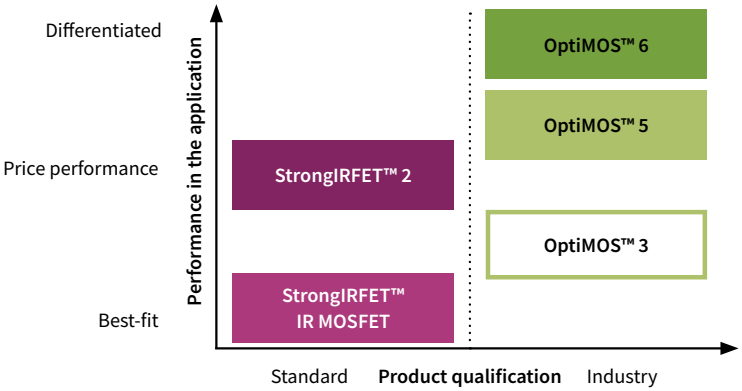

Features and benefits

Key features	Key benefits
› Broad availability from distribution partners	› Increased security of supply
› Excellent price/performance ratio	› Right-fit products
› Ideal for high and low switching frequency	› Supports wide variety of applications
› Industry standard footprint	› Standard pin out allows for drop-in replacement
› High current rating	› Increased product ruggedness

StrongIRFET™ 2 vs. previous generation 100 V performance comparison

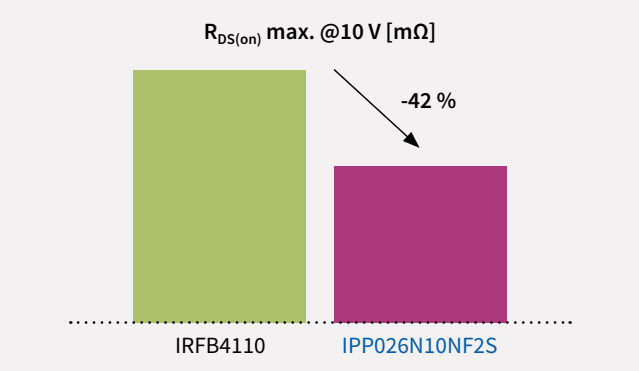

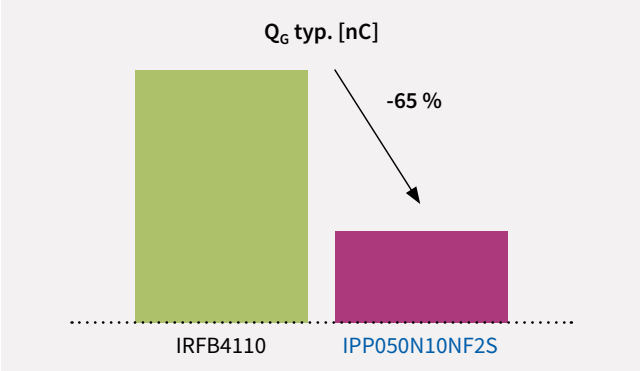

Compared to the previous StrongIRFET™ generation in 100 V TO-220 package, StrongIRFET™ 2 shows significant improvements such as ~40 % lower $R_{DS(on)}$ and ~65% reduced Q_G. This results in better efficiency and longer life time.

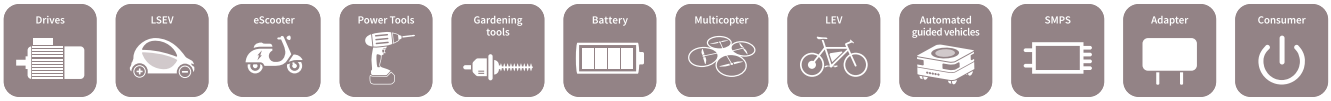

For more details on the product, click on the part number or contact our product support.

TOLx family

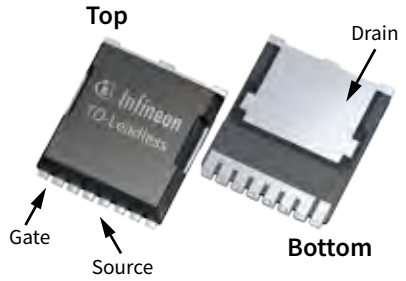

Optimized for high power applications

TO-Leadless (TOLL)

TO-Leadless is optimized to handle currents up to 500 A, increasing power density with a substantial reduction in footprint. A footprint reduction of 30% compared to D²PAK, together with a height reduction of 50%, results in an overall space saving of 60% enabling much more compact designs.

Key features	Key benefits
› Best-in-class technology	› High performance capability
› High current rating > 500 A	› High system reliability
› 60% space reduction compared to D²PAK 7-pin	› Optimized board utilization

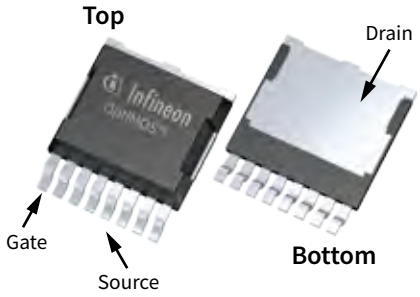

Optimized for better TCoB robustness

TOLG (Gullwing leads)

TOLG package offers a compatible footprint to the TO-Leadless with the additional feature of Gullwing leads resulting in two times higher TCoB performances compared to TO-Leadless. This package is excellent on aluminum insulated metal substrate boards (Al-IMS).

Key features	Key benefits
› Best-in-class technology	› High performance capability
› High current rating > 450 A	› High system reliability
› Low ringing and voltage overshoot	› High efficiency and lower EMI
› 60% space reduction compared to D²PAK 7-pin	› Optimized board utilization
› Gullwing leads	› High thermal cycling on board performance

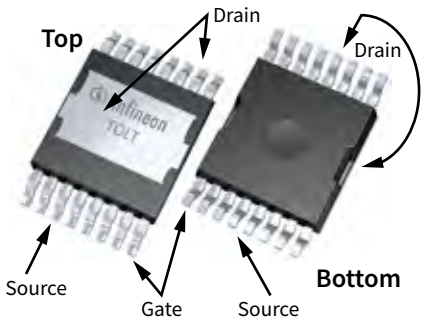

Optimized for superior thermal performance

TOLT (Top-side cooling)

TOLT is the new top-side cooling package within the TOLx family. With top-side cooling, the drain is exposed at the surface of the package allowing for 95 percent of the heat to be dissipated directly to the heatsink, achieving 20 percent better R_{thJA} and 50 percent improved R_{thJC} compared to the TOLL package. With bottom-side cooling packages, like the TOLL or the D²PAK, the heat is dissipated via the PCB to the heatsink resulting in high power losses.

Key features	Key benefits
› Low $R_{DS(on)}$	› Reduction in conduction losses
› High current rating	› Increased product ruggedness
› Top-side cooling	› Superior thermal performance
› Negative standoff	› Minimize thermal resistance to heatsink

TOLx family – Cooling concept

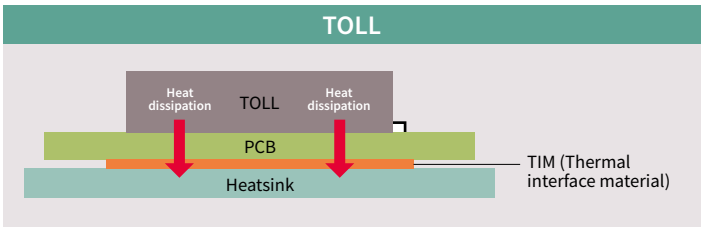

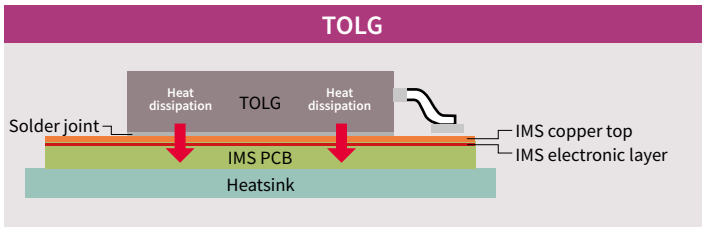

With TOLL / TOLG, board mounting, the heat is dissipated through the PCB to the heatsink.
Due to the PCB thermal resistance, power losses occur.

MOSFET (including chip, die attached and drain tab) → **Solder** → **PCB** → **TIM / Thermal grease** → **Heatsink**

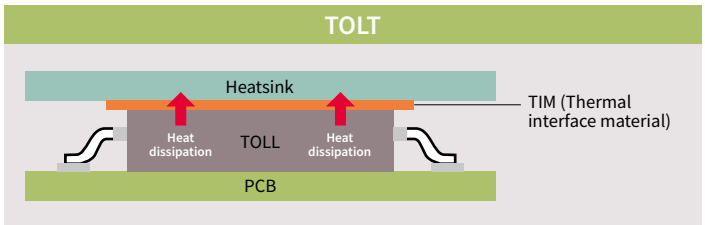

With top-side cooling setup, the drain pad is exposed on the top of the package allowing the majority of the heat to be dissipated into the top-mounted heatsink. This pulls heat away from the PCB resulting in at least 20 percent better R_{thJA} compared to standard over-molded TOLL.

MOSFET (including chip, die attached and drain tab) → **TIM / Thermal grease** → **Heatsink**

Thermal cycling on board (TCoB) performance

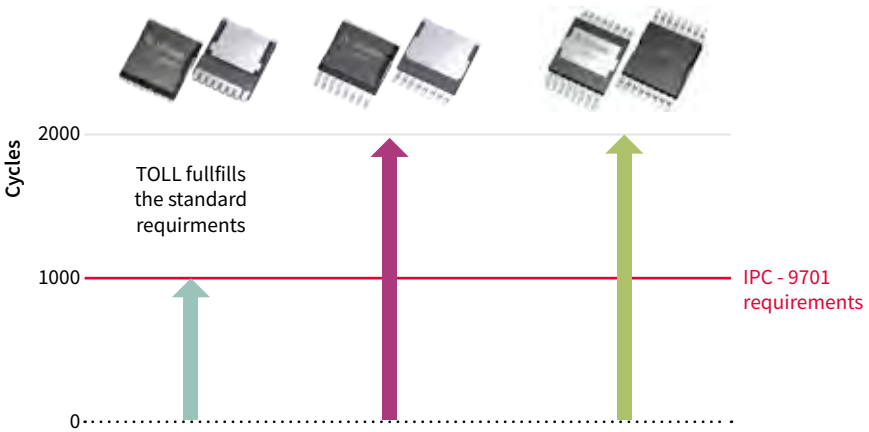

OptiMOS™ and StrongIRFET™ 20 V (super) logic level

$R_{DS(on)}$ max @ V_{GS}=4.5 V [mΩ]	TO-252 (DPAK)	PQFN 2 x 2	PQFN 3.3 x 3.3	SuperSO8
< 1				IRFH6200TRPBF [1)] $R_{DS(on)}$=0.99 mΩ
2-4			IRLHM620TRPBF** [1)] $R_{DS(on)}$=2.5 mΩ	
	IRLR6225TRPBF [1)] $R_{DS(on)}$=4.0 mΩ			
4-10				IRLH6224TRPBF [1)] $R_{DS(on)}$=3.0 mΩ
> 10		IRLHS6242TRPBF $R_{DS(on)}$=11.7 mΩ		

OptiMOS™ and StrongIRFET™ 25 V logic level

$R_{DS(on)}$ max @ V_{GS}=10 V [mΩ]	DirectFET™	PQFN 2 x 2	PQFN 3.3 x 3.3	SuperSO8	Source-Down PQFN 3.3 x 3.3
< 1				BSC004NE2LS5 $R_{DS(on)}$=0.9 mΩ	IQE006NE2LM5 $R_{DS(on)}$=0.6 mΩ
				BSC009NE2LS5 $R_{DS(on)}$=0.9 mΩ	IQE006NE2LM5CG $R_{DS(on)}$=0.6 mΩ
	IRF6717MTRPBF $R_{DS(on)}$=0.95 mΩ			BSC009NE2LS $R_{DS(on)}$ = 0.9 mΩ	
			BSZ009NE2LS5 $R_{DS(on)}$=0.9 mΩ	BSC009NE2LS5I* $R_{DS(on)}$=0.95 mΩ	
1-2			BSZ010NE2LS5 $R_{DS(on)}$=1.0 mΩ	BSC010NE2LS $R_{DS(on)}$=1.0 mΩ	
			BSZ011NE2LS5I $R_{DS(on)}$=1.1 mΩ	BSC010NE2LSI* $R_{DS(on)}$=1.05 mΩ	
				BSC014NE2LSI* $R_{DS(on)}$=1.4 mΩ	
			BSZ013NE2LS5I* $R_{DS(on)}$=1.3 mΩ	IRFH5250D $R_{DS(on)}$=1.4 mΩ	
			BSZ014NE2LS5IF** $R_{DS(on)}$=1.45 mΩ	BSC015NE2LS5I* $R_{DS(on)}$=1.5 mΩ	
			BSZ017NE2LS5I* $R_{DS(on)}$=1.7 mΩ	BSC018NE2LS $R_{DS(on)}$=1.8 mΩ	
	IRF6797MTRPBF* $R_{DS(on)}$=1.1 mΩ		BSZ018NE2LS $R_{DS(on)}$=1.8 mΩ	BSC018NE2LSI* $R_{DS(on)}$=1.8 mΩ	
	IRF6715MTRPBF $R_{DS(on)}$=1.3 mΩ		BSZ018NE2LSI* $R_{DS(on)}$=1.8 mΩ		
	IRF6795MTRPBF* $R_{DS(on)}$=1.4 mΩ				
	IRF6714MTRPBF $R_{DS(on)}$=1.6 mΩ				
2-4		ISK024NE2LM5 $R_{DS(on)}$=2.4 mΩ	BSZ031NE2LS5 $R_{DS(on)}$=3.1 mΩ	BSC024NE2LS $R_{DS(on)}$=2.4 mΩ	
			BSZ033NE2LS5 $R_{DS(on)}$=3.3 mΩ	BSC026NE2LS5 $R_{DS(on)}$=2.6 mΩ	
			BSZ036NE2LS $R_{DS(on)}$=3.6 mΩ	BSC032NE2LS $R_{DS(on)}$=3.2 mΩ	
	IRF6712STRPBF $R_{DS(on)}$=3.8 mΩ				
4-10			BSZ060NE2LS $R_{DS(on)}$=6.0 mΩ	BSC050NE2LS $R_{DS(on)}$=5.0 mΩ	
> 10		IRFHS8242 $R_{DS(on)}$=13 mΩ			

* Optimized for resonant applications (e.g. LLC converter)
** Monolithically integrated Schottky-like diode
*** $R_{DS(on)}$ max @ V_{GS}=4.5 V

1) 2.5 V_{GS} capable

For more details on the product, click on the part number or contact our product support.

OptiMOS™ and StrongIRFET™ 25/30 V in Power Block 5x6

Part number	Package	Monolithically-integrated Schottky-like diode	BV_{DSS} [V]	$R_{DS(on), max.}$ [mΩ] @ V_{GS}=4.5 V max.		Q_g [nC] @ V_{GS}=4.5 V typ.	
				High-side	Low-side	High-side	Low-side
BSG0810NDI	SuperSO8	✓	25	4.0	1.2	5.6	16.0
BSG0811ND	SuperSO8	–	25	4.0	1.1	5.6	20.0
BSG0813NDI	SuperSO8	✓	25	4.0	1.7	5.6	12.0

OptiMOS™ 25/30 V symmetrical and asymmetrical dual N-Channel MOSFETs in 5x6 and 3x3 PQFN

Integrates the low-side and high-side MOSFET of a synchronous DC-DC converter into a single package.
The small outline and the interconnection of the two MOSFETs within the package minimize the loop inductance which boosts efficiency.

Part number	Package	Monolithically-integrated Schottky-like diode	BV_{DSS} [V]	$R_{DS(on), max.}$ [mΩ] @ V_{GS}=4.5 V max.		Q_g [nC] @ V_{GS}=4.5 V typ.	
				High-side	Low-side	High-side	Low-side
BSC0910NDI*	asymmetrical dual 5 x 6	✓	25	5.9	1.6	7.7	25
BSC0911ND*	asymmetrical dual 5 x 6	–	25	4.8	1.7	7.7	25
BSC0921NDI*	asymmetrical dual 5 x 6	✓	30	7	2.1	5.8	21
BSC0923NDI*	asymmetrical dual 5 x 6	✓	30	7	3.7	5.2	12.2
BSC0924NDI*	asymmetrical dual 5 x 6	✓	30	7	5.2	5.2	8.6
BSZ0910ND*	symmetrical dual 3 x 3	–	30	13	13	4	4
BSZ0909ND*	symmetrical dual 3 x 3	–	30	25	25	1.8	1.8
BSC0925ND*	symmetrical dual 5 x 6	–	30	6.4	6.4	5.2	6.7
BSC0993ND*	symmetrical dual 5 x 6	–	30	7	7	5.4	6.7

OptiMOS™ / StrongIRFET ™ 30 V - 100 V dual N-Channel MOSFETs

Integrates two independent N-channel MOSFETs into a single package for high power density and compact design.
Ideal for DC motors with power rating < 200 W

Part number	Package	Monolithically integrated Schottky like diode	BV_{DSS} [V]	$R_{DS(on), max.}$ [mΩ] @ V_{GS}=10 V max.		Q_g [nC] @ V_{GS}=10 V typ.	
				High-side	Low-side	High-side	Low-side
IRL6297SDTRPBF*	symmetrical dual DirectFET™	–	20	3.8**	3.8**	54	54
IRLHS6276*	symmetrical dual PQFN 2 x 2	–	20	45**	45**	3.1**	3.1**
IRF7907*	asymmetrical dual SO-8	–	30	16.4	11.8	6.7**	14**
IRF7905TRPBF*	asymmetrical dual SO-8	–	30	21.8	17.1	4.6**	6.9**
IRLHS6376TRPBF*	symmetrical dual PQFN 2 x 2	–	30	63**	63**	2.8**	2.8**
IRF40H233	symmetrical dual 5 x 6	–	40	6.2	6.2	45	45
BSC072N04LD*	symmetrical dual 5 x 6	–	40	7.2	7.2	39	39
BSC076N04ND	symmetrical dual 5 x 6	–	40	7.6	7.6	28	28
BSC112N06LD*	symmetrical dual 5 x 6	–	60	11.2	11.2	41	41
BSC155N06ND	symmetrical dual 5 x 6	–	60	15.5	15.5	21	21
IRF7351	symmetrical dual SO-8	–	60	17.8	17.8	24	24
BSO615NG	symmetrical dual SO-8	–	60	150	150	14	14
IRFHM792	symmetrical dual PQFN 3 x 3	–	100	195	195	4.2	4.2

Dual N-channel audio MOSFETs

Digital audio MOSFET half-bridges are specifically designed for class D audio amplifier applications. They consist of two power MOSFET switches connected in half-bridge configuration.

Part number	Package	Monolithically integrated Schottky like diode	BV_{DSS} [V]	$R_{DS(on), max.}$ [mΩ] @ V_{GS}=4.5 V max.		Q_g [nC] @ V_{GS}=4.5 V typ.	
				High-side	Low-side	High-side	Low-side
IRFI4212H-117P	half-bridge in TO220FP	–	100	72.5	72.5	12	12
IRFI4019H-117P	half-bridge in TO220FP	–	150	95	95	13	13
IRFI4020H-117P	half-bridge in TO220FP	–	200	100	100	19	19

* Logic level (capable of 4.5 V gate drive)
** $R_{DS(on)}$ at V_{GS}=4.5V

For more details on the product, click on the part number or contact our product support.

OptiMOS™ and StrongIRFET™ 30 V logic level

$R_{DS(on), max.}$ @ V_{GS}=10 V [mΩ]	TO-252 (DPAK)	TO-263 (D^2PAK)	TO-220
1-2		IRLS3813TRLPBF $R_{DS(on)}$=1.95 mΩ	IRLB3813PBF $R_{DS(on)}$=1.95 mΩ
2-4	IRFR8314TRPBF $R_{DS(on)}$=2.2 mΩ		IRLB8314PBF $R_{DS(on)}$=2.4 mΩ
	IRLR8743TRPBF $R_{DS(on)}$=3.1 mΩ		
			IRLB8743PBF $R_{DS(on)}$=3.2 mΩ
4-10	IRLR8726TRPBF $R_{DS(on)}$=5.8 mΩ		IRLB8748PBF $R_{DS(on)}$=4.8 mΩ
	IRLR8729TRPBF $R_{DS(on)}$=8.9 mΩ		IRLB8721PBF $R_{DS(on)}$=8.7 mΩ

OptiMOS™ and StrongIRFET™ 30 V logic level

$R_{DS(on), max.}$ @ V_{GS}=10 V [mΩ]	DirectFET™	PQFN 3.3 x 3.3	SuperSO8	TO-Leadless
< 1			BSC005N03LS5 $R_{DS(on)}$=0.5 mΩ	IPT004N03L $R_{DS(on)}$=0.4 mΩ
			BSC005N03LS5I* $R_{DS(on)}$=0.5 mΩ	
1-2			ISC011N03L5S $R_{DS(on)}$=1.1 mΩ	
			IRFH8303TRPBF $R_{DS(on)}$=1.1 mΩ	
			BSC011N03LS $R_{DS(on)}$=1.1 mΩ	
			BSC011N03LSI* $R_{DS(on)}$=1.1 mΩ	
			BSC011N03LST** $R_{DS(on)}$=1.1 mΩ	
	IRF8301MTRPBF $R_{DS(on)}$=1.3 mΩ		IRFH8307TRPBF $R_{DS(on)}$=1.3 mΩ	
	IRF6726MTRPBF $R_{DS(on)}$=1.3 mΩ	BSZ0500NSI* $R_{DS(on)}$=1.5 mΩ	BSC0500NSI* $R_{DS(on)}$=1.3 mΩ	
	IRF6727MTRPBF $R_{DS(on)}$=1.22 mΩ	BSZ019N03LS $R_{DS(on)}$=1.9 mΩ		
	IRF8302MTRPBF* $R_{DS(on)}$=1.4 mΩ	ISZ019N03L5S $R_{DS(on)}$=1.9 mΩ	IRFH5301TRPBF $R_{DS(on)}$=1.85 mΩ	
		BSZ0901NS $R_{DS(on)}$=2.0 mΩ	ISC019N03L5S $R_{DS(on)}$=1.9 mΩ	
		BSZ0501NSI* $R_{DS(on)}$=2.0 mΩ	BSC0901NS $R_{DS(on)}$=1.9 mΩ	
			BSC0501NSI** $R_{DS(on)}$=1.9 mΩ	
			BSC0901NSI** $R_{DS(on)}$=2.0 mΩ	
2-4			ISC026N03L5S $R_{DS(on)}$=2.6 mΩ	
			ISC037N03L5IS $R_{DS(on)}$=3.7 mΩ	
		ISZ040N03L5IS $R_{DS(on)}$=4.0 mΩ	ISC045N03L5S $R_{DS(on)}$=4.5 mΩ	
4-10		ISZ065N03L5S $R_{DS(on)}$=6.5 mΩ		

*Monolithically-integrated Schottky-like diode
**For more information on the product, contact our product support

For more details on the product, click on the part number or contact our product support.

OptiMOS™ and StrongIRFET™ 30 V logic level

$R_{DS(on), max.}$ @V_{GS}=10 V [mΩ]	DirectFET™	PQFN 3.3 x 3.3	SuperSO8	SO-8	PQFN 2 x 2
2-4	IRF8304MTRPBF $R_{DS(on)}$=1.7 mΩ	BSZ0901NSI** $R_{DS(on)}$=2.1 mΩ	IRFH8311TRPBF $R_{DS(on)}$=2.1 mΩ		ISK036N03LM5 [2] $R_{DS(on)}$=3.6 mΩ
			IRFH5302TRPBF $R_{DS(on)}$=2.1 mΩ		
	IRF6724MTRPBF $R_{DS(on)}$=1.9 mΩ	IRLHM620TRPBF $R_{DS(on)}$=2.5 mΩ	BSC0502NSI* $R_{DS(on)}$=2.4 mΩ		
		BSZ0902NS $R_{DS(on)}$=2.6 mΩ			
			IRFH5302DTRPBF* $R_{DS(on)}$=2.5 mΩ		
			BSC0902NS $R_{DS(on)}$=2.6 mΩ		
			IRF8252TRPBF $R_{DS(on)}$=2.7 mΩ		
		BSZ0902NSI* $R_{DS(on)}$=2.8 mΩ	BSC0902NSI* $R_{DS(on)}$=2.8 mΩ	IRF8788TRPBF $R_{DS(on)}$=2.8 mΩ	
		BSZ0502NSI* $R_{DS(on)}$=2.8 mΩ	IRFH8316TRPBF $R_{DS(on)}$=2.95 mΩ		
		BSZ0503NSI* $R_{DS(on)}$=3.4 mΩ	IRFH8318TRPBF $R_{DS(on)}$=3.1 mΩ		
		IRLHM630** $R_{DS(on)}$= 3.5 mΩ	BSC0503NSI* $R_{DS(on)}$=3.2 mΩ	IRF7862TRPBF $R_{DS(on)}$=3.3 mΩ	
		BSZ035N03LS G $R_{DS(on)}$=3.5 mΩ			
		IRFHM830 $R_{DS(on)}$= 3.8 mΩ	BSC0504NSI* $R_{DS(on)}$=3.7 mΩ		
		BSZ0904NSI** $R_{DS(on)}$=4.0 mΩ	BSC0904NSI* $R_{DS(on)}$=3.7 mΩ		
4-10	IRF6722MTRPBF $R_{DS(on)}$= 7.7 mΩ		IRFH8324TRPBF $R_{DS(on)}$=4.1 mΩ		
		BSZ0506NS $R_{DS(on)}$=4.4 mΩ			
			BSC0906NS $R_{DS(on)}$=4.5 mΩ		
			IRFH5304TRPBF $R_{DS(on)}$=4.5 mΩ		
		BSZ050N03LS G $R_{DS(on)}$=5.0 mΩ	IRFH8325TRPBF $R_{DS(on)}$=5.0 mΩ	IRF8736TRPBF $R_{DS(on)}$=4.8 mΩ	
		BSZ058N03LS G $R_{DS(on)}$=5.8 mΩ			
			BSC052N03LS $R_{DS(on)}$=5.2 mΩ		
		BSZ065N03LS $R_{DS(on)}$=6.5 mΩ			
			IRFH8330TRPBF $R_{DS(on)}$=6.6 mΩ		
		BSZ0994NS $R_{DS(on)}$= 7.0 mΩ			
			IRFH8334TRPBF $R_{DS(on)}$=9.0 mΩ		
10-63					IRLHS6342*** $R_{DS(on)}$= 16 mΩ
				IRL6342 [1]** $R_{DS(on)}$ = 14.6 mΩ	IRFHS8342 $R_{DS(on)}$= 16 mΩ

** Monolithically-integrated Schottky-like diode
*** $R_{DS(on)}$, max. @V_{GS}=4.5 V
****For more information on the product, contact our product support

1) 2.5 V_{GS} capable
2) Coming soon

For more details on the product, click on the part number or contact our product support.

OptiMOS™ and StrongIRFET™ 40 V normal level

$R_{DS(on)}$, max. @V_{GS}=10 V [mΩ]	TO-252 (DPAK)	TO-263 (D^2PAK)	TO-263 (D^2PAK 7-pin)	TO-220	TO-247	DirectFET™	sTOLL	SuperSO8	TO-220 FullPAK
<1			IRF40SC240 $R_{DS(on)}$=0.65 mΩ				IST006N04NM6 $R_{DS(on)}$=0.6 mΩ	ISC007N04NM6 $R_{DS(on)}$=0.7 mΩ	
			IRFS7430TRL7PP $R_{DS(on)}$ =0.75 mΩ				IST007N04NM6 $R_{DS(on)}$=0.7 mΩ	ISC010N04NM6 $R_{DS(on)}$=1.0 mΩ	
1-2		IRFS7430TRLPBF $R_{DS(on)}$ =1.3 mΩ	IRFS7434TRL7PP $R_{DS(on)}$ =1.0 mΩ	IRFB7430PBF $R_{DS(on)}$ =1.3 mΩ	IRFP7430PBF $R_{DS(on)}$ =1.3 mΩ			ISC012N04NM5 $R_{DS(on)}$=1.2 mΩ	
						IRF7739L1TRPBF $R_{DS(on)}$ =1.0 mΩ		IRFH7084TRPBF $R_{DS(on)}$ =1.25 mΩ	
		IRFS3004TRLPBF $R_{DS(on)}$ =1.75 mΩ	IRFS3004-7P $R_{DS(on)}$ =1.25 mΩ	IRFB7434PBF $R_{DS(on)}$ =1.6 mΩ		IRF7480MTRPBF $R_{DS(on)}$ =1.2 mΩ		IRFH7004TRPBF $R_{DS(on)}$ =1.4 mΩ	
		IRFS7434TRLPBF $R_{DS(on)}$ =1.6 mΩ	IRFS7437TRL7PP $R_{DS(on)}$ =1.4 mΩ	IRFB3004PBF $R_{DS(on)}$ =1.75 mΩ		IRF7946TRPBF $R_{DS(on)}$ =1.4 mΩ		ISC015N04NM5 $R_{DS(on)}$=1.5 mΩ	
		IRFS7437TRLPBF $R_{DS(on)}$ =1.8 mΩ		IRFB7437PBF $R_{DS(on)}$ =2.0 mΩ				ISC017N04NM5 $R_{DS(on)}$=1.7 mΩ	
						IRF40DM229 $R_{DS(on)}$=1.85 mΩ		IRF40H210 $R_{DS(on)}$ =1.7 mΩ	
								ISC019N04NM5 $R_{DS(on)}$=1.9 mΩ	
2-4	IRFR7440TRPBF $R_{DS(on)}$ =2.4 mΩ	IRFS7440TRLPBF $R_{DS(on)}$ =2.5 mΩ		IPP023N04N G $R_{DS(on)}$ =2.3 mΩ		IRF7483MTRPBF $R_{DS(on)}$ =2.3 mΩ		IRFH7440TRPBF $R_{DS(on)}$ =2.4 mΩ	IPA028N04NM3S $R_{DS(on)}$ =2.8 mΩ
	IRFR7446TRPBF $R_{DS(on)}$ =3.9 mΩ	IRF1404S $R_{DS(on)}$ =4.0 mΩ		IRFB7440PBF $R_{DS(on)}$ =2.5 mΩ				IRFH5004TRPBF $R_{DS(on)}$=2.6 mΩ	
				IRFB7446PBF $R_{DS(on)}$ =3.3 mΩ				ISC028N04NM5 $R_{DS(on)}$=2.8 mΩ	
								IRFH7446TRPBF $R_{DS(on)}$ =3.3 mΩ	
								ISC036N04NM5 $R_{DS(on)}$=3.6 mΩ	
4-10								ISC046N04NM5 $R_{DS(on)}$=4.6 mΩ	
	IRF40R207 $R_{DS(on)}$ =5.1 mΩ			IRF40B207 $R_{DS(on)}$ =4.5 mΩ				ISC058N04NM5 $R_{DS(on)}$=5.8 mΩ	

For more details on the product, click on the part number or contact our product support.

OptiMOS™ and StrongIRFET™ 40 V logic level

$R_{DS(on), max.}$ @V_{GS}=10 V [mΩ]	TO-252 (DPAK)	TO-263 (D^2PAK)	TO-263 (D^2PAK 7-pin)	TO-220	TO-247	DirectFET™	PQFN 3.3 x 3.3	SuperSO8	TO-Leadless
<1			IRL40SC228 $R_{DS(on)}$ =0.65 mΩ			IRL7472L1TRPBF $R_{DS(on)}$ =0.45 mΩ		BSC007N04LS6 $R_{DS(on)}$=0.7 mΩ	IRL40T209 $R_{DS(on)}$= 0.8 mΩ
			IRL40SC209 $R_{DS(on)}$ =0.8 mΩ			IRL40DM247 $R_{DS(on)}$ =1.0 mΩ			
1-2				IRL40B209 $R_{DS(on)}$ =1.25 mΩ	IRLP3034PBF $R_{DS(on)}$ =1.7 mΩ			BSC010N04LS $R_{DS(on)}$ =1.0 mΩ	
		IRLS3034TRLPBF $R_{DS(on)}$ =1.7 mΩ	IRLS3034TRL7P $R_{DS(on)}$ =1.4 mΩ	IRLB3034PBF $R_{DS(on)}$ =1.7 mΩ		IRL7486MTRPBF $R_{DS(on)}$ =1.4 mΩ		BSC010N04LS6 $R_{DS(on)}$ =1.0 mΩ	
		IRL40S212 $R_{DS(on)}$ =1.9 mΩ		IRL40B212 $R_{DS(on)}$ =1.9 mΩ				BSC010N04LST $R_{DS(on)}$=1.0 mΩ	
								BSC010N04LSI $R_{DS(on)}$ =1.05 mΩ	
								BSC010N04LSC* $R_{DS(on)}$= 1.05 mΩ	
								BSC014N04LST $R_{DS(on)}$ =1.4 mΩ	
								BSC014N04LS $R_{DS(on)}$ =1.4 mΩ	
								BSC014N04LSI $R_{DS(on)}$ =1.45 mΩ	
							BSZ018N04LS6 $R_{DS(on)}$=1.8 mΩ		
								BSC019N04LS $R_{DS(on)}$ =1.9 mΩ	
								BSC019N04LST $R_{DS(on)}$ =1.9 mΩ	
2-4				IRL40B215 $R_{DS(on)}$ =2.7 mΩ		IRF6613TRPBF $R_{DS(on)}$=3.4 mΩ	BSZ021N04LS6 $R_{DS(on)}$ =2.1 mΩ	BSC022N04LS $R_{DS(on)}$ =2.2 mΩ	
							BSZ024N04LS6 $R_{DS(on)}$ =2.4 mΩ	BSC022N04LS6 $R_{DS(on)}$ =2.2 mΩ	
								IRLH5034TRPBF $R_{DS(on)}$=2.4 mΩ	
							BSZ025N04LS $R_{DS(on)}$ =2.5 mΩ	BSC026N04LS $R_{DS(on)}$ =2.6 mΩ	
							BSZ028N04LS $R_{DS(on)}$ =2.8 mΩ	BSC027N04LS G $R_{DS(on)}$ =2.7 mΩ	
							BSZ034N04LS $R_{DS(on)}$ =3.4 mΩ	BSC032N04LS $R_{DS(on)}$ =3.2 mΩ	
	IPD036N04L G $R_{DS(on)}$=3.6 mΩ						BSZ040N04LS G $R_{DS(on)}$ =4.0 mΩ		
4-10	IRLR3114ZTRPBF $R_{DS(on)}$ =4.5 mΩ					IRF6616TRPBF $R_{DS(on)}$ =5.0 mΩ			
						IRF6614TRPBF $R_{DS(on)}$=8.3 mΩ	BSZ063N04LS6 $R_{DS(on)}$ =6.3 mΩ		
								BSC059N04LS6 $R_{DS(on)}$ =5.9 mΩ	

* Increased creepage distance

For more details on the product, click on the part number or contact our product support.

OptiMOS™ and StrongIRFET™ 60 V normal level

$R_{DS(on)}$, max. @V_{GS}=10 V [mΩ]	TO-252 (DPAK)	TO-263 (D^2PAK)	TO-263 (D^2PAK 7-pin)	TO-262 (I^2PAK)	TO-220	TO-220 FullPAK	TO-247	SuperSO8 super cool
1-2			IPB010N06N [2] $R_{DS(on)}$ =1.0 mΩ					BSC014N06NSSC $R_{DS(on)}$ = 1.4 mΩ
			IRF60C241 $R_{DS(on)}$=1.3 mΩ					BSC016N06NSSC $R_{DS(on)}$ = 1.6 mΩ
			IRFS7530TRL7PP $R_{DS(on)}$ =1.4 mΩ					
			IPB014N06N [2] $R_{DS(on)}$ =1.4 mΩ		IRFB7530PBF $R_{DS(on)}$ =2.0 mΩ			
		IRFS7530TRLPBF $R_{DS(on)}$ =2.0 mΩ	IRFS7534TRL7PP [2] $R_{DS(on)}$ =1.95 mΩ		IPP020N06N [2] $R_{DS(on)}$ =2.0 mΩ		IRFP7530PBF $R_{DS(on)}$ =2.0 mΩ	
2-4	IPD025N06N [2] $R_{DS(on)}$ =2.5 mΩ	IRFS7534TRLPBF $R_{DS(on)}$ =2.4 mΩ	IRFS3006TRL7PP $R_{DS(on)}$ =2.1 mΩ					BSC028N06NSSC $R_{DS(on)}$ = 2.8 mΩ
		IRFS3006 $R_{DS(on)}$ =2.5 mΩ			IRFB7534PBF $R_{DS(on)}$ =2.4 mΩ			
		IPB026N06N [2] $R_{DS(on)}$ =2.6 mΩ			IRFB3006PBF $R_{DS(on)}$ =2.5 mΩ		IRFP3006PBF $R_{DS(on)}$ =2.5 mΩ	
				IPI029N06N [2] $R_{DS(on)}$ =2.9 mΩ	IPP029N06N [2] $R_{DS(on)}$ =2.9 mΩ	IPA029N06N [2] $R_{DS(on)}$ =2.9 mΩ	IRFP3206PBF $R_{DS(on)}$ =3.0 mΩ	
					IRFB3206BF $R_{DS(on)}$ =3.0 mΩ	IPA029N06NM5S $R_{DS(on)}$ =2.9 mΩ		
	IPD033N06N [2] $R_{DS(on)}$=3.3 mΩ	IRFS3206 $R_{DS(on)}$=3.0 mΩ						
		IRFS7537TRLPBF $R_{DS(on)}$ =3.3 mΩ			IRFB7537PBF $R_{DS(on)}$ =3.3 mΩ		IRFP7537PBF $R_{DS(on)}$ =3.3 mΩ	
						IPA040N06N [2] $R_{DS(on)}$ =4.0 mΩ		
4-10		IRFS3306 $R_{DS(on)}$ =4.2 mΩ			IPP040N06N [2] $R_{DS(on)}$ =4.0 mΩ	IPA040N06N M5S $R_{DS(on)}$ =4.0 mΩ		
					IRFB3306PBF $R_{DS(on)}$ =4.2 mΩ		IRFP3306PBF $R_{DS(on)}$ =4.2 mΩ	
	IRFR7540TRPBF $R_{DS(on)}$ =4.8 mΩ	IRFS7540TRLPBF $R_{DS(on)}$ =5.1 mΩ			IRFB7540PBF $R_{DS(on)}$ =5.1 mΩ			
	IPD053N06N [2] $R_{DS(on)}$ =5.3 mΩ							
		IPB057N06N [2] $R_{DS(on)}$ =5.7 mΩ			IRFB7545PBF $R_{DS(on)}$ =5.9 mΩ			
	IRFR7546TRPBF $R_{DS(on)}$ =7.9 mΩ	IRF1018ES $R_{DS(on)}$=8.4 mΩ			IPP060N06N [2] $R_{DS(on)}$ =6.0 mΩ	IPA060N06N [2] $R_{DS(on)}$ =6.0 mΩ		
	IRFR1018E $R_{DS(on)}$=8.4 mΩ				IRFB7546PBF $R_{DS(on)}$ =7.3 mΩ			
					IRF1018EPBF $R_{DS(on)}$ =8.4 mΩ	IPA060N06NM5S $R_{DS(on)}$ =6.0 mΩ		
					IRF60B217 $R_{DS(on)}$ =9.0 mΩ			
	IRF60R217 $R_{DS(on)}$ =9.9 mΩ							
>10	IRFR3806 $R_{DS(on)}$ =15.8 mΩ	IRFS3806 $R_{DS(on)}$ =15.8 mΩ			IRFB3806PBF $R_{DS(on)}$ =15.8 mΩ			

2) 6 V rated ($R_{DS(on)}$ also specified @ V_{GS}=6 V)

For more details on the product, click on the part number or contact our product support.

OptiMOS™ and StrongIRFET™ 60 V normal level

$R_{DS(on)}$, max. @V_{GS}=10 V [mΩ]	DirectFET™	PQFN 3.3 x 3.3	SO-8	SuperSO8	TO-Leadless	sTOLL	TOLG (TO-Leaded Gullwing)
< 1					IPT007N06N [1] $R_{DS(on)}$ =0.7 mΩ	IST011N06NM5 $R_{DS(on)}$ = 1.1 mΩ	IPTG007N06NM5 $R_{DS(on)}$ = 0.75 mΩ
1-2	IRF7749L1TRPBF $R_{DS(on)}$ =1.5 mΩ			BSC012N06NS $R_{DS(on)}$ =1.2 mΩ	IPT012N06N [1] $R_{DS(on)}$ =1.2 mΩ		
				BSC014N06NS [1] $R_{DS(on)}$ =1.4 mΩ			
				BSC014N06NST [1] $R_{DS(on)}$ =1.45 mΩ			
				BSC016N06NST [1] $R_{DS(on)}$ =1.6 mΩ			
				BSC016N06NS [1] $R_{DS(on)}$ =1.6 mΩ			
				BSC019N06NS [1] $R_{DS(on)}$ =1.9 mΩ			
2-4	IRF7748L1TRPBF $R_{DS(on)}$ =2.2 mΩ	BSZ039N06NS $R_{DS(on)}$=3.9 mΩ		BSC028N06NS [1] $R_{DS(on)}$ =2.8 mΩ			
				BSC028N06NST[1] $R_{DS(on)}$ =2.8 mΩ			
	IRF60DM206 $R_{DS(on)}$ =2.9 mΩ			IRFH7085TRPBF $R_{DS(on)}$ =3.2 mΩ			
				BSC034N06NS [1] $R_{DS(on)}$ =3.4 mΩ			
				BSC039N06NS [1] $R_{DS(on)}$ =3.9 mΩ			
	IRF6648 $R_{DS(on)}$ =7.0 mΩ	BSZ042N06NS [1] $R_{DS(on)}$ =4.2 mΩ	IRF7855TRPBF $R_{DS(on)}$=9.4 mΩ	IRFH7545TRPBF $R_{DS(on)}$ =5.2 mΩ			
	IRF6674 $R_{DS(on)}$ =11.0 mΩ			BSC066N06NS [1] $R_{DS(on)}$ =6.6 mΩ			
		BSZ068N06NS [1] $R_{DS(on)}$ =6.8 mΩ		BSC097N06NS [1] $R_{DS(on)}$ =9.7 mΩ			
		BSZ100N06NS [1] $R_{DS(on)}$ =10.0 mΩ		BSC097N06NST [1] $R_{DS(on)}$=9.7 mΩ			
> 10				IRFH5406TRPBF $R_{DS(on)}$=14.4 mΩ			

OptiMOS™ and StrongIRFET™ 60 V logic level

$R_{DS(on)}$, max. @V_{GS}=10 V [mΩ]	TO-252 (DPAK)	TO-263 (D^2PAK)	TO-263 (D^2PAK 7-pin)	TO-262 (I^2PAK)	TO-220	PQFN 2 x 2	PQFN 3.3 x 3.3	SuperSO8
1-2			IRL60SC216 $R_{DS(on)}$ =1.5 mΩ					ISC009N06LM5 $R_{DS(on)}$ = 0.9 mΩ
								ISC011N06LM5 $R_{DS(on)}$ = 1.1 mΩ
		IRL60S216 $R_{DS(on)}$ =1.95 mΩ	IRLS3036TRL7PP $R_{DS(on)}$ =1.9 mΩ	IRL60SL216 $R_{DS(on)}$ =1.95 mΩ	IRL60B216 $R_{DS(on)}$ =1.9 mΩ		ISZ034N06LM5 $R_{DS(on)}$ = 3.4 mΩ	
2-4		IRLS3036TRLPBF $R_{DS(on)}$ =2.4 mΩ			IRLB3036PBF $R_{DS(on)}$ =2.4 mΩ		BSZ037N06LS5 $R_{DS(on)}$ =3.7 mΩ	BSC027N06LS5 $R_{DS(on)}$ =2.7 mΩ
4-10							BSZ040N06LS5 $R_{DS(on)}$ =4.0 mΩ	IRLH5036TRPBF $R_{DS(on)}$ =4.4 mΩ
	IRLR3636TRPBF $R_{DS(on)}$ =6.8 mΩ						BSZ065N06LS5 $R_{DS(on)}$ =6.5 mΩ	BSC065N06LS5 $R_{DS(on)}$=6.5 mΩ
							BSZ099N06LS5 $R_{DS(on)}$ =9.9 mΩ	BSC094N06LS5 $R_{DS(on)}$ =9.4 mΩ
>10						IRL60HS118 $R_{DS(on)}$=17.0 mΩ		

1) 6 V rated ($R_{DS(on)}$ also specified @ V_{GS} = 6 V)

For more details on the product, click on the part number or contact our product support.

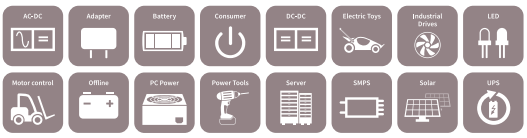

OptiMOS™ and StrongIRFET™ 75 V normal level

$R_{DS(on)}$, max. @V_{GS}=10 V [mΩ]	TO-252 (DPAK)	TO-263 (D^2PAK)	TO-263 (D^2PAK 7-pin)	TO-220	TO-247	DirectFET™	SuperSO8
1-2			IRFS7730TRL7PP $R_{DS(on)}$ =2.0 mΩ		IRFP7718PBF $R_{DS(on)}$ =1.8 mΩ		
					IRFP4368PBF $R_{DS(on)}$ =1.85 mΩ		
2-4		IRFS7730TRLPBF $R_{DS(on)}$ =2.6 mΩ	IRFS3107TRL7PP $R_{DS(on)}$ =2.6 mΩ		IRFP3077PBF $R_{DS(on)}$ =3.3 mΩ	IRF7759L2TRPBF $R_{DS(on)}$ =2.3 mΩ	
		IRFS3107TRLPBF $R_{DS(on)}$ =3.0 mΩ		IRFB7730PBF $R_{DS(on)}$ =2.6 mΩ			
			IRFS7734TRL7PP $R_{DS(on)}$ =3.05 mΩ	IRFB3077PBF $R_{DS(on)}$ =3.3 mΩ			
		IRFS7734TRLPBF $R_{DS(on)}$ =3.5 mΩ					
				IRFB7734PBF $R_{DS(on)}$ =3.5 mΩ			
4-10		IRFS3207ZTRLPBF $R_{DS(on)}$ =4.1 mΩ		IRFB3207ZPBF $R_{DS(on)}$ =4.5 mΩ			
		IRFS3307ZTRLPBF $R_{DS(on)}$ =5.8 mΩ		IRFB3307ZPBF $R_{DS(on)}$ =5.8 mΩ			
		IRFS7762TRLPBF $R_{DS(on)}$ =6.7 mΩ				IRF7780MTRPBF $R_{DS(on)}$ =5.7 mΩ	IRFH5007TRPBF $R_{DS(on)}$ =5.9 mΩ
	IRFR7740TRPBF $R_{DS(on)}$ =7.2 mΩ			IRFB7740PBF $R_{DS(on)}$ =7.3 mΩ			
		IRFS7787TRLPBF $R_{DS(on)}$ =8.4 mΩ		IRFB7787PBF $R_{DS(on)}$ =8.4 mΩ			IRFH7787TRPBF $R_{DS(on)}$ =8.0 mΩ
	IRFR3607PBF $R_{DS(on)}$ =9.0 mΩ	IRFS3607TRLPBF $R_{DS(on)}$=9.0 mΩ		IRFB3607PBF $R_{DS(on)}$ =9.0 mΩ			
>10	IRFR7746TRPBF $R_{DS(on)}$ =11.2 mΩ			IRFB7746PBF $R_{DS(on)}$ =10.6 mΩ		BSF450NE7NH3 [1)] $R_{DS(on)}$ =45.0 mΩ	

OptiMOS™ and StrongIRFET™ 80 V normal level / logic level

$R_{DS(on)}$, max. @V_{GS}=10 V [mΩ]	TO-252 (DPAK)	TO-263 (D^2PAK)	TO-263 (D^2PAK 7-pin)	TO-220	TO-220 FullPAK	DirectFET™	PQFN 2 x 2	PQFN 3.3 x 3.3	SuperSO8	TO-Leadless
1-2		IPB017N08N5 $R_{DS(on)}$ =1.7 mΩ	IPB015N08N5 $R_{DS(on)}$ =1.5 mΩ	IPP016N08NF2S $R_{DS(on)}$=1.6 mΩ					BSC019N08NS5 $R_{DS(on)}$=1.9 mΩ	IPT010N08NM5 $R_{DS(on)}$=1.0 mΩ
			IPB019N08N3 G $R_{DS(on)}$ =1.9 mΩ	IPP019N08NF2S $R_{DS(on)}$=1.9 mΩ						
		IPB020N08N5 $R_{DS(on)}$ =2.0 mΩ	IPB019N08N5 $R_{DS(on)}$ =1.95 mΩ	IPP020N08N5 $R_{DS(on)}$ =2.0 mΩ						IPT012N08N5 $R_{DS(on)}$ =1.2 mΩ
2-4				IPP024N08NF2S $R_{DS(on)}$=2.4 mΩ					BSC021N08NS5 $R_{DS(on)}$ =2.1 mΩ	IPT014N08NM5 $R_{DS(on)}$=1.4 mΩ
		IPB024N08N5 $R_{DS(on)}$ =2.4 mΩ		IPP023N08N5 $R_{DS(on)}$ =2.3 mΩ					BSC025N08LS5 $R_{DS(on)}$ =2.5 mΩ	IPT019N08N5 $R_{DS(on)}$ =1.9 mΩ
				IPP027N08N5 $R_{DS(on)}$ =2.7 mΩ					BSC026N08NS5 $R_{DS(on)}$ =2.6 mΩ	
									BSC030N08NS5 $R_{DS(on)}$ =3.0 mΩ	IPT029N08N5 $R_{DS(on)}$ =2.9 mΩ
		IPB031N08N5 $R_{DS(on)}$ =3.1 mΩ		IPP034N08N5 $R_{DS(on)}$ =3.4 mΩ					BSC037N08NS5 $R_{DS(on)}$ =3.7 mΩ	
									BSC037N08NS5T $R_{DS(on)}$= 3.7 mΩ	
4-10				IPP040N08NF2S $R_{DS(on)}$=4.0 mΩ					BSC040N08NS5 $R_{DS(on)}$ =4.0 mΩ	
	IPD046N08N5 $R_{DS(on)}$=4.6 mΩ	IPB049N08N5 $R_{DS(on)}$ =4.9 mΩ		IPP052N08N5 $R_{DS(on)}$ =5.2 mΩ	IPA040N08NM5S $R_{DS(on)}$ =4.0 mΩ					
					IPA052N08NM5S $R_{DS(on)}$ =5.2 mΩ				BSC052N08NS5 $R_{DS(on)}$ =5.2 mΩ	
				IPP055N08NF2S $R_{DS(on)}$=5.5 mΩ				BSZ070N08LS5 $R_{DS(on)}$ =7.0 mΩ		
						IRF6646TRPBF $R_{DS(on)}$ =9.5 mΩ		BSZ075N08NS5 $R_{DS(on)}$ =7.5 mΩ	BSC061N08NS5 $R_{DS(on)}$ =6.1 mΩ	
						IRF7854TRPBF $R_{DS(on)}$ =9.5 mΩ		BSZ084N08NS5 $R_{DS(on)}$ =8.4 mΩ	BSC072N08NS5 $R_{DS(on)}$ =7.2 mΩ	
>10							IRL80HS120 $R_{DS(on)}$=32.0 mΩ	BSZ110N08NS5 $R_{DS(on)}$ =11.0 mΩ	BSC117N08NS5 $R_{DS(on)}$ =11.7 mΩ	

1) DirectFET™ S

For more details on the product, click on the part number or contact our product support.

OptiMOS™ and StrongIRFET™ 80 V normal level / logic level

$R_{DS(on), max.}$ @V_{GS}=10 V [mΩ]	TOLG (TO-Leaded Gullwing)	TOLT (TO-Leaded top-side cooling)	sTOLL
1-2	IPTG011N08NM5 $R_{DS(on)}$ = 1.1 mΩ	IPTC012N08NM5 $R_{DS(on)}$= 1.2 mΩ	IST019N08NM5 $R_{DS(on)}$ = 1.9mΩ
	IPTG018N08NM5 $R_{DS(on)}$= 1.8 mΩ	IPTC014N08NM5 $R_{DS(on)}$ = 1.4 mΩ	
	IPTG025N08NM5 $R_{DS(on)}$= 2.5 mΩ		

OptiMOS™ and StrongIRFET™ 100 V normal level

$R_{DS(on), max.}$ @V_{GS}=10 V [mΩ]	TO-252 (DPAK)	TO-263 (D^2PAK)	TO-263 (D^2PAK 7-pin)	TO-220	TO-220 FullPAK	TO-247
1-2		IPB020N10N5 $R_{DS(on)}$ =2.0 mΩ	IPB017N10N5 $R_{DS(on)}$ =1.7 mΩ			IRF100P218 $R_{DS(on)}$=1.1 mΩ
		IPB020N10N5LF $R_{DS(on)}$=2.0 mΩ	IPB017N10N5LF $R_{DS(on)}$=1.7 mΩ			IRF100P219 $R_{DS(on)}$=2.1 mΩ
2-4			IPB024N10N5 $R_{DS(on)}$ =2.4 mΩ	IPP023N10N5 $R_{DS(on)}$ =2.3 mΩ	IPA030N10NF2S $R_{DS(on)}$=3.0 mΩ	IRFP4468PBF $R_{DS(on)}$ =2.6 mΩ
		IPB027N10N5 $R_{DS(on)}$ =2.7 mΩ		IPP026N10NF2S $R_{DS(on)}$=2.6 mΩ		
		IPB033N10N5LF $R_{DS(on)}$ =3.3 mΩ	IPB032N10N5 $R_{DS(on)}$ =3.2 mΩ	IPP030N10N5 $R_{DS(on)}$=3.0 mΩ		
				IPP039N10N5 $R_{DS(on)}$=3.9 mΩ		
4-10	IPD050N10N5 $R_{DS(on)}$=5.0 mΩ		IRFS4010TRL7PP $R_{DS(on)}$ =4.0 mΩ	IRF100B201 $R_{DS(on)}$ =4.2 mΩ		IRFP4110PBF $R_{DS(on)}$ =4.5 mΩ
		IRF100S201 $R_{DS(on)}$ =4.2 mΩ		IRFB4110PBF $R_{DS(on)}$ =4.5 mΩ	IPA050N10NM5S $R_{DS(on)}$ =5.0 mΩ	IRFP4310ZPBF $R_{DS(on)}$ =6.0 mΩ
		IRFS4010TRLPBF $R_{DS(on)}$ =4.7 mΩ		IPP050N10NF2S $R_{DS(on)}$=5.0 mΩ		
				IRFB4310ZPBF $R_{DS(on)}$ =6.0 mΩ	IPA082N10NF2S $R_{DS(on)}$=8.2 mΩ	
		IRFS4310ZTRLPBF $R_{DS(on)}$ =7.0 mΩ		IPP082N10NF2S $R_{DS(on)}$=8.2 mΩ	IPA083N10N5 $R_{DS(on)}$ =8.3 mΩ	
				IPP083N10N5 $R_{DS(on)}$ =8.3 mΩ	IPA083N10NM5S $R_{DS(on)}$ =8.3 mΩ	
				IRF100B202 $R_{DS(on)}$ =8.6 mΩ		
		IRFS4410ZTRLPBF $R_{DS(on)}$ =9.0 mΩ		IRFS4410ZTRLPBF $R_{DS(on)}$ =9.0 mΩ		
				IRFB4410ZPBF $R_{DS(on)}$ =9.0 mΩ		
10-25				IPP129N10NF2S $R_{DS(on)}$=12.9 mΩ		
	IRFR4510TRPBF $R_{DS(on)}$ =13.9 mΩ	IRFS4510TRLPBF $R_{DS(on)}$ =13.9 mΩ		IRFB4510PBF $R_{DS(on)}$ =13.5 mΩ	IPA126N10NM3S $R_{DS(on)}$ =12.6 mΩ	
>25	IPD78CN10N G $R_{DS(on)}$ =78.0 mΩ					

For more details on the product, click on the part number or contact our product support.

OptiMOS™ and StrongIRFET™ 100 V normal level

$R_{DS(on)}$, max. @V_{GS}=10 V [mΩ]	DirectFET™	PQFN 3.3 x 3.3	SuperSO8	SuperSO8 super cool	SO-8	TO-Leadless	TOLT (TO-Leaded top-side cooling)	TOLG (TO-Leaded Gullwing)	sTOLL
1-2						IPT015N10N5 $R_{DS(on)}$ =1.5 mΩ	IPTC015N10NM5 $R_{DS(on)}$ = 1.5 mΩ	IPTG014N10NM5 $R_{DS(on)}$ = 1.4 mΩ	
							IPTG018N10NM5 $R_{DS(on)}$ = 1.8 mΩ		
							IPTC019N10NM5 $R_{DS(on)}$ = 1.9 mΩ		
2-4			BSC027N10NS5 $R_{DS(on)}$ =2.7 mΩ				IPTG025N10NM5 $R_{DS(on)}$ = 2.5 mΩ		
						IPT020N10N5 $R_{DS(on)}$ =2.0 mΩ			
	IRF7769L1TRPBF $R_{DS(on)}$ =3.5 mΩ		BSC035N10NS5 $R_{DS(on)}$ =3.5 mΩ	BSC040N10NS5SC $R_{DS(on)}$ =4.0 mΩ		IPT026N10N5 $R_{DS(on)}$ =2.6 mΩ			IST026N10NM5 $R_{DS(on)}$ = 2.6 mΩ
			BSC040N10NS5 $R_{DS(on)}$ =4.0 mΩ						
4-10			BSC050N10N5 $R_{DS(on)}$ =5.0 mΩ						
				BSC070N10NS5SC $R_{DS(on)}$ =7.0 mΩ					
			BSC070N10NS5 $R_{DS(on)}$ =7.0 mΩ						
			IRFH5010TRPBF $R_{DS(on)}$ =9.0 mΩ						
		BSZ097N10NS5 $R_{DS(on)}$ =9.7 mΩ	BSC098N10NS5 $R_{DS(on)}$ =9.8 mΩ						
10-25	IRF6644TRPBF $R_{DS(on)}$ =13.0 mΩ								
			IRFH5110TRPBF $R_{DS(on)}$ =12.4 mΩ						
			IRFH5210TRPBF $R_{DS(on)}$ =14.9 mΩ						
	IRF6662TRPBF $R_{DS(on)}$ =22.0 mΩ				IRF7853TRPBF $R_{DS(on)}$ =18.0 mΩ				
>25	IRF6645TRPBF $R_{DS(on)}$ =35.0 mΩ								
	IRF6665TRPBF $R_{DS(on)}$ =63.0 mΩ	IRFHM3911TRPBF $R_{DS(on)}$ = 115 mΩ							

OptiMOS™ and StrongIRFET™ 100 V logic level

$R_{DS(on)}$, max. @V_{GS}=10 V [mΩ]	TO-252 (DPAK)	TO-263 (D^2PAK)	TO-263 (D^2PAK 7-pin)	TO-220	PQFN 2 x 2	PQFN 3.3 x 3.3	SuperSO8
2-4			IRLS4030TRL7PP $R_{DS(on)}$ =3.9 mΩ				BSC034N10LS5 $R_{DS(on)}$ =3.4 mΩ
4-10		IRLS4030TRLPBF $R_{DS(on)}$ =4.3 mΩ		IRLB4030PBF $R_{DS(on)}$ =4.3 mΩ		BSZ096N10LS5 $R_{DS(on)}$ =9.6 mΩ	BSC070N10LS5 $R_{DS(on)}$=7.0 mΩ
							IRLH5030TRPBF $R_{DS(on)}$=9.0 mΩ
							BSC096N10LS5 $R_{DS(on)}$=9.6 mΩ
10-25						BSZ146N10LS5 $R_{DS(on)}$ =14.6 mΩ	
	IRLR3110ZTRPBF $R_{DS(on)}$ =14.0 mΩ						BSC146N10LS5 $R_{DS(on)}$ =14.6 mΩ
>25					IRL100HS121 $R_{DS(on)}$=42.0 mΩ		

For more details on the product, click on the part number or contact our product support.

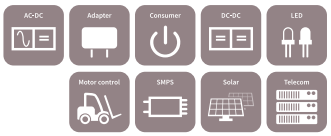

OptiMOS™ and StrongIRFET™ 120 V normal level / logic level

$R_{DS(on)}$, max. @V_{GS}=10 V [mΩ]	TO-252 (DPAK)	TO-263 (D^2PAK)	TO-263 (D^2PAK 7-pin)	TO-262 (I^2PAK)	TO-220	PQFN 3.3 x 3.3	SuperSO8	TO-Leadless (TOLL)
2-4		IPB038N12N3 G $R_{DS(on)}$=3.8 mΩ	IPB036N12N3 G $R_{DS(on)}$=3.6 mΩ					IPT030N12N3 G $R_{DS(on)}$=3.0 mΩ
4-10				IPI041N12N3 G $R_{DS(on)}$=4.1 mΩ	IPP041N12N3 G $R_{DS(on)}$=4.1 mΩ		BSC077N12NS3 G $R_{DS(on)}$=7.7 mΩ	
					IPP048N12N3 G $R_{DS(on)}$=4.8 mΩ		BSC080N12LS* $R_{DS(on)}$=8.0 mΩ	
				IPI076N12N3 G $R_{DS(on)}$=7.6 mΩ	IPP076N12N3 G $R_{DS(on)}$=7.6 mΩ			
10-25	IPD110N12N3 G $R_{DS(on)}$=11.0 mΩ				IPP114N12N3 G $R_{DS(on)}$=11.4 mΩ		BSC120N12LS* $R_{DS(on)}$=12.0 mΩ	
		IPB144N12N3 G $R_{DS(on)}$=14.4 mΩ			IPP147N12N3 G $R_{DS(on)}$=14.7 mΩ	BSZ240N12NS3 G $R_{DS(on)}$=24.0 mΩ	BSC190N12NS3 G $R_{DS(on)}$=19.0 mΩ	

* logic level devices

For more details on the product, click on the part number or contact our product support.

OptiMOS™ and StrongIRFET™ 135-150 V normal level

$R_{DS(on), max.}$ @V_{GS}=10 V [mΩ]	DirectFET™	PQFN 3.3 x 3.3	SuperSO8	TO-Leadless
4-10			BSC074N15NS5 [2] $R_{DS(on)}$ =7.4 mΩ	IPT059N15N3 $R_{DS(on)}$ = 5.9 mΩ
			BSC093N15NS5 $R_{DS(on)}$ =9.3 mΩ	
10-25	IRF7779L2TRPBF [2] $R_{DS(on)}$ =11.0 mΩ		BSC110N15NS5 $R_{DS(on)}$ =11.0 mΩ	
			BSC160N15NS5 $R_{DS(on)}$ =16.0 mΩ	
>25		BSZ300N15NS5 $R_{DS(on)}$ =30.0 mΩ	IRFH5015TRPBF $R_{DS(on)}$ =31.0 mΩ	
	IRF6643TRPBF $R_{DS(on)}$ =34.5 mΩ		IRFH5215TRPBF $R_{DS(on)}$ =58.0 mΩ	
	IRF6775MTRPBF $R_{DS(on)}$ =56.0 mΩ			

OptiMOS™ and StrongIRFET™ 135-150 V normal level

$R_{DS(on), max.}$ @V_{GS}=10 V [mΩ]	TO-252 (DPAK)	TO-263 (D^2PAK)	TO-263 (D^2PAK 7-pin)	TO-262 (I^2PAK)	TO-220	TO-247
4-10		IPB048N15N5 $R_{DS(on)}$=4.8 mΩ	IPB044N15N5 $R_{DS(on)}$=4.4 mΩ	IPI051N15N5 $R_{DS(on)}$=5.1 mΩ	IPP051N15N5 [2] $R_{DS(on)}$=5.1 mΩ	IRF150P220 $R_{DS(on)}$=2.5mΩ
		IPB048N15N5LF $R_{DS(on)}$=4.8 mΩ	IRF135SA204 [2] $R_{DS(on)}$ =5.9 mΩ			IRF150P221 $R_{DS(on)}$=4.8mΩ
			IPB060N15N5 $R_{DS(on)}$=6.0 mΩ			IRFP4568PBF $R_{DS(on)}$ =5.9 mΩ
		IPB073N15N5 $R_{DS(on)}$=7.3 mΩ		IPI076N15N5 $R_{DS(on)}$=7.6 mΩ	IPP076N15N5 $R_{DS(on)}$=7.6 mΩ	
		IPB083N15N5LF $R_{DS(on)}$=8.3 mΩ				
		IRF135S203 2) $R_{DS(on)}$ =8.4 mΩ			IRF135B203 2) $R_{DS(on)}$ =8.4 mΩ	
					IRFB4115PBF $R_{DS(on)}$ =11.0 mΩ	
10-25			IRFS4115TRL7PP $R_{DS(on)}$ =11.8 mΩ			
		IRFS4321 $R_{DS(on)}$ =15.0 mΩ			IRFB4321PBF $R_{DS(on)}$ =15.0 mΩ	IRFP4321PBF $R_{DS(on)}$ =15.5 mΩ
		IRFS4115TRLPBF $R_{DS(on)}$ =12.1 mΩ			IRFB4228PBF $R_{DS(on)}$ =15.0 mΩ	
>25		IRFS4615PBF $R_{DS(on)}$ =42.0 mΩ			IRFB4615PBF $R_{DS(on)}$ =39.0 mΩ	
	IRFR4615 $R_{DS(on)}$ =42.0 mΩ				IRFB5615PBF $R_{DS(on)}$ =39.0 mΩ	
					IPP530N15N3 G [1] $R_{DS(on)}$ =53.0 mΩ	
					IRFB4019PBF $R_{DS(on)}$ =95.0 mΩ	

1) 8 V rated ($R_{DS(on)}$ also specified @ V_{GS} = 8 V)
2) 135 V

For more details on the product, click on the part number or contact our product support.

OptiMOS™ and StrongIRFET™ 200 V normal level

$R_{DS(on), max.}$ @V_{GS}=10 V [mΩ]	TO-252 (DPAK)	TO-263 (D^2PAK)	TO-262 (I^2PAK)	TO-220	TO-220 FullPAK	TO-247
4-10						IRF200P222 $R_{DS(on)}$=6.6 mΩ
						IRFP4668PBF $R_{DS(on)}$ =9.7 mΩ
10-25		IPB107N20N3 G $R_{DS(on)}$ =10.7 mΩ	IPI110N20N3 G $R_{DS(on)}$ =11.0 mΩ	IPP110N20N3 G $R_{DS(on)}$ =11.0 mΩ		IRF200P223 $R_{DS(on)}$=11.5 mΩ
		IPB110N20N3LF $R_{DS(on)}$=11.0 mΩ				
		IPB117N20NFD $R_{DS(on)}$ =11.7 mΩ		IPP120N20NFD $R_{DS(on)}$ =12.0 mΩ		IRFP4127PBF $R_{DS(on)}$ =21.0 mΩ
		IPB156N22NFD [1] $R_{DS(on)}$ =15.6 mΩ		IRFB4127PBF $R_{DS(on)}$ =20.0 mΩ		IRFP4227PBF $R_{DS(on)}$ =25.0 mΩ
		IRF200S234 $R_{DS(on)}$ = 16.9 mΩ				
		IRFS4127TRLPBF $R_{DS(on)}$ =22.0 mΩ				
>25		IRFS4227TRLPBF $R_{DS(on)}$ =26.0 mΩ		IRFB4227PBF $R_{DS(on)}$ =26.0 mΩ	IPA320N20NM3S $R_{DS(on)}$ =32.0 mΩ	
	IPD320N20N3 G $R_{DS(on)}$ =32.0 mΩ	IPB320N20N3 G $R_{DS(on)}$ =32.0 mΩ	IPI320N20N3 G $R_{DS(on)}$ =32.0 mΩ	IPP320N20N3 G $R_{DS(on)}$ =32.0 mΩ		
				IRFB4620PBF $R_{DS(on)}$ =72.5 mΩ		
	IRFR4620TRLPBF $R_{DS(on)}$ =78.0 mΩ	IRFS4620TRLPBF $R_{DS(on)}$ =78.0 mΩ		IRFB5620PBF $R_{DS(on)}$ =72.5 mΩ		
		IRFS4020TRLPBF $R_{DS(on)}$ =105.0 mΩ		IRFB4020PBF $R_{DS(on)}$ =100.0 mΩ		
				IRF200B211 $R_{DS(on)}$ =170.0 mΩ		

OptiMOS™ and StrongIRFET™ 200 V normal level

$R_{DS(on), max.}$ @V_{GS}=10 V [mΩ]	DirectFET™	PQFN 3.3 x 3.3	SuperSO8	SO-8	TO-Leadless	TOLG (TO-Leaded Gullwing)
10-25			BSC220N20NSFD $R_{DS(on)}$=22.0 mΩ		IPT111N20NFD $R_{DS(on)}$=11.1 mΩ	IPTG111N20NM3FD $R_{DS(on)}$ = 11.1 mΩ
>25			BSC320N20NS3 G $R_{DS(on)}$ =32.0 mΩ			
			BSC350N20NSFD $R_{DS(on)}$=35.0 mΩ			
			BSC500N20NS3G $R_{DS(on)}$ =50.0 mΩ			
	IRF6641TRPBF $R_{DS(on)}$ =59.9 mΩ		IRFH5020 $R_{DS(on)}$ =55.0 mΩ			
		BSZ900N20NS3 G $R_{DS(on)}$ =90.0 mΩ	BSC900N20NS3 G $R_{DS(on)}$ =90.0 mΩ	IRF7820TRPBF $R_{DS(on)}$ =78.0 mΩ		
	IRF6785TRPBF $R_{DS(on)}$ =100.0 mΩ	BSZ12DN20NS3 G $R_{DS(on)}$ =125.0 mΩ	BSC12DN20NS3 G $R_{DS(on)}$ =125.0 mΩ			
		BSZ22DN20NS3 G $R_{DS(on)}$ =225.0 mΩ	BSC22DN20NS3 G $R_{DS(on)}$ =225.0 mΩ			

1) 220 V rated

For more details on the product, click on the part number or contact our product support.

OptiMOS™ and StrongIRFET™ 250 V normal level

$R_{DS(on)}$, max. @V_{GS}=10 V [mΩ]	TO-252 (DPAK)	TO-263 (D^2PAK)	TOLG (TO-Leaded Gullwing)	TO-220	TO-220 FullPAK	TO-247	PQFN 3.3 x 3.3	SuperSO8	TO-Leadless
10-25		IPB200N25N3 G $R_{DS(on)}$ =20.0 mΩ	IPTG210N25NM3FD $R_{DS(on)}$ = 21 mΩ	IPP200N25N3 G $R_{DS(on)}$ =20.0 mΩ		IRF250P224 $R_{DS(on)}$=12.0 mΩ			
				IPP220N25NFD $R_{DS(on)}$ =22.0 mΩ		IRFP4768PBF $R_{DS(on)}$ =17.5 mΩ			IPT210N25NFD $R_{DS(on)}$=21.0 mΩ
						IRF250P225 $R_{DS(on)}$=22.0 mΩ			
>25								BSC430N25NSFD $R_{DS(on)}$=43.0 mΩ	
		IRFS4229TRLPBF $R_{DS(on)}$ =48.0 mΩ		IRFB4332PBF $R_{DS(on)}$ =33.0 mΩ		IRFP4332PBF $R_{DS(on)}$ =33.0 mΩ		BSC600N25NS3 G $R_{DS(on)}$ =60.0 mΩ	
	IPD600N25N3 G $R_{DS(on)}$ =60.0 mΩ	IPB600N25N3 G $R_{DS(on)}$ =60.0 mΩ		IRFB4229PBF $R_{DS(on)}$ =46.0 mΩ				BSC670N25NSFD $R_{DS(on)}$=67.0 mΩ	
				IPP600N25N3 G $R_{DS(on)}$ =60.0 mΩ	IPA600N25NM3S $R_{DS(on)}$=60.0 mΩ	IRFP4229PBF $R_{DS(on)}$ =46.0 mΩ	BSZ16DN25NS3 G $R_{DS(on)}$ =165.0 mΩ	IRFH5025 $R_{DS(on)}$ =100.0 mΩ	
							BSZ42DN25NS3 G $R_{DS(on)}$ =425.0 mΩ	BSC16DN25NS3 G $R_{DS(on)}$ =165.0 mΩ	

OptiMOS™ and StrongIRFET™ 300 V normal level

$R_{DS(on)}$, max. @ V_{GS}=10 V [mΩ]	TO-263 (D^2PAK)	TO-220	TO-247	SuperSO8
0-25			IRF300P226 $R_{DS(on)}$=19.0 mΩ	
>25	IPB407N30N $R_{DS(on)}$ =40.7 mΩ	IPP410N30N $R_{DS(on)}$ =41.0 mΩ	IRFP4868PBF $R_{DS(on)}$ =32.0 mΩ	
			IRF300P227 $R_{DS(on)}$=40.0 mΩ	
		IRFB4137PBF $R_{DS(on)}$ =69.0 mΩ	IRFP4137PBF $R_{DS(on)}$ =69.0 mΩ	BSC13DN30NSFD $R_{DS(on)}$=130.0 mΩ

Power MOSFETs complementary

Voltage [V]			PQFN 3.3 x 3.3	SO-8
Complementary	-20/20	>50 mΩ	BSZ15DC02KD H*/** N: 55 mΩ, 5.1 A P: 150 mΩ, -3.2 A	
			BSZ215C H*/** N: 55 mΩ, 5.1 A P: 150 mΩ, -3.2 A	
	-30/30	27-64 mΩ		IRF9389 N: 27 mΩ, 6.8 A P: 64 mΩ, -4.6 A
	-60/60	11-30 Ω		BSO612CV G* N: 0.12 Ω, 3.0 A P: 0.30 Ω, -2.0 A
				BSO615C G* N: 0.11 Ω, 3.1 A P: 0.30 Ω, -2.0 A

*Products are qualified to Automotive AEC Q101
**$R_{DS(on)}$ specified at 4.5 V

For more details on the product, click on the part number or contact our product support.

Power P-channel MOSFETs

	Voltage [V]	TO-252 (DPAK)	TO-263 (D^2PAK)	TO-220	PQFN 3.3 x 3.3	SuperSO8	SO-8	PQFN 2 x 2
P-channel MOSFETs	-20						BSO201SP H $R_{DS(on)}$ =7.0 mΩ	
								IRLHS2242TRPBF** $R_{DS(on)}$ =31.0 mΩ
	-30					BSC030P03NS3 G $R_{DS(on)}$ =3.0 mΩ	IRF9310 $R_{DS(on)}$=4.6 mΩ	
		IPD042P03L3 G $R_{DS(on)}$ =4.2 mΩ				BSC060P03NS3E G $R_{DS(on)}$ =6.0 mΩ; ESD	IRF9317 $R_{DS(on)}$=6.6 mΩ	
					BSZ086P03NS3 G $R_{DS(on)}$ =8.6 mΩ		IRF9321 $R_{DS(on)}$=7.2 mΩ	
		SPD50P03L G [1)]* $R_{DS(on)}$ =7.0 mΩ			BSZ086P03NS3E G $R_{DS(on)}$ =8.6 mΩ		BSO080P03NS 3 G $R_{DS(on)}$ =8.0 mΩ	
						BSC084P03NS3 G $R_{DS(on)}$ =8.4 mΩ		
							BSO080P03S H $R_{DS(on)}$ =8.0 mΩ	
					BSZ120P03NS3 G $R_{DS(on)}$ =12.0 mΩ		BSO301SP H $R_{DS(on)}$ =8.0 mΩ	
							IRF9328 $R_{DS(on)}$=11.9 mΩ	
							IRF9388TRPBF $R_{DS(on)}$=11.9 mΩ	
							IRF9358 $R_{DS(on)}$=16 mΩ; dual	
							IRF9332 $R_{DS(on)}$=17.5 mΩ	
					BSZ180P03NS3 G $R_{DS(on)}$ =18.0 mΩ		IRF9333 $R_{DS(on)}$=19.4 mΩ	
					BSZ180P03NS3E G $R_{DS(on)}$ =18.0 mΩ; ESD			
								IRFHS9301TRPBF $R_{DS(on)}$ =37.0 mΩ
							IRF9362 $R_{DS(on)}$=21 mΩ; dual	IRFHS9351TRPBF $R_{DS(on)}$ =170.0 mΩ; dual
							IRF9335 $R_{DS(on)}$=59 mΩ	
	-60	IPD380P06NM $R_{DS(on)}$= 38 mΩ	IPB110P06LM $R_{DS(on)}$= 11 mΩ	SPP80P06P H* $R_{DS(on)}$ =23.0 mΩ				
		IPD650P06NM $R_{DS(on)}$= 65 mΩ	SPB80P06P G* $R_{DS(on)}$ =23.0 mΩ					
		SPD30P06P G* $R_{DS(on)}$ =75.0 mΩ						
		IPD900P06NM $R_{DS(on)}$ = 90 mΩ						
		SPD18P06P G* $R_{DS(on)}$ =130.0 mΩ	SPB18P06P G* $R_{DS(on)}$ =130.0 mΩ	SPP18P06P H* $R_{DS(on)}$ =130.0 mΩ			BSO613SPV G* $R_{DS(on)}$ =130.0 mΩ	
		SPD09P06PL G* $R_{DS(on)}$ =250.0 mΩ						
		IPD25DP06LM $R_{DS(on)}$ = 250 mΩ						
		IPD25DP06NM $R_{DS(on)}$ = 250 mΩ						
		SPD08P06P G* $R_{DS(on)}$ =300.0 mΩ						
		IPD40DP06NM $R_{DS(on)}$ = 400 mΩ						
	-100	SPD15P10PL G* $R_{DS(on)}$ =200.0 mΩ		SPP15P10PL H* $R_{DS(on)}$ =200.0 mΩ				
		SPD15P10P G* $R_{DS(on)}$ =240.0 mΩ						
		SPD04P10PL G* $R_{DS(on)}$ =850.0 mΩ						
		SPD04P10P G* $R_{DS(on)}$ =1000.0 mΩ						

* Products are qualified to Automotive AEC Q101
** $R_{DS(on)}$ specified at 4.5 V
1) 5-leg

For more details on the product, click on the part number or contact our product support.

Small signal/small power N-channel

Voltage [V]		SOT-223	TSOP-6	SOT-89	SC59	SOT-23	SOT-323	SOT-363
N-channel	20				BSR802N 23 mΩ, 3.7 A, ULL	IRLML6244* [1] 21 mΩ, 6.3 A, LL		
			BSL202SN 22 mΩ, 7.5 A, SLL		BSR202N 21 mΩ, 3.8 A, SLL	IRLML2502* [1] 45 mΩ, 4.2 A, SLL		
			IRLMS2002* [1] 30 mΩ, 6.5 A, SLL			IRLML6246* [1] 46 mΩ, 4.1 A, LL		
						BSS205N 50 mΩ, 2.5 A, SLL		BSD214SN 140 mΩ, 1.5 A, SLL
						BSS806NE 57 mΩ, 2.3 A, ULL, ESD		
						BSS806N 57 mΩ, 2.3 A, ULL	BSS214NW 140 mΩ, 1.5 A, SLL	BSD235N 350 mΩ, 0.95 A, SLL, dual
			IRLMS1902* [1] 100 mΩ, 3.2 A, SLL			BSS214N 140 mΩ, 1.5 A, SLL	BSS816NW 160 mΩ, 1.4 A, ULL	BSD840N 400 mΩ, 0.88 A, ULL, dual
						IRLML2402* [1] 250 mΩ, 1.2 A, SLL		
	25					IRFML8244* 24 mΩ, 5.8 A, NL		
	30		IRLTS6342* [1] 17.5 mΩ, 8.3 A, LL			IRLML0030* 27 mΩ, 5.3 A, LL		BSD316SN 160 mΩ, 1.4A, LL
			IRFTS8342* 19 mΩ. 8.2 A, NL			IRLML6344* [1] 29 mΩ, 5.0 A, LL		
						BSS306N 57 mΩ, 2.3 A, LL		
						IRLML6346* [1] 63 mΩ, 3.4 A, LL		
			IRLMS1503* 100 mΩ, 3.2 A, LL			IRLML2030* 100 mΩ, 1.4 A, LL		
						BSS316N 160 mΩ, 1.4 A, LL		
						IRLML2803* 250 mΩ, 1.2 A, LL		
	40					IRLML0040TRPBF* 56 mΩ,3.6 A, LL		
	55	IRFL024Z* 57.5 mΩ, 5.1 A				BSS670S2L 650 mΩ, 0.54 A, LL		
	60	BSP318S 90 mΩ, 2.6 A, LL	BSL606SN 60 mΩ, 4.5 A, LL	BSS606N 60 mΩ, 3.2 A, LL		IRLML0060* 92 mΩ, 2.7 A, LL	BSS138W 3.5 Ω, 0.28 A, LL	2N7002DW 3 Ω, 0.3 A, LL, dual
		BSP320S 120 mΩ, 2.9 A, NL				IRLML2060* 480 mΩ, 1.2 A, LL	SN7002W 5 Ω, 0.23 A, LL	
		BSP295 300 mΩ, 1.8 A, LL				BSS138N 3.5 Ω, 0.23 A, LL		
						BSS138I * 3.5 Ω, 0.23 A, LL		
						BSS7728N 5 Ω, 0.2 A, LL		
						SN7002N 5 Ω, 0.2 A, LL		
						SN7002I* 5 Ω, 0.2 A, LL		
						2N7002* 3 Ω, 0.3 A, LL		
						BSS159N[2] 8 Ω, 0.13 A, depl.		
	100	BSP372N 230 mΩ, 1.8 A, LL				IRLML0100* 220 mΩ, 1.6 A, LL		
		BSP373N 240 mΩ, 1.8 A, NL				BSS119N 6 Ω, 0.19 A, LL $V_{GS(th)}$ 1.8 V to 2.3 V		
		BSP296N 600 mΩ, 1.2 A, LL				BSS123N 6 Ω, 0.19 A, LL $V_{GS(th)}$ 0.8 V to 1.8 V		
						BSS123I* 6 Ω, 0.19 A, LL		
						BSS169[2] 12 Ω, 0.09 A, depl.		
						BSS169I* [2] 12 Ω, 0.09 A, depl.		
	150		IRF5802* 1.2 mΩ, 0.9 A, NL					
	200	BSP297 1.8 Ω, 0.66 A, LL	IRF5801* 2.2 mΩ, 0.6 A, NL					
		BSP149 [2] 3.5 Ω,0.14 A, depl.						
	240	BSP88 6 Ω, 0.35 A, 2.8 V rated		BSS87 6 Ω, 0.26 A, LL		BSS131 14 Ω, 0.1 A, LL		
		BSP89 6 Ω, 0.35 A, LL						
		BSP129[2] 6 Ω, 0.05 A, depl.						
	250					BSS139[2] 30 Ω, 0.03 A, depl.		
						BSS139I*[2] 30 Ω, 0.03A, depl		
	400	BSP324 25 Ω, 0.17 A, LL						
	600	BSP125 45 Ω, 0.12 A, LL		BSS225 45 Ω, 0.09 A, LL		BSS127 500 Ω, 0.023 A, LL		
		BSP135[2] 60 Ω, 0.02 A, depl.				BSS127I* 500 Ω, 0.023A, LL		
		BSP135I *[2] 60 Ω, 0.02 A, depl.				BSS126[2] 700 Ω, 0.007 A, depl.		
						BSS126I *[2] 700 Ω, 0.021A, depl.		

* Not qualified to Automotive AEC Q101 (all other products without the *-marking are Automotive AEC Q101 qualified)
** For more information on the product, contact our product support
1) $R_{DS(on)}$ specified at 4.5 V
2) $R_{DS(on)}$ specified at 0 V

For more details on the product, click on the part number or contact our product support.

Small signal/small power P-channel

	Voltage [V]	SOT-223	TSOP-6	SOT-89	SC59	SOT-23	SOT-323	SOT-363
P-channel MOSFETs	-250	BSP317P 4 Ω, -0.43 A, LL		BSS192P 12 Ω, -0.19 A, LL	BSR92P 11 Ω, -0.14 A, LL			
		BSP92P 12 Ω, -0.26 A, LL						
	-100	BSP321P 900 mΩ, -0.98 A, NL						
		BSP322P 800 mΩ, -1.0 A, LL						
		BSP316P 1.8 Ω, -0.68 A, LL			BSR316P 1.8 Ω, -0.36 A, LL			
	-60	ISP650P06NM 65 mΩ, -3.7 A, NL				ISS17EP06LM 1.7Ω, -0.3 A, LL		
		ISP12DP06NM 125 mΩ, -2.8 A, NL				BSS83P 2 Ω, -0.33 A, LL	BSS84PW 8 Ω, -0.15 A, LL	
		ISP13DP06NMS 125 mΩ, -2.8 A, NL				ISS55EP06LM 5.5 Ω, -0.18 A, NL		
		BSP613P 130 mΩ, 2.9 A, NL						
		ISP25DP06LM 250 mΩ, -1.9 A, LL				BSS84P 8 Ω, -0.17 A, LL		
		ISP25DP06NM 250 mΩ, -1.9 A, NL						
		ISP25DP06LMS 250 mΩ, -1.9 A, LL			BSR315P 800 mΩ, -0.62 A, LL			
		ISP26DP06NMS 260 mΩ, -1.9 A, NL						
		BSP171P 300 mΩ, -1.9 A, LL						
		BSP170P 300 mΩ, -1.9 A, NL						
		ISP75DP06LM 750 mΩ, -1.1 A, LL						
		BSP315P 800 mΩ, -1.17 A, LL						
	-40		IRF5803TRPBF* 112 mΩ, -3.4 A, LL					
	-30		IRFTS9342TRPBF* 40 mΩ, -5.8 A, LL			IRLML9301TRPBF* 64 mΩ, -3.6 A, LL		BSD314SPE 140 mΩ, -1.5 A, LL, ESD
			BSL307SP 43 mΩ, -5.5 A, LL			BSS308PE 80 mΩ, -2.1 A, LL, ESD		
			BSL308PE 80 mΩ, -2.1 A, LL, dual, ESD			IRLML5203TRPBF* 98 mΩ, -3.0 A, LL		
						BSS314PE 140 mΩ, -1.5 A, LL, ESD		
						BSS315P 150 mΩ, -1.5 A, LL		
						IRLML9303TRPBF* 165 mΩ, -2.3 A, LL		
						IRLML5103TRPBF* 600 mΩ, -0.76 A, LL		
	-20		IRLTS2242* [1] 32 mΩ, -6.9 A, SLL					
			BSL207SP [1] 41 mΩ, -6 A, SLL			IRLML2244* [1] 54 mΩ, 4.3 A, LL		
			IRLMS6802* [1] 50 mΩ, -5.6 A, SLL			IRLML6402* [1] 65 mΩ, -3.7 A, SLL	BSS209PW [1] 550 mΩ, -0.58 A, SLL	BSV236SP [1] 175 mΩ, -1.5 A, SLL
			BSL211SP [1] 67 mΩ, -4.7 A, SLL			IRLML2246* [1] 135 mΩ, 2.6 A, LL	BSS223PW [1] 1.2 Ω, -0.39 A, SLL	BSD223P [1] 1.2 Ω, -0.39 A, SLL, dual
			IRLMS6702* [1] 200 mΩ, -2.4 A, SLL			BSS215P [1] 150 mΩ, -1.5 A, SLL		
						IRLML6302* [1] 600 mΩ, -0.78 A, SLL		
	-12					IRLML6401* [1] 50 mΩ, -4.3 A, SLL		

Small signal/small power complementary

	Voltage [V]	TSOP-6	SOT-363
Complementary	-20/20	BSL215C N: 140 mΩ, 1.5 A, SLL P: 150 mΩ, 1.5 A, SLL	BSD235C N: 350 mΩ, 0.95 A, SLL P: 1.2 Ω, 0.53 A, SLL
	-30/30	BSL308C N: 57 mΩ, 2.3 A, LL P: 80 mΩ, -2.0 A, LL	
		BSL316C N: 160 mΩ, 1.4 A, LL P: 150 mΩ, -1.5 A, LL	

* Not qualified to Automotive AEC Q101 (all other products without the *-marking are Automotive AEC Q101 qualified)
1) $R_{DS(on)}$ 4.5 V rated

For more details on the product, click on the part number or contact our product support.

Nomenclature

OptiMOS™

BSC 014 N 03 L [S] [X] [E] [G]

Package type
BSB = DirectFET™ (M Can)
BSC = SuperSO8
BSF = DirectFET™ (S Can)
BSK = PQFN 2 x 2
BSO = SO-8
BSZ = PQFN 3.3 x 3.3
IPA = FullPAK
SPB/IPB = D^2PAK
IPC = Chip product
SPD/IPD = DPAK
IPI = I^2PAK
SPP/IPP = TO-220
IPS = IPAK Short Leads
IPT = TO-Leadless

$R_{DS(on)}$ [mΩ]
Divide by 10 to get $R_{DS(on)}$ value e.g. 014 = 1.4 mΩ

However, if the sixth character is a C, the fourth and the fifth character indicate the $R_{DS(on)}$ e.g. 12C = 12 mΩ
For chip products chip area in mm^2 multiplied by 10

N = N-channel
P = P-channel
C = Complementary

Breakdown voltage [V]
Multiply by 10 to get voltage class e.g. 03 = 30 V
E = Extended, +5 V, e.g. E2 = 25 V

RoHS compliant

Features
F = Fast switching
R = Integrated gate resistor
E = ESD protection
A = Qualified according to AEC Q101

3 = Technology generation
I = Monolithically integrated Schottky-like diode
FD = Fast diode
LF = Linear mode capability

Package options
SO-8/SuperSO8/PQFN 3.3 x 3.3/PQFN 2 x 2
S = Single chip
D = Dual chip

DirectFET™
X = MX footprint
N = MN footprint
Z = MZ footprint
Q = SQ footprint
T = ST footprint
H = SH footprint
J = SJ footprint

Level

		to be used from V_{GS}
N = Normal level	(NL)	10.0
M = Logic level 5 V opt.	(LL)	4.5
L = Logic level	(ELL)	4.5
K = Super logic level	(SLL)	2.5
J = Ultra logic level	(ULL)	1.8

OptiMOS™ 30 V

BSC 0901 N X [I]

Package type

Consecutive number
without any correlation to product specification

Channels
N = N-channel
P = P-channel

D = Dual
E = ESD
S = Single

I = Monolithically integrated Schottky-like diode

Small signal

"X" indicates the package
D = SOT-363
P = SOT-223
R = SC59
S = SOT-89, SOT-23, SOT-323
L = TSOP-6

3 digits product identifier
meaning dependent on product generation

Only present in following case
S = Single (only for packages which are also used for multichip products)

Additional features
E = ESD protected MOSFET

Only present in following case
W= to distinguish SOT-323 from SOT-23

Polarity
N = N-channel
P = P-channel
C = Complementary (N-ch + P-ch)

StrongIRFET™ (from May 2015 to 2019)

3 sequential digits
3 digits issued sequentially

Package
1 or 2 letters
B = TO-220
BA = Super220
C = Bare die or wafer
DL = DirectFET™ 1.5 Large Can
DM = DirectFET™ 1.5 Medium Can
Can DS = DirectFET™ 1.5 Small Can
Can FF = TO-220 FullPAK
H = PQFN 5 x 6
HB = Power Block 5 x 6
HM = PQFN 3.0 x 3.0 or 3.3 x 3.3
HS = PQFN 2 x 2
I = TO-220 FullPAK
K = SO-8
L = SOT-223
ML = SOT-23
P = TO-247
PS = Super247
R = DPAK
S = D^2PAK
SL = TO-262
SA = D2 7-pin with pin 2 void
SN = D2 7-pin with pins void
SC = D2 7-pin with pin 4 void
T = TollFET
TS = TSOP-6
U = IPAK

Drive voltage
F = 4.5 V_{GS} capable for BV ≤ 30 V
L = 2.5 V_{GS} capable for BV ≤ 30 V, 4.5 V_{GS} capable for BV ≥ 40 V

2 to 3 digit voltage
For example:
25 = 25 V
135 = 135 V

New nomenclature for OptiMOS™ and StrongIRFET™ MOSFETs (2019 onward)

I | SC | 010 | N | 25 | L | I

Infineon

Package type
SC = SuperSO8
SD = SOT-363
SL = TSOP-6
SK = PQFN 2 x 2
SO = SO-8
SP = SOT-223
SQ = CE2
SR = SC59
SS = SOT-89, SOT-23, SOT-323
ST = sTOLL
SZ = PQFN 3.3 x 3.3
PA = TO-220 FullPAK
PB = D^2PAK
PC = Chip Product
PD = DPAK
IPF = D^2PAK-7-pin
PI = I^2PAK
PP = TO-220
PS = IPAK Short Leads
PT = TO-Leadless
PW = TO-247
QA = PQFN 4.5 x 4
QB = PQFN 3 x 2
QC = PQFN 3 x 5
QD = PQFN 5 x 6 Source-Down
QE = PQFN 3.3 x 3.3 Source-Down
WS = DirectFET™ (S)
WM = DirectFET™ (M)
WL = DirectFET™ (L)
IQE = Source down

$R_{DS(on)}$ [mΩ]
Divide by 10 to get $R_{DS(on)}$ value
e.g. 012 = 1.2 mΩ

However, if the sixth character is D or E the fourth and the fifth characters indicate the $R_{DS(on)}$ e.g.
12D = 120 mΩ
12E = 1200 mΩ
For chip products chip area in mm^2 multiplied by 10

Version
N = N-channel
P = P-channel
C = Complementary
G = GaN

Features
D = Dual
H = Half-bridge

M|F = Product brand – family
(M = OptiMOS™, F = StrongIRFET™)
3 = Marketing generation with branding strategy
CG = Center gate
E = ESD protection
F = Fast switching
FD = Fast diode
SC = Super cool
I = Monolithically integrated Schottky like diode
LF = Linear mode
R = Integrated gate resistor

Last letter – requirement category:
A = Qualified according to AECQ 101
S = Standard
None = Industrial

Level to be used for V_{GS}

N = Normal level	(NL)	10.0 V
L = Logic level	(LL)	4.5 V
M = Logic level 5 V opt.	(ELL)	4.5 V
K = Super logic level	(SLL)	2.5 V
J = Ultra logic level	(ULL)	1.8 V

Breakdown voltage [V]
Divide by 10
e.g. E2 = 25 V
10 = 100 V
25 = 250 V

Infineon support for low voltage MOSFETs

Useful links and helpful information

Further information, data sheets and documents

infineon.com/smallsignal
infineon.com/pchannel
infineon.com/depletion
infineon.com/complementary

Evaluation boards and simulation models

infineon.com/to-leadless-evaluationboard
infineon.com/powermosfet-simulationmodels

Die support

infineon.com/baredie

For more information regarding StrongIRFET™ and OptiMOS™ power MOSFET bare die products, please contact the Infineon Service Center or your local Sales counterpart.

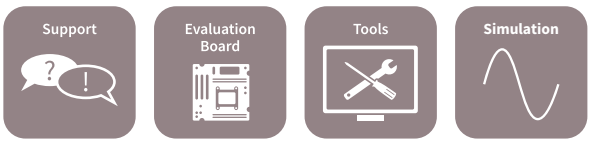

500-950 V MOSFETs

- CoolMOS™ SJ MOSFETs
- 950 V CoolMOS™ P7 SJ MOSFETs
- 800 V CoolMOS™ P7 SJ MOSFETs
- 700 V CoolMOS™ P7 SJ MOSFETs
- 600 V CoolMOS™ P7 SJ MOSFETs
- 600 V CoolMOS™ PFD7 SJ MOSFETs
- 600 V and 650 V CoolMOS™ C7 and C7 Gold (G7) SJ MOSFETs
- 600 V CoolMOS™ S7 SJ MOSFETs
- 600 V CoolMOS™ PFD7 SJ MOSFETs
- 650 V CoolMOS™ CFD7 SJ MOSFETs
- CoolMOS™ CE SJ MOSFETs
- CoolMOS™ SJ MOSFETs for automotive
- CoolMOS™ SJ MOSFET package innovations
- 500-950 V MOSFETs product portfolio
- 500-950 V MOSFETs nomenclature

CoolMOS™ SJ MOSFETs

Trusted leader in high voltage MOSFETs

The revolutionary CoolMOS™ power MOSFET sets new standards in the field of energy efficiency. Our CoolMOS™ products offer a significant reduction of conduction, switching and driving losses, and enable high power density as well as efficiency for superior power conversion systems.

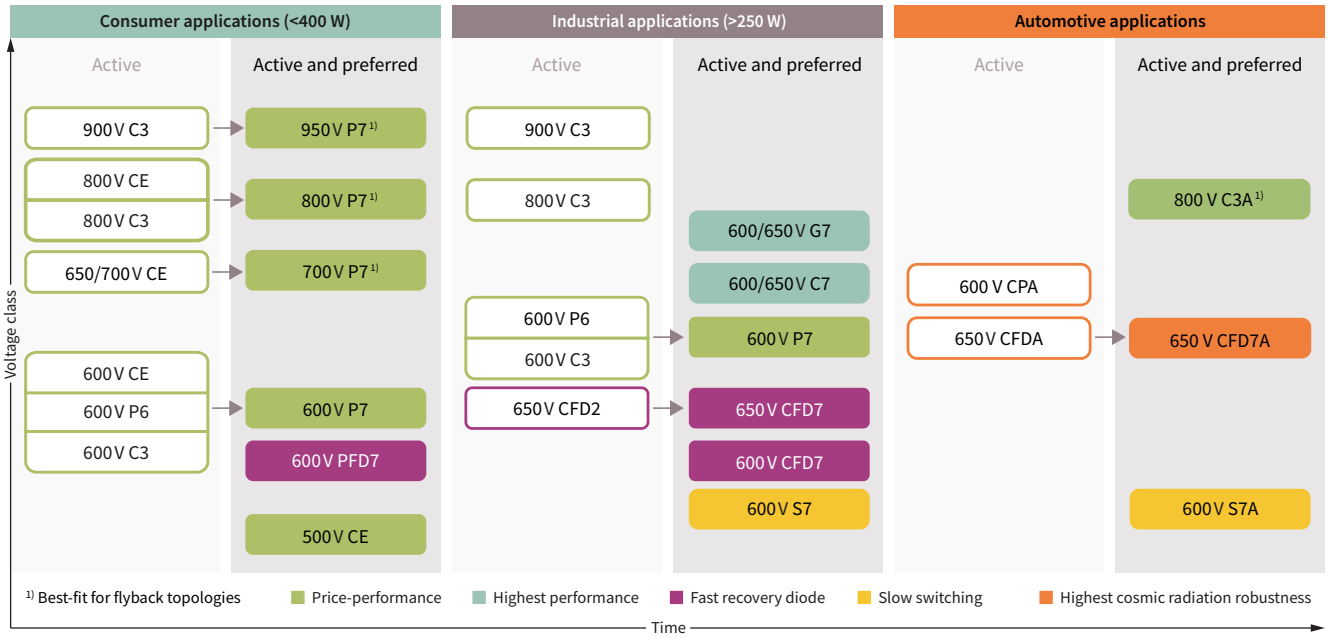

CoolMOS™ low power package innovations
Click to learn more

CoolMOS™ high power package innovations
Click to learn more

High voltage superjunction MOSFETs address consumer applications, such as home appliance drives, smartphone/tablet chargers, notebook adapters, LED lighting, PC power, as well as audio and TV power supplies. Customers are increasingly replacing standard MOSFETs with superjunction MOSFETs to benefit from higher efficiency and lower power consumption for end users. CoolMOS™ P7 sets a new benchmark by offering high performance and competitive price all at once. CoolMOS™ PFD7 as brand new series is a state-of-the-art solution for high density chargers/adapters as well as home appliance drives (e.g., refrigerator compressors).

Also for industrial applications such as server, telecom, PC power, solar, UPS, EV-charging and others, Infineon's latest CoolMOS™ 7 superjunction MOSFETs with C7, G7, CFD7 and P7 product families offer what you need - from highest efficiency to best price performance. Complementary to the silicon CoolMOS™ portfolio, Infineon offers a broad wide bandgap (WBG) portfolio of CoolGaN™ e-mode HEMTs and CoolSiC™ MOSFETs to further optimize efficiency and system cost (see Wide bandgap semiconductors).

Infineon's industrial- and consumer-qualified CoolMOS™ superjunction MOSFET offering is complemented by the automotive qualified series 600 V CPA, 650 V CFDA, 800 V C3A and our latest 650 V CFD7A and 600 V S7A. Gain your momentum in the rapidly growing xEV market with our excellent performing automotive series addressing on-board charger, DC-DC converter, active pre-charge and discharge function, insulation monitor, HV eFuse and HV eDisconnect with proven outstanding quality standards that go well beyond AEC Q101.

950 V CoolMOS™ P7 SJ MOSFETs

Perfect fit for PFC and flyback topologies

Designed to meet the growing consumer needs in the high voltage MOSFETs arena, the latest 950 V CoolMOS™ P7 technology focuses on the low-power SMPS market. The P7 family addresses applications ranging from lighting, smart meter, mobile phone charger, notebook adapter, to AUX power supply and industrial SMPS. Offering 50 V more blocking voltage than its predecessor 900 V CoolMOS™ C3, the 950 V CoolMOS™ P7 series delivers outstanding performance in terms of efficiency, thermal behavior, and ease of use. As all other P7 family members, the 950 V CoolMOS™ P7 series comes with an integrated Zener diode ESD protection. The integrated diode considerably improves ESD robustness, thus reducing ESD-related yield loss and reaching exceptional ease-of-use levels. CoolMOS™ P7 is developed with a best-in-class threshold voltage ($V_{GS(th)}$) of 3 V and a narrow tolerance of only ± 0.5 V, which makes it easy to drive and design-in.

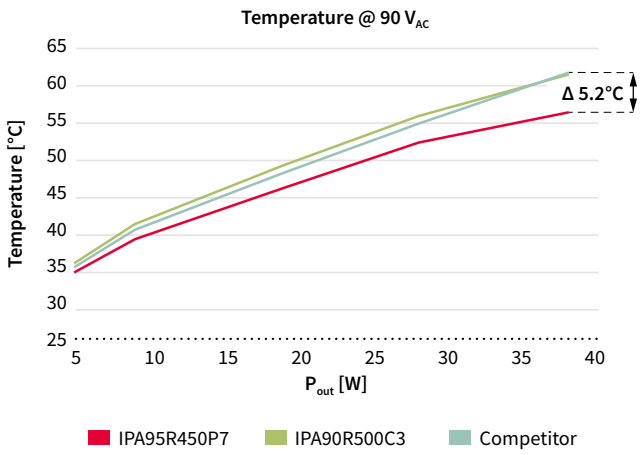

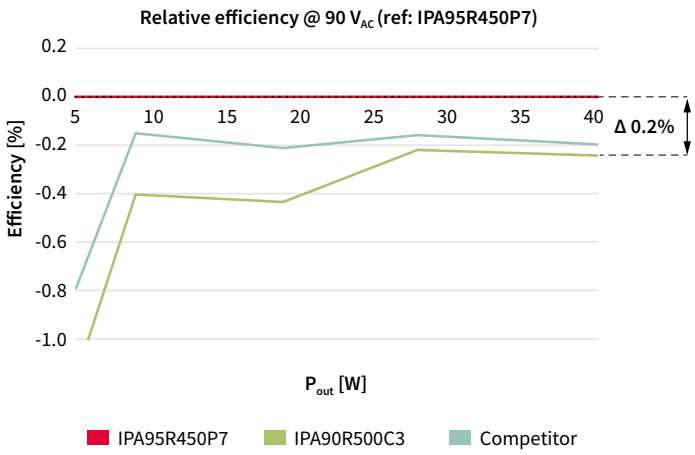

Compared to competition, the 950 V CoolMOS™ P7 delivers best-in-class efficiency and thermal performance. Plug-and-play at 90 V_{AC} in a 40 W adapter reference design, featuring the snubberless concept, demonstrates excellent efficiency gains of up to 0.2 % and lower MOSFET temperature of up to 5.2°C compared to similar competitor technology. With over 20 years of experience in superjunction technology, Infineon introduces 950 V CoolMOS™ P7 with best-in-class DPAK on-resistance ($R_{DS(on)}$). This SMD device comes with the $R_{DS(on)}$ of 450 mΩ - more than 60% lower $R_{DS(on)}$ compared to the nearest competitor. Such low $R_{DS(on)}$ value enables higher density designs while decreasing BOM and assembly cost.

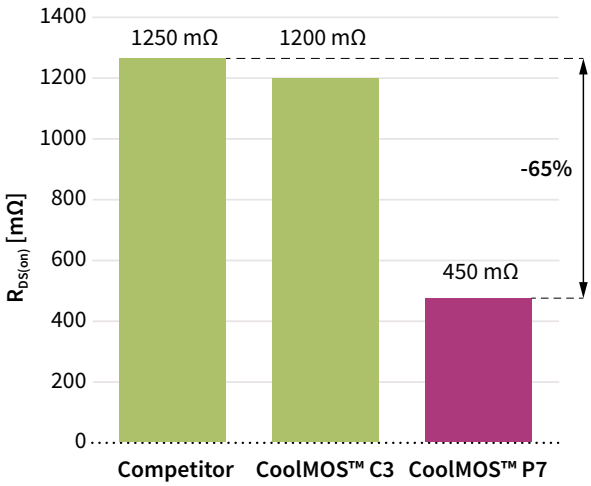

Best-in-class DPAK $R_{DS(on)}$

Customer benefits:

- Possible change from leaded to SMD packages
- High power density
- Lower BOM cost
- Lower production cost

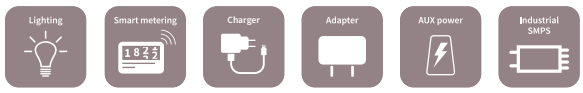

800 V CoolMOS™ P7 SJ MOSFETs

A benchmark in efficiency and thermal performance

With the 800 V CoolMOS™ P7 series, Infineon sets a benchmark in 800 V superjunction technologies and combines best-in-class performance with the remarkable ease of use. This product family is a perfect fit for flyback-based consumer and industrial SMPS applications. In addition, it is also suitable for PFC stages within consumer, as well as solar applications, fully covering the market needs in terms of its price/performance ratio.

The technology offers fully optimized key parameters to deliver best-in-class efficiency as well as thermal performance. As demonstrated on an 80 W LED driver, bought on the market, the >45 percent reduction in switching losses (E_{oss}) and output capacitance (C_{oss}) as well as the significant improvement in input capacitance (C_{iss}) and gate charge (Q_G), compared to competitor technologies, lead to 0.5 percent higher efficiency at light load which helps to reduce standby power in the end application. At full load, the observed improvement is up to 0.3 percent higher efficiency and 6°C lower device temperature.

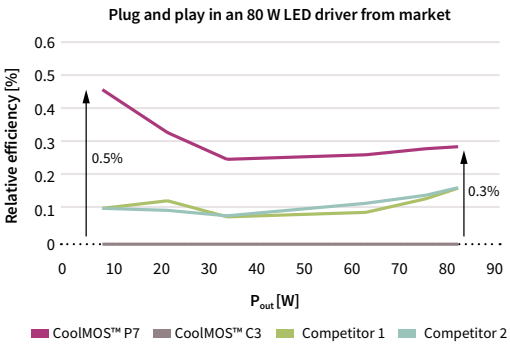

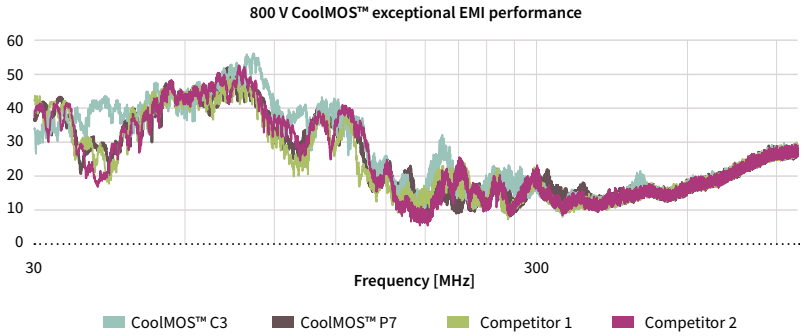

EMI is a system level topic, and the optimization needs to be done on the system level only. Nevertheless, a pure plug-and-play measurement on Infineon's 45 W adapter reveals that 800 V CoolMOS™ P7 shows similar EMI performance to Infineon's previous technologies as well as to competitors' technologies.

Compared to competition, the 800 V CoolMOS™ P7 technology allows to integrate much lower $R_{DS(on)}$ values into small packages, such as a DPAK. This finally enables high power density designs at highly competitive price levels.

Overview of lowest DPAK $R_{DS(on)}$ for 800 V superjunction MOSFET

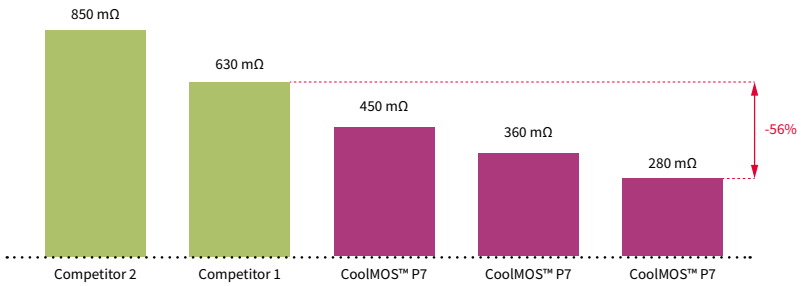

CoolMOS™ P7 sets a new benchmark in best-in-class DPAK $R_{DS(on)}$

Customer benefits:

- High power density
- Lower BOM cost
- Lower production cost

The complete P7 platform has been developed with an integrated Zener diode that is used as an electrostatic discharge (ESD) protection mechanism, which increases the overall device ruggedness up to human body model (HBM) class 2 level.

700 V CoolMOS™ P7 SJ MOSFETs

Our solution for flyback topologies

The 700 V CoolMOS™ P7 family has been developed to serve today's and, especially, tomorrow's trends in flyback topologies. The family products address the low power SMPS market, mainly focusing on mobile phone chargers and notebook adapters, but are also suitable for power supplies, used within lighting applications, home entertainment (TV, game consoles or audio), and auxiliary power supplies. 700 V CoolMOS™ P7 achieves outstanding efficiency gains of up to 4 percent and a decrease in device temperature of up to 16 K compared to the competition. In contrast with the previous 650 V CoolMOS™ C6 technology, 700 V CoolMOS™ P7 offers 2.4 percent gain in efficiency and 12 K lower device temperature, measured at a flyback-based charger application, operated at 140 kHz switching speed.

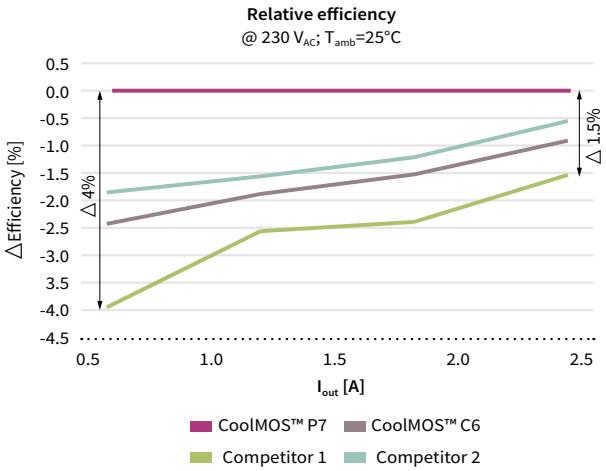

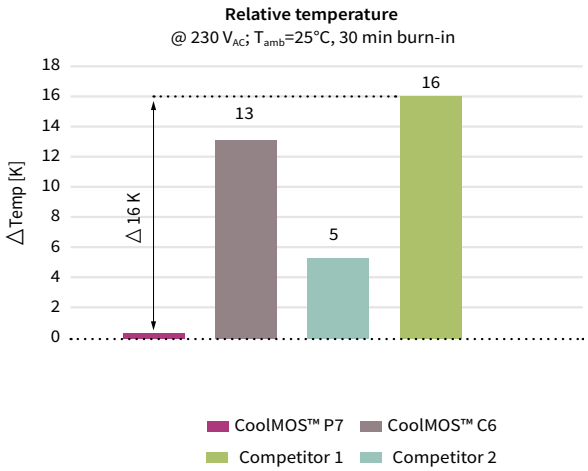

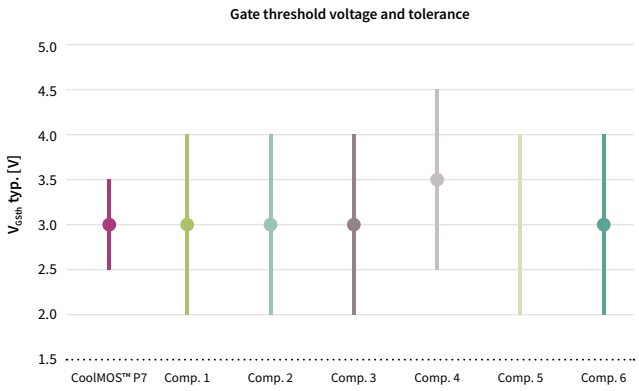

Keeping the ease of use in mind, Infineon has developed the technology with a low threshold voltage ($V_{GS(th)}$) of 3 V and a very narrow tolerance of ±0.5 V. This makes the CoolMOS™ P7 easy to design-in and enables the usage of lower gate source voltage, which facilitates its driving and leads to lower idle losses. To increase the ESD ruggedness up to HBM class 2 level, 700 V CoolMOS™ P7 has an integrated Zener diode. This helps to support increased assembly yield, leads to reduction of production related failures and, finally, manufacturing cost savings on customer side.

Features and benefits

Key features	Key benefits
Highly performant technology › Low switching losses (E_{oss}) › Highly efficient › Excellent thermal behavior	› Cost-competitive technology
› Allowing high speed switching	› Further efficiency gain at higher switching speed
› Integrated protection Zener diode	› Supporting less magnetic size with lower BOM costs
› Optimized $V_{GS(th)}$ of 3 V with very narrow tolerance of ±0.5 V	› High ESD ruggedness up to HBM class 2 level
› Finely graduated portfolio	› Easy to drive and design-in
	› Enabler for smaller form factors and high power density designs
	› Excellent choice in selecting the best fitting product

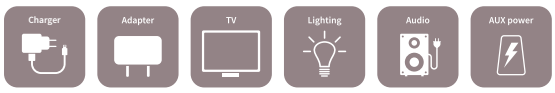

600 V CoolMOS™ P7 SJ MOSFETs

Perfect combination between high efficiency and ease of use

The 600 V CoolMOS™ P7 is a general purpose series, targeting a broad variety of applications, ranging from low power SMPS up to the highest power levels. In the low power arena, it is the successor of the 600 V CoolMOS™ CE, and for high power SPMS applications, it is the replacement for the 600 V CoolMOS™ P6, which makes it the perfect choice for applications such as chargers, adapters, lighting, TV and PC power supplies, solar, small light electric vehicles, server and telecom power supplies, and electric vehicle (EV) charging.

The 600 V CoolMOS™ P7 is Infineon's most well-balanced CoolMOS™ technology in terms of combining ease of use and excellent efficiency performance. Compared to its predecessors, it offers higher efficiency and improved power density due to the significantly reduced gate charge (Q_G) and switching losses (EOSS) levels, as well as optimized on-state resistance ($R_{DS(on)}$). The carefully selected integrated gate resistors enable very low ringing tendency and, thanks to its outstanding robustness of body diode against hard commutation, it is suitable for hard as well as soft switching topologies, such as LLC. In addition, an excellent ESD capability helps to improve the quality in manufacturing. The 600 V CoolMOS™ P7 family offers a wide range of on-resistance ($R_{DS(on)}$)/package combinations, including THD, as well as SMD devices, at an $R_{DS(on)}$ granularity from 24 to 600 mΩ and comes along with the most competitive price/performance ratio of all 600 V CoolMOS™ offerings.

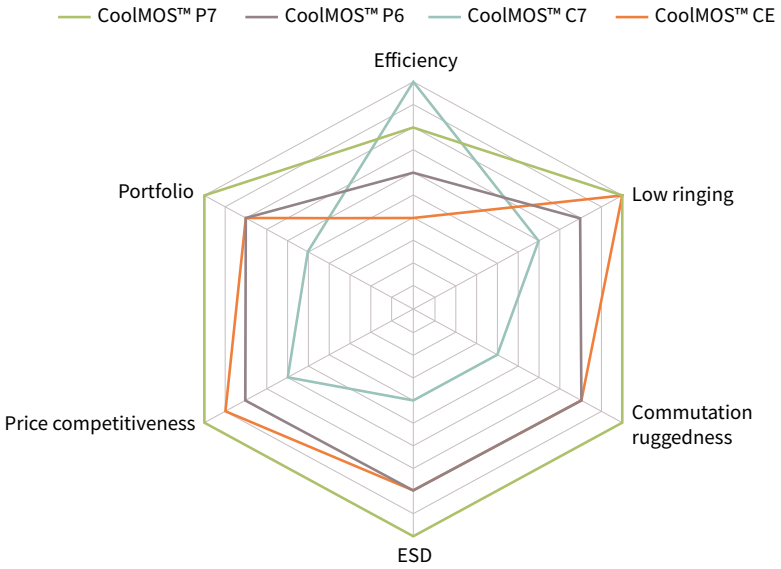

Features and benefits

Key features	Key benefits
› Suitable for hard and soft switching (PFC and LLC) due to an outstanding commutation ruggedness	› Ease of use and fast design-in through low ringing tendency and usage across PFC and PWM stages
› Optimized balance between efficiency and ease of use	› Improved efficiency and simplified thermal management due to low switching and conduction losses
› Significant reduction of switching and conduction losses leading to low MOSFET temperature	› Higher manufacturing quality due to >2 kV ESD protection
› Excellent ESD robustness >2 kV (HBM) for all products	
› Better $R_{DS(on)}$/package products compared to competition	› Increased power density solutions enabled by using products with smaller footprint
› Large portfolio with granular $R_{DS(on)}$ selection qualified for a variety of industrial and consumer applications	› Suitable for a wide variety of applications and power ranges

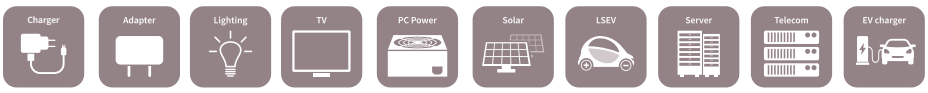

600 V CoolMOS™ PFD7 SJ MOSFETs

The next level for ultrahigh power density designs and energy-efficient home appliance drives

The 600 V CoolMOS™ PFD7 MOSFET series sets a new benchmark in 600 V superjunction (SJ) technologies, shaped by Infineon's experience of more than 20 years in pioneering in superjunction technology innovation. The series combines best-in-class performance with state-of-the-art ease of use and features an integrated fast body diode ensuring a robust device and in turn reduced BOM for the customer. This product family offers up to 1.17 percent efficiency increase compared to the CoolMOS™ P7 technologies, which leads to a power density increase of 1.8 W/in³. CoolMOS™ PFD7 pushes the SJ MOSFET technology to new limits leading to outstanding improvement of lower conduction and charge/discharge losses as well as a reduced turn-off and gate-driving losses.

A broad range of $R_{DS(on)}$ values in combination with a variety of packages helps in selecting the right part to optimize designs. Furthermore, an integrated ESD protection of up to 2 kV eliminates ESD-related yield loss. At the same time, especially our industry-leading SMD package offering contributes to bill-of-material and PCB space savings and simplifies manufacturing. This unique set of product features and their resulting benefits, position the CoolMOS™ PFD7 superjunction MOSFET family exceptionally well for ultrahigh density applications like chargers and adapters, USB power delivery but also for home appliance drives (e.g. refrigerator compressors) and specific lighting SMPS applications.

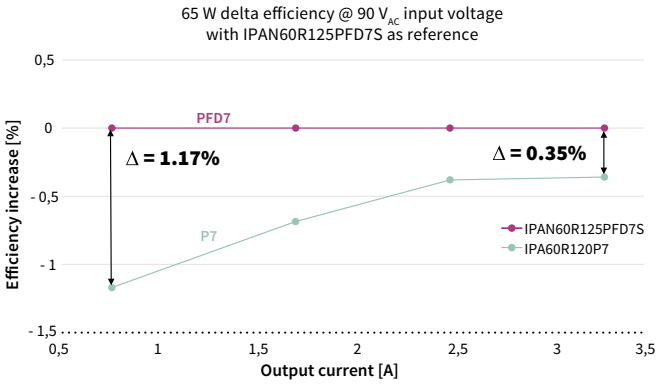

600 V CoolMOS™ PFD7 increases efficiency in light- and full-load conditions. This results in a power density increase of 1.8 W/in³ for ultrahigh power chargers and adapters.

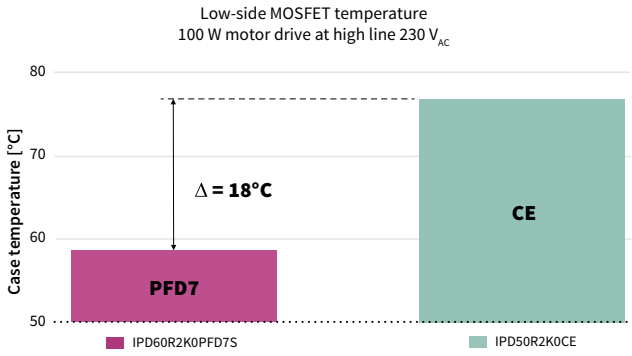

600 V CoolMOS™ PFD7 provides up to 2 percent higher efficiency at 100 W, which results in an 18°C thermal improvement. Its excellent commutation ruggedness makes it the perfect fit for low-power drives.

Features and benefits

Key features
› Very low FOM $R_{DS(on)}$ x E_{oss}
› Integrated robust fast body diode
› Ultra-low Q_{rr} and industry's fastest recovery time (T_{rr})
› Up to 2 kV ESD protection (HBM class 2)
› Wide range of $R_{DS(on)}$ values and broad package portfolio
› Excellent commutation ruggedness

Key benefits
› Minimized switching losses
› Power density improvement compared to latest CoolMOS™ charger technology
› Increased efficiency (especially at light-load operation) and improved thermal behavior compared to CoolMOS™ CE technology for home appliance motor drives
› BOM cost reduction and easy manufacturing
› Robustness and reliability
› Easy to select right parts for design fine-tuning

600 V and 650 V CoolMOS™ C7 and C7 Gold (G7) SJ MOSFETs

Infineon's superjunction MOSFET series for highest efficiency

The 600 V and 650 V CoolMOS™ C7 and C7 Gold (G7) superjunction MOSFET series are designed to achieve record level efficiency performance – they offer substantial efficiency benefits over the whole load range in hard switching applications compared to previous series and competition. This is achieved by minimizing switching losses via ultralow levels of switching losses (E_{OSS}) (approximately 50 percent reduction compared to the CoolMOS™ CP), reduced gate charge (Q_G) and a careful balance of other relevant product key parameters. The low E_{oss} and Q_G also enable operation at higher switching frequency and related size reduction of the circuit magnetics.

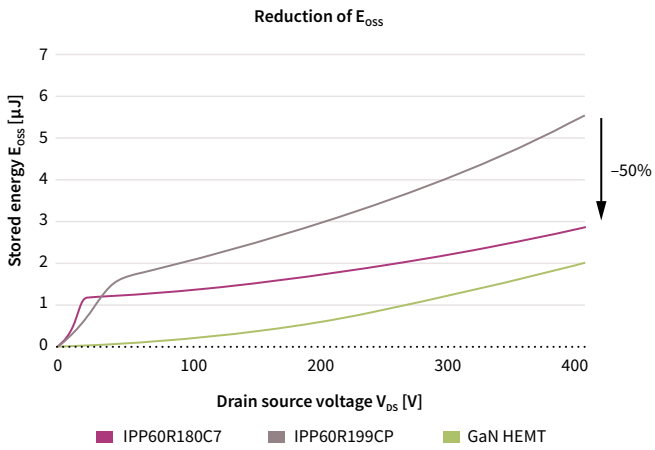

The outstanding figures of merit (FOM) and the best-in-class on-state resistance ($R_{DS(on)}$) offerings make the CoolMOS™ C7 and C7 Gold series key enablers for highest efficiency and power density. While the 650 V CoolMOS™ C7 and G7 (C7 Gold) superjunction MOSFETs are solely designed for hard switching applications such as PFC, the 600 V version is also well suited for high-end LLC stages due to its rugged body diode that withstands slew rates up to 20 V/ns. The product portfolio contains TO-247 4-pin, ThinPAK 8x8, TO-Leadless and top-side cooled Double DPAK (DDPAK) packages which come with additional Kelvin source contacts enabling further efficiency advantages over the classical 3-pin approach.

Features and benefits

Key features	Key benefits
› Reduced switching loss parameters such as Q_G and C_{oss}, enabling higher switching frequency	› Increased efficiency in hard switching topologies such as PFC and TTF
› 50 percent E_{os}s reduction compared to older CoolMOS™ CP	› Reduced size and cost of magnetic components by increased switching frequency (e.g. 65 -130 kHz)
› Suitable for hard switching topologies (650 V and 600 V)	› Increased power density by smaller packages for the same $R_{DS(on)}$
› Suitable for high-end resonant (600 V only) topologies	

PFC CCM 1200 W efficiency difference for 90 V_{AC} (PFC CCM, 1.150 W @ 65 kHz)

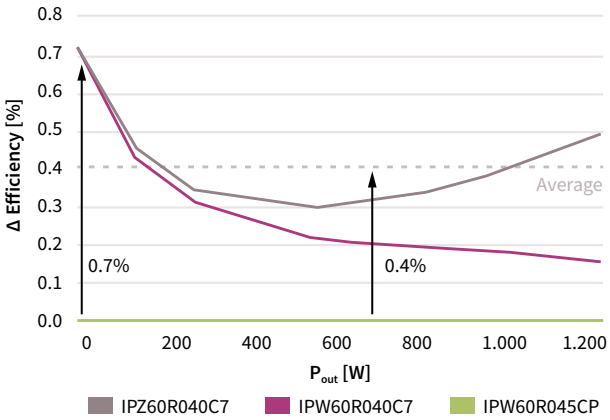

MOSFET losses [W]
IPW60R045CP vs. IPZ60R060C7, highline 2.5 kW

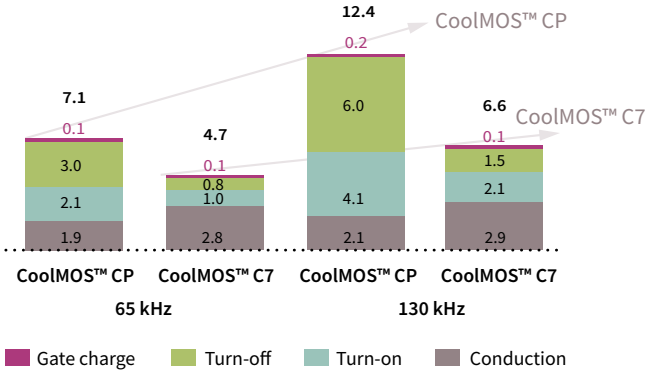

600 V CoolMOS™ S7 SJ MOSFETs

The best price/performance SJ MOSFET for low frequency switching applications

The 600 V CoolMOS™ S7 superjunction MOSFET is the perfect fit for applications where MOSFETs are switched at low frequency, such as active bridge rectification, inverter stages, in-rush relays, PLCs, power solid state relay and solid state circuit breakers. The new MOSFET design, not being focused on switching losses, allows the CoolMOS™ S7 to offer cost-optimized, distinctively low on-resistance ($R_{DS(on)}$) values, ideally suited for applications looking to minimize conduction losses at the best price.

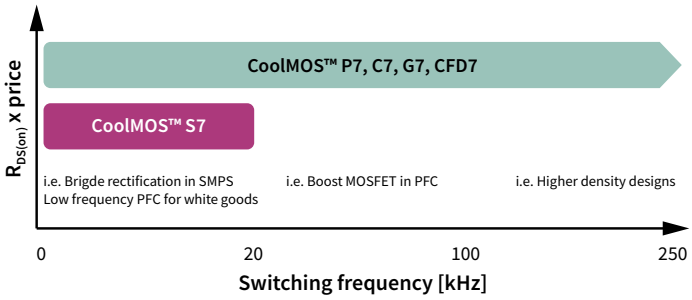

The CoolMOS™ S7 leads the way for power density, uniquely fitting a 22 mΩ $R_{DS(on)}$ chip into an innovative small TO-Leadless (TOLL) SMD package.

Use cases

Typically, CoolMOS™ S7 is used in active rectification bridges, where diodes are replaced or paralleled with MOSFETs, obtaining an increase in efficiency without the need for extensive system redesign. In this application, the TO-leadless (TOLL) package in low $R_{DS(on)}$ allows the most efficient and compact modular design based on daughter cards.
The CoolMOS™ S7 delivers also tremendous value to solid state relay (SSR) and solid state circuit breaker (SSCB) designs, by bringing the superjunction MOSFET advantages to a system level cost comparable to silicon alternatives.
In addition, any socket or topology switching at low frequency can greatly benefits from the leading low $R_{DS(on)}$ x price.

Features and benefits

Key features	Key benefits
› Best-in-class $R_{DS(on)}$ in SMD packages	› Minimizes conduction losses
› Optimized for conduction performance, reaching the lowest $R_{DS(on)}$ values	› An easy step into Titanium level SMPS
› High pulse current capability	› Modular, more compact and easier designs
› Improved thermal resistance	› Eliminates or reduces heat sink in solid state relays and circuit breakers
	› Lower TCO cost or BOM cost

Efficiency in 2400 W PFC at V_{in} = 230 V_{AC}
Difference between using or not using the active bridge rectification

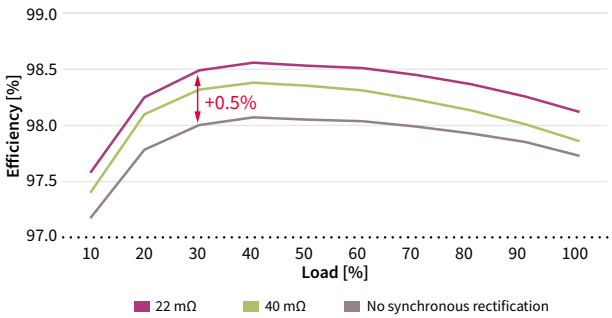

CoolMOS™ S7 brings more efficiency to power supplies when used in an active rectification bridge.

3 kW GaN based totem pole PFC efficiency calculation with and without synchronous rectification when V_{in} = 230 V_{AC}, V_{out} = 400 V, f_{sw} = 65 kHz

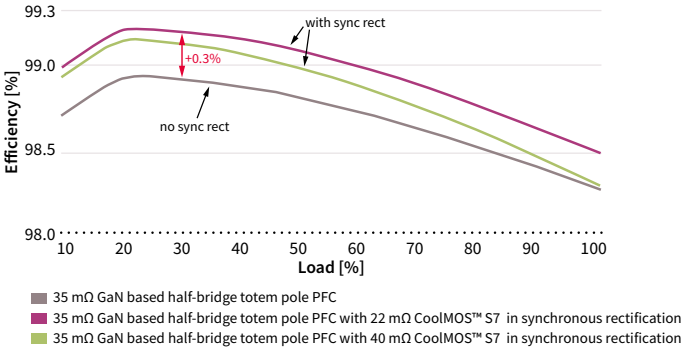

CoolMOS™ S7 is the perfect complement for CoolSiC™ MOSFETs and CoolGaN™ e-mode HEMTs in totem pole PFC topologies.

600 V CoolMOS™ CFD7 SJ MOSFETs

Infineon's solution for resonant switching high power applications

The 600 V CoolMOS™ CFD7 is one of Infineon's high voltage superjunction MOSFET series with an integrated fast body diode. It is the ideal choice for resonant topologies, such as LLC and ZVS PSFB, and targets the high SMPS market.

As a result of significantly reduced gate charge (Q_G), improved turn-off behavior, a reverse recovery charge (Q_{rr}) of up to 69 percent lower compared to the competition, as well as the lowest reverse recovery time (t_{rr}) in the market, it combines the highest efficiency and best-in-class reliability in soft switching applications, without sacrificing the easy implementation in the design-in process.

In addition, the 600 V CoolMOS™ CFD7 enables higher power density solutions by offering the best-in-class on-state resistance ($R_{DS(on)}$) package combinations in through-hole devices, as well as in surface mount devices. In ThinPAK 8x8 and TO-220 with CoolMOS™ CFD7, a $R_{DS(on)}$ of around 30 percent below the next best competitor offering can be achieved. All this together makes CoolMOS™ CFD7 the perfect fit for server and telecom applications, and it is also suitable for EV-charging stations.

Q_{rr} comparison of 170 mΩ CFD vs. 190 mΩ range competition*

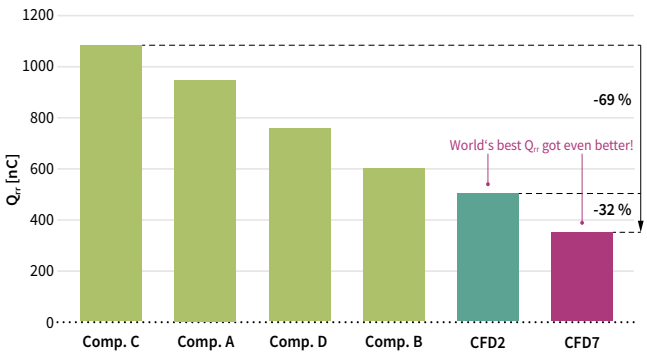

*Comparison based on datasheet values

Efficiency comparison of CFD7 vs. CFD2 and competition in 2 kW ZVS

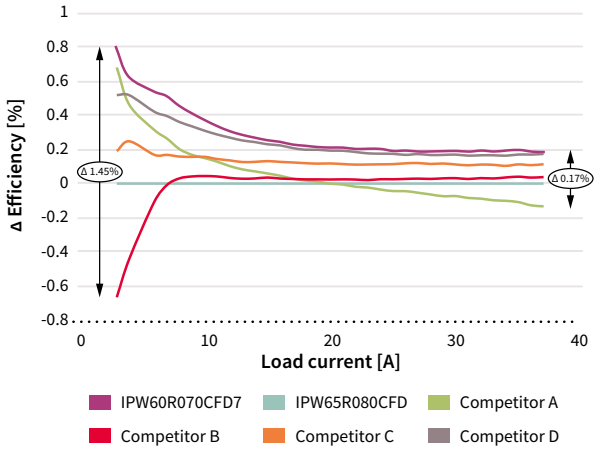

Features and benefits

Key features	Key benefits
› Ultrafast body diode	› Best-in-class hard commutation ruggedness
› Best-in-class reverse recovery charge (Q_{rr})	› Highest reliability for resonant topologies
› Improved reverse diode dv/dt and dif/dt ruggedness	› Highest efficiency with outstanding ease of use/performance trade-off
› Lowest figure of merit ($R_{DS(on)}$ x Q_G x E_{oss})	› Enabling increased power density solutions
› Best-in-class $R_{DS(on)}$/package combinations	

650 V CoolMOS™ CFD7 SJ MOSFETs

Tailored to win in resonant topologies

The need for improved efficiency and higher power density in industrial SMPS applications is driven by the megatrends of the 21st century such as big data, digitalization and e-mobility. Furthermore, over the last few years, due to the higher nominal input voltages in the US, a trend towards 450 V bus voltage, and the need for worldwide applicable designs, the demand for 650 V breakdown voltage has increased significantly - also for resonant topologies.

The 650 V device family is the voltage-range extension of Infineon's renowned CoolMOS™ CFD7 family, the successor to the well-established CoolMOS™ CFD2. It comes along with an additional 50 V breakdown voltage, integrated fast body diode, improved switching performance (compared to previous generations), and excellent thermal behavior. Thanks to these features, the 650 V CoolMOS™ CFD7 allows for the highest efficiency and power density levels in soft-switching applications such as LLC and ZVS phase-shift-full-bridge.

The best-in-class RDS(on) in TO-247, TO-220, and D²PAK enables customers to increase the power density level of their designs primarily addressing telecom, server, solar, and (off-board) EV-charging applications.

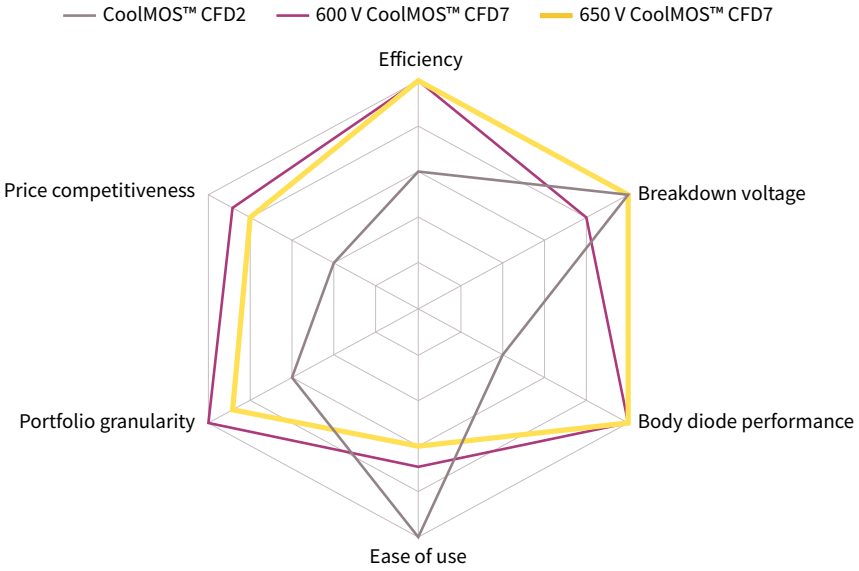

Features and benefits

Key features	Key benefits
› 650 V blocking voltage	› 50 V extra margin for increased bus voltage
› Ultrafast body diode	› Excellent hard commutation ruggedness
› Reduced switching losses	› Outstanding light load efficiency
› Low $R_{DS(on)}$ dependency over temperature	› High full load efficiency

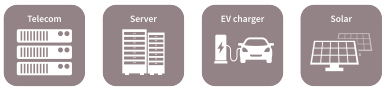

CoolMOS™ CE SJ MOSFETs

High voltage superjunction MOSFETs for consumer applications

Infineon's CoolMOS™ CE is a product family that addresses consumer and lighting applications. It offers benefits in efficiency and thermal behavior versus standard MOSFETs and is optimized for ease of use and cost-competitiveness, while delivering the right fit performance and excellent Infineon quality.

Application example: 10 W and 15 W smartphone charger

CoolMOS™ CE meets typical MOSFET case temperature requirements in charger applications

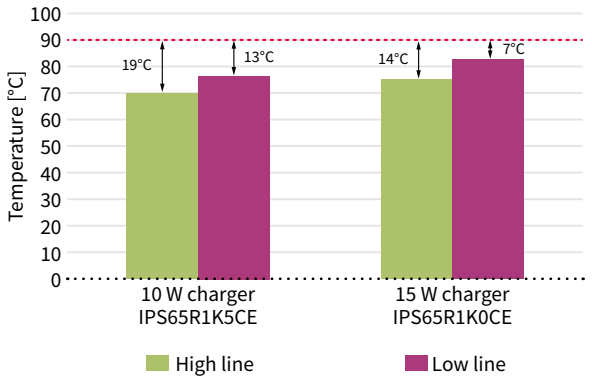

CoolMOS™ CE meets the standard efficiency requirements in charger application

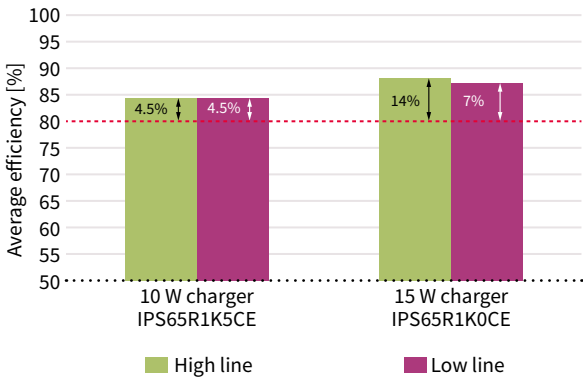

CoolMOS™ CE case temperature:
The maximum MOSFET case temperature is required to be below 90°C. CoolMOS™ CE meets this requirement and offers enough margin required for design-in flexibility.

CoolMOS™ CE efficiency performance:
CoolMOS™ CE meets the 80 percent standard efficiency requirement and offers enough margin required for design-in flexibility.

10 W design: IPS65R1K5CE
EN 55022 B radiated HF-field
30 MHz – 1 GHz position

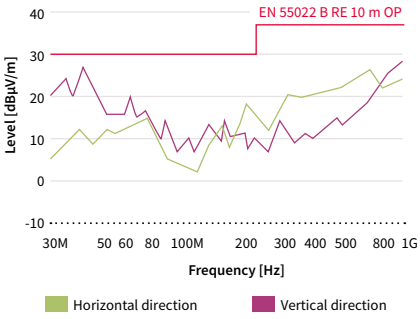

15 W design: IPS65R1K0CE
EN 55022 B radiated HF-field
30 MHz – 1 GHz position

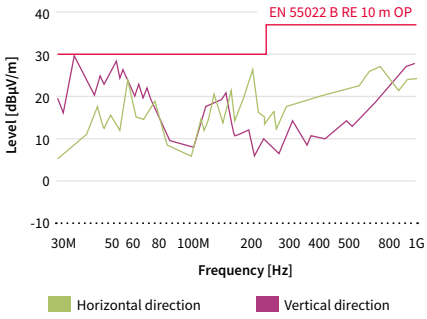

The performance of CoolMOS™ CE in the 10 W and 15 W design demonstrates that the series meets common EMI requirements for charger applications and thus, is also offering design-in flexibility.

CoolMOS™ CE customer benefits	
Product portfolio	We offer a broad portfolio covering five voltage classes in both through-hole and SMD packages
Quality	Our field failure rates are as low as 0.1 DPM
Design-in support	We have a large field application engineering team to provide professional and flexible support for your design

CoolMOS™ SJ MOSFETs for automotive

600 V CoolMOS™ CPA, 650 V CoolMOS™ CFDA, 800 V CoolMOS™ C3A, 650 V CoolMOS™ CFD7A – on the fast lane in automotive applications

The highest system performance in a size and weight constrained environment, outstanding and proven product quality and reliability, as well as 100 percent reliable delivery, are the needs of our automotive customers. With the high voltage automotive MOSFET series 600 V CoolMOS™ CPA and 650 V CoolMOS™ CFDA, 800 V CoolMOS™ C3A and 650 V CoolMOS™ CFD7A, Infineon is perfectly prepared to take the challenges in the strongly growing automotive market.

Product series	Key features	Applications	Quality
600 V CoolMOS™ CPA	**Best choice for demanding hard switching applications** › Lowest $R_{DS(on)}$ per package › Lowest gate charge value Q_G	› Hard switching topologies (with SiC diode) › PFC boost stages in on-board charger	**Quality level well beyond the formal requirements of the AEC Q101 standard through** › Special screening measures in front end, back end › Mission-profile based qualification procedures
650 V CoolMOS™ CFDA	**Easy implementation of layout and design** › Integrated fast body diode › Limited voltage overshoot during hard commutation – self-limiting dI/dt and dV/dt › Low Q_{rr} at repetitive commutation on body diode and low Q_{oss}	› Resonant switching topologies › DC-DC stage of OBC › LLC or full-bridge phase shift (ZVS) in DC-DC converter › HID lamp › Active DC link discharge › Pre-charge	
800 V CoolMOS™ C3A	› Outstanding performance in terms of efficiency, thermal behavior and ease-of-use › High blocking voltage	› Flyback low-power auxiliaries › On-board charger › HV-LV DC-DC converter › Battery disconnect unit › Traction inverter auxiliaries › DC-link pre-charge › DC-link active discharge › Isolation monitoring	
650 V CoolMOS™ CFD7A	› Improved 650 V CoolMOS™ CFDA › Higher application voltage possible (at the same proven reliability level) › New D2PAK 7-pin with increased creepage distance and Kelvin source › Considerable improvement in key parameters (higher efficiency)	› On-board charger – Hard switching topologies (with SiC diode) – PFC boost stages – DC-DC stage of OBC › HV-LV DC-DC converter – LLC or full-bridge phase shift (ZVS) › Auxiliary power supplies	

CoolMOS™ SJ MOSFET automotive – benchmark in quality and reliability

Robustness validation – example for thermal cycling test

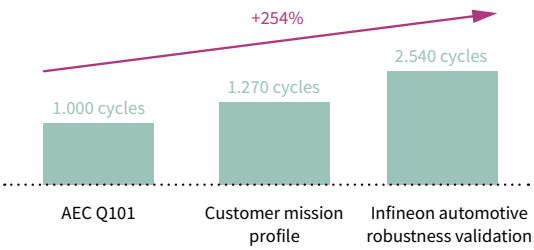

Focus on top-notch quality and reliability without any compromise – that is the principle Infineon applies during development and qualification of all CoolMOS™ superjunction technologies. For our automotive grade derivatives, the great quality levels of the industrial base technologies are further boosted by special screening measures in front- and back-end, as well as by extended qualification procedures. The Infineon robustness validation approach with extended stress-test procedures, doubling the real application requirements, is one of our key measures to ensure a quality level well beyond the formal requirements of the AEC Q101 standard. Aside from extended stress times on standard qualification tests, it comprises test procedures, specially developed by Infineon to ensure highest quality of e.g., the power metallization of our devices. Usage of robust package technologies, 100 percent gate oxide screening, and top-notch production monitoring, including yield screening measures, part average testing (PAT), statistical bin alarm (SBA), and pattern recognition procedures, complete our package to guarantee highest automotive quality. This holistic approach results in an unrivalled quality position of our 600 V CoolMOS™ CPA and 650 V CoolMOS™ CFDA, 800 V CoolMOS™ C3A and the new 650 V CoolMOS™ CFD7A.

CoolMOS™ SJ MOSFET automotive – ready to support future application trends

Driven by the carbon dioxide (CO_2) reduction initiatives, the market of plug-in hybrid PHEV and pure EV is strongly growing. Higher ranges of the electric vehicles are realized by increasing the battery capacity and the energy efficiency of the used electric components. The used battery voltage classes tend to become standardized at approximately 450 V with a trend towards the higher voltages, as this supports faster charging times and enables lighter cabling within the vehicle. Discrete high voltage components are widely used for on board charger (OBC) and DC-DC converter (LDC) applications, as price pressure increasingly displaces module-based solutions. The trend towards fast charging impacts on the power range demanded from OBC topologies. Presently, as well as in the past, a vast majority of OBC topologies have been found in the range up to 7.2 kW, whereas the future tends to stir the trend towards 11 kW or even up to 22 kW. This development, paired with a demand for high efficiency and power density at low system cost, is a strong driver for the usage of three-phase solutions.

Classic PFC stage for OBC

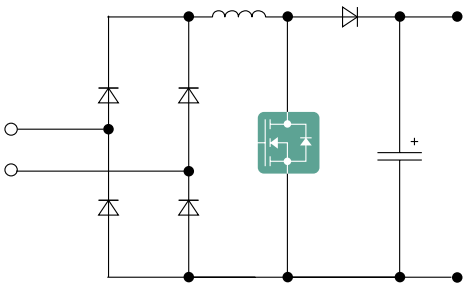

OBC Vienna rectifier for three-phase PFC in OBC

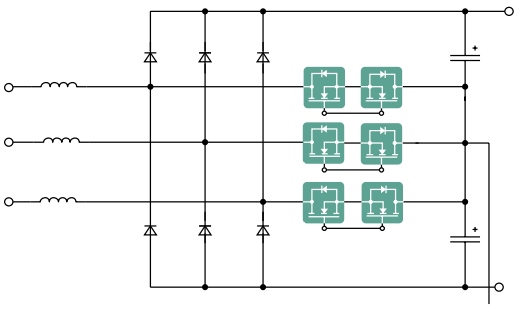

While for the lower power OBC solutions classic PFC approaches are the well-established approaches in the market, the Vienna rectifier is the optimal solution for the higher power levels. As a true three-phase topology, it delivers full power if attached to a three-phase input but is flexible enough to run on a single-phase if required. The three-level topology minimizes the filter effort compared to other solutions. By using the doubled frequency on the magnetic components, it also helps to significantly reduce the size of the passives. As a three-level topology, the Vienna rectifier, followed by two paralleled DC-DC stages, furthermore leads to a relaxed voltage stress level on the power MOSFETs. This way, it enables to handle upcoming higher battery voltage levels. The $R_{DS(on)}$, required to yield a desired efficiency level in a Vienna Rectifier, is a function of applied switching frequency and demanded power level. With our 600 V CoolMOS™ CPA and 650 V CoolMOS™ CFDA portfolio, covering an $R_{DS(on)}$ range from 45 to 660 mΩ, we are well prepared to support your next generation three-phase Vienna rectifier design. With CoolMOS™ you are ready to seize your share in the emerging high-power on-board charger markets.

600 V CoolMOS™ S7A

Best-in-class $R_{DS(on)}$*A SJ MOSFET for slow switching automotive applications

The new automotive-grade 600 V CoolMOS™ S7A superjunction MOSFET addresses xEV applications where MOSFETs are switched at low frequency, such as HV eFuse, HV eDisconnect, and on-board charger in the slow-switching leg of the PFC stage. The more stringent requirements for increased power density, safety, and reliability in these applications are met by combining the superior robustness and performance of the S7A MOSFET with the innovative package concept offered by the QDPAK TSC. The new MOSFET design offers a cost-optimized, distinctively low on-resistance $R_{DS(on)}$ of 10 mΩ, enabling increased power density and minimized conduction losses. The top-side cooled QDPAK package offers increased efficiency and controllability thanks to its' intrinsic Kelvin source, high power dissipation capability, and innovative cooling concept.

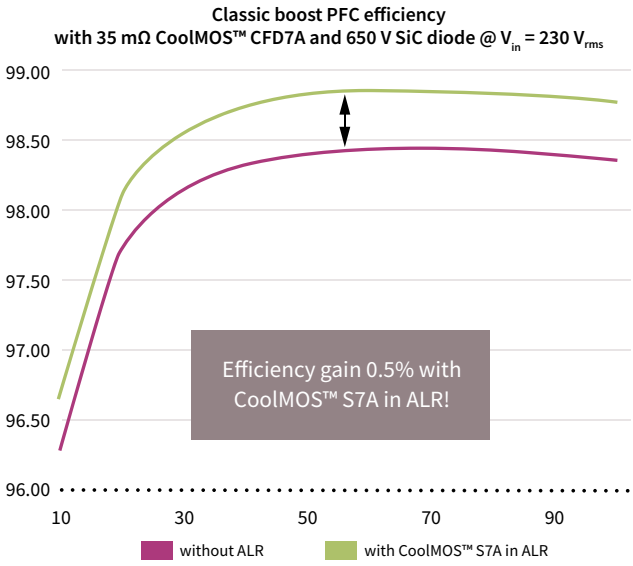

An efficiency improvement of +0.5% and a reduction in power losses of -30% can be achieved in a classic boost PFC topology for OBC by replacing the diode bridge with the S7A in an ALR active line rectification.

CoolMOS™ S7A is the semiconductor solution for HV eDisconnect and HV eFuse. It answers eMobility needs with respect to reliability (maintenance-free), flexible and cost-optimized system integration, scalability, and minimized failure propagation

Component battery architecture representation

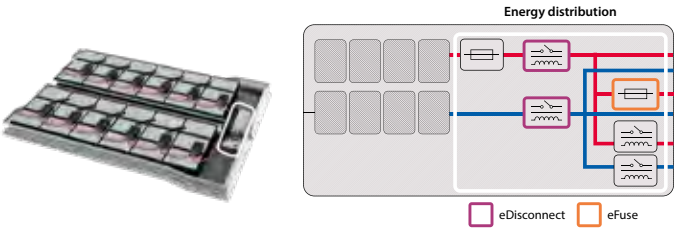

Features and benefits

Key features	Key benefits
Best-in-class $R_{DS(on)}$: 10 mΩ	Minimized conduction losses
Smallest $R_{DS(on)}$ in SMD packages	Increased energy efficiency
Optimized for conduction performance	More compact and easier designs
Improved thermal resistance	Increased power density
High pulse current capability	Lower TCO cost or BOM cost
Body diode robustness at AC line commutation	Flexible system integration
Kelvin-source concept	Variable cooling strategy

CoolMOS™ SJ MOSFET high power package innovations

Space-saving and high performance packages

An SMD package for high efficiency and controllability in automotive applications

TO-263-7 (D^2PAK-7-pin)

The TO-263-7-pin package is a SMD package addressing automotive-specific requirements including high efficiency and controllability. The Kelvin source pin leads to reduced switching losses. Furthermore, the new 7-pin design increases the creepage distance at the PCB and therefore helps to improve the manufacturability.

Innovative top-side cooled SMD solution for high power applications

Top-side cooled Double & Quadruple DPAK (DDPAK + QDPAK)

These top-side cooled surface mount device (SMD) packages address high power SMPS applications such as PC power, solar, server and telecom as well as automotive applications like HV eDisconnect, HV eFuse and on-board charger. SMD-based SMPS designs support fast switching and help to reduce the parasitic inductance associated with long leaded packages such as the common TO-220 & TO-247 package. In today's SMD-based designs, the output power is restricted by the thermal limit of the PCB material because the heat must be dissipated through the board. Thanks to the top-side cooling concept of DDPAK & QDPAK, the thermal decoupling of board and semiconductor is possible, enabling higher power density or improved system lifetime.

For highest efficiency and controllability in high power SMPS markets

TO-247 4-pin with asymmetric leads

The TO-247 4-pin package with asymmetric leads is an optimized version of the standard TO-247 4-pin and enables highest efficiency and controllability in the high power SMPS market. The fourth pin acts as a Kelvin source. The main current of the switch is placed outside of the gate loop and the feedback is eliminated. This leads to less switching losses, especially at high currents. Secondly, the EMI will be reduced due to cleaner waveforms. In addition, the asymmetric leads further improve the ease of use in the design-in process. Compared to the standard TO-247 4-pin the distance between the critical pins has been increased to enable simplified wave soldering and reduced board yield loss.

Enabling significant space savings

ThinPAK 8x8

With a very small footprint of only 64 mm^2 (vs. 150 mm^2 for the D^2PAK) and a very low profile with only 1 mm height (vs. 4.4 mm for the D^2PAK) the ThinPAK 8x8 leadless SMD package for high voltage MOSFETs is a first choice to decrease system size in power-density driven designs. Low parasitic inductance and a separate 4-pin Kelvin source connection offer best efficiency and ease of use. The package is RoHS compliant with halogen-free mold compound.

Optimized for high power applications

TO-Leadless

Combined with the latest CoolMOS™ C7 Gold (G7) technology, the TO-Leadless (TOLL) package is Infineon's flagship SMD package for high power/high current SMD solutions. Compared to D^2PAK 7-pin, TO-Leadless shows a 30 percent reduction in footprint, yet offers improved thermal performance. This and the 50 percent height reduction result in a significant advantage whenever highest power density is demanded. Equipped with 4-pin Kelvin source connection and low parasitic inductances the package offers best efficiency and ease of use. The package is MSL1 compliant and reflow solderable.

CoolMOS™ SJ MOSFET low power package innovations

Addressing today's consumer needs

Cost-effective drop-in replacement for DPAK

SOT-223

The SOT-223 package without middle pin is a cost-effective alternative to DPAK, addressing the need for cost reductions in price sensitive applications. It offers a smaller footprint, while still being pin-to-pin compatible with DPAK, thus, allowing a drop-in replacement for DPAK and second sourcing. Moreover, SOT-223 achieves comparable thermal performance to DPAK and enables customers to achieve improved form factors or space savings in designs with low power dissipation.

Solution for slim and small adapters and chargers

ThinPAK 5x6

ThinPAK 5x6 reduces the PCB area by 52 percent and height by 54 percent when compared to the DPAK package which is widely used in chargers and adapters. ThinPAK 5x6 is the right device to replace DPAK and meet the market demands of slimmer and smaller designs. Also, ThinPAK 5x6 enables a reduced charger and adapter case hot spot temperature by increasing the space between the MOSFET and the charger and adapter case.

Solution for height reduction in adapters and chargers

TO-220 FullPAK Narrow Lead

Infineon's TO-220 FullPAK Narrow Lead addresses customer needs with regards to height reduction requirements in adapter and charger applications. By offering an optimized standoff width and height and improved creepage distance, the package can be fully inserted into the PCB without any production concerns and, therefore, is especially suitable for slim and semi-slim adapter solutions.

Improved creepage distance for open frame power supplies

TO-220 FullPAK Wide Creepage

This package solution has an increased creepage distance between the pins to 4.25 mm compared to 2.54 mm of a TO-220 FullPAK package. It targets open frame power supplies such as TV sets and PC power, where dust can enter the case through air vents. Dust particles can reduce the effective creepage between pins over time, which may lead to high voltage arcing. The package meets the requirements of open frame power supplies without any additional measures. Thus, it reduces system cost by offering an alternative to frequently used approaches to increase creepage distance.

950 V CoolMOS™ P7 ACTIVE & PREFERRED

$R_{DS(on)}$ [mΩ]	TO-220	TO-220 FullPAK	SOT-223	TO-251 Long lead	TO-252 (DPAK)
450		IPA95R450P7		IPU95R450P7	IPD95R450P7
750		IPA95R750P7		IPU95R750P7	IPD95R750P7
1200		IPA95R1K2P7	IPN95R1K2P7	IPU95R1K2P7	IPD95R1K2P7
2000			IPN95R2K0P7	IPU95R2K0P7	IPD95R2K0P7
3700			IPN95R3K7P7	IPU95R3K7P7	

900 V CoolMOS™ C3 ACTIVE

$R_{DS(on)}$ [mΩ]	TO-220	TO-262 (I^2PAK)	TO-263 (D^2PAK)	TO-220 FullPAK	TO-247	TO-252 (DPAK)
120					IPW90R120C3	
340	IPP90R340C3	IPI90R340C3	IPB90R340C3	IPA90R340C3	IPW90R340C3	
500		IPI90R500C3		IPA90R500C3	IPW90R500C3	
800	IPP90R800C3			IPA90R800C3		
1200	IPP90R1K2C3	IPI90R1K2C3		IPA90R1K2C3		IPD90R1K2C3

800 V CoolMOS™ P7 ACTIVE & PREFERRED

$R_{DS(on)}$ [mΩ]	TO -220	TO-220 FullPAK	TO-247	TO-252 (DPAK)	TO-251 (IPAK)	TO-251 (IPAK Short Lead)	SOT-223	TO-220 FullPAK narrow lead	ThinPAK 5x6
280	IPP80R280P7	IPA80R280P7	IPW80R280P7	IPD80R280P7				IPAN80R280P7	
360	IPP80R360P7	IPA80R360P7	IPW80R360P7	IPD80R360P7				IPAN80R360P7	
450	IPP80R450P7	IPA80R450P7		IPD80R450P7				IPAN80R450P7	
600	IPP80R600P7	IPA80R600P7		IPD80R600P7	IPU80R600P7	IPS80R600P7	IPN80R600P7		IPLK80R600P7*
750	IPP80R750P7	IPA80R750P7		IPD80R750P7	IPU80R750P7	IPS80R750P7	IPN80R750P7		IPLK80R750P7*
900	IPP80R900P7	IPA80R900P7		IPD80R900P7	IPU80R900P7	IPS80R900P7	IPN80R900P7		IPLK80R900P7*
1200	IPP80R1K2P7	IPA80R1K2P7		IPD80R1K2P7	IPU80R1K2P7	IPS80R1K2P7	IPN80R1K2P7		
1400	IPP80R1K4P7	IPA80R1K4P7		IPD80R1K4P7	IPU80R1K4P7	IPS80R1K4P7	IPN80R1K4P7		IPLK80R1K2P7*
2000				IPD80R2K0P7	IPU80R2K0P7	IPS80R2K0P7	IPN80R2K0P7		IPLK80R1K4P7*
2400				IPD80R2K4P7	IPU80R2K4P7	IPS80R2K4P7	IPN80R2K4P7		IPLK80R2K0P7*
3300				IPD80R3K3P7	IPU80R3K3P7		IPN80R3K3P7		
4500				IPD80R4K5P7	IPU80R4K5P7		IPN80R4K5P7		

*Coming soon

For more details on the product, click on the part number or contact our product support.

800 V CoolMOS™ CE ACTIVE

$R_{DS(on)}$ [mΩ]	TO-220 FullPAK	TO-252 (DPAK)	TO-251 (IPAK)
310	IPA80R310CE		
460	IPA80R460CE		
650	IPA80R650CE		
1000	IPA80R1K0CE	IPD80R1K0CE	IPU80R1K0CE
1400	IPA80R1K4CE	IPD80R1K4CE	
2800		IPD80R2K8CE	

800 V CoolMOS™ C3 ACTIVE

$R_{DS(on)}$ [mΩ]	TO-220	TO-263 (D^2PAK)	TO-220 FullPAK	TO-247	TO-252 (DPAK)
85				SPW55N80C3	
290	SPP17N80C3	SPB17N80C3	SPA17N80C3	SPW17N80C3	
450	SPP11N80C3		SPA11N80C3	SPW11N80C3	
650	SPP08N80C3		SPA08N80C3		
900	SPP06N80C3		SPA06N80C3		SPD06N80C3
1300	SPP04N80C3		SPA04N80C3		SPD04N80C3
2700			SPA02N80C3		SPD02N80C3

700 V CoolMOS™ P7 ACTIVE & PREFERRED

$R_{DS(on)}$ [mΩ]	TO-251 (IPAK Short Lead)	TO-220 FullPAK	TO-252 (DPAK)	TO-220 FullPAK narrow lead	TO-251 (IPAK Short Lead w/ ISO Standoff)	SOT-223	ThinPAK 5x6
360	IPS70R360P7S	IPA70R360P7S	IPD70R360P7S	IPAN70R360P7S	IPSA70R360P7S	IPN70R360P7S	
450		IPA70R450P7S		IPAN70R450P7S	IPSA70R450P7S	IPN70R450P7S	
600	IPS70R600P7S	IPA70R600P7S	IPD70R600P7S	IPAN70R600P7S	IPSA70R600P7S	IPN70R600P7S	IPLK70R600P7*
750		IPA70R750P7S		IPAN70R750P7S	IPSA70R750P7S	IPN70R750P7S	IPLK70R750P7*
900	IPS70R900P7S	IPA70R900P7S	IPD70R900P7S	IPAN70R900P7S	IPSA70R900P7S	IPN70R900P7S	IPLK70R900P7*
1200					IPSA70R1K2P7S	IPN70R1K2P7S	IPLK70R1K2P7*
1400	IPS70R1K4P7S		IPD70R1K4P7S		IPSA70R1K4P7S	IPN70R1K4P7S	IPLK70R1K4P7*
2000					IPSA70R2K0P7S	IPN70R2K0P7S	IPLK70R2K0P7*

700 V CoolMOS™ CE ACTIVE

$R_{DS(on)}$ [mΩ]	TO-220 FullPAK Wide Creepage	TO-262 (I^2PAK)	TO-251 (IPAK Short Lead with ISO Standoff)	TO-252 (DPAK)	TO-251 (IPAK Short Lead)	SOT-223
600	IPAW70R600CE		IPSA70R600CE	IPD70R600CE		
950	IPAW70R950CE	IPI70R950CE	IPSA70R950CE	IPD70R950CE	IPS70R950CE	
1000						IPN70R1K0CE
1400			IPSA70R1K4CE	IPD70R1K4CE	IPS70R1K4CE	
1500						IPN70R1K5CE
2000			IPSA70R2K0CE	IPD70R2K0CE	IPS70R2K0CE	
2100						IPN70R2K1CE

650 V CoolMOS™ C7 Gold (G-series) ACTIVE & PREFERRED

$R_{DS(on)}$ [mΩ]	TO-Leadless (TOLL)
33	IPT65R033G7
105	IPT65R105G7
195	IPT65R195G7

*Coming soon

For more details on the product, click on the part number or contact our product support.

650 V CoolMOS™ C7 ACTIVE & PREFERRED

$R_{DS(on)}$ [mΩ]	TO-220	TO-263 (D^2PAK)	TO-220 FullPAK	TO-247	TO-247 4-pin	TO-252 (DPAK)	ThinPAK 8x8
19				IPW65R019C7	IPZ65R019C7		
45	IPP65R045C7	IPB65R045C7	IPA65R045C7	IPW65R045C7	IPZ65R045C7		
65	IPP65R065C7	IPB65R065C7	IPA65R065C7	IPW65R065C7	IPZ65R065C7		
70							IPL65R070C7
95	IPP65R095C7	IPB65R095C7	IPA65R095C7	IPW65R095C7	IPZ65R095C7		
99							IPL65R099C7
125	IPP65R125C7	IPB65R125C7	IPA65R125C7	IPW65R125C7			
130							IPL65R130C7
190	IPP65R190C7	IPB65R190C7	IPA65R190C7	IPW65R190C7		IPD65R190C7	
195							IPL65R195C7
225	IPP65R225C7	IPB65R225C7	IPA65R225C7			IPD65R225C7	
230							IPL65R230C7

650 V CoolMOS™ CE ACTIVE

$R_{DS(on)}$ [mΩ]	TO-220 FullPAK	TO-252 (DPAK)	TO-251 (IPAK Short Lead)	SOT-223	TO-220 FullPAK Narrow Lead
400	IPA65R400CE	IPD65R400CE	IPS65R400CE		
650	IPA65R650CE	IPD65R650CE	IPS65R650CE		IPAN65R650CE
1000	IPA65R1K0CE	IPD65R1K0CE	IPS65R1K0CE		
1500	IPA65R1K5CE	IPD65R1K5CE		IPN65R1K5CE	

650 V CoolMOS™ CFD2 ACTIVE

$R_{DS(on)}$ [mΩ]	TO-220	TO-262 (I^2PAK)	TO-263 (D^2PAK)	TO-220 FullPAK	TO-247	TO-252 (DPAK)	ThinPAK 8x8
41					IPW65R041CFD		
80					IPW65R080CFD		
110	IPP65R110CFD		IPB65R110CFD	IPA65R110CFD	IPW65R110CFD		
150	IPP65R150CFD		IPB65R150CFD	IPA65R150CFD	IPW65R150CFD		
165							IPL65R165CFD
190	IPP65R190CFD	IPI65R190CFD	IPB65R190CFD	IPA65R190CFD	IPW65R190CFD		
210							IPL65R210CFD
310	IPP65R310CFD		IPB65R310CFD	IPA65R310CFD			
340							IPL65R340CFD
420	IPP65R420CFD			IPA65R420CFD	IPW65R420CFD	IPD65R420CFD	
660				IPA65R660CFD		IPD65R660CFD	
950						IPD65R950CFD	
1400						IPD65R1K4CFD	

650 V CoolMOS™ CFD7 ACTIVE & PREFERRED

$R_{DS(on)}$ [mΩ]	TO-220	TO-263 (D^2PAK)	TO-247	TO-247 4-pin	TO-Leadless (TOLL)	ThinPAK 8x8
18			IPW65R018CFD7*	IPZA65R018CFD7*		
29			IPW65R029CFD7	IPZA65R029CFD7		
40					IPT65R040CFD7*	
41	IPP65R041CFD7	IPB65R041CFD7	IPW65R041CFD7			
60	IPP65R060CFD7		IPW65R060CFD7		IPT65R060CFD7*	
65						IPL65R065CFD7*
80					IPT65R080CFD7*	
90	IPP65R090CFD7	IPB65R090CFD7	IPW65R090CFD7			
95						IPL65R095CFD7*
99					IPT65R099CFD7*	
110	IPP65R110CFD7	IPB65R110CFD7	IPW65R110CFD7			
115						IPL65R115CFD7*
125		IPB65R125CFD7	IPW65R125CFD7		IPT65R125CFD7*	
130						IPL65R130CFD7*
155	IPP65R155CFD7	IPB65R155CFD7	IPW65R155CFD7		IPT65R155CFD7*	
160						IPL65R160CFD7*
190	IPP65R190CFD7				IPT65R190CFD7*	
200						IPL65R200CFD7*

*Coming soon

For more details on the product, click on the part number or contact our product support.

600 V CoolMOS™ PFD7 ACTIVE & PREFERRED

$R_{DS(on)}$ [mΩ]	TO-220 FullPAK Narrow Leads	TO-251 (IPAK Short Lead)	TO-252 (DPAK)	SOT-223	ThinPAK 5x6
125	IPAN60R125PFD7S				
210	IPAN60R210PFD7S	IPS60R210PFD7S	IPD60R210PFD7S		
280	IPAN60R280PFD7S	IPS60R280PFD7S	IPD60R280PFD7S		
360	IPAN60R360PFD7S	IPS60R360PFD7S	IPD60R360PFD7S	IPN60R360PFD7S	IPLK60R360PFD7
600		IPS60R600PFD7S	IPD60R600PFD7S	IPN60R600PFD7S	IPLK60R600PFD7
1000		IPS60R1K0PFD7S	IPD60R1K0PFD7S	IPN60R1K0PFD7S	IPLK60R1K0PFD7
1500			IPD60R1K5PFD7S	IPN60R1K5PFD7S	IPLK60R1K5PFD7
2000			IPD60R2K0PFD7S	IPN60R2K0PFD7S	

600 V CoolMOS™ P7 ACTIVE & PREFERRED
Industrial grade

$R_{DS(on)}$ [mΩ]	TO -220	TO-220 FullPAK	TO-247	TO-247 4-pin asymmetric leads	TO-252 (DPAK)	ThinPAK 8x8	D^2PAK
24			IPW60R024P7	IPZA60R024P7			
37			IPW60R037P7	IPZA60R037P7			
45			IPW60R045P7	IPZA60R045P7			IPB60R045P7
60	IPP60R060P7	IPA60R060P7	IPW60R060P7	IPZA60R060P7			IPB60R060P7
65						IPL60R065P7	
80	IPP60R080P7	IPA60R080P7	IPW60R080P7	IPZA60R080P7		IPL60R085P7	IPB60R080P7
99	IPP60R099P7	IPA60R099P7	IPW60R099P7	IPZA60R099P7			IPB60R099P7
105						IPL60R105P7	
120	IPP60R120P7	IPA60R120P7	IPW60R120P7	IPZA60R120P7			IPB60R120P7
125						IPL60R125P7	
160	IPP60R160P7	IPA60R160P7					
180	IPP60R180P7	IPA60R180P7	IPW60R180P7	IPZA60R180P7	IPD60R180P7		IPB60R180P7
185						IPL60R185P7	
280	IPP60R280P7	IPA60R280P7			IPD60R280P7		IPB60R280P7
285						IPL60R285P7	
360	IPP60R360P7	IPA60R360P7			IPD60R360P7		IPB60R360P7
365						IPL60R365P7	
600	IPP60R600P7	IPA60R600P7			IPD60R600P7		

600 V CoolMOS™ P7 ACTIVE & PREFERRED
Standard grade

$R_{DS(on)}$ [mΩ]	TO-220 FullPAK	TO-220 FullPAK Narrow lead	TO-252 (DPAK)	TO-220 FullPAK Wide Creepage
180	IPA60R180P7S	IPAN60R180P7S	IPD60R180P7S	IPAW60R180P7S
280	IPA60R280P7S	IPAN60R280P7S	IPD60R280P7S	IPAW60R280P7S
360	IPA60R360P7S	IPAN60R360P7S	IPD60R360P7S	IPAW60R360P7S
600	IPA60R600P7S	IPAN60R600P7S	IPD60R600P7S	IPAW60R600P7S

600 V CoolMOS™ CFD7 ACTIVE & PREFERRED

$R_{DS(on)}$ [mΩ]	TO-220	TO-263 (D^2PAK)	TO-220 FullPAK	TO-247	TO-252 (DPAK)	ThinPAK 8x8	DDPAK	TO-Leadless (TOLL)	QDPAK
158				IPW60R018CFD7					IPDQ60R015CFD7*
18				IPW60R018CFD7					
20									IPDQ60R020CFD7*
24				IPW60R024CFD7					
25									IPDQ60R025CFD7*
31/35				IPW60R031CFD7				IPT60R035CFD7	IPDQ60R035CFD7*
40/45		IPB60R040CFD7		IPW60R040CFD7			IPDD60R045CFD7	IPT60R045CFD7	IPDQ60R045CFD7*
55		IPB60R055CFD7		IPW60R055CFD7			IPDD60R055CFD7	IPT60R055CFD7	IPDQ60R055CFD7
60						IPL60R060CFD7			
70	IPP60R070CFD7	IPB60R070CFD7		IPW60R070CFD7					
75						IPL60R075CFD7	IPDD60R075CFD7	IPT60R075CFD7	IPDQ60R075CFD7*
90/95	IPP60R090CFD7	IPB60R090CFD7		IPW60R090CFD7		IPL60R095CFD7	IPDD60R090CFD7	IPT60R090CFD7	
105/115	IPP60R105CFD7	IPB60R105CFD7		IPW60R105CFD7		IPL60R115CFD7	IPDD60R105CFD7	IPT60R105CFD7	
125/140	IPP60R125CFD7	IPB60R125CFD7	IPA60R125CFD7	IPW60R125CFD7		IPL60R140CFD7	IPDD60R125CFD7	IPT60R125CFD7	
145/160	IPP60R145CFD7	IPB60R145CFD7	IPA60R145CFD7	IPW60R145CFD7	IPD60R145CFD7	IPL60R160CFD7	IPDD60R145CFD7	IPT60R145CFD7	
170	IPP60R170CFD7	IPB60R170CFD7	IPA60R170CFD7	IPW60R170CFD7	IPD60R170CFD7		IPDD60R170CFD7		
185						IPL60R185CFD7			
210/225	IPP60R210CFD7	IPB60R210CFD7	IPA60R210CFD7		IPD60R210CFD7	IPL60R225CFD7			
280	IPP60R280CFD7	IPB60R280CFD7	IPA60R280CFD7		IPD60R280CFD7				
360	IPP60R360CFD7 *	IPB60R360CFD7	IPA60R360CFD7		IPD60R360CFD7				

*Coming soon

For more details on the product, click on the part number or Contact details on the product click on the part number.

600 V CoolMOS™ S7 ACTIVE & PREFERRED

$R_{DS(on)}$ [mΩ]	TO -220	TO-Leadless (TOLL)	QDPAK
10			IPDQ60R010S7
22	IPP60R022S7	IPT60R022S7	IPDQ60R022S7*
40		IPT60R040S7	IPDQ60R040S7*
65		IPT60R065S7	IPDQ60R065S7*

600 V CoolMOS™ C7 Gold (G-series) ACTIVE & PREFERRED

$R_{DS(on)}$ [mΩ]	TO-Leadless (TOLL)	TO-252 (Double DPAK)
28	IPT60R028G7	
50	IPT60R050G7	IPDD60R050G7
80	IPT60R080G7	IPDD60R080G7
102	IPT60R102G7	IPDD60R102G7
125	IPT60R125G7	IPDD60R125G7
150	IPT60R150G7	IPDD60R150G7
190		IPDD60R190G7

600 V CoolMOS™ C7 ACTIVE & PREFERRED

$R_{DS(on)}$ [mΩ]	TO-220	TO-263 (D^2PAK)	TO-220 FullPAK	TO-247	TO-247 4-pin	TO-252 (DPAK)	ThinPAK 8x8
17				IPW60R017C7	IPZ60R017C7		
40	IPP60R040C7	IPB60R040C7		IPW60R040C7	IPZ60R040C7		
60	IPP60R060C7	IPB60R060C7	IPA60R060C7	IPW60R060C7	IPZ60R060C7		
65							IPL60R065C7
99	IPP60R099C7	IPB60R099C7	IPA60R099C7	IPW60R099C7	IPZ60R099C7		
104							IPL60R104C7
120	IPP60R120C7	IPB60R120C7	IPA60R120C7	IPW60R120C7			
125							IPL60R125C7
180	IPP60R180C7	IPB60R180C7	IPA60R180C7	IPW60R180C7		IPD60R180C7	
185							IPL60R185C7

600 V CoolMOS™ P6 ACTIVE

$R_{DS(on)}$ [mΩ]	TO-220	TO-220 FullPAK	TO-247	TO-247 4-pin	TO-252 (DPAK)	ThinPAK 5x6	ThinPAK 8x8
41			IPW60R041P6				
70			IPW60R070P6	IPZ60R070P6			
99	IPP60R099P6	IPA60R099P6	IPW60R099P6	IPZ60R099P6			
125	IPP60R125P6	IPA60R125P6	IPW60R125P6				
160	IPP60R160P6	IPA60R160P6	IPW60R160P6				
180							IPL60R180P6
190	IPP60R190P6	IPA60R190P6	IPW60R190P6				
210							IPL60R210P6
230		IPA60R230P6					
255							
280	IPP60R280P6	IPA60R280P6	IPW60R280P6				
330/360						IPL60R360P6S	
380		IPA60R380P6			IPD60R380P6		
600		IPA60R600P6			IPD60R600P6		
650						IPL60R650P6S	

* Coming soon

For more details on the product, click on the part number or contact our product support.

600 V CoolMOS™ CE ACTIVE

Consumer | LED | BLDC Motor | LCD TV | Adapter | Charger | PC Power

$R_{DS(on)}$ [mΩ]	TO-220 FullPAK	TO-220 FullPAK Wide Creepage	TO-252 (DPAK)	TO-251 (IPAK)	TO-251 (IPAK Short Lead)	SOT-223	TO-220 FullPAK Narrow Lead
190		IPAW60R190CE					
280		IPAW60R280CE					
380		IPAW60R380CE					
400	IPA60R400CE		IPD60R400CE		IPS60R400CE		
460	IPA60R460CE		IPD60R460CE		IPS60R460CE		
600		IPAW60R600CE					
650	IPA60R650CE		IPD60R650CE		IPS60R650CE		IPAN60R650CE
800			IPD60R800CE		IPS60R800CE		IPAN60R800CE
1000	IPA60R1K0CE		IPD60R1K0CE	IPU60R1K0CE	IPS60R1K0CE	IPN60R1K0CE	
1500	IPA60R1K5CE		IPD60R1K5CE	IPU60R1K5CE	IPS60R1K5CE	IPN60R1K5CE	
2100			IPD60R2K1CE	IPU60R2K1CE	IPS60R2K1CE	IPN60R2K1CE	
3400			IPD60R3K4CE		IPS60R3K4CE	IPN60R3K4CE	

500 V CoolMOS™ CE ACTIVE & PREFERRED

LCD TV | Adapter | Lighting | PC Power | Consumer | LED

$R_{DS(on)}$ [mΩ]	TO-220	TO-220 FullPAK	TO-252 (DPAK)	SOT-223	TO-220 FullPAK Narrow Lead
190	IPP50R190CE	IPA50R190CE			
280	IPP50R280CE	IPA50R280CE	IPD50R280CE		
380	IPP50R380CE	IPA50R380CE	IPD50R380CE		
500		IPA50R500CE	IPD50R500CE		IPAN50R500CE
650			IPD50R650CE	IPN50R650CE	
800		IPA50R800CE	IPD50R800CE	IPN50R800CE	
950		IPA50R950CE	IPD50R950CE	IPN50R950CE	
1400			IPD50R1K4CE	IPN50R1K4CE	
2000			IPD50R2K0CE	IPN50R2K0CE	
3000			IPD50R3K0CE	IPN50R3K0CE	

For more details on the product, click on the part number or contact our product support.

CoolMOS™ SJ MOSFET automotive

800 V CoolMOS™ C3A ACTIVE & PREFERRED

$R_{DS(on)}$ @ T_J = 25°C V_{GS} = 10 V [mΩ]	TO-247	TO-252	TO-263
290	IPW80R290C3A		IPB80R290C3A
2700		IPD80R2K7C3A	

650 V CoolMOS™ CFDA ACTIVE & PREFERRED

$R_{DS(on)}$ @ T_J = 25°C V_{GS} = 10 V [mΩ]	TO-220	TO-247	TO-252	TO-263
48		IPW65R048CFDA		
80		IPW65R080CFDA		
110	IPP65R110CFDA	IPW65R110CFDA		IPB65R110CFDA
150	IPP65R150CFDA	IPW65R150CFDA		IPB65R150CFDA
190				IPB65R190CFDA
310	IPP65R310CFDA			IPB65R310CFDA
420			IPD65R420CFDA	
660			IPD65R660CFDA	IPB65R660CFDA

For more details on the product, click on the part number or contact our product support.

650 V CoolMOS™ CFD7A ACTIVE & PREFERRED

$R_{DS(on)}$ @ T_J = 25°C V_{GS} = 10 V [mΩ]	TO-220	TO-247	TO-247 Short leads	TO-263-3 D^2PAK 3-pin	TO-263-7 D^2PAK 7-pin
22		IPW65R022CFD7A*	IPWS65R022CFD7A*		
35		IPW65R035CFD7A	IPWS65R035CFD7A		
50	IPP65R050CFD7A	IPW65R050CFD7A	IPWS65R050CFD7A	IPB65R050CFD7A	IPBE65R050CFD7A
75	IPP65R075CFD7A*	IPW65R075CFD7A	IPWS65R075CFD7A	IPB65R075CFD7A*	IPBE65R075CFD7A
99	IPP65R099CFD7A	IPW65R099CFD7A		IPB65R099CFD7A	IPBE65R099CFD7A
115	IPP65R115CFD7A	IPW65R115CFD7A		IPB65R115CFD7A	IPBE65R115CFD7A
145	IPP65R145CFD7A*	IPW65R145CFD7A		IPB65R145CFD7A*	IPBE65R145CFD7A
190	IPP65R190CFD7A	IPW65R190CFD7A		IPB65R190CFD7A	IPBE65R190CFD7A
230				IPB65R230CFD7A	IPBE65R230CFD7A

600 V CoolMOS™ CPA ACTIVE

$R_{DS(on)}$ @ T_J = 25°C V_{GS} = 10 V [mΩ]	TO-220	TO-247	TO-262	TO-263
45		IPW60R045CPA		
75		IPW60R075CPA		
99	IPP60R099CPA	IPW60R099CPA	IPI60R099CPA	IPB60R099CPA
199				IPB60R199CPA
299				IPB60R299CPA

600 V CoolMOS™ S7A ACTIVE & PREFERRED

$R_{DS(on)}$ @ T_J = 25°C V_{GS} = 10 V [mΩ]	QDPAK TSC	QDPAK BSC	TO-247-3
40		IPQC60R040S7A*	
22	IPDQ60R022S7A*		IPW60R022S7A*
17		IPQC60R017S7A*	
10	IPDQ60R010S7A	IPQC60R010S7A*	IPW60R010S7A*

* Coming soon

For more details on the product, click on the part number or contact our product support.

CoolMOS™ SJ MOSFETs – packages

SOT-223

		$R_{DS(on)}$ [mΩ]									
Voltage [V]	Series	0-59	60-89	90-149	150-199	200-299	300-400	401-600	601-899	900-1500	>1500
500	CE								650/800	950/1400	2000/3000
600	P7						360	600		1000/1500	2000
	CE									1000/1500	2100/3400
	PFD7						360	600		1000/1500	2000
650	CE									1500	
700	P7						360	450/600	750	900/1200/1400	2000
	CE									1000/1500	2100
800	P7								600/750	900/1200/1400	2000/2400/ 3300/4500
950	P7									1200	2000/3700

TO-247

		$R_{DS(on)}$ [mΩ]									
Voltage [V]	Series	0-59	60-89	90-149	150-199	200-299	300-400	401-600	601-899	900-1500	>1500
600	P7	24/37/45	60/80	99/120	180						
	C7	17/40	60	99/120	180						
	P6	41	70	99/125	160/190	280					
	CFD7	18/24/31/40/55	70	90/105/125/145	170						
	CPA	45	75	99							
650	CFD7	18*/29/41	60	90/110/125	155						
	C7	19/45	65	95/125	190						
	CFD2	41	80	110	150/190			420			
	CFDA	48	80	110	150/190						
	CFD7A	22*/35/50	75	99/115/145	190	230					
800	P7					280	360				
	C3		85			290		450			
900	C3			120			340	500			

TO-247 short leads

		$R_{DS(on)}$ [mΩ]									
Voltage [V]	Series	0-59	60-89	90-149	150-199	200-299	300-400	401-600	601-899	900-1500	>1500
650	CFD7A	22*/35/50	75								

TO-247 4-pin

		$R_{DS(on)}$ [mΩ]									
Voltage [V]	Series	0-59	60-89	90-149	150-199	200-299	300-400	401-600	601-899	900-1500	>1500
600	C7	17/40	60	99							
	P6		70	99							
650	C7	19/45	65	95							

TO-247 4-pin asymmetric leads

		$R_{DS(on)}$ [mΩ]									
Voltage [V]	Series	0-59	60-89	90-149	150-199	200-299	300-400	401-600	601-899	900-1500	>1500
600	P7	24/37/45	60/80	99/120	180						
650	CFD7	18*/29									

IPAK

		$R_{DS(on)}$ [mΩ]									
Voltage [V]	Series	0-59	60-89	90-149	150-199	200-299	300-400	401-600	601-899	900-1500	>1500
600	CE									1000/1500	2100
800	P7							600	750	900/1200/1400	2000/2400 3300/4500
	CE									1000	
950	P7							450	750	1200	2000/3700

* Coming soon

ACTIVE & PREFERRED

For more details on the product, click on the part number.

IPAK Short Lead

		$R_{DS(on)}$ [mΩ]									
Voltage [V]	Series	0-59	60-89	90-149	150-199	200-299	300-400	401-600	601-899	900-1500	>1500
600	CE						400		650/800	1000/1500	2100/3400
	PFD7					210/280	360	600		1000	
650	CE						400		650	1000	
700	P7						360/600			900/1400	
	CE									950/1400	2000
800	P7							600	750	900/1200/1400	2000/2400

IPAK Short Lead with ISO Standoff

		$R_{DS(on)}$ [mΩ]									
Voltage [V]	Series	0-59	60-89	90-149	150-199	200-299	300-400	401-600	601-899	900-1500	>1500
700	P7						360	450/600	750	900/1200/1400	2000
	CE							600		950/1400	2000

I²PAK

		$R_{DS(on)}$ [mΩ]									
Voltage [V]	Series	0-59	60-89	90-149	150-199	200-299	300-400	401-600	601-899	900-1500	>1500
600	CPA			99							
650	CFD2				199						
700	CE									950	
900	C3						340	500		1200	

DPAK

		$R_{DS(on)}$ [mΩ]									
Voltage [V]	Series	0-59	60-89	90-149	150-199	200-299	300-400	401-600	601-899	900-1500	>1500
500	CE					280	380	500	650/800	950/1400	2000/3000
600	P7				180	280	360	600			
	C7				180						
	CE						400	460	650/800	1000/1500	2100/3400
	P6						380	600			
	CFD7			145	170	210/280	360				
	PFD7					210/280	360	600		1000/1500	2000
650	C7				190	225					
	CE						400		650	1000/1500	
	CFD2							420	660	950/1400	
	CFDA							420	660		
700	P7						360	600		900/1400	
	CE							600		950/1400	2000
800	P7					280	360	450/600	750	900/1200/1400	2000/2400 3300/4500
	C3									900/1300	2700
	C3A										2700
	CE									1000/1400	2800
900	C3									1200	
950	P7							450	750	1200	2000

ACTIVE & PREFERRED

For more details on the product, click on the part number or contact our product support.

D²PAK

		$R_{DS(on)}$ [mΩ]									
Voltage [V]	Series	0-59	60-89	90-149	150-199	200-299	300-400	401-600	601-899	900-1500	>1500
600	C7	40	60	99/120	180						
	P7	45	60/80	99/120	180	280	360				
	CPA			99	199	299					
	CFD7	40 55	70	90/105 125/145	170	210 280	360				
650	CFD7	41		90/110/125	155						
	C7	45	65	95/125	190	225					
	CFD2			110	150/190		310				
	CFDA			110	150/190		310		660		
	CFD7A	50	75*	99 /115/145*	190	230					
800	C3					290					
900	C3						340				

D²PAK 7-pin

		$R_{DS(on)}$ [mΩ]									
Voltage [V]	Series	0-59	60-89	90-149	150-199	200-299	300-400	401-600	601-899	900-1500	>1500
650	CFD7A	50	75	99 /115	145/190	230					

Double DPAK (DDPAK)

		$R_{DS(on)}$ [mΩ]									
Voltage [V]	Series	0-59	60-89	90-149	150-199	200-299	300-400	401-600	601-899	900-1500	>1500
600	CFD7	45/55	75	90/105/ 125/145	170						
	G7	50	80	102/125	150/190						

QDPAK TSC

		$R_{DS(on)}$ [mΩ]									
Voltage [V]	Series	0-59	60-89	90-149	150-199	200-299	300-400	401-600	601-899	900-1500	>1500
600	S7	10/22*/40*	65*								
	S7A	10/22*									

QDPAK BSC

		$R_{DS(on)}$ [mΩ]									
Voltage [V]	Series	0-59	60-89	90-149	150-199	200-299	300-400	401-600	601-899	900-1500	>1500
600	S7	10*/17*/40*									
	S7A	10*/17*/40*									

TO-220 FullPAK

		$R_{DS(on)}$ [mΩ]									
Voltage [V]	Series	0-59	60-89	90-149	150-199	200-299	300-400	401-600	601-899	900-1500	>1500
500	CE				190	280	380	500	800	950	
600	P7		60/80	99/120	160/180	280	360	600			
	C7		60	99/120	180						
	CE						400	460	650	1000/1500	
	CFD7			125	170	280	360				
	P6			99/125	160/190	230/280	380	600			
650	C7	45	65	95/125	190	225					
	CE						400		650	1000/1500	
	CFD2			110	150/190		310	420	660		
700	P7						360	450/600	750	900	
800	P7					280	360	450/600	750	900/1200/1400	
	C3					290		450	650	900/1300	2700
	CE						310	460	650	1000/1400	
900	C3						340	500	800	1000/1200	
950	P7							450	750	1200	

TO-220 FullPAK Narrow Lead

		$R_{DS(on)}$ [mΩ]									
Voltage [V]	Series	0-59	60-89	90-149	150-199	200-299	300-400	401-600	601-899	900-1500	>1500
500	CE							500			
600	CE								650/800		
	P7				180	280	360	600			
	PFD7			125		210/280	360				
650	CE								650		
700	P7						360	450/600	750	900	
800	P7					280	360	450			

ACTIVE & PREFERRED

*Coming soon

For more details on the product, click on the part number.

TO-Leadless

		$R_{DS(on)}$ group [mΩ]									
Voltage [V]	Series	0-59	60-89	90-149	150-199	200-299	300-400	401-600	601-899	900-1500	>1500
600	CFD7	35/45/55	75	90/105/ 125/145							
	G7	28/50	80	102/125	150						
	S7	22/40	65								
650	CFD7	40*	60*/80*	99*/125*	155*/190*						
	G7	33		105	195						

TO-220

		$R_{DS(on)}$ [mΩ]									
Voltage [V]	Series	0-59	60-89	90-149	150-199	200-299	300-400	401-600	601-899	900-1500	>1500
500	CE				190	280	380				
600	P7		60/80	99/120	160/180	280	360	600			
	C7	40	60	99/120	180						
	P6			99/125	160/190	280					
	CFD7		70	90/105/ 125/145	170	280	360				
	CPA			99							
	S7	22									
650	CFD7	41	60	90/110	155	190					
	C7	45	65	95/125	190	225					
	CFD2			110	150/190		310	420			
	CFDA	50		99/110/115	150/190		310		660		
	CFD7A	50/75*		99 /115 /145*	190						
800	P7					280	360	450/600	750	900/1200/1400	
	C3					290		450	650	900/1300	
900	C3						340		800	1000/1200	

TO-220 FullPAK Wide Creepage

		$R_{DS(on)}$ [mΩ]									
Voltage [V]	Series	0-59	60-89	90-149	150-199	200-299	300-400	401-600	601-899	900-1500	>1500
600	P7				180	280	360	600			
	CE				190	280	380	600			
700	CE							600		950	

ThinPAK 5x6

		$R_{DS(on)}$ [mΩ]									
Voltage [V]	Series	0-59	60-89	90-149	150-199	200-299	300-400	401-600	601-899	900-1500	>1500
600	P7							600	750	900/1200/1400	2000
	PFD7						360	600		1000/1500	
700	P7							600	750	900/1200/1400	2000

ThinPAK 8x8

		$R_{DS(on)}$ [mΩ]									
Voltage [V]	Series	0-59	60-89	90-149	150-199	200-299	300-400	401-600	601-899	900-1500	>1500
600	P7		65/85	105/125	185	285	365				
	C7		65	104/125	185						
	CFD7		60/75	95/115/140	160/185	225					
	P6				180	210					
650	CFD7		65*	95*/115*/130*	160*	200*					
	C7		70	99/130	195	230					
	CFD2				165	210	340				

ACTIVE & PREFERRED

*Coming soon

For more details on the product, click on the part number or contact our product support.

Nomenclature

Power MOSFETs (until 2005)

S P P 20 N 60 C 3

Company
S = Formerly Siemens

Device
P = Power MOSFET

Package type
A = TO-220 FullPAK
B = TO-263 (D^2PAK)
D = TO-252 (DPAK)
I = TO-262 (I^2PAK)
N = SOT-223
P = TO-220
U = TO-251 (IPAK)
W = TO-247
Z = TO-247 4-pin

Continuous drain current
(@ T_C = 25°C) [A]

Technology
N = N-channel transistors

Breakdown voltage
Divided by 10 (60x10 = 600 V)

Specifications
C3 = CoolMOS™ C3
S5 = CoolMOS™ S5

Power MOSFETs (from October 2015 onwards)

I P DD 80 R 190 P7 ☐

Company
I = Infineon

Device
P = Power MOSFET

Package type (max. 2 digits)
A = TO-220 FullPAK
B = TO-263 (D^2PAK)
C = Bare die
D = TO-252 (DPAK)
I = TO-262 (I^2PAK)
L = ThinPAK 8x8
N = SOT-223
P = TO-220
S = TO-251 (IPAK Short Lead)
U = TO-251 (IPAK Long Lead)
W = TO-247
Z = TO-247 4-pin
T = TO-Leadless
DD = TO-252 (Double DPAK)
AW = TO-220 (Wide Creepage)
AN = TO-220 (Narrow Lead)
LS = ThinPAK 5x6
LK = ThinPAK 5x6 Kelvin source
DQ = TO-252 (Quadruple DPAK)
SA = TO-251 (IPAK Short Lead with ISO Standoff)
ZA = TO-247 4-pin asymmetric

Breakdown voltage
Divided by 10 (80x10 = 800 V)

R = $R_{DS(on)}$
As a seperator between voltage und $R_{DS(on)}$

$R_{DS(on)}$ [mΩ]

Series name (2-4 digits)
In this case CoolMOS™ P7
(max. digits e.g. CFD7)

Reliability grade
blank = Industrial
A = Automotive
S = Standard

Automotive MOSFETs

I P P 60 R 099 C P A

Company
I = Infineon

Device
P = Power MOSFET

Package type
B = TO-263 (D^2PAK)
D = TO-252 (DPAK)
I = TO-262 (I^2PAK)
P = TO-220
W = TO-247
BE= TO-263 (D^2PAK 7-pin)
WS = TO-247 SL
DQ = QDPAK TSC
QC = QDPAK BSC

Breakdown voltage
Divided by 10 (60x10 = 600 V)

R = $R_{DS(on)}$

$R_{DS(on)}$ [mΩ]

Series name
CoolMOS™ CP, CoolMOS™ CFD, CoolMOS™ C3, CoolMOS™ CFD7, CoolMOS™ S7

Automotive

Infineon support for high voltage MOSFETs

Useful links and helpful information

Further information, datasheets and documents

infineon.com/coolmos
infineon.com/coolmos-latest-packages
infineon.com/coolmos-automotive
infineon.com/gan

Evaluationboards and simulation models

infineon.com/coolmos-boards
infineon.com/powermosfet-simulationmodels

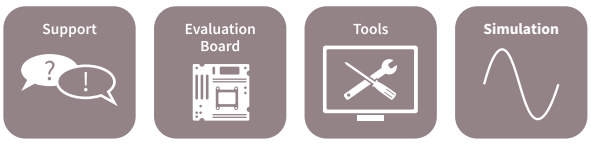

Wide bandgap semiconductors

- CoolGaN™ e-mode HEMTs
- CoolGaN™ 400 V e-mode GaN HEMT
- CoolGaN™ 600 V e-mode GaN HEMTs
- CoolGaN™ IPS half-bridge 600 V
- CoolGaN™ product portfolio
- Silicon carbide
- CoolSiC™ MOSFETs 650 V overview and portfolio
- CoolSiC™ MOSFETs 1200 V overview and portfolio
- CoolSiC™ MOSFETs 1700 V overview and portfolio
- CoolSiC™ Schottky diodes
- CoolSiC™ Schottky diodes 650 V
- CoolSiC™ Schottky diodes 1200 V
- CoolSiC™ diodes product portfolio
- CoolGaN™ and CoolSiC™ nomenclature

Wide bandgap semiconductors

Gallium nitride (GaN) and silicon carbide (SiC)

The key to the next essential step towards an energy-efficient world is the use of new materials, such as wide bandgap semiconductors that allow for greater power efficiency, smaller size, lighter weight, lower overall cost – or all of these together. As the leading and trusted power supplier, Infineon is offering the broadest product and technology portfolio of silicon (Si) and wide bandgap (WBG) solutions with more than 40 years of heritage in silicon, and several decades of heritage in wide bandgap technology development.

CoolGaN™ – ultimate efficiency and reliability

Compared to silicon (Si), the breakdown field of Infineon's CoolGaN™ enhancement mode (e-mode) HEMTs is ten times higher and the electron mobility is double. Both the output charge and gate charge are ten times lower than with Si and the reverse recovery charge is almost zero which is key to high-frequency operations. GaN is the best-suited technology in hard-switching as well as resonant topologies, and is enabling new approaches in current modulation. Infineon's GaN solution is based on the most robust and performing concept in the market – the enhancement-mode concept - offering fast turn-on and turn-off speed. CoolGaN™ products focus on high performance and robustness, and add significant value to a broad variety of systems across many applications such as server, telecom, hyperscale data centers, wireless charging, adapter/charger, and audio. CoolGaN™ switches are easy to design-in with the matching EiceDRIVER™ gate driver ICs optimized for CoolGaN™ 600 V from Infineon.

CoolSiC™ - revolution to rely on

Silicon carbide (SiC) has a wide bandgap of 3 electronvolts (eV) and a much higher thermal conductivity compared to silicon. SiC-based MOSFETs are best-suited for high-breakdown, high-power applications that operate at higher frequencies compared to traditional IGBTs. CoolSiC™ MOSFETs come along with a fast internal freewheeling diode, thus making hard commutation without additional diode chips possible. Due to its unipolar character, the MOSFETs show very low, temperature-independent switching and low conduction losses, especially under partial load conditions. Based on proven, high-quality volume manufacturing, Infineon's silicon carbide solutions combine revolutionary technology with benchmark reliability – for our customers' success today and tomorrow. The offering is completed by EiceDRIVER™ SiC MOSFET gate driver ICs based on Infineon's successful coreless transformer technology.

CoolGaN™ e-mode HEMTs

Tailor-made for the highest efficiency and power density in switch-mode power supplies

In comparison to the next best silicon alternative, CoolGaN™ enables higher power density and the highest efficiency, especially in the partial load range, through novel topologies such as the CCM totem-pole PFC stage. GaN e-mode HEMT performance features a low reverse recovery charge and excellent dynamic performance in reverse conduction compared to silicon FET solutions. This enables more efficient operation at established frequencies and much higher frequency operation, improving power density by shrinking the size of passive components. CoolGaN™ enables doubled output power in a given energy storage slot size, freeing up space and realizing higher efficiency at the same time. Infineon's CoolGaN™ comes with industry-leading reliability. During the quality management process, it is not only the device that is thoroughly tested but also its behavior in the application environment. The performance of CoolGaN™ goes beyond other GaN products in the market.

Features
- Low output charge and gate charge
- No reverse recovery charge

Design benefits
- High power density, small and light design
- High efficiency in resonant circuits
- New topologies and current modulation
- Fast and (near-)lossless switching

Advantages
- Operational expenses (OPEX) and capital expenditure (CAPEX) reduction
- BOM and overall cost savings

Infineon leverages its unique portfolio of high- and low-voltage MOSFETs, gate-driver ICs and digital controllers to complement its CoolGaN™ product line, thus enabling full exploit for GaN benefits.

The highest quality

The qualification of GaN switches requires a dedicated approach, well above existing silicon standards
- Infineon qualifies GaN devices well beyond industry standards
- Application profiles are an integral part of the qualification process
- Failure models, based on accelerated test conditions, ensure target lifetime and quality are met
- Infineon sets the next level of wide bandgap quality

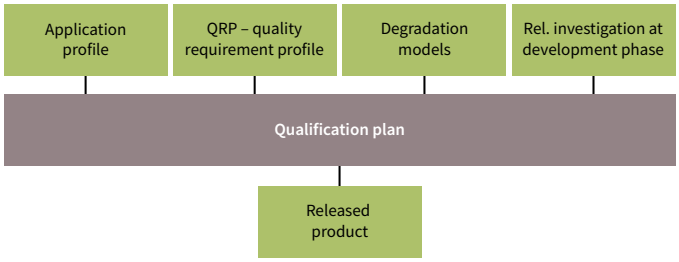

CoolGaN™ e-mode HEMTs overview

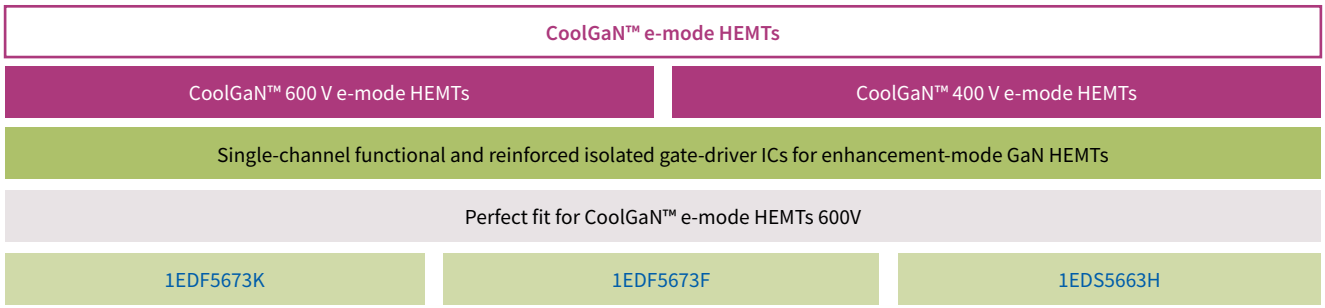

For more details on the product, click on the part number or contact our product support.

CoolGaN™ 400 V and 600 V e-mode GaN HEMTs – bringing GaN technology to the next level

Infineon's CoolGaN™ 400 V and 600 V e-mode HEMTs enable more than 98 percent system efficiency and help customers to make their end products smaller and lighter. Driving enhancement-mode devices requires some additional features when choosing the correct gate driver IC; however, CoolGaN™ technology does not require customized ICs. Infineon offers three new members of a single-channel galvanically isolated gate driver IC family. The EiceDRIVER™ 1EDx56x3x family is a perfect fit for e-mode GaN HEMTs with non-isolated gate (diode input characteristic) and low threshold voltage, such as CoolGaN™.

Complete support of all requirements specific to e-mode GaN HEMTs operation:

- Low driving impedance (on-resistance 0.85 Ω source, 0.35 Ω sink)
- Resistor programmable gate current for steady on-state (typically 10 mA)
- Programmable negative gate voltage to completely avoid spurious turn-on in half-bridges

Block diagram: high-efficiency GaN switched-mode power supply (SMPS)

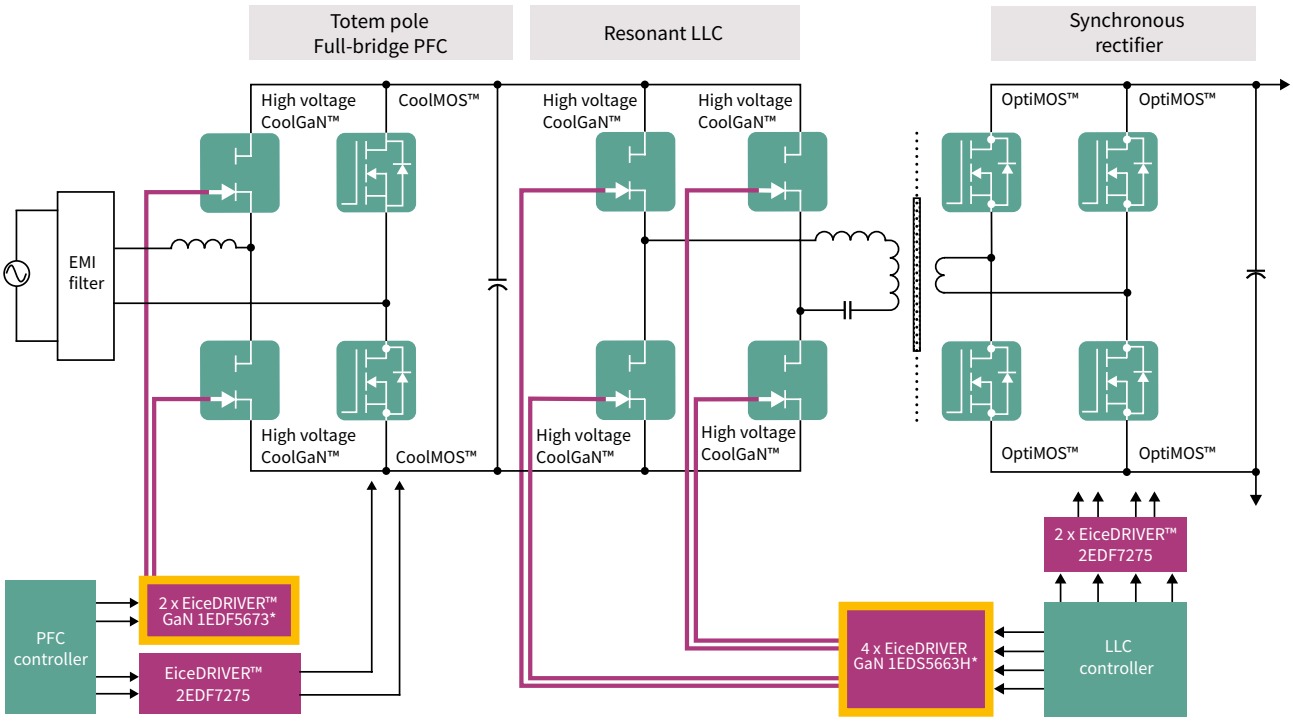

*EiceDRIVER™ GaN ICs are single-channel products

CoolGaN™ 400 V e-mode GaN HEMT

Class D output stage offering the best audio experience

CoolGaN™ 400 V enables smoother switching and more linear class D output stage by offering low/linear C_{oss}, zero Q_{rr}, and normally-off switch. Ideal class D audio amplifiers offer 0 percent distortion and 100 percent efficiency. What impairs the linearity and power loss is highly dependent on the switching characteristics of the switching device. Infineon's CoolGaN™ 400 V breaks through the technology barrier by introducing zero reverse recovery charge in the body diode and very small, linear input and output capacitances.

In addition, the e-mode concept offers fast turn-on and turn-off speed. This feature also simplifies pairing CoolGaN™ with the IRS20957SPBF class D controller and therefore enables faster go-to-market.

CoolGaN™ for class D audio solutions

CoolGaN™ 400 V is tailored for premium HiFi home audio, professional, and aftermarket car audio systems where end-users demand every detail of their high-resolution soundtracks. These have been conventionally addressed by bulky linear amplifiers or tube amplifiers. With CoolGaN™ 400 V as the class D output stage, audio designers will be able to deliver the best audio experience to their prospective audio fans.

The IGT40R070D1, CoolGaN™ 400V device in HSOF-8-3 (TO-leadless) package has been tested in class D audio amplifier applications on 200 W + 200 W dual-channel system designs.

Features and benefits

Key features	Key benefits
› Ultralow and linear C_{oss} 400 V power devices	› Clean switching performance
› Zero Q_{rr}	› Narrow dead time for better THD
› E-mode transistor – normally-off switch	› Easy to use: compatible with the IRS20957SPBF class D audio control IC

The CoolGaN™ 400 V devices benefit from Infineon's engineering expertise towards challenging applications, such as telecom rectifiers and SMPS servers, where CoolGaN™ technology proved to be highly reliable. It is the most robust and performing concept in the market. The CoolGaN™ 400 V portfolio is built around class D audio requirements, with high-performing SMD packages to fully exploit the benefits of GaN technology.

For more details on the product, click on the part number or contact our product support.

CoolGaN™ 600 V e-mode GaN HEMTs

The highest efficiency and power density with reduced system costs

The e-mode concept offers fast turn-on and turn-off speed, as well as a better path towards integration. CoolGaN™ 600 V e-mode HEMTs enable simpler and more cost-effective half-bridge topologies. As e-mode based products reach maturity, CoolGaN™ 600 V HEMTs are gaining growing prominence thanks to their potential. The CoolGaN™ 600 V series is manufactured according to a specific, GaN-tailored qualification process which goes far beyond the standards for silicon power devices. CoolGaN™ 600 V is designed for datacom and server SMPS, telecom rectifiers, as well as mobile chargers and adapters, and can be used as a general switch in many other industrial and consumer applications. It is the most rugged and reliable solution in the market. The CoolGaN™ portfolio is built around high-performing SMD packages to fully exploit the benefits of GaN.

CoolGaN™ for PFC

CoolGaN™ enables the adoption of simpler half-bridge topologies (including the elimination of the lossy input bridge rectifier). The result is record efficiency (>99%) with a potential for BOM savings.

CoolGaN™ for resonant topologies

- In resonant applications, ten times lower Q_{oss} and Q_G enables high-frequency operations (>1 MHz) at the highest efficiency levels
- Linear output capacitance leads to 8 to 10 times lower dead time
- Devices can be easily paralleled
- Power density can be pushed even further by optimizing the thermal performance
- CoolGaN™ enables to push the efficiency forward, thus enabling high power density e.g., in low-power chargers/adapters

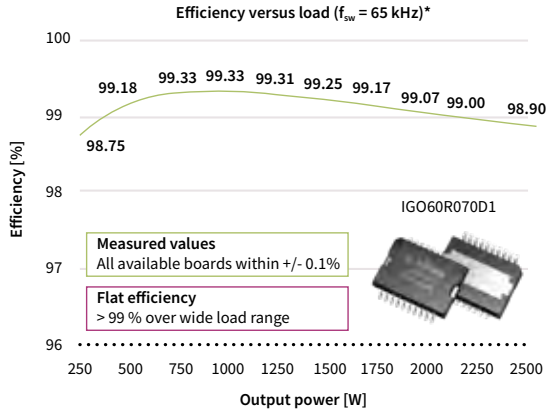

* No external power supplies – everything included.
V_{in} = 230 V_{AC}, V_{out} = 390 V_{DC}, $t_{ambient}$ = 25 °C

Applications

- Telecom
- Server
- Datacom
- Adapter and charger
- Wireless charging
- SMPS

Full-bridge totem pole

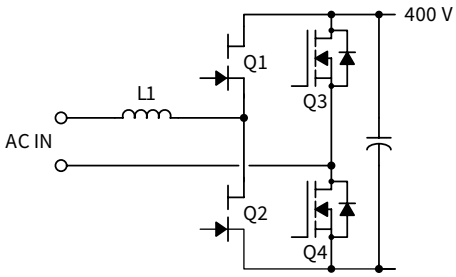

Demonstration board

2.5 kW totem-pole PFC board:
EVAL_2500W_PFC_GAN_A

- 2 x 70 mΩ CoolGaN™ in DSO-20-85
- 2 x 33 mΩ CoolMOS™

CoolGaN™ IPS half-bridge 600 V

Ease of use with integrated drivers for highest efficiency and power density

The IGI60F1414A1L device combines a half-bridge power stage consisting of two 140 mΩ (typ. $R_{DS(on)}$)/ CoolGaN™ 600 V e-mode switches together with the dedicated gate drivers in one thermally enhanced 8 x 8 mm QFN-28 package. It is thus ideally suited to support the design of compact appliances in the low-to-medium power area.
Infineon's CoolGaN™ and related power switches provide a very robust gate structure. When driven by a continuous gate current of a few mA in the on-state, a minimum on-resistance $R_{DS(on)}$ is always guaranteed, independent of temperature and parameter variations.

Due to the GaN-specific low threshold voltage and the fast switching transients, a negative-gate drive voltage is required in certain applications to avoid spurious turn-on effects. This can be achieved by the well-known RC interface between the driver and the switch. A few external SMD resistors and capacitors would enable easy adaptation to different applications (low/medium power, hard/soft switching).

The built-in driver utilizes an on-chip coreless transformer (CT) technology to achieve level-shifting to the high side. Besides, CT guarantees excellent robustness even for extremely fast switching transients above 150 V/ns.

Features and benefits

Key features	Key benefits
› Digital-in, power-out building block	› Easy to drive with 2x digital PWM input
› Application configurable switching behavior	› Low system BOM
› Highly accurate and stable timing	› Configurability of gate path with low inductance loop on PCB
› Thermally enhanced 8 x 8 mm QFN-28 package	› Allows short dead-time setting in order to maximize system efficiency
	› Small package for compact system designs

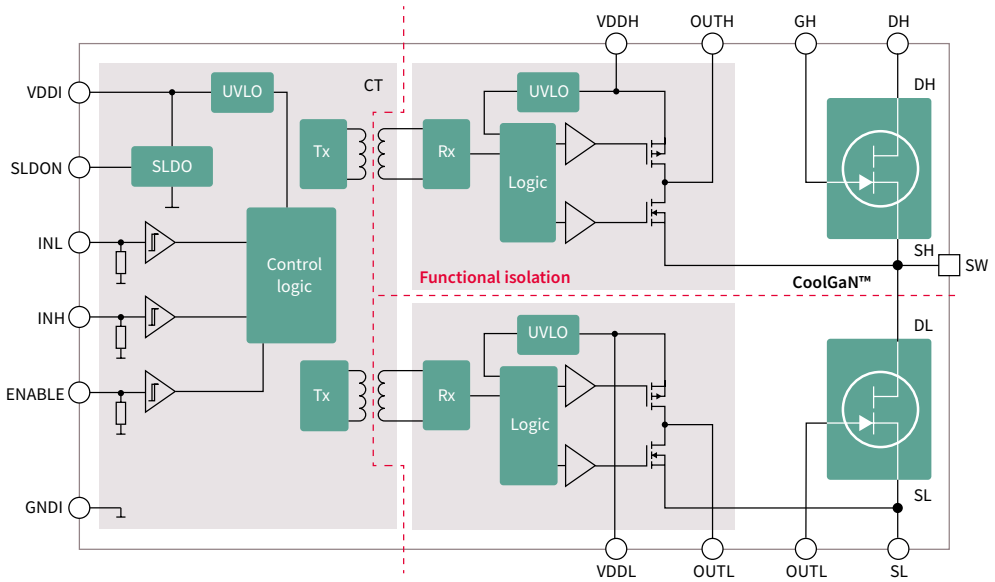

CoolGaN™ 400 V e-mode GaN HEMTs

Package	HSOF-8-3 (TO-Leadless)
$R_{DS(on)\ max.}$ \ P_{max}	up to 200 W
70 mΩ	IGT40R070D1

CoolGaN™ 600 V e-mode GaN HEMTs

Package / $R_{DS(on)}$	DSO-20-85 Bottom-side cooling	DSO-20-87 Top-side cooling	HSOF-8-3 TO-Leadless	LSON-8-1 DFN 8x8
42 mΩ	IGO60R042D1 *	IGOT60R042D1 *	IGT60R042D1 *	
70 mΩ	IGO60R070D1	IGOT60R070D1	IGT60R070D1	IGLD60R070D1
190 mΩ			IGT60R190D1S	IGLD60R190D1

Infineon's CoolGaN™ devices, driven by single-channel isolated gate driver ICs from the EiceDRIVER™ GaN family, aim to unlock the full potential of GaN technology.

EiceDRIVER™family optimized for CoolGaN™ 600 V product portfolio

Product	Package	Input to output isolation				Propagation delay accuracy	Typ. high level (sourcing) output resistance	Typ. low level (sinking) output resitance	SP number
		Isolation class	Rating	Surge testing	Certification				
1EDF5673K	LGA, 13-pin, 5x5 mm	functional	V_{IO} = 1.5 kV_{DC}	n.a.	n.a.	-6 ns/+7ns	0.85 Ω	0.35 Ω	SP002447622
1EDF5673F	DSO, 16-pin, 150 mil	functional	V_{IO} = 1.5 kV_{DC}	n.a.	n.a.	-6 ns/+7ns	0.85 Ω	0.35 Ω	SP003194020
1EDS5663H	DSO, 16-pin, 300 mil	reinforced	V_{IOTM} = 8 kV_{pk} V_{ISO} = 5.7 kV_{rms}	V_{ISOM} > 10 kV_{pk}	VDE0884-10 UL1577	-6 ns/+7ns	0.85 Ω	0.35 Ω	SP002753980

CoolGaN™ IPS half-bridge 600 V

Package / $R_{DS(on)}$	PG-TIQFN-28-1 (8x8)
140 mΩ	IGI60F1414A1L*

* Coming soon

For more details on the product, click on the part number or contact our product support.

Silicon carbide

Revolution to rely on

Silicon carbide (SiC) devices belong to the so-called wide bandgap semiconductor group, which offers a number of attractive characteristics for high voltage power semiconductors when compared to commonly used silicon (Si). In particular, the much higher breakdown field strength and thermal conductivity of silicon carbide allow developing devices which by far outperform the corresponding silicon-based ones, and enable efficiency levels unattainable otherwise. Infineon's portfolio of SiC devices covers 600 V to 1200 V Schottky diodes as well as the revolutionary CoolSiC™ MOSFETs 650 V, 1200 V and 1700 V.

EiceDRIVER™ SiC MOSFET gate-driver ICs are well-suited to drive SiC MOSFETs, especially Infineon's ultra-fast switching CoolSiC™ SiC MOSFETs. These gate drivers incorporate most important key features and parameters for SiC driving such as tight propagation delay matching, precise input filters, wide output-side supply range, negative gate voltage capability, active Miller clamp, DESAT protection, and extended CMTI capability.

CoolSiC™ silicon carbide MOSFETs 650 V

Delivering reliable and cost-effective top performance

Silicon carbide physical characteristics, from wide bandgap to electron mobility and thermal conductivity, provide the basis to engineer high-performance semiconductor technologies and products. The CoolSiC™ MOSFETs from Infineon maximize the advantages of silicon carbide, offering a high-performance product that also meets power electronics design requirements, like reliability and ease of use. As per performance, the CoolSiC™ MOSFETs show low $R_{DS(on)}$ dependency with temperature and low switching losses. The reliability is built on technological strengths and on flawless quality processes. Some aspects of Infineon's SiC technology, like superior gate oxide reliability, excellent thermal behavior, advanced avalanche ruggedness and short circuit capabilities, contribute to the robustness of the device. Infineon's benchmark quality was further improved for silicon carbide, with an application-focused qualification scope exceeding standards, complemented by SiC-specific screening measures. Additional unique features, like 0 V turn-off V_{GS}, wide V_{GS} range, and the use of silicon MOSFET drivers and driving schemas make CoolSiC™ MOSFETs 650 V easy to integrate and use.

Leveraging SiC's material properties

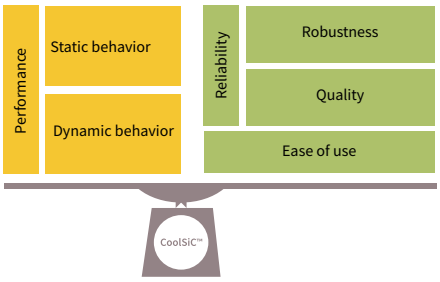

Robustness for continuous hard commutation topologies

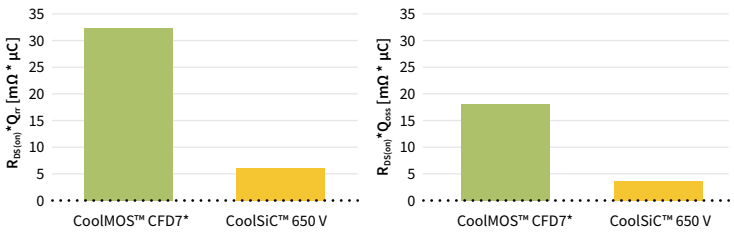

* Best CoolMOS™ SJ MOSFET reference in the market

CoolSiC™ MOSFETs can enable streamlined and cost-optimized system designs with fewer components, weight and size, reaching high energy efficiency and power density. For instance, the CoolSiC™ MOSFETs boast a low level of Q_{rr}, roughly 80% less of the best CoolMOS™ reference in the market, the CoolMOS™ CFD7. This ensures the robustness of the body diode, making the CoolSiC™ MOSFETs suitable for topologies with continuous hard commutation, like the high-efficiency totem-pole PFC, a topology that enables > 99% of efficiency.

High-efficiency CoolSiC™ totem-pole PFC in server SMPS (switched-mode power supply)

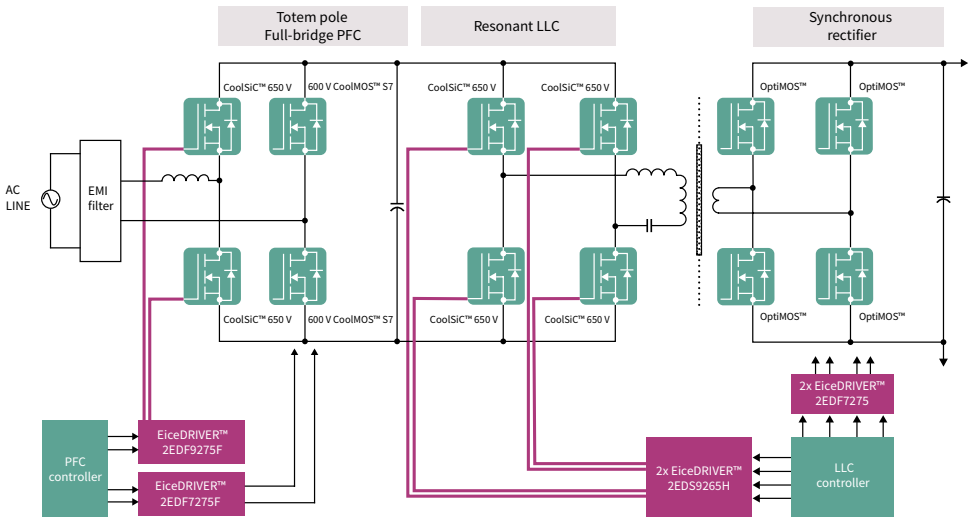

For more details on the product, click on the part number or contact our product support.

CoolSiC™ MOSFET 650 V ACTIVE & PREFERRED

$R_{DS(on)}$ max. [mΩ]	$R_{DS(on)}$ typ. [mΩ]	TO-247 4-pin	TO-247
34	27	IMZA65R027M1H	IMW65R027M1H
42	30	IMZA65R030M1H*	IMW65R030M1H*
50	39	IMZA65R039M1H*	IMW65R039M1H*
64	48	IMZA65R048M1H	IMW65R048M1H
74	57	IMZA65R057M1H*	IMW65R057M1H*
94	72	IMZA65R072M1H	IMW65R072M1H
111	83	IMZA65R083M1H*	IMW65R083M1H*
142	107	IMZA65R107M1H	IMW65R107M1H

* Coming soon

For more details on the product, click on the part number or contact our product support.

CoolSiC™ silicon carbide MOSFETs 1200 V

Infineon's CoolSiC™ technology enables radically new product designs

Silicon carbide (SiC) opens up new degrees of freedom for designers to harness unseen levels of efficiency and system flexibility. In comparison to traditional silicon-based switches like IGBTs and MOSFETs, the SiC MOSFET offers a series of advantages. These include the low switching losses with 1200 V and 650 V switches, very low reverse recovery losses of the internal commutation proof body diode, temperature-independent low switching losses, and threshold-free on-state characteristics. Based on volume experience and compatibility know-how, Infineon introduces the revolutionary SiC technology which enables radically new product designs with high performance and high reliability. CoolSiC™ MOSFET products are targeted for automotive, photovoltaic inverters, battery charging, EV charging, industrial drives, UPS, SMPS, and energy storage.

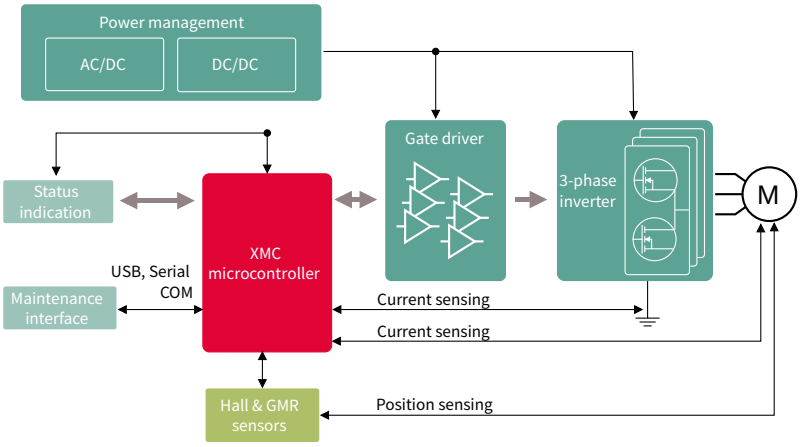

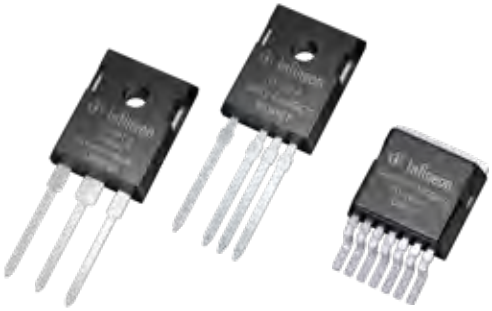

Features and benefits

Key features	Key benefits
Very low switching losses	Best-in-class system performance
Superior gate-oxide reliability	Efficiency improvement and reduced cooling effort
Threshold-free on-state characteristic	Longer lifetime and higher reliability
Wide gate-source voltage range	Enables higher frequency operation, allowing the increase in power density
Benchmark gate threshold voltage, $V_{GS(th)}$ = 4.5 V	Reduction in system cost
Fully controllable dV/dt	Ease of use
Commutation robust body diode, ready for synchronous rectification	

TO-247 4-pin package contains an additional connection to the source (Kelvin connection) that is used as a reference potential for the gate driving voltage, thereby eliminating the effect of voltage drops over the source inductance. The result is even lower switching losses than for the TO-247 3-pin version, especially at higher currents and higher switching frequencies.

The gate-source pin of the TO-263 7-pin package, similar as of the TO-247 4-pin, eliminates the effect of voltage drops over the source inductance, therefore further reduce the turn-on switching loss. TO-263 7-pin package minimizes the leakage inductance between drain and source, reduce the risk of high turn-off voltage overshoot.

CoolSiC™ MOSFET 1200 V ACTIVE & PREFERRED

Package / $R_{DS(on)}$	TO-247	TO-247-4	D2PAK 7-pin	Gate driver for CoolSiC™	
30 mΩ	IMW120R030M1H	IMZ120R030M1H	IMBG120R030M1H	**EiceDRIVER™ Compact:** 1EDI20I12MF 1EDI60I12AF 1ED3124MU12F 1ED3125MU12F 1ED3122MC12H 1ED3124MC12H	**EiceDRIVER™ Enhanced:** 1ED3491MC12M 1ED3890MC12M 1ED020I12-F2 2ED020I12-F2
45 mΩ	IMW120R045M1 – lead product	IMZ120R045M1– lead product	IMBG120R045M1H		
60 mΩ	IMW120R060M1H	IMZ120R060M1H	IMBG120R060M1H		
90 mΩ	IMW120R090M1H	IMZ120R090M1H	IMBG120R090M1H		
140 mΩ	IMW120R140M1H	IMZ120R140M1H	IMBG120R140M1H		
220 mΩ	IMW120R220M1H	IMZ120R220M1H	IMBG120R220M1H		
350 mΩ	IMW120R350M1H	IMZ120R350M1H	IMBG120R350M1H		

CoolSiC™ silicon carbide MOSFETs 1700 V

CoolSiC™ MOSFET 1700 V SMD enables best efficiency and reduced complexity for high voltage auxiliary power supplies

The CoolSiC™ 1700 V MOSFET in a TO-263-7 high-creepage package is optimized for fly-back topologies to be used in auxiliary power supplies connected to DC-link voltages 600 V up to 1000 V in numerous power applications.

Features and benefits

Key features	Key benefits
› Optimized for fly-back topologies	› The CoolSiC™ 1700 V MOSFET enables simple single-ended fly-back topology at high efficiency level for use in auxiliary power supplies
› Extremely low switching loss	› SMD package enables direct integration into PCB, with natural convection cooling without extra heatsink
› 12 V/0 V gate source voltage compatible with fly-back controllers	› Reduced isolation efforts due to extended creepage and clearance distance of package
› Fully controllable dV/dt for EMI optimization	› Reduced system complexity
› SMD package with enhanced creepage and clearance distances, >7 mm	› High power density

CoolSiC™ MOSFET 1700 V ACTIVE & PREFERRED

Package / $R_{DS(on)}$	D^2PAK 7-pin
450 mΩ	IMBF170R450M1
650 mΩ	IMBF170R650M1
1000 mΩ	IMBF170R1K0M1

For more details on the product, click on the part number or contact our product support.

CoolSiC™ Schottky diodes

The differences in material properties between silicon carbide and silicon limit the fabrication of practical silicon unipolar diodes (Schottky diodes) to a range up to 100-150 V, with a relatively high on-state resistance and leakage current. In SiC, Schottky diodes can reach a much higher breakdown voltage. Infineon is the world's first SiC discrete power supplier. Infineon offers products up to 1200 V in discrete packages and up to 1700 V in modules.

The long market presence and experience enable Infineon to deliver highly reliable, industry-leading SiC performance. With over ten years of pioneering experience in developing and manufacturing SiC diodes, Infineon's latest CoolSiC™ Schottky diode generation 6 family sets a benchmark in quality, efficiency and reliability.

Features

- No reverse recovery charge
- Purely capacitive switching
- High operating temperature ($T_{j, max}$ 175°C)

Advantages

- Low turn-off losses
- Reduction of CoolMOS™ or IGBT turn-on loss
- Switching losses independent from load current, switching speed and temperature

Benefits

- System efficiency improvement compared to Si diodes
- Reduced cooling requirements
- Enabling higher frequency/increased power density
- Higher system reliability due to lower operating temperature
- Reduced EMI

Applications

- Server
- Telecom
- Solar
- UPS
- EV charging
- Energy storage
- PC power
- Motor drives
- Lighting
- CAV

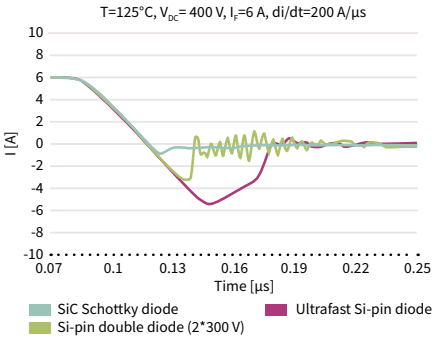

Reverse-recovery charge of SiC Schottky diodes versus Si-pin diodes
The majority of carrier characteristics imply no reverse recovery charge and the only contribution to the switching losses comes from the tiny displacement charge of capacitive nature. In the same voltage range, silicon devices have a bipolar component resulting in much higher switching losses. The graph shows the comparison between various 600 V devices.

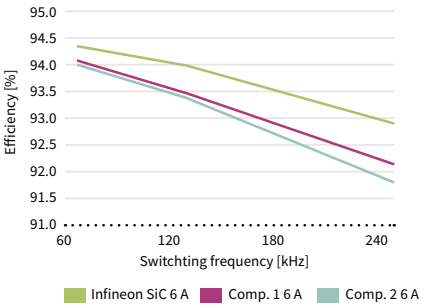

Improved system efficiency (PFC in CCM mode operation, full load, low line)
The fast switching characteristics of the SiC diodes provide clear efficiency improvements at a system level. The performance gap between SiC and high-end silicon devices increases with the operating frequency.

For more details on the product, click on the part number or contact our product support.

CoolSiC™ Schottky diodes 650 V

CoolSiC™ Schottky diodes 650 V G6 and G5

The new CoolSiC™ Schottky diode 650 V G6 product family is built over the strong characteristics of the previous G5 generation, fully leveraging technology and process innovation to propose the best efficiency and zero price/performance products to date.

Foundation technology – CoolSiC™ Schottky diodes 650 V G5

The established CoolSiC™ Schottky diodes G5 product family has been optimized after all key aspects including junction structure, substrate and die attach. It represents a well-balanced product family which offers state-of-the-art performance and high surge current capability at a competitive cost level.

Innovation: optimized junction, substrate and die attach

Infineon's SiC Schottky diode generation 5 is optimized with regard to all key aspects relevant for high-power and high-efficiency SMPS applications.

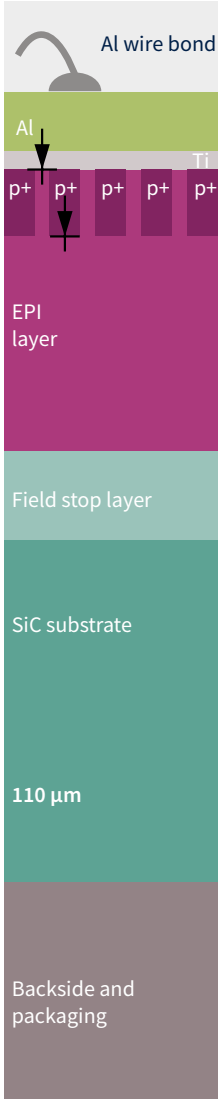

Junction: merged PN structure

On the junction level, it has an optimized merged PN structure. Compared to competitors, Infineon's SiC diode has an additional P-doped area, which, together with the N-doped EPI layer, forms a PN junction diode. Thus, it is a combination of Schottky diode and PN junction diode. Under normal conditions it works like a standard Schottky diode. Under abnormal conditions such as lighting, AC line drop-out, it works like a PN junction diode. At high current level, the PN junction diode has a significantly lower forward voltage (V_F) than the Schottky diode, which leads to less power dissipation, thus significantly improving the surge current capability.

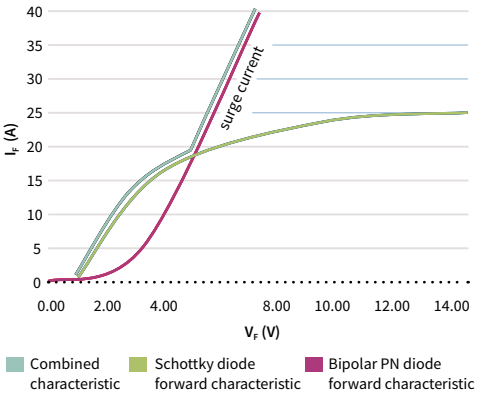

Substrate: thin wafer technology

On the substrate level, Infineon introduced the thin wafer technology. At the later stage of our SiC diode production, the thin wafer process is used to reduce the wafer thickness by about two-thirds, which significantly reduces the substrate resistance contribution, thus, improving both forward voltage (V_F) and thermal performance.

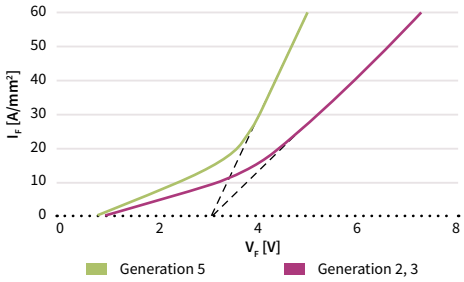

Die attach: diffusion soldering

On the backside, package level diffusion soldering is introduced, which significantly improves the thermal path between the lead frame and the diode, enhancing the thermal performance. With the same chip size and power dissipation, the junction temperature is reduced by 30°C.

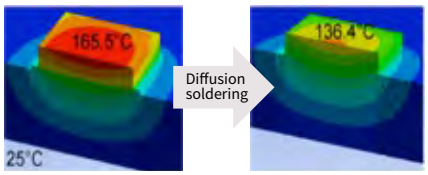

R_{thJC}=2.0 K/W R_{thJC}=1.5 K/W

Latest development - CoolSiC™ Schottky diodes 650 V G6

The CoolSiC™ Schottky diodes G6 product family introduces a novel and proprietary Schottky metal system. This contributes to reducing the forward voltage (VF) to challenging levels, determining a measurable decrease of conduction losses. Infineon's CoolSiC™ Schottky diodes enable optimum efficiency and ruggedness. Lower forward voltage (V_F) means lower conduction loss, and lower capacitive charge (Q_c) means lower switching loss. Q_c x V_F is the figure of merit for efficiency, and comparison indicates that the latest generation 6 products have the lowest Q_c x V_F on the market. Infineon's CoolSiC™ Schottky diodes offer a surge current robustness far better than the one offered by the most efficient products. Thus, under abnormal conditions, this surge current capability offers excellent device robustness.

Efficiency comparison

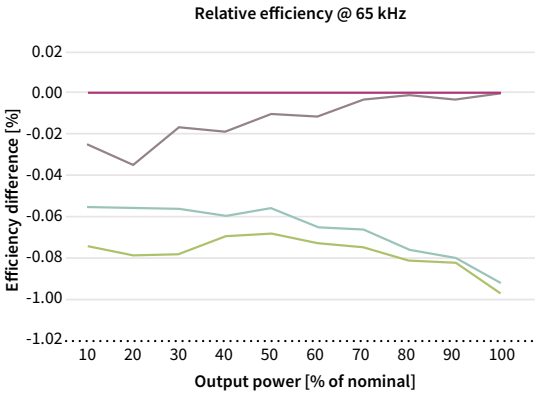

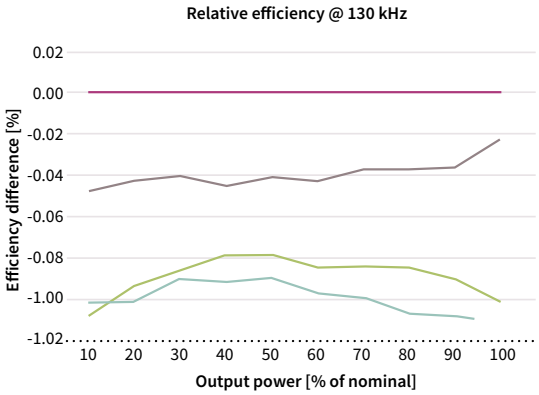

In terms of efficiency, the 8 A G6 device has been tested in CCM PFC. The maximum output power is 3.5 kW. The left figure shows the relative efficiency at 65 kHz, while the figure on the right shows the relative efficiency at 130 kHz. This shows that Infineon's CoolSiC™ Schottky diode G6 delivers better efficiency over the full load range, keeping this advantage even at 130 kHz, therefore meeting the needs of designers who want to increase the switching frequencies in their designs to attain more power density.

The best price performance

CoolSiC™ Schottky diodes G6 are the outcome of Infineon's continuous technological and process improvements, which enable the design and development of SiC-based products, making them more price-competitive and increasing performance across generations. As a result, G6 is Infineon's best price/performance CoolSiC™ Schottky diode generation, offering the highest cost-efficiency. In addition, Infineon offers the reliability of collaborating with the industry leader. Customers can leverage Infineon's proven quality and supply chain reliability. They can benefit from "one-stop-shop" advantages and maximize system performance, combining CoolSiC™ Schottky diodes with the SJ MOSFETs of the CoolMOS™ 7 family, such as 600 V C7, 650 V C7, 600 V G7, 650 V G7 and 600 V P7.

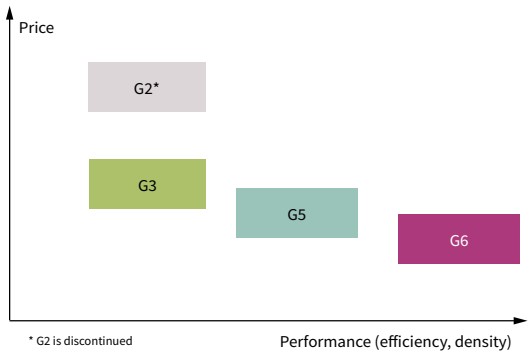

A comprehensive portfolio

The combined G6 and G5 CoolSiC™ Schottky diode 650 V diode portfolio offers a wide choice of packages and ampere class granularity to allow the best fit to applications. G6 comes in double DPAK, the first top-side cooled surface mount package, which allows thermal decoupling of PCB to chip junction and enables higher power dissipation and improved system lifetime thanks to the reduced board temperature.

CoolSiC™ Schottky diodes 1200 V

A new level of system efficiency and reliability

By using hybrid Si power switch/SiC diode sets, industrial application designers will gain flexibility for system optimization compared to purely silicon-based solutions. SiC diodes enable system improvements such as higher output power, greater efficiency or higher switching frequency. By implementing CoolSiC™ diodes generation 5, for example, in Vienna rectifier topology, in combination with Infineon's 650 V TRENCHSTOP™ IGBTs and 650 V CoolMOS™ MOSFETs, designers can achieve outstanding system-level performance and reliability.

One of the most commonly used topologies for EV DC charging

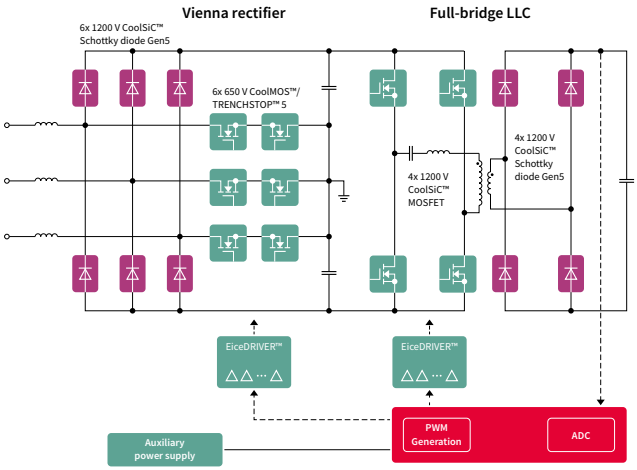

Features and benefits

Key features	Key benefits
› Zero Q_{rr} leading to no reverse recovery losses	› System efficiency improvement over Si-based diodes
› High surge current capability up to fourteen times of the nominal current	› Enabling higher frequency/increased power density solutions
› Tight forward voltage distribution	› High system reliability by extended surge current
› Temperature-independent switching behavior	› Reduced cooling requirements through lower diode losses and lower case temperatures
› Low forward voltage (V_F = 1.4 V) even at high operating temperature	› System size/cost saving due to reduced heatsink requirements and smaller magnetics
› Available in both through-hole and SMD packages	
› Up to 40 A rated diode	

650 V Si IGBT/Si SJ MOSFET and 1200 V SiC diode/ultrafast Si diode in a Vienna rectifier topology, f_{sw}=48 kHz

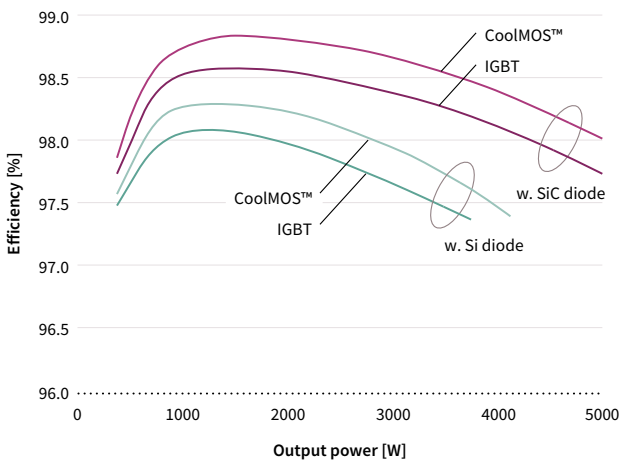

650 V SJ MOSFET + 1200 V SiC diode (IPW65R045C7 + IDW15G120C5B)

650 V IGBT + 1200 V SiC diode (IKW50N65EH5 + IDW15G120C5B)

650 V SJ MOSFET + 1200 V Si diode (IPW65R045C7 + Vendor A)

650 V IGBT + 1200 V Si diode (IKW50N65EH5 + Vendor A)

SiC vs. Si diode

- +0.8% higher efficiency
- Increased output power is possible

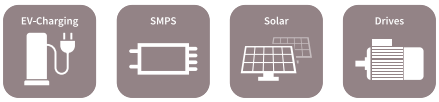

CoolSiC™ Schottky diodes 650 V G6 ACTIVE & PREFERRED

I_F [A]	TO-220 R2L	Double DPAK
4	IDH04G65C6	IDDD04G65C6
6	IDH06G65C6	IDDD06G65C6
8	IDH08G65C6	IDDD08G65C6
10	IDH10G65C6	IDDD10G65C6
12	IDH12G65C6	IDDD12G65C6 *
16	IDH16G65C6	IDDD16G65C6
20	IDH20G65C6	IDDD20G65C6

CoolSiC™ Schottky diodes 650 V G5 ACTIVE

I_F [A]	TO-220 R2L	TO-247 Dual Die	TO-247	D^2PAK R2L	ThinPAK 8x8
2	IDH02G65C5			IDK02G65C5	IDL02G65C5
3	IDH03G65C5			IDK03G65C5	
4	IDH04G65C5			IDK04G65C5	IDL04G65C5
5	IDH05G65C5			IDK05G65C5	
6	IDH06G65C5			IDK06G65C5	IDL06G65C5
8	IDH08G65C5			IDK08G65C5	IDL08G65C5
9	IDH09G65C5			IDK09G65C5	
10	IDH10G65C5		IDW10G65C5	IDK10G65C5	IDL10G65C5
12	IDH12G65C5		IDW12G65C5	IDK12G65C5	IDL12G65C5
16	IDH16G65C5		IDW16G65C5		
20	IDH20G65C5	IDW20G65C5B	IDW20G65C5		
24		IDW24G65C5B			
30/32		IDW32G65C5B	IDW30G65C5		
40		IDW40G65C5B	IDW40G65C5		

*For more information on the product, contact our product support

„B“ in product name refers to dual die with the common-cathode configuration.

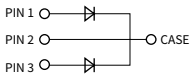

For more details on the product, click on the part number or contact our product support.

CoolSiC™ Schottky diodes 600 V G3 ACTIVE

I_F [A]	TO-220 R2L	DPAK R2L
3	IDH03SG60C	IDD03SG60C
4	IDH04SG60C	IDD04SG60C
5	IDH05SG60C	IDD05SG60C
6	IDH06SG60C	IDD06SG60C
8	IDH08SG60C	IDD08SG60C
9	IDH09SG60C	IDD09SG60C
10	IDH10SG60C	IDD10SG60C
12	IDH12SG60C	IDD12SG60C *

CoolSiC™ Schottky diodes 1200 V G5 ACTIVE & PREFERRED

I_F [A]	TO-220 R2L	TO-247 Dual Die	TO-247 R2L	DPAK R2L	D^2PAK R2L
2	IDH02G120C5			IDM02G120C5	IDK02G120C5
5	IDH05G120C5			IDM05G120C5	IDK05G120C5
8	IDH08G120C5			IDM08G120C5	IDK08G120C5
10	IDH10G120C5	IDW10G120C5B	IDWD10G120C5	IDM10G120C5	IDK10G120C5
15/16	IDH16G120C5	IDW15G120C5B	IDWD15G120C5		IDK16G120C5
20	IDH20G120C5	IDW20G120C5B	IDWD20G120C5		IDK20G120C5
30		IDW30G120C5B	IDWD30G120C5		
40		IDW40G120C5B	IDWD40G120C5		

*For more information on the product, contact our product support

„B“ in product name refers to dual die with the common-cathode configuration.

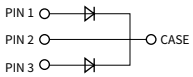

For more details on the product, click on the part number or contact our product support.

Nomenclature

CoolGaN™

I G W 60 R 070 D 1 ☐

Company
I = Infineon

Device
G = GaN

Package Type
LD = DFN 8 x 8-LSON
T= TOLL
O= DSO20-BSC
OT= DSO20-TSC
I= IQFN 8x8

Voltage
Divided by 10
60= 600 V

Reliability grade
blank = Industrial
A = Automotive
S = Standard

Generation
1 = 1st generation

Product type
D = Discrete
S = System

$R_{DS(on)}$ [mΩ]

R = $R_{DS(on)}$
As a separator between voltage und $R_{DS(on)}$

CoolGaN™ IPS

I G I 60 F 1414 A 1 L

Company
I = Infineon

G = GaN

I= Integrated

Breakdown voltage
Divided by 10
60= 600 V

Isolation
F = Functional isolation
N = Non-isolated

Package (form-factor)
L = 8x8 QFN
M = 6x8 QFN

Family code
1 = IPS with standard driver

Reliability grade
A = Automotive
S = Standard
(ongoing)

$R_{DS(on)}$ typ. [mΩ]
High-side Low-side
Divided by 10
14 = 140 mΩ / 140 mΩ

CoolSiC™ MOSFET nomenclature

I M W 65 R 45 M1 H

Company
I = Infineon

Device
M = MOSFET

Package Type
W = TO-247
Z = TO-247 4-pin
BG = D²PAK 7-pin
BF = D²PAK 7-pin (ext. creepage)

Breakdown voltage
Divided by 10
65 = 650 V
120 = 1200 V
170 = 1700 V

H = High gate voltage range

Series name
M1 = Generation 1

$R_{DS(on)}$ [mΩ]

R = $R_{DS(on)}$
As a separator between voltage und $R_{DS(on)}$

Nomenclature

CoolSiC™ Schottky diodes G2 and G3

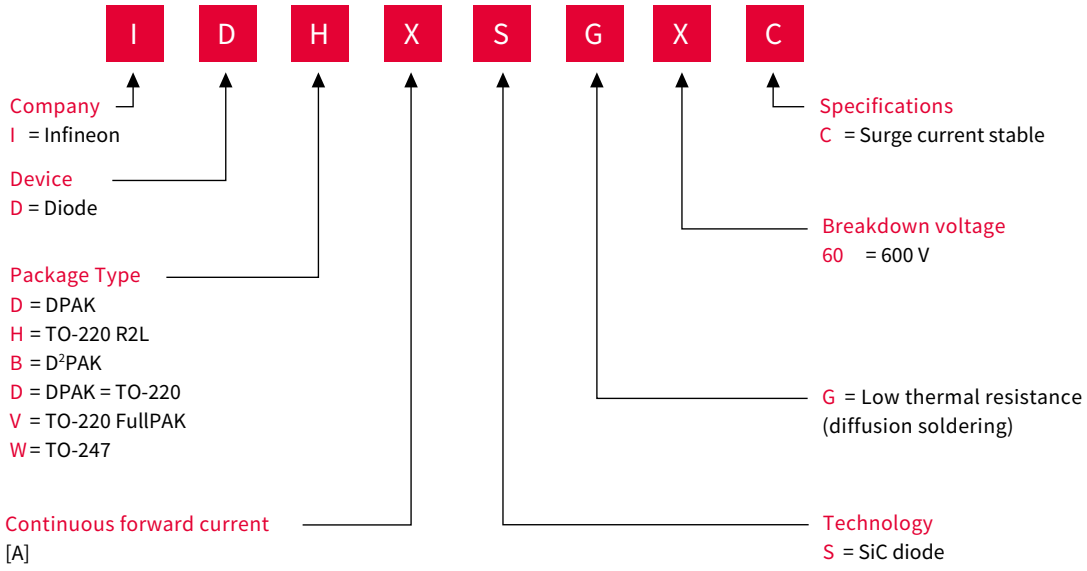

CoolSiC™ Schottky diodes G5 and G6

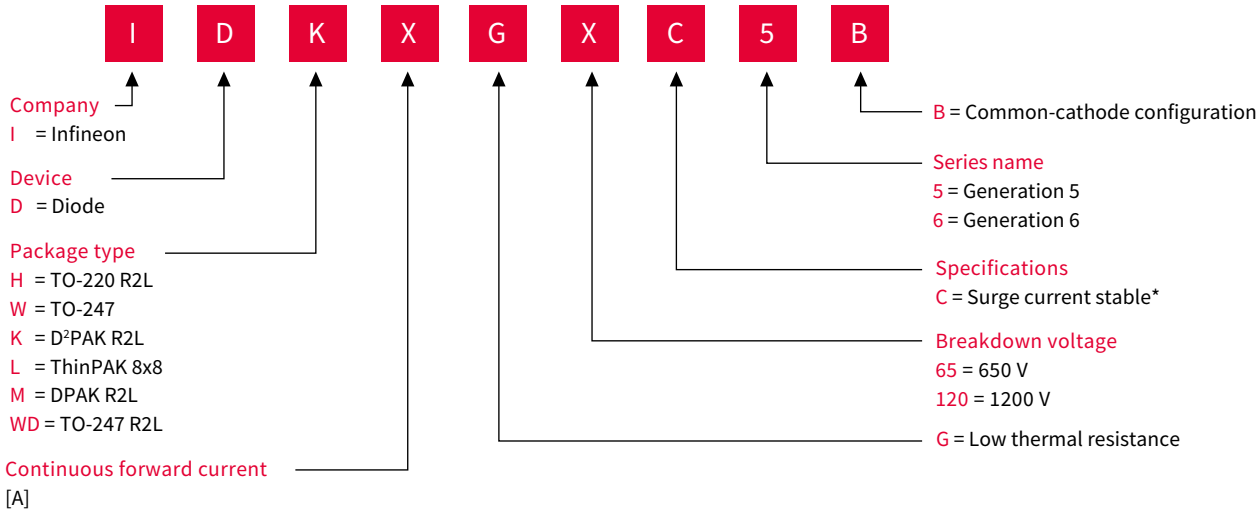

*Generation

Infineon support for wide bandgap semiconductors

Useful links and helpful information

Further information, datasheets and documents

infineon.com/wbg
infineon.com/sic
infineon.com/sic-diodes
infineon.com/gan
infineon.com/gan-ips
infineon.com/gan-eicedriver
infineon.com/SiCgd

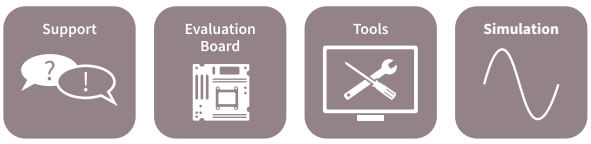

Discrete IGBTs and silicon power diodes

- Discrete IGBTs
- 650 V TRENCHSTOP™ 5 IGBT
- 1200 V IGBT families
- Lower power drive IGBT portfolio
- 650 V Reverse Conducting R6 IGBT
- TRENCHSTOP™ advanced isolation
- Integrated Power Device - IPD protect
- TRENCHSTOP™ 5 selection tree
- IGBT selection tree
- Discrete IGBTs product portfolio
- Silicon power diodes
- IGBT nomenclature
- Silicon power diodes nomenclature

Discrete IGBTs

Market leadership through groundbreaking innovation and application focus

Resolute to achieve the highest standards in performance and quality, Infineon offers a comprehensive portfolio of application-specific discrete IGBTs. From 600 V up to 1600 V, we offer a wide range of IGBT voltage classes to meet different voltage requirements in each application.

kHz f_{sw} [kHz] (typical used up to) µs Short circuit withstand time [µs]

High-power drive IGBT portfolio

Did you know that you could potentially save 20% of energy or 17 million tons of CO2 if only half of all industrial drives had an electric speed control? Infineon has designed the 7th generation of TRENCHSTOP™ IGBTs, especially for variable speed drives. Based on the new micro-pattern trench technology, which offers a high level of controllability. These features bring significant loss reduction in the application, especially for industrial drives, which usually operate at moderate switching frequency.

650 V TRENCHSTOP™ 7 T7

If you still use old technology, like the short-circuit IGBT 3 or the non short-circuit TRENCHSTOP™ 5, then it is about time to change that.

Why? Because:

- The flexible family IGBT7 T7 is a benchmark in performance with state-of-the-art quality and best price/performance ratio.
- IGBT7 T7 is the best-in-class device for industrial motor drives, namely uninterruptable power supplies for photovoltaic and air conditioning PFC topologies

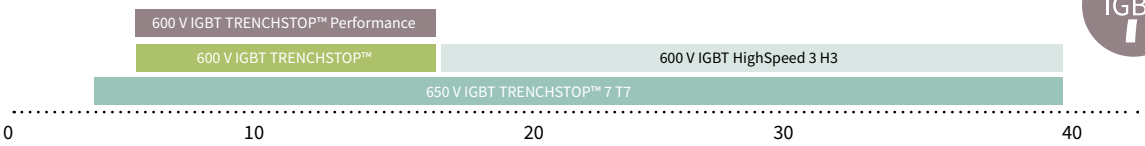

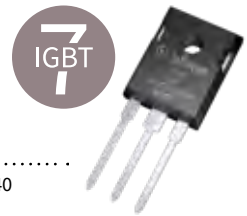

1200 V TRENCHSTOP™ 7 S7

The new 1200 V IGBT generation TRENCHSTOP™ IGBT7 is designed to meet requirements of high efficiency, lowest conduction and switching losses in hard switching and resonant topologies operating at switching frequencies up to 20 kHz. Very soft, fast recovery anti-parallel emitter controlled diode is optimized for fast recovery while still maintaining a high level of softness complementing to an excellent EMI behavior.

Target applications:

- Industrial drives
- Solar
- UPS

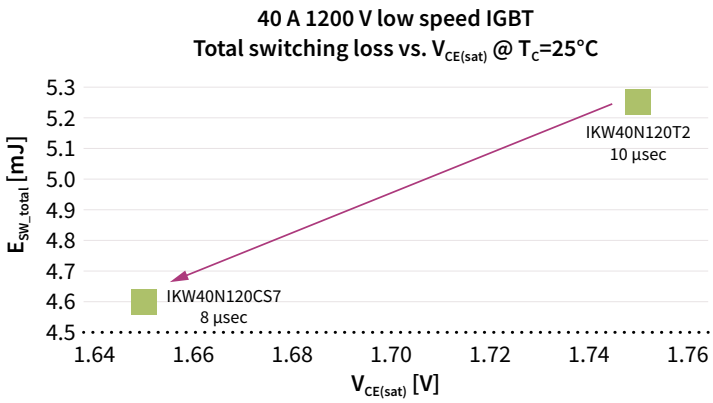

The best-in-class MPT technology of the TRENCHSTOP™ IGBT7 S7 allows reduction of both $V_{CE(sat)}$ by ~ 10% and total switching losses of > 10% compared to the TRENCHSTOP™ 2 family.

650 V TRENCHSTOP™ 5 IGBT

In terms of switching and conduction losses, there is no other IGBT in the market that can match the performance of the TRENCHSTOP™ 5. Wafer thickness has been reduced by more than 25 percent, which enables a dramatic improvement in both switching and conduction losses while providing an increased breakthrough voltage of 650 V. Based on TRENCHSTOP™ 5 IGBT technology, Infineon has developed six different product families optimized for specific applications, allowing designers to optimize for high efficiency, system cost or reliability demands of the market. The quantum leap of efficiency improvement provided by the TRENCHSTOP™ 5 IGBT families opens up new opportunities for designers to explore. EiceDRIVER™ isolated gate driver such as the 1ED compact family 650 V IGBT in solar and UPS applications. EiceDRIVER™ low side gate driver with overcurrent protection is widely used in induction cooking application and PFC stage.

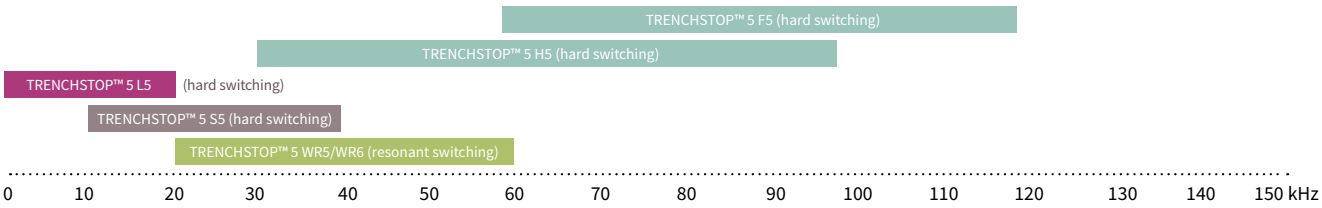

TRENCHSTOP™ 5 L5	**Best-in-class IGBT low $V_{CE(sat)}$ IGBT** $V_{CE(sat)}$ IGBT – 1.05 V Best trade-off $V_{CE(sat)}$ V_{ss} E_{ts} for frequencies below 20 kHz	**Solar, UPS, welding** › Ultralow frequency converters › Three-level inverter type I NPC 1 and NPC 2 › Modified HERIC inverter › AC output (aluminum/magnesium welding)
TRENCHSTOP™ 5 S5	**Best-in-class ease-of-use IGBT** Elimination of: › Collector-emitter snubber capacitor and gate capacitor in low inductance designs (<100 nH) › Softer switching than TRENCHSTOP™ 5 H5	**UPS, battery charger, solar, welding** › Medium frequency converters › Multilevel inverter stages › Output stages › PFC
TRENCHSTOP™ 5 H5/F5	**Best-in-class high frequency IGBT** › Bridge to SJ MOSFET performance › Highest efficiency, especially under light load conditions	**UPS, solar, welding** › High frequency converters › Multilevel inverter stages › Output stages › PFC
TRENCHSTOP™ 5 WR5	**Price optimized application specific IGBT for zero current switching (ZCS)** › Optimized full rated hard switching turn-off typically found in welding › Excellent R_G controllability › Soft recovery plus low reverse recovery charge (Q_{rr}) for diode	**Air conditioning, welding** › Medium frequency converters › Zero-voltage switching › PFC
TRENCHSTOP™ 5 WR6	**Outstanding price-performance ratio with the latest 650 V reverse-conducting IGBT in the new high creepage TO-247-3 package** › Very low $V_{CE(sat)}$ of 1.4 V @25°C › High creepage and clearance TO-247 package › Optimized for full-rated hard switching turn-off	**Air conditioning, welding** › RAC/CAC PFC outdoor compressor › Compact/portable welding › Light-medium industrial welding

1200 V IGBT families

The 1200 V TRENCHSTOP™ 2 IGBT is optimized for low conduction losses with the lowest saturation voltage $V_{CE(sat)}$ of 1.75 V. A soft fast recovery emitter controlled diode further minimizes the turn-on losses.

The 1200 V HighSpeed 3 discrete IGBTs provides the lowest losses and the highest reliability for switching above 20 kHz. Transition to fast switching high-speed devices allows reduction in the size of the active components (25-70 kHz).

The new 1200 V IGBT generation, TRENCHSTOP™ IGBT6, is designed to meet requirements of high efficiency, lowest conduction and switching losses in hard switching and resonant topologies, operating at switching frequencies above 15 kHz. The IGBT6 devices can be used as direct replacement for the HighSpeed 3 H3 series, without any changes of the design. Such plug-and-play replacement of H3 with new S6 IGBT may benefit up to 0.2 percent efficiency improvement.

The Reverse Conducting R5 is the latest generation in the RC-H series of reverse conducting IGBT. With a monolithically integrated diode, they offer optimized performance for resonant switching applications such as induction cooking. R5 devices are also available in 1350 V and 1600 V blocking voltage.

EiceDRIVER™ isolated gate driver like 1ED Compact family and EiceDRIVER™ 1200 V level shift gate driver family are perfect match for the 1200 V IGBT in motor control, general purpose inverter, solar, and UPS applications. EiceDRIVER™ low-side gate driver with over current protection is widely used in induction cooking application.

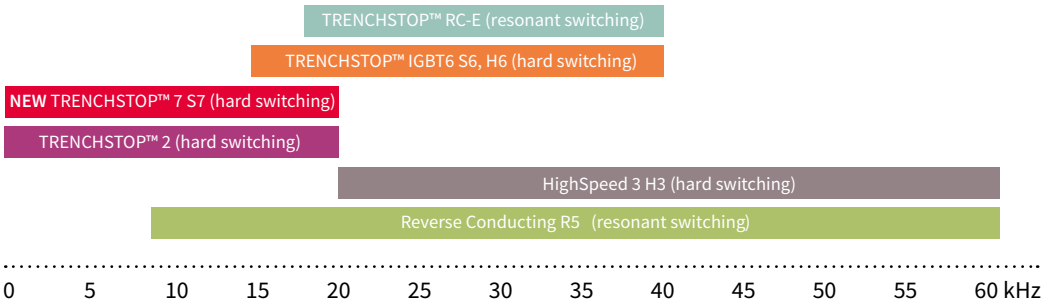

Reverse Conducting R5	**World-class Reverse Conducting RC-H products** High performance and low losses	**Induction cooking** **Resonant switching** Medium to high frequency converters
Reverse Conducting E1	**Competitive Reverse Conduction RC-E** Price versus performance leader	**Induction cooking** **Resonant switching** Low to medium power cookers
TRENCHSTOP™ 2	**Best-in-class 1200 V IGBT** › Outstanding efficiency › Lowest conduction and switching losses › Market proven and recognized quality leader	**Motor control, general purpose inverter, solar, UPS** Low frequency converters
HighSpeed 3 H3	**High speed/high power IGBT** › First tailless/low loss IGBT on market › Market proven and recognized quality leader	**Solar, UPS, welding** Medium frequency converters
TRENCHSTOP™ IGBT6	**New low switching losses and high power IGBTs** › Optimized for operation at 15 – 40 kHz › Best combination of low $V_{CE(sat)}$ of 1.85 V and low switching losses	**UPS, solar, welding** Medium frequency converters

Lower power drive IGBT portfolio

650 V TRENCHSTOP™ IGBT6 and 600 V RC-D2

Motor drives up to 1 kW are used in a wide variety of applications, from home appliance fans and compressors to pumps. The market for these products demands design flexibility, EMI performance, and easy controllability. Therefore, these compact motors require power electronics with the lowest losses and best thermal performance. The TRENCHSTOP™ IGBT6 family of discrete devices has been designed for the lowest switching losses, which is particularly important in systems with higher switching frequencies (up to 30 kHz). Additionally, the IGBTs are co-packed with the soft, fast-recovery Rapid 1 anti-parallel diodes for the lowest total losses. With a higher blocking voltage at 650 V, and short-circuit rating, TRENCHSTOP™ IGBT6 is a key contributor to robust motor designs. The new RC-D2 family of discrete devices has been cost-optimized in surface-mounted packages. The device contains a monolithically integrated diode and has HV-H3TRB ruggedness capability. With a blocking voltage at 600 V, and short -circuit rating, the RC-D2 is a key contributor to cost-effective motor designs.

Switch selection for low power drives < 300 W

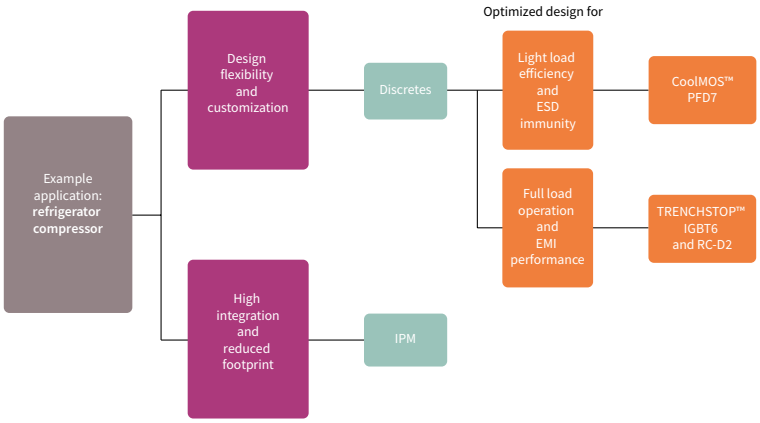

Features and benefits

Key features	Key benefits
› Available in surface-mounted packages	› Enable space limited application
› IGBT6 co-packed with and without diodes (DPAK, TO-220)	› Performance improvement
› RC-D2 monolithically integrated diode (DPAK, SOT-223)	› Cost-optimized solution
› SC rating between 3 µs and 5 µs	› SC protection
› Low EMI due to easy controllability	› No need for additional components on PCB

EMI performance

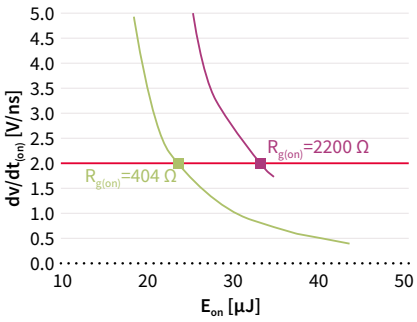

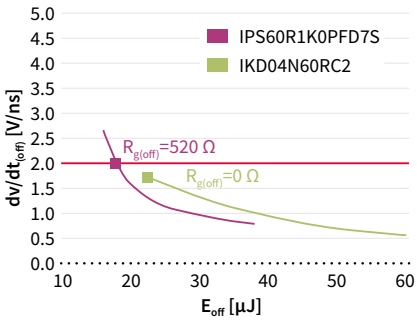

- $R_{g(on)}$ and $R_{g(off)}$ are selected to meet dv/dt of 2 V/ns at 500 mA and T_j of 100°C
- IGBTs (IKD04N60RC2) are easily controllable by optimizing R_g values
- CoolMOS™ (IPS60R1K0PFD7S) EMI performance can be enhanced with additional passive components

For more details on the product, click on the part number or contact our product support.

Reverse Conducting for soft-switching applications

650 V Reverse Conducting R6 IGBT in TO-247 package

The 650 V R6 IGBT offers the lowest $V_{CE(sat)}$ and optimized E_{off} for best efficiency, minimized power losses and cooling effort. The good EMI behavior simplifies filtering design, reduces system costs and effort for the designers.
Thanks to the best system performances and high compatibility with the existing gate driver solution, 650 V R6 IGBT represents the optimal choice for soft switching topologies.

Features and benefits

Key features	Key benefits
› Very low $V_{CE(sat)}$ and low E_{off}	› Lowest losses on IGBT, high system efficiency for higher power output
› High ruggedness and stable temperature behavior	› Fast and easy replacement of predecessor R5 portfolio
› Maximum operating T_J of 175 °C	› High device reliability
	› Good EMI behavior

Package innovations

Discrete IGBT package overview

Infineon discrete IGBT package portfolio contains SMD (surface mount device) packages, for example, D²PAK, DPAK, SOT-223, and through-hole packages, for example, TO-220, TO-220 FP, TO-247, T0-247 HCC, TO-247-4, TO-247PLUS, TO-247PLUS-4, and TO-247 advanced isolation packages. It provides discrete IGBTs solutions with and without anti-parallel diode, which is an excellent fit to use in industrial, home appliance, and automotive applications.

	P-SOT-223-4 SMD, single transistor, small signal	TO-252 (DPAK)	TO-263 (D²PAK)	TO-220	TO-220 FullPAK	TO-247	TO-247 4-pin	TO-247PLUS	TO-247PLUS 4-pin	TRENCH-STOP™ advanced isolation TO-247	TO-247 HCC
Package options	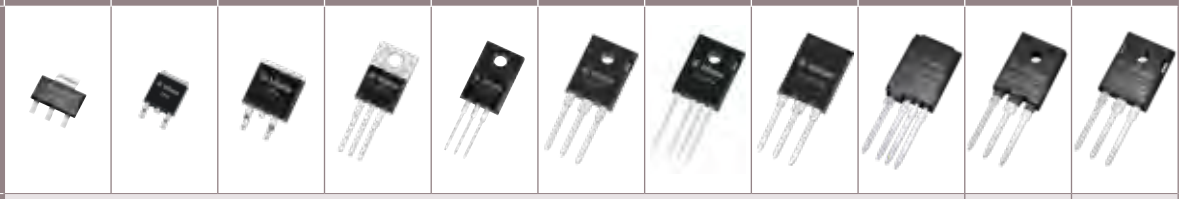										
Voltage class	600 V, 650 V, 1100 V, 1200 V, 1350 V, 1600 V									600 V, 650 V	650 V
Configuration	DuoPack (with diode), single IGBTs									DuoPack IGBTs (with diode) and single diodes	
Continuous collector current T_C = 100°C	3-120 A									40-90 A	20 -70 A

TRENCHSTOP™ advanced isolation

Fully isolated TO-247 package with industry leading IGBTs

TRENCHSTOP™ advanced isolation solution breaks the limits reached by traditional packaging and isolation techniques. This new isolated package enables the highest power density, the best performance and the lowest cooling effort thanks to an effective and reliable thermal path from the IGBT die to the heatsink.

In addition to providing 100 percent electrical isolation, TRENCHSTOP™ advanced isolation also eliminates the need for thermal grease or thermal interface sheets. The new package delivers at least 35 percent lower thermal resistivity, helping designers to increase power density, as well as lower system complexity and assembling costs.
This new package solution allows industrial and home appliance designs to fully utilize the high performance of TRENCHSTOP™ IGBTs without compromises for isolation and cooling.

Features and benefits

Key features	Key benefits
› 2500 V_{RMS} electrical isolation, 50/60 Hz, t = 1 min	› Up to 35 percent reduction in assembly time reduces manufacturing cost
› 100 percent tested isolated mounting surface	› Increased power density
› Lowest $R_{th(j-h)}$	› Improved reliability from higher yield and no isolation film misalignment
› Low coupling capacitance, 38 pF	› Less EMI filter design effort
› No need for isolation film or thermal interface material	› Decreased heatsink size

Thermal resistivity of package and isolation types

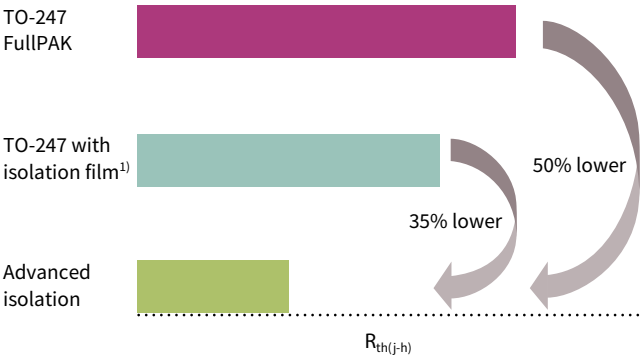

1) Isolation material: standard polyimide based reinforced carrier insulator film with 152 µm thickness, 1.3 W/mK thermal conductivity

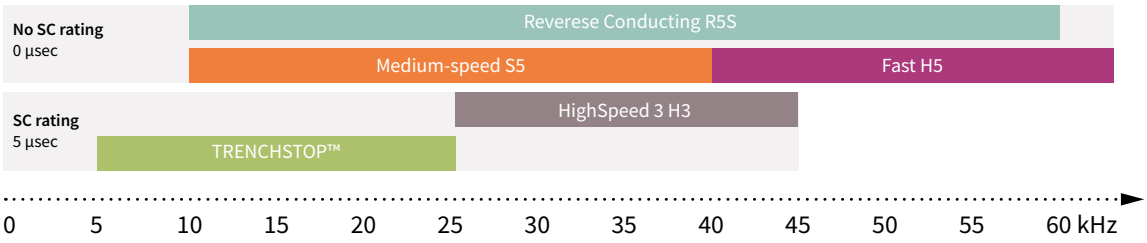

Integrated Power Device – IPD protect

IEWS20R5135IPB - 20 A 1350 V TRENCHSTOP™ IGBT with integrated protective functions

Infineon's IEWS20R5135IPB is a best-in-class IGBT in RC-H5 technology with a unique protective gate driver IC co-packed in a TO-247 6-pin package for induction heating applications. IPD protect has, not only the industry's best IGBT performance considering blocking voltage, static losses and conduction losses in induction cooktop applications and other soft switching application, but also integrated protection functions.

Its original concept provides protection against overvoltage, overcurrent, and overtemperature and additional features as a unique active clamp control, fault condition notification, and a special two level turn-on gate driving current that reduces significantly the typical high start-up peak current. These integrated protection functions provide a simple and robust solution for increased overall system reliability.

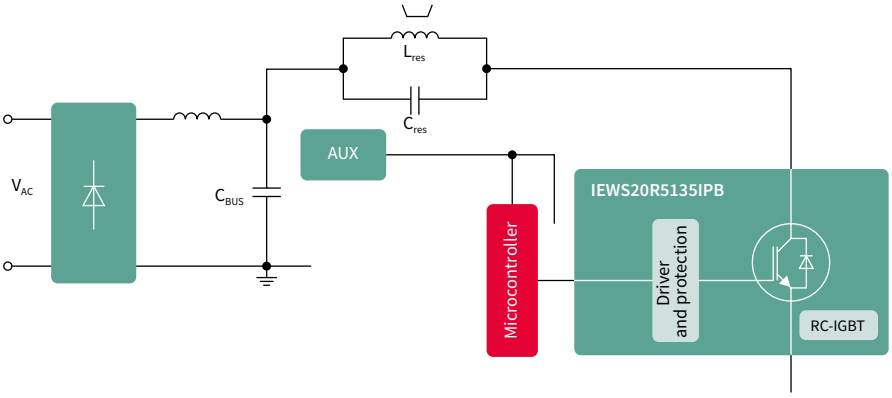

Features and benefits

Key features	Key benefits
› Reverse Conducting IGBT with monolithic body diode designed for soft switching	› Increased overall reliability, reducing costs for replacement/rework
Integrated driver with › Overvoltage and overcurrent protection › Active clamp control circuit › Programmable overvoltage threshold › Programmable cycle-by-cycle overcurrent threshold › Integrated gate drive with 2 level turn-on current › Temperature warning › Over-temperature protection › V_{CC} UVLO › Integrated ESD protection and latch immunity on all pins	› Reduced board complexity and design-in effort › Simplified BOM and reduced cost for total solution › Best-in-class performance IGBT
› TO-247 6-pin package	

TRENCHSTOP™ 5 selection tree

650 V

Free wheeling diode (FWD)

No

50 Hz-20 kHz low speed	30 kHz-120 kHz high speed
Low $V_{CE(sat)}$ TRENCHSTOP™ 5 L5	TRENCHSTOP™ 5 H5/F5/S5
Corresponding best fit IGBT	
IGW30N65L5	IGB15N65S5 IGB20N65S5 IGB50N65S5 IGB50N65H5 IGP20N65H5/F5 IGP30N65H5/F5 IGP40N65H5/F5 IGW30N65H5/F5 IGW40N65H5/F5 IGW50N65H5/F5 IGZ50N65H5 IGZ75N65H5 IGZ100N65H5
Solar, UPS, Welding	UPS, Solar, Charger, Welding

Yes

50 Hz-20 kHz low speed	> 20 kHz-60 kHz high speed	10 kHz-40 kHz high speed	30 kHz-100 kHz high speed	60 kHz-120 kHz ultra-high speed
Low $V_{CE(sat)}$ TRENCHSTOP™ 5 L5	RC TRENCHSTOP™ 5 WR5 / WR6	„Soft“ TRENCHSTOP™ 5 S5	TRENCHSTOP™ 5 H5	TRENCHSTOP™ 5 F5
Corresponding best fit IGBT				
IKW30N65EL5 IKW30N65NL5 IKW75N65EL5 IKZ75N65EL5	IKW30N65WR5 IKW40N65WR5 IKW50N65WR5 IKWH30N65WR5 IKWH20N65WR6 IKWH30N65WR6 IKWH40N65WR6 IKWH50N65WR6 IKWH60N65WR6 IKWH70N65WR6	IKW30N65ES5 IKW40N65ES5 IKW50N65ES5 IKW75N65ES5 IKZ50N65ES5 IKZ75N65ES5 IKB30N65ES5 IKB40N65ES5	IKP08N65H5 IKP15N65H5 IKP20N65H5 IKP30N65H5 IKP40N65H5 IKA08N65H5 IKA15N65H5 IKW30N65H5 IKW40N65H5 IKW50N65H5 IKW50N65EH5 IKW75N65EH5 IKZ50N65EH5 IKZ50N65NH5 IKZ75N65EH5 IKZ75N65NH5 IKB15N65EH5 IKB20N65EH5 IKB30N65EH5 IKB40N65EH5	IKP08N65F5 IKP15N65F5 IKP20N65F5 IKP30N65F5 IKP40N65F5 IKA08N65F5 IKA15N65F5 IKW30N65F5 IKW40N65F5 IKW50N65F5 IKB40N65EF5
Solar, UPS, Welding	Aircon, Welding, PFC	UPS, Solar, Charger, Welding	Aircon, UPS, Solar, Charger, Welding	UPS, Solar, Charger, Welding

IGBT selection tree

IGBT

Diode commutation

Soft | Hard/no diode for IG** parts

Frequency range

8-75 kHz RC series (monolithic)	2-40 kHz			10-40 kHz medium speed	> 18-60 kHz high speed	10-100 kHz high speed	> 18-60 kHz high speed	50 Hz - 20 kHz low speed
	RC-drives (monolithic)	NEW **TRENCHSTOP™ 7** Performance	TRENCHSTOP™ IGBT6	Soft turn-off TRENCHSTOP™ 5 S5	HighSpeed 3 H3	TRENCHSTOP™ 5 H5/F5	TRENCHSTOP™ 5 WR5/WR6	Low $V_{CE(sat)}$ TRENCHSTOP™ 5 L5

Voltage range

650 V, 1100 V, 1200 V, 1350 V, 1600 V	600 V	600 V, 650 V 1200 V	650 V, 1200 V	650 V	600 V, 1200 V	650 V	650 V	650 V

Part number

IHpccNvvvR3 IHpccNvvvR5 NEW **IHpccN65R6** IHpccN120E1 IHFW40N65R5S IEWS20R5135IPB	IKpccN60R NEW **IKpccN60RC2** IKpccN60RF	NEW **IKpccN65ET7** NEW **IKpccN120CS7** IKpccN60T IKpccT120 IGpccN60T IGpccN60TP IGpccT120 IGpccN120T2	KpccN65ET6 IGpccN65T6 IKpccN120dS6 IKpccN120dH6	IKpccN65dS5	IKpccN60H3 IKpccN120H3 IGpccN60H3 IGpccN120H3	IKpccN65H5 IKpccN65F5 IGpccN65H5 IGpccN65F5	IKpccN65WR5 NEW **IKpccN65WR6**	IKpccN65dL5 IGpccN65L5

Applications

Induction cooking **Microwave** **Multifunction printers** **Half-bridge resonant (Current resonance < 650 V)** **Single switch (Voltage resonance > 650 V)**	Conduction loss optimized **Solar inverter** **Asymmetrical bridge** Symmetrical full-bridge Three-level type I or three-level type II converter **Motor control** Three-phase inverter Full-bridge inverter Single-phase inverter **Uninterruptable power supply** UPS bridge Three-level type II converter **Major and small home appliances** Symmetrical full-bridge Single-phase inverter	**UPS** **Energy storage** **Battery charger** **Welding** **Solar inverter**	**PFC** **Battery charger** **Welding** **UPS** **Solar** **Energy storage** **SMPS** **Air conditioning** **HVDC (telecom/data centers)** **Totem pole PFC**	**PFC** **RAC/CAC PFC outdoor compressor** **Welding inverter** Full-brigde Half-bridge Two transistor forward	**UPS** Three-level NPC1 and NPC2 topology, inner switches **Solar** Three-level NPC1 and NPC2 topology, inner switches **Welding** AC output (Al/Mag welding)

TRENCHSTOP™ and RC-drives

600 V/650 V product family together with 650 V SOI gate driver family

Continuous collector current @ T_c=100°C [A]		TO-251 (IPAK) Halogen-Free	TO-252 (DPAK) Halogen-Free	TO-263 (D^2PAK) Halogen-Free	TO-220 Halogen-Free	TO-247 advanced isolation Halogen-Free	TO-220 FullPAK Halogen-Free	TO-247 Halogen-Free	TO-247PLUS/ Super 247 (TO-247AA) Halogen-Free	SOT-223 Halogen-Free
Single IGBT	4	IGU04N60T								
	6		IGD06N60T IGD06N65T6 *		IGP06N60T					
	10		IGD10N65T6	IGB10N60T	IGP10N60T					
	15		IGD15N65T6	IGB15N60T	IGP15N60T					
	30			IGB30N60T				IGW30N60T IGW30N60TP		
	40							IGW40N60TP		
	50			IGB50N60T	IGP50N60T			IGW50N60T IGW50N60TP		
	75							IGW75N60T		
IGBT and diode	3		IKD03N60RF							IKN03N60RC *
	4		IKD04N60RC2 IKD04N60RF IKD04N60R		IKP04N60T					IKN04N60RC2 *
	6		IKD06N60RC2 IKD06N60RF IKD06N60R IKD06N65ET6	IKB06N60T	IKP06N60T		IKA06N60T			IKN0N60RC2 *
	8		IKD08N65ET6							
	10		IKD10N60RC2 IKD10N60RF IKD10N60R	IKB10N60T	IKP10N60T		IKA10N60T			
	15		IKD15N60RC2 IKD15N60RF IKD15N60R	IKB15N60T	IKP15N60T		IKA15N60T			
	20			IKB20N60T	IKP20N60T			IKW20N60T		
	30							IKW30N60T IKW30N60DTP		
	40							IKW40N60DTP		
	50					IKFW50N60ET		IKW50N60T IKW50N60DTP		
	75					IKFW75N60ET		IKW75N60T		
	100								IKQ100N60T	
	120								IKQ120N60T	

* Coming soon

For more details on the product, click on the part number or contact our product support.

TRENCHSTOP™ IGBT6

650 V product family together with 650 V SOI gate driver family

Continuous collector current @ Tc=100°C [A]	TO-252 (DPAK) Halogen-Free	TO-220 FullPAK Halogen-Free
6	NEW IKD06N65ET6 NEW IGD06N65T6	
8	NEW IKD08N65ET6	IKA08N65ET6
10	NEW IGD10N65T6	IKA10N65ET6
15	NEW IGD15N65T6	IKA15N65ET6

TRENCHSTOP™ IGBT6

1200 V fast speed IGBT product family together with isolated gate driver family

	Continuous collector current @ T_c=100°C [A]	TO-247	TO-247PLUS 3-pin Halogen-Free	TO-247PLUS 4-pin Halogen-Free
DuoPack	15	IKW15N120BH6		
DuoPack	40	IKW40N120CS6		IKY40N120CS6
DuoPack	75		IKQ75N120CS6	IKY75N120CS6

TRENCHSTOP™

1200 V product family together with isolated driver and 1200 V level shift driver family

	Continuous collector current @ T_c=100°C [A]	TO-247 Halogen-Free			TO-247PLUS 3-pin Halogen-Free
		TRENCHSTOP™	TRENCHSTOP™ 2	NEW TRENCHSTOP™ 7 S7	TRENCHSTOP™ 2
Single IGBT	8	IGW08T120			
Single IGBT	15	IGW15T120			
Single IGBT	25	IGW25T120			
Single IGBT	40	IGW40T120			
Single IGBT	60	IGW60T120			
DuoPack	8	IKW08T120		NEW IKW08N120CS7	
DuoPack	15	IKW15T120	IKW15N120T2	NEW IKW15N120CS7	
DuoPack	25	IKW25T120	IKW25N120T2	NEW IKW25N120CS7	
DuoPack	40	IKW40T120	IKW40N120T2	NEW IKW40N120CS7	IKQ40N120CT2
DuoPack	50			NEW IKW50N120CS7	IKQ50N120CT2
DuoPack	75				IKQ75N120CT2

NEW TRENCHSTOP™ 7 T7

Together with isolated driver, 650 V SOI driver, and low side driver family

	Continuous collector current @ Tc=100°C [A]	TO-220 FullPAK Halogen-Free
DuoPack	20	NEW IKW20N65ET7
DuoPack	30	NEW IKW30N65ET7
DuoPack	40	NEW IKW40N65ET7
DuoPack	50	NEW IKW50N65ET7
DuoPack	75	NEW IKW75N65ET7

For more details on the product, click on the part number or contact our product support.

Induction cooking series

650 V, 1100 V, 1200 V, 1350 V and 1600 V product families together with isolated driver and low side driver family

Continuous collector current @ T_c=100°C [A]		TO-247 advanced isolation Halogen-Free	TO-247 Halogen-Free					TO-247 6-pin IPD Protect Halogen-Free
			650 V	1100 V	1200 V	1350 V	1600 V	
	15				IHW15N120E1			
	20							IEWS20R5135IPB
					IHW20N120R5	IHW20N135R5		
	25				IHW25N120E1			
	30		NEW IHW30N65R6 IHW30N65R5	IHW30N110R3	IHW30N120R5	IHW30N135R5	IHW30N160R5	
	40	IHFW40N65R5S *	NEW IHW40N65R6 IHW40N65R5		IHW40N120R5	IHW40N135R5		
	50		NEW IHW50N65R6 IHW50N65R5					

HighSpeed 3

Together with isolated driver, 650 V SOI driver, and low side driver family

Continuous collector current @ T_c=100°C [A]		TO-263 (D²PAK) Halogen-Free	TO-220 Halogen-Free	TO-247 advanced isolation Halogen-Free	TO-247 Halogen-Free
IGBT	20	IGB20N60H3	IGP20N60H3		IGW20N60H3
IGBT	30	IGB30N60H3	IGP30N60H3		IGW30N60H3
IGBT	40				IGW40N60H3
IGBT	50				IGW50N60H3
IGBT	60				IGW60N60H3
IGBT	75				IGW75N60H3
IGBT	100				IGW100N60H3
DuoPack	20	IKB20N60H3	IKP20N60H3		IKW20N60H3
DuoPack	30				IKW30N60H3
DuoPack	40			IKFW40N60DH3E	IKW40N60H3
DuoPack	50			IKFW50N60DH3E IKFW50N60DH3	IKW50N60H3
DuoPack	60			IKFW60N60DH3E IKFW60N60EH3	IKW60N60H3
DuoPack	75				IKW75N60H3
DuoPack	90			IKFW90N60EH3	

HighSpeed 3

1200 V product family together with isolated driver, and 1200 V level shift driver family

Continuous collector current @ T_c=100°C [A]		TO-247 Halogen-Free	TO-247PLUS 3-pin Halogen-Free	TO-247PLUS 4-pin Halogen-Free
IGBT	15	IGW15N120H3		
IGBT	25	IGW25N120H3		
IGBT	40	IGW40N120H3		
DuoPack	15	IKW15N120H3		
DuoPack	25	IKW25N120H3		
DuoPack	40	IKW40N120H3	IKQ40N120CH3	IKY40N120CH3
DuoPack	50		IKQ50N120CH3	IKY50N120CH3
DuoPack	75		IKQ75N120CH3	IKY75N120CH3

*For more information on the product, contact our product support

For more details on the product, click on the part number or contact our product support.

TRENCHSTOP™ 5 F5, H5 and S5

Together with isolated driver, 650 V SOI driver, and low side driver family

Continuous collector current @ T_c=100°C [A]		TO-263 (D^2PAK) Halogen-Free	TO-220 Halogen-Free	TO-247 advanced isolation Halogen-Free	TO-220 FullPAK Halogen-Free	TO-247 Halogen-Free	TO-247 4-pin Halogen-Free
IGBT	20	IGB20N65S5	IGP20N65F5/IGP20N65H5				
	30	IGB30N65S5	IGP30N65F5/IGP30N65H5				
	40		IGP40N65F5/IGP40N65H5			IGW40N65F5/IGW40N65H5	
	50	IGB50N60H5				IGW50N65F5/IGW50N65H5	IGZ50N65H5
		IGB50N60S5					
	75					IGW75N65H5	IGZ75N65H5
	100						IGZ100N65H5
DuoPack	8		IKP08N65F5/IKP08N65H5		IKA08N65F5/IKA08N65H5		
	15	IKB15N65EH5	IKP15N65F5/IKP15N65H5		IKA15N65F5/IKA15N65H5		
	20	IKB20N65EH5	IKP20N65H5/IKP20N65F5				
	28		IKP28N65ES5				
	30	IKB30N65EH5	IKP30N65H5/IKP30N65F5			IKW30N65H5	
		IKB30N65ES5				IKW30N65ES5	
	39		IKP39N65ES5				
	40	IKB40N65ES5	IKP40N65F5/IKP40N65H5	IKFW40N65DH5		IKW40N65F5/IKW40N65H5	
		IKB40N65EH5				IKW40N65ES5	
		IKB40N65EF5					
	50			IKFW50N65ES5		IKW50N65F5/IKW50N65H5	IKZ50N65EH5
				IKFW50N65DH5 IKFW50N65EH5		IKW50N65EH5 IKW50N65ES5	IKZ50N65ES5
	60			IKFW60N65ES5			
	75			IKFW75N65ES5		IKW75N65EH5	IKZ75N65EH5
				IKFW75N65EH5		IKW75N65ES5	
	90			IKFW90N65ES5			

TRENCHSTOP™ 5 L5 low $V_{CE(sat)}$

650 V product family together with low side driver family

Continuous collector current @ T_c=100°C [A]		TO-251 (IPAK)	TO-252 (DPAK) Halogen-Free	TO-263 (D^2PAK) Halogen-Free	TO-220 Halogen-Free	TO-262 (I^2PAK) Halogen-Free	TO-220 FullPAK Halogen-Free	TO-247 Halogen-Free	TO-247 4-pin Halogen-Free
IGBT	30							IGW30N65L5 *	
DuoPack	30							IKW30N65EL5	
	75							IKW75N65EL5	IKZ75N75EL5 *

TRENCHSTOP™ 5 WR5/WR6

650 V product family together with low side driver family

Continuous collector current @ T_c=100°C [A]		TO-247 Halogen-Free	TO-247 HCC Halogen-Free
DuoPack	20		NEW IKWH20N65WR6
	30	IKW30N65WR5	NEW IKWH30N65WR5/IKWH30N65WR6
	40	IKW40N65WR5	NEW IKWH40N65WR6
	50	IKW50N65WR5	NEW IKWH50N65WR6
	60		NEW IKWH60N65WR6
	70		NEW KWH70N65WR6

*For more information on the product, contact our product support

For more details on the product, click on the part number or contact our product support.

Silicon power diodes

Filling the gap between SiC diodes and emitter controlled diodes

The Rapid diode family complements Infineon's existing high-power 600 V/650 V diode portfolio by filling the gap between SiC diodes and previously released emitter controlled diodes. They offer a perfect cost/performance balance and target high-efficiency applications switching between 18 and 100 kHz. Rapid 1 and Rapid 2 diodes are optimized to have excellent compatibility with CoolMOS™ and high speed IGBTs (insulated gate bipolar transistor) such as the TRENCHSTOP™ IGBT7 and TRENCHSTOP™ 5.

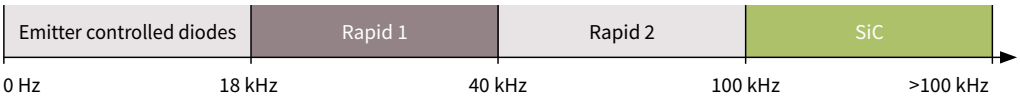

The Rapid 1 diode family

Rapid 1 is forward voltage drop (V_F) optimized to address low switching frequency applications between 18 kHz and 40 kHz, for example, air conditioner and welder PFC stages.

- 1.35 V temperature-stable forward voltage (V_F)
- Lowest peak reverse recovery current (I_{rrm})
- Reverse recovery time (t_{rr}) < 100 ns
- High softness factor

The Rapid 2 diode family

Rapid 2 is Q_{rr}/t_{rr} optimized hyperfast diode to address high-speed switching applications between 40 kHz and 100 kHz, typically found in PFCs in high efficiency switch mode power supplies (SMPS) and welding machines.

- Lowest reverse recovery charge (Q_{rr}): V_F ratio for best-in-class performance
- Lowest peak reverse recovery current (I_{rrm})
- Reverse recovery t_{rr} < 50 ns
- High softness factor

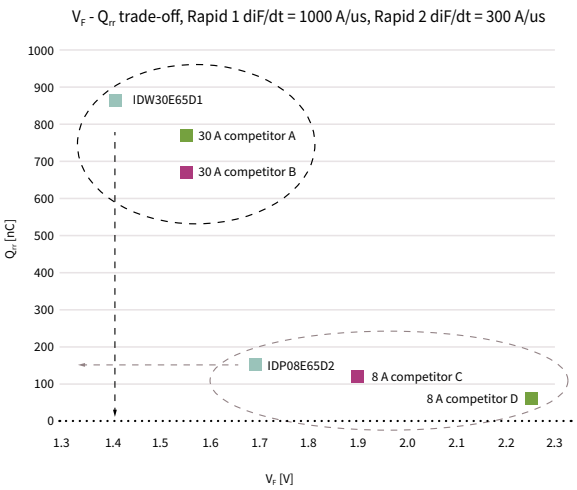

Rapid 1 diodes
650 V product family

Continuous current I_F @T_C=100°C [A]	TO-220 Halogen-Free	TO-220 FullPAK Halogen-Free	TO-247 Halogen-Free	TO-247 common cathode Halogen-Free	TO-247 advanced isolation Halogen-Free
8	IDP08E65D1				
15	IDP15E65D1				
20		IDV20E65D1			
30	IDP30E65D1		IDW30E65D1	IDW30C65D1	
40			IDW40E65D1		IDFW40E65D1E
60				IDW60C65D1	IDFW60C65D1
75				IDW75D65D1	
80				IDW80C65D1	IDFW80C65D1

Rapid 2 diodes
650 V product family

Continuous current I_F @T_C=100°C [A]	TO-220 Halogen-Free	TO-220 FullPAK Halogen-Free	TO-220 common cathode Halogen-Free	TO-247 Halogen-Free	TO-247 common cathode Halogen-Free
8	IDP08E65D2	IDV08E65D2			
15	IDP15E65D2	IDV15E65D2		IDW15E65D2	
20	IDP20E65D2		IDP20C65D2		IDW20C65D2
30	IDP30E65D2	IDV30E65D2	IDP30C65D2		IDW30C65D2
40	IDP40E65D2			IDW40E65D2	
80					IDW80C65D2

Emitter controlled diodes
600 V and 1200 V product families

	Continuous current I_F @T_C=100°C [A]	TO-263 (D^2PAK) Halogen-Free	TO-220 Real 2-pin Halogen-Free	TO-247 Halogen-Free
600 V	30			IDW30E60
600 V	50			IDW50E60
600 V	75			IDW75E60
600 V	100			IDW100E60
1200 V	12		IDP12E120	
1200 V	18		IDP18E120	
1200 V	30	IDB30E120	IDP30E120	

For more details on the product, click on the part number or contact our product support.

Nomenclature

IGBT (after 03/2013)

I K W 75 N 65 E L5

Company
I = Infineon
S = Formerly Siemens

Device
E = Enhanced
G = Single IGBT
H = Reverse conducting
K = DuoPack

Package type
A = TO-220-3 FullPAK
B = TO-263-3 (D^2PAK)
D = TO-252-3 (DPAK)
P = TO-220-3
Q = TO-247PLUS
U = TO-251-3 (IPAK)
W= TO-247-3
Y = TO-247PLUS 4-pin
Z = TO-247-4
FW = TO-247-3 advanced isolation
WH =TO-247-3 high creepage
WS = TO-247 6-pin
ZA = TO-247 4-pin asymmetric

Nominal current
[A] @ 100°C

Technology
N = N-channel
P = P-channel

E1 = Reverse conducting E-series
F5 = TRENCHSTOP™5 ultra fast
H3 = HighSpeed 3
H5 = TRENCHSTOP™5 fast
H6 = 1200 V TRENCHSTOP™ IGBT6
IPD = Integrated Power Device Protect
L5 = TRENCHSTOP™5 low $V_{CE(sat)}$
R = Reverse conducting Drives (RC-D)
R3 = Reverse conducting Gen3 (IH-series)
R5 = Reverse conducting Gen5 (IH-series)
R6 = Reverse conducting R6
RC2 = Reverse conducting Drives Gen2
RF = Reverse conducting Drives Fast
S5 = TRENCHSTOP™5 medium speed
S6 = 1200 V TRENCHSTOP™ IGBT6
S7 = 1200 V TRENCHSTOP™ IGBT7
T = TRENCHSTOP™
T2 = TRENCHSTOP™ 2
T6 = 650 V TRENCHSTOP™ IGBT6
T7 = TRENCHSTOP™ IGBT7
TP = TRENCHSTOP™ Performance
WR5 = TRENCHSTOP™ 5
WR6 = TRENCHSTOP™5 WR6

Diode (for DuoPack only)
B = Emitter controlled 1200 V half rated diode
C = Emitter controlled 1200 V full rated diode
D = Rapid 1 650 V half rated diode
E = Rapid 1 650 V full rated diode
R = CoolSiC™ 650 V half rated diode
S = CoolSiC™ 650 V full rated diode

Nominal voltage
Divided by 10 (650 V/10 = 65)

IGBT (before 03/2013)

I K W 40 N 120 H 3

Company
I = Infineon
S = Formerly Siemens

Device
K = IGBT + diode (normal drives)
H = Optimized for soft switching applications (e.g. induction heating)
G = Single IGBT
D = Diode

Package type
A = TO-220 FullPAK
B = TO-263 (D^2PAK)
D = TO-252 (DPAK)
P = TO-220
U = TO-251 (IPAK)
W = TO-247

Generation
– = Fast IGBT (~20 kHz)
Hx = HighSpeed generation (600 V - 1200 V)
Tx = TRENCHSTOP™ generation (600 V IGBT 3) (1200 V IGBT 4)
Rx = Reverse conducting
RF = Reverse conducting fast
F = HighSpeed FAST 5
Rx = Rapid diode generation

Nominal voltage
Divided by 10 (1200 V/10 = 120)

Technology
N = N-channel
T = TRENCHSTOP™
E = Emitter-controlled diodes (for diode only)

Nominal current
(@ 100°C) [A]

Nomenclature

IPD protect

I E WS 20 R5 – 135 IPB

Infineon

Product type
G = Single IGBT
H = Reverse conducting
K = DuoPack
E = Enhanced IGBT

Package
W = TO-247 3pin
Z = TO-247 4pin
WS = TO-247 6pin

Nominal current
[A] @ 100°C

IC/Co-Pack functionality
IPB = Induction cooking protection IC version B

General format:
1st: I = Induction cooking
2nd : Added funcionality
(P = protection)
3rd : version

Nominal voltage
Divided by 10 (1350 V/10 = 135)

Diode (for DuoPack only)
Note: not used for RC device = blank

Optimization
R5: RC 5th generation

Nomenclature

Silicon power diodes

I D W 75 E 65 D1 E*

Company
I = Infineon

Device
D = Diode

Package type
B = TO-263 3pin
D = TO-252 3pin
P = TO-220 2pin/3pin
V = TO-247 3pin
W = TO-247 3pin
FW = TO-247 3pin advanced isolation

Current
- Nominal current @ 100°C [A]
- Equivalent collector current for advanced isolation

E = Replacement for TO-247 with medium performance insulator or FullPAK

C = Common cathode
D = Dual anode
E = Standard configuration

Nominal voltage
Divided by 10 (650 V/10 = 65)

Optimization
Blank = Emmiter controlled
D1 = Rapid 1
D2 = Rapid 2

* Only for advanced isolation

Infineon support for discrete IGBTs and silicon power diodes

Useful links and helpful information

Further information, datasheets and documents

infineon.com/igbt
infineon.com/igbtdiscretes
infineon.com/rapiddiodes
infineon.com/discreteIGBT7
infineon.com/ultrasoftdiodes
infineon.com/discrete-automotive-igbt
infineon.com/latest-discrete-packages

Evaluationboards and simulation models

infineon.com/eval-TO-247-4pin
infineon.com/igbtdiscrete-simulationmodels

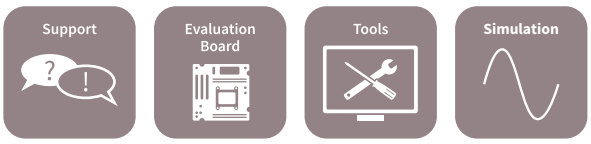

Power management ICs

- XDP™ SMPS controllers
- DC-DC digital multiphase controllers
- AC-DC power management ICs
- PFC controllers
- PWM controllers and climate saver systems
- Resonant LLC half-bridge controller ICs
- Intelligent power modules
- Switching regulators
- Voltage regulators
- Audio amplifier ICs
- Lighting ICs
- Intelligent power modules
- Motor control ICs

XDP™ SMPS

IDP2309 and IDP2303A – digital multi-mode PFC+LLC combo controller

The IDP2309 and IDP2303A are high performance digital combo controllers with integrated drivers and 600 V depletion cell designed for boost PFC and half-bridge LLC targeting switched mode power supplies (SMPS) from 75 W to 300 W.

- Support non-AUX operation with the lowest standby performance and start-up cell
- Support multi-mode PFC operation for optimized efficiency curve
- Configurable frequency setting for LLC soft-start and normal operation
- Synchronous PFC and LLC burst mode control with soft-start to prevent acoustic noise
- Excellent dynamic response by adaptive LLC burst mode
- Configurable and comprehensive protections for PFC/LLC/IC temp
- IEC62368-1 certified active X-cap discharge function
- Flexible IC parameter setting with digital UART interface supports PSU platform approach

Key benefits

- Low BOM count due to high integration of digital control
- No auxiliary power supply needed
- Easy design of system schematic and PCB layout
- Small form factor design
- Higher system reliability
- Shorter development cycles and higher design and production flexibility

Product	Target application	Major difference	Package
IDP2309	TV embedded PSU	2nd redundant PFC output overvoltage protection	DSO-14 (with enhanced HV creepage distance)
IDP2303A	Adapter, general SMPS	Constant output voltage	DSO-16

IDP2303A – power adapter

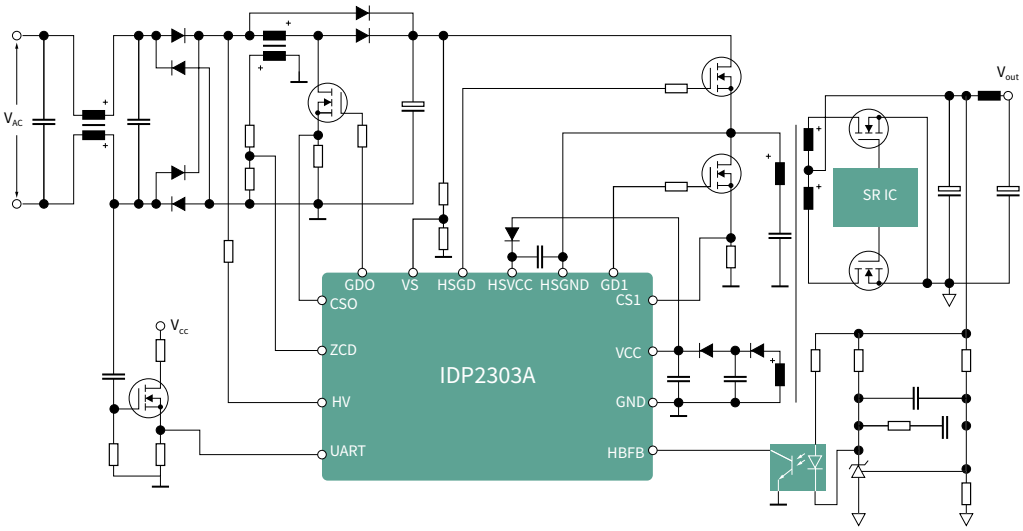

For more details on the product, click on the part number or contact our product support.

IDP2309 – embedded PSU

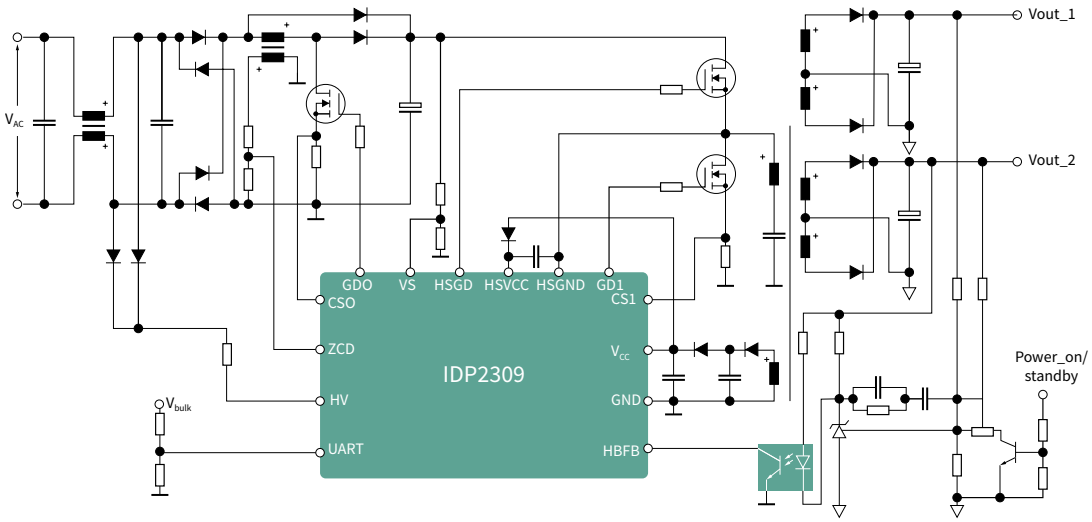

Target applications

- LCD TV power supply
- General SMPS
- Power adapter

XDP™ SMPS

XDPS21071 – digital FFR flyback controller

XDPS21071 is the first flyback controller in the industry to introduce ZVS (Zero Voltage Switching) on the primary side to achieve high efficiency with simplified circuitry and economical switches. By driving an external low voltage switch to induce a negative current to discharge the main high voltage MOSFET, switching losses can be reduced further than traditional valley switching type of switching scheme. To achieve high efficiency with synchronous rectification, DCM operation is ensured via valley detection for a safe and robust operation.

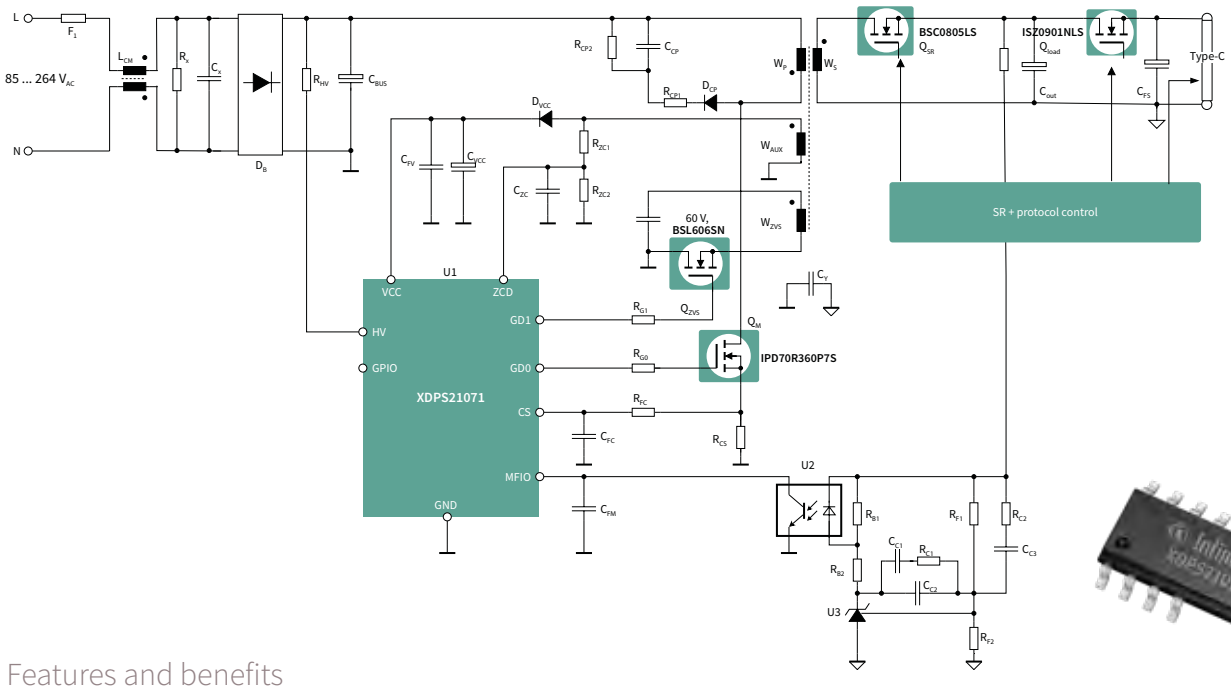

Features and benefits

Key features	Key benefits
Zero voltage switching	Reduce switching loss and achieve high efficiency
Frequency law optimization	Optimize efficiency across various line/load condition
Active burst mode operation with multi entry/exit threshold	Optimize light and no load efficiency
Integrated dual MOSFET gate driver	Save BOM count and cost with no messy external driver
Easy ZVS implementation with an external 60V MOSFET	Easy to drive, low cost and widely available off the shelf 60 V MOSFET
Multiple peak current threshold offset for different output	Fail safe mechanism to limit output power in the event of PD controller failure
CrCM operation with valley detection	Avoid CCM operation and no potential of shoot-through with SR MOSFET

REF_XDPS21071_45W1

45W USB-PD Type-C reference design in a small form factor based on XDPS21071.

- 45W USB-PD Type-C charger
- Universal input range 90~264 V_{AC}
- Supported output: 5 V/3 A, 9 V/3 A, 12 V/3 A, 15 V/3 A and 20 V/2.25 A
- Peak efficiency > 90%
- Low no-load standby input power < 30 mW

Ordering code: REFXDPS2107145W1TOBO1

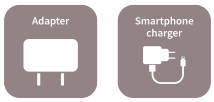

For more details on the product, click on the part number or contact our product support.

XDP™ SMPS

XDPS21081 – digital FQR flyback controller

XDPS21081 is a flyback controller with ZVS (zero-voltage switching) on the primary side to achieve high efficiency with simplified circuitry and economical switches. By driving an external low voltage switch to induce a negative current to discharge the main high voltage MOSFET, switching losses can be reduced further than the traditional valley switching the type of switching scheme. TTo achieve high efficiency with synchronous rectification, the XDPS21081 multi-mode digital forced quasi-resonant (FQR) fly-back controller IC ensures DCM (discontinued conduction mode) operation via valley detection for a safe and robust operation.

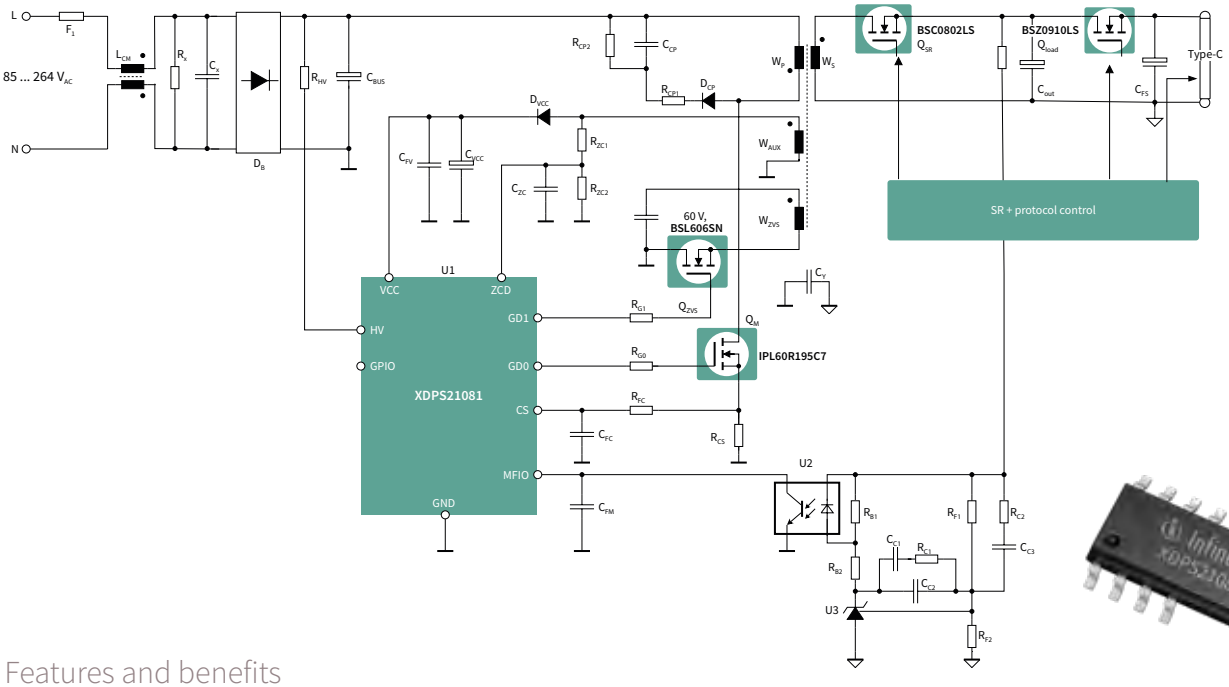

Features and benefits

Key features	Key benefits
Zero voltage switching	Reduce switching loss and achieve high efficiency
Frequency law optimization	Optimize efficiency across various line/load condition
Active burst mode operation with multi entry/exit threshold	Optimize light and no load efficiency
Integrated dual MOSFET gate driver	Save BOM count and cost with no messy external driver
Easy ZVS implementation with an external 60V MOSFET	Easy to drive, low cost and widely available off the shelf 60 V MOSFET
Multiple peak current threshold offset for different output	Fail safe mechanism to limit output power in the event of PD controller failure
CrCM operation with valley detection	Avoid CCM operation and no potential of shoot-through with SR MOSFET

REF_XDPS21081_65W1

65W USB-PD Type-C reference design in a small form factor based on XDPS21081.

- Up to 65 W output power with 25W/in³ power density
- Universal input range 90~264 V_{AC}
- Supported output: 5 V/3 A, 9 V/3 A, 12 V/3 A, 15 V/3 A and 20 V/3.25 A
- Peak efficiency > 93%
- Low no-load standby input power < 65 mW

Ordering code: REFXDPS2108165W1TOBO1

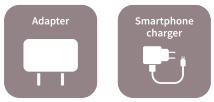

For more details on the product, click on the part number or contact our product support.

XDP™ SMPS

XDPS2201 – digital hybrid flyback controller

XDPS2201 is a multi-mode, digital configurable hybrid flyback controller that combines the simplicity of a traditional flyback topology with the performance of a resonant converter. By utilizing two high-voltage MOSFETs, such as CoolMOS™, the controller can drive both high and low-side MOSFETs in an asymmetric half-bridge flyback topology. Both zero voltage and current switching are achieved through means of regulating the polarity of the magnetizing current to increase efficiency. Also, transformer leakage energy is recycled, thereby further increasing efficiency

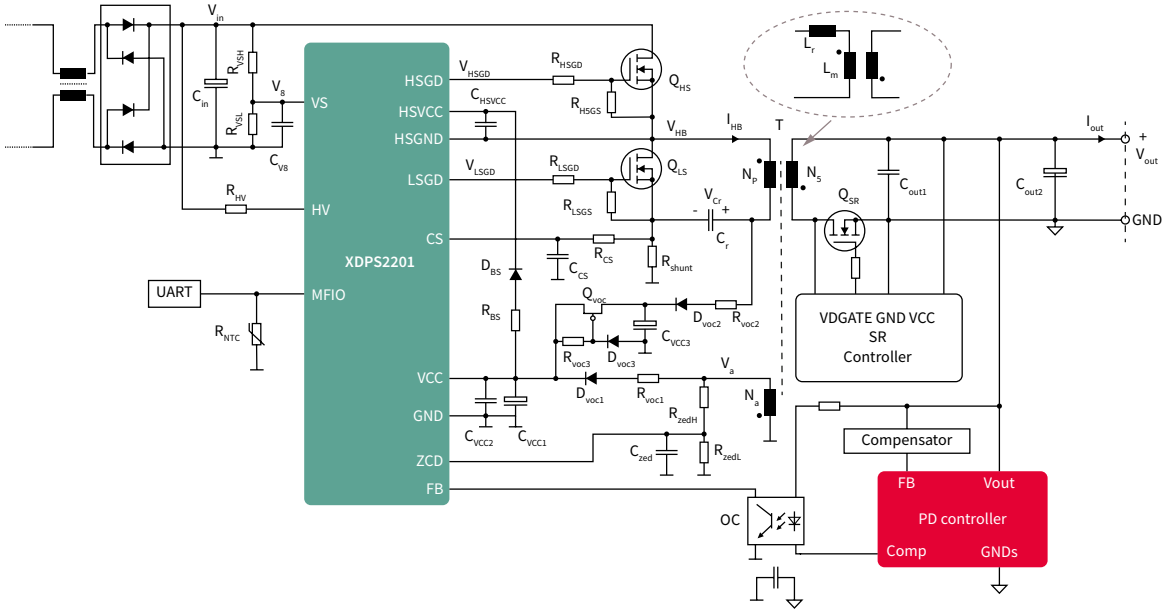

Features and benefits

Key features	Key benefits
Zero voltage and current switching across all line and load conditions	Reduce switching loss and achieve high efficiency
Multi-mode operation (active burst mode, DCM, ZV-RCS and CRM)	Optimize efficiency across various line/load condition
Integrated high-side driver and 600 V start-up cell	Optimize light and no load efficiency
Single auxiliary transformer winding and resonant cap to supply power to IC	Save BOM count and cost with no messy external driver
Comprehensive suite of protection feature sets	Easy to drive, low cost and widely available off the shelf 60 V MOSFET
Digital platform with configurable parameters	Fail safe mechanism to limit output power in the event of PD controller failure
	Avoid CCM operation and no potential of shoot-through with SR MOSFET

DEMO_XDPS2201_65W1

65W USB-PD PPS Type-C demo board in a miniature form factor based on XDPS2201.

- Up to 65W output power with 31 W/in³ power density
- Universal input range 90~264 V_{AC}
- Supported output: 5 V/3 A, 9 V/3 A, 12 V/3 A, 15 V/3 A and 20 V/3.25 A, 5~20 V / 3 A
- Peak efficiency > 93.8%
- Low no-load standby input power < 75 mW

Ordering code: DEMOXDPS220165W1TOBO1

For more details on the product, click on the part number or contact our product support.

DC-DC digital multiphase controllers

Point-of-load power management

Infineon's digital multiphase and multi-rail controllers provide power for today's medium and high current POL applications used in telecom/data-com, server, and storage environments. Infineon's digital controller family enables OEMs and ODMs to improve efficiency and total cost of ownership while increasing power density and optimizing the total system footprint of the voltage regulator. The products highlighted in the table below represent our fifth-generation digital controller family and support up to two rails with 1-6 phases on individual rails. The I2C/PMBus™ interface connects the digital controllers to the application system and provides real-time telemetry information, monitoring, and control capabilities. The digital controllers are fully configurable through our PowerCode™ and PowerClient™ graphical user interfaces that allows for easy-to-use and simplified design optimization.

Multi-phase configurations are supported for best power optimization

Feature		Controller family							
Configurable output rails		Dual rail	Dual rail	Dual/single rail	Dual/single rail	Dual rail	Dual/single rail	Dual/single rail	Dual rail
Part number	PMBus™	PXE1610C *	IR35212	XDPE10280B *	XDPE10281B *	IR35204MTRPBF	IR35201MTRPBF	IR35223 *	XDPE132G5C *
Phase configuration	Main	7 ph	7 ph	8 ph	8 ph	4 ph	8 ph	10 ph	16 ph
	Subconfigurations	6 + 1	6+1	8+0, 6+2, 4+4	8+0, 6+2, 4+4	3+1	8+0, 7+1, 6+2	10+0, 5+5	8+8
V_{out_max}		2.5 V	3.3 V	3.04 V	3.04 V	3.3 V	3.3 V	3.3 V	3.3 V
Switching frequency		Up to 2 MHz	Up to 2 MHz	Up to 2 MHz	Up to 2 MHz	Up to 2 MHz	Up to 2 MHz	Up to 2 MHz	Up to 2 MHz
Operating temperature range		- 5°C to 85°C	- 40°C to 85°C	- 40°C to 85°C	- 40°C to 85°C	- 40°C to 85°C	- 40°C to 85°C	- 40°C to 85°C	- 40°C to 120°C
VQFN package		48-lead (6x6) 0.4 mm pitch	48-lead (6x6) 0.4 mm pitch	56-lead (7x7) 0.4 mm pitch	56-lead (7x7) 0.4 mm pitch	40-lead (5x5) 0.4 mm pitch	56-lead (7x7) 0.4 mm pitch	48-lead (6x6) 0.4 mm pitch	56-lead (7x7) 0.4 mm pitch
Typical application		Intel server, high end desktop	Intel server, workstation, high end desktop	Intel server, workstation, high end desktop	AMD server, workstation, high end desktop	AMD server, memory and SOC	AMD server, CPU	Phase redundant based server systems	AMD server, GPU, ASIC, networking ASSP

Advantages of a digital controller

Protection features include a set of sophisticated overvoltage, under-voltage, over-temperature, and overcurrent protection. Each of the controllers in the table above also detects and protects against an open circuit on the remote sensing inputs. These attributes provide a complete and advanced protection feature set for microprocessor, DSP, FPGA, or ASIC power systems. Accurate current sense telemetry achieved through internal calibration that measures and corrects current sense offset error sources upon start-up. Programmable temperature compensation provides accurate current sense information even when using DCR current sense.

*For more information on the product, contact our product support

For more details on the product, click on the part number or contact our product support.

Typical multiphase application circuit

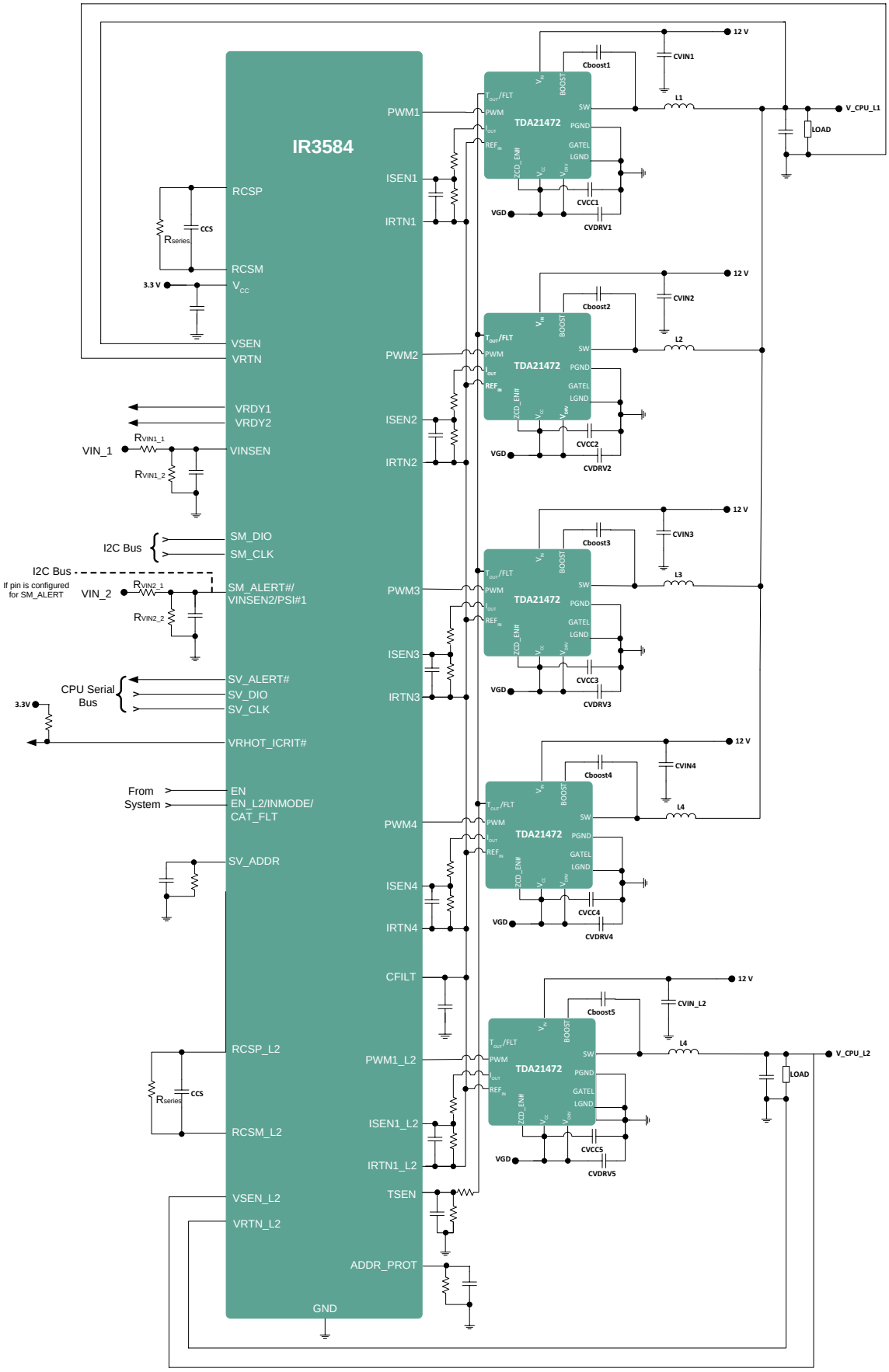

AC-DC power management ICs

Technology leadership in power supply

By offering a wide variety of highly efficient control ICs we enable our customer to meet new demands like PFC regulations and ultra low standby power requirements in a very cost effective way. A comprehensive array of safety features helps to minimize the number of external components, reduces design in time and improves the reliability of the SMPS.

AC-DC power management ICs

PFC controller

Continuous conduction mode (CCM) PFC

Fixed frequency
ICE2PCS02G (65 kHz)
ICE2PCS03G (100 kHz)

Adjustable frequency
ICE2PCS01G (50 - 250 kHz)
ICE2PCS05G (20 - 250 kHz)
ICE3PCS01G (OVP+brown-out)
ICE3PCS02G (OVP)
ICE3PCS03G (Brown-out)

Critical conduction mode (CrCM) PFC

IRS2505L

PWM controller

Stand-alone PWM

Fixed frequency
ICE5GSAG (125 kHz)
ICE5ASAG (100 kHz)
ICE3AS03LJG (100 kHz)
ICE3BS03LJG (65 kHz)
XDPS21071 (140 kHz)

Quasi-resonant
ICE5QSBG
ICE2QS02G
ICE2QS03G
XDPS21081

Half-bridge and LLC resonant
ICE1HS01G-1
ICE2HS01G
XDPS2201

Fixed frequency (FF) CoolSET™

650 V F3/F3R CoolSET™
ICE3Axx65ELJ
ICE3RBRxx65JZ
ICE3RBRxx65JG

700 V Gen5 CoolSET™
ICE5AR4770AG
ICE5AR4770BZS

800 V CoolSET™
ICE5A/GRxx80AG
ICE5ARxx80BZS
ICE3A/BRxx80JZ
ICE3ARxx80CJZ
ICE3ARxx80VJZ
ICE3ARxx80JG

Combi (PFC+PWM)

CrCM + LLC
XDP™ SMPS IDP2309 (DSO-14)
XDP™ SMPS IDP2303A (DSO-16)

Quasi-resonant (QR) CoolSET™

650 V CoolSET™
ICE2QRxx65(Z)/(G)

800 V CoolSET™
ICE2QRxx80Z/G
ICE5QRxx80BG

*For more information on the product, contact our product support

For more details on the product, click on the part number or contact our product support.

Continuous conduction mode (CCM) PFC ICs

High efficiency and very low system cost

Compared to the first generation of ICE1PCS01/02, the second generation of CCM PFC controller ICs, ICE2PCS01/02, have lower internal reference trimmed at 3V. They also have other advantages such as wider VCC operating range, improved internal oscillator and additional direct bulk capacitor overvoltage protection. Compared to the first and second generation of ICE1PCS0x and ICE2PCS0x, the third generation CCM PFC have the lowest internal reference trimmed at 2.5 V and integrated digital control voltage loop. They also feature low peak current limit at 0.2 V, adjustable gate switching frequency range from 21 kHz to 100 kHz and able to synchronize with external frequency range from 50 kHz to 100 kHz. They are now able to achieve 95 percent efficiency at full load for all input voltage range.

Application diagram

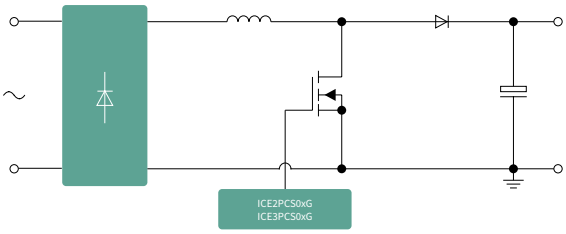

2nd generation continuous conduction mode PFC IC features

- Fulfills class D requirements of IEC 61000-3-2
- Lowest count of external components
- Adjustable and fixed switching frequencies
- Frequency range from 20 to 250 kHz
- Versions with brown-out protection available
- Wide input range supported
- Enhanced dynamic response during load jumps
- Cycle by cycle peak current limiting
- Integrated protections OVP, OCP
- DIP-8 and DSO-8
- Lead-free, RoHS compliant

3rd generation continuous conduction mode PFC IC features

- Fulfills class D requirements of IEC 61000-3-2
- Integrated digital voltage loop compensation
- Boost follower function
- Bulk voltage monitoring signals, brown-out
- Multi protections such as double OVP
- Fast output dynamic response during load jump
- External synchronization
- Extra-low peak current limitation threshold
- SO-8 and SO-14
- Lead-free, RoHS compliant

	ICE2PCS01G ICE2PCS05G	ICE2PCS02G ICE2PCS03G *	ICE3PCS03G	ICE3PCS02G	ICE3PCS01G
Digital control voltage loop	–		✓	✓	✓
Variable frequency	✓	–	✓	✓	✓
Synchronous frequency	–		✓	✓	✓
Open loop protection	✓	✓	✓	✓	✓
Low peak current limit	-1 V	-1 V	-0.4 V	-0.4 V	-0.2 V
Brown-out protection	–	✓	✓	–	✓
Overvoltage protection	✓	✓	✓	✓	✓
Second overvoltage protection	–			✓	✓
PFC enable function	–				✓
Boost follower mode	–				✓
5 V regulator	–				✓

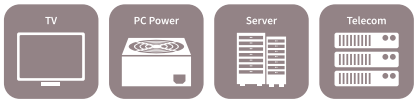

*For more information on the product, contact our product support

For more details on the product, click on the part number or contact our product support.

Critical conduction mode (CrCM) PFC

Easy design and lowest system cost

Fully compatible with the world standard, these devices are optimized to offer extremely compact and cost effective PFC solutions for electronic ballast and off-line SMPS.

Application diagram

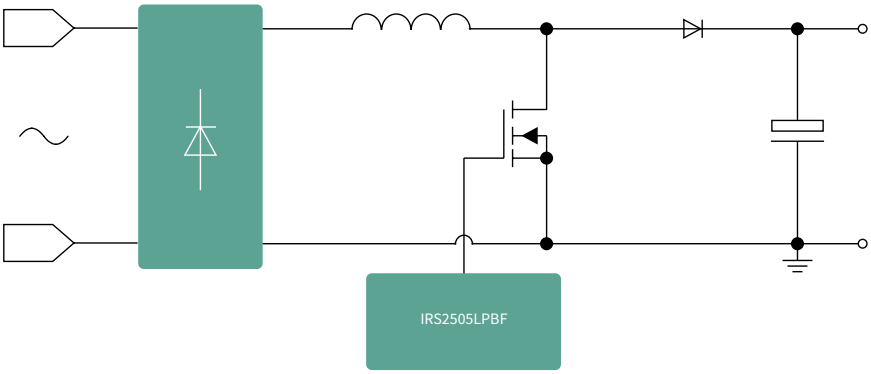

IRS2505LPBF

- Crticial conduction mode PFC control
- High power factor and ultralow THD
- Wide load and line range
- Regulated and programmable DC bus voltage
- No secondary winding required
- MOSFET cycle-by-cycle overcurrent protection
- DC bus overvoltage protection
- Low EMI gate drive
- Ultralow start-up current
- 20.8 V internal Zener clamp on V_{CC}
- Excellent ESD and latch immunity
- RoHS compliant
- 5-pin SOT-23 package

PFC controller portfolio

Critical conduction mode (CrCM) PFC IC portfolio

Product	V_{CC} min.	V_{CC} max.	Package
IRS2505L	9 V	20.8 V	SOT23

Continuous conduction mode PFC ICs

2nd generation continuous conduction mode PFC IC product portfolio

Product	Frequency – f_{SW}	Current drives	Package
ICE2PCS01G	50-250 kHz	2.0 A	DSO-8
ICE2PCS02G	65 kHz	2.0 A	
ICE2PCS03G	100 kHz	2.0 A	
ICE2PCS05G	20-250 kHz	2.0 A	

3rd generation continuous conduction mode PFC IC product portfolio

Product	Frequency – f_{SW}	Current drives	Features	Package
ICE3PCS01G	Adjustable	0.75 A	OVP+brown-out	SO-14
ICE3PCS02G		0.75 A	OVP	SO-8
ICE3PCS03G		0.75 A	Brown-out	SO-8

*For more information on the product, contact our product support

For more details on the product, click on the part number or contact our product support.

5th generation fixed frequency PWM IC and CoolSET™

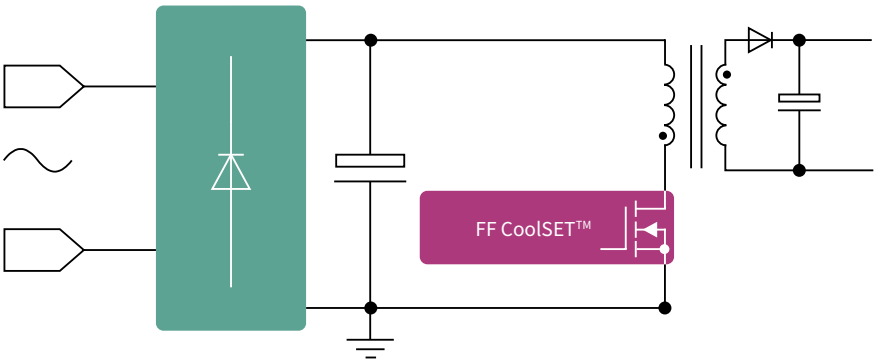

- Integrated CoolMOS™ in both 700 V and 800 V MOSFET
- Cascode configuration for brown-in protection, fast and robust start-up
- Available in both 100 kHz and 125 kHz fixed switching frequency
- Frequency reduction in tandem with load reduction to increase efficiency
- Selectable active burst mode entry/exit profile to optimize standby power and ability to disable
- Support CCM flyback operation with in-build slope compensation
- Integrated error amplifier for direct feedback (e.g. non-isolated flyback)
- Adjustable line input overvoltage protection (only ICE5xRxxxxAG)
- V_{CC} pin short-to-ground protection
- Auto restart protection mode to minimize interruption to operation
- DSO-8 package (standalone controller), DIP-7 and DSO-12 package for CoolSET™

Halogen-Free RoHS

5th generation fixed frequency CoolSET™

Output power[1] 85 V_{AC}~300 V_{AC} T_a=50°C		15 W	23 W	27 W	40 W
$R_{DS(on)}$ max		5.18 Ω	2.35 Ω	1.75 Ω	0.80 Ω
700 V	DIP-7	ICE5AR4770BZS			
	DSO-12	ICE5AR4770AG			
800 V	DIP-7	ICE5AR4780BZS			ICE5AR0680BZS
	DSO-12	ICE5GR4780AG	ICE5GR2280AG	ICE5GR1680AG	ICE5AR0680AG

3rd generation fixed frequency CoolSET™

Output power[1] 85 V_{AC}~300 V_{AC} T_a=50°C		10~15 W	19~21 W	23~26 W	30~34 W	37~41 W
$R_{DS(on)}$ max		11.1~5.44 Ω	3.42~2.62 Ω	1.96~1.71 Ω	1.11~1.05 Ω	0.75~0.71 Ω
650 V	DIP-7	ICE3RBR4765JZ		ICE3RBR1765JZ		ICE3RBR0665JZ
	DIP-8	ICE3BR4765J	ICE3A1065ELJ	ICE3BR1765J	ICE3A2065ELJ	ICE3BR0665J
	DSO-12	ICE3RBR4765JG		ICE3RBR1765JG		ICE3RBR0665JG
800 V	DIP-7	ICE3AR4780JZ	ICE3AR2280JZ	ICE3AR1580VJZ	ICE3AR1080VJZ	ICE3AR0680JZ
		ICE3AR4780VJZ	ICE3BR2280JZ			ICE3BR0680JZ
		ICE3AR4780CJZ	ICE3AR2280VJZ			ICE3AR0680VJZ
		ICE3AR10080CJZ	ICE3AR2280CJZ			
	DSO-12	ICE3AR4780JG	ICE3AR2280JG		ICE3AR1080JG	

1) Calculated DCM maximum output power in an open-frame design based on T_a=50° C and T_j=125°C without copper area as heatsink

For more details on the product, click on the part number or contact our product support.

Fixed frequency PWM IC

	5th generation		3rd generation	
FF PWM IC	ICE5ASAG	ICE5GSAG	ICE3AS03LJG	ICE3BS03LJG
Package	DSO–8		DSO–8	
Switching frequency	100 kHz	125 kHz	100 kHz	65 kHz
Operating temperature	-40°C~129°C		-25°C~130°C	
Start-up cell	Cascode		✓	
V_{CC} on/off threshold	16 V/10 V		18 V/10.5 V	
Soft start time	12 ms		10 ms	20 ms
Frequency jittering	✓		✓	
Modulated gate drive	✓		✓	
Active burst mode	✓ (3 level selectable)		✓	
Slope compensation for CCM	✓		–	
Frequency reduction	✓		–	
Integrated error amplifier for direct feedback	✓		–	
Adjustable line Input overvoltage protection	✓ with auto restart		–	
Adjustable brown-in protection	✓ with auto restart		–	
V_{CC} pin short-to-ground protection	✓ (no start–up)		–	
V_{CC} undervoltage protection	✓ with auto restart		✓ with auto restart	
V_{CC} overvoltage protection	✓ with auto restart		✓ with latch–up	
Overload /open loop protection	✓ with auto restart		✓ with auto restart	
Overtemperature protection	✓ with auto restart and hysteresis		✓ with latch–up	
External blanking time extension	–		✓ with auto restart	
External protection enable pin	–		✓ with latch–up	

For more details on the product, click on the part number or contact our product support.

Fixed frequency CoolSET™

	700 V CoolSET™	650 V CoolSET™		
	Gen5 ICE5ARxx70AG(BZS)	Gen3 ICE3Axx65ELJ	Gen3R ICE3BRxx65J	Gen3R ICE3RBRxx65JZ(G)
Package	DIP-7, DSO-12	DIP-8		DIP-7, DSO-12
Output power range	15 W	19 W~34 W	15 W~41 W	14 W~39 W
Operating temperature range	-40°C~129°C	-25°C~130°C		-40°C~130°C
Switching frequency	100 kHz	100 kHz	65 kHz	65 kHz
Frequency reduction	✓	–		
Integrated error amplifier	✓	–		
Slope compensation for CCM mode	✓	–		
V_{CC} on/off threshold	16 V/10 V	18 V/10.5 V		
Soft start time	12 ms	20 ms		
Active burst mode selection	3 level	1 level		
V_{CC} pin short-to-ground protection	No start-up	–		
V_{CC} overvoltage protection	Auto restart	Latch	Auto restart	
Overtemperature protection	Auto restart with hysteresis	Latch	Auto restart	
External protection enable pin	-	Latch	Auto restart	
Adjustable brown-in/-out protection	Brown-in only	–		
Adjustable line input overvoltage protection	Only ICE5ARxx70AG	–		
Fast AC reset	–			
Product available	ICE5AR4770AG ICE5AR4770BZS	ICE3A1065ELJ ICE3A2065ELJ	ICE3BR4765J ICE3BR1765J ICE3BR0665J	ICE3RBR4765JZ ICE3RBR1765JZ ICE3RBR0665JZ ICE3RBR4765JG ICE3RBR1765JG ICE3RBR0665JG

	800 V CoolSET™					
	Gen3R ICE3A(B)Rxx80JZ	Gen3R ICE3ARxx80CJZ	Gen3R ICE3ARxx80JG	Gen3R ICE3ARxx80VJZ	Gen5 ICE5ARxx80AG(BZS)	Gen5 ICE5GRxx80AG
Package	DIP–7		DSO–12	DIP–7	DIP–7, DSO–12	DSO–12
Output power range	10 W~40 W	11 W~23 W	14 W~30 W	15 W~39 W	15 W~40 W	15 W~27 W
Operating temperature range	–25°C~130°C		–40°C~130°C		–40°C~129°C	
Switching frequency	100 kHz/65 kHz	100 kHz	100 kHz		100 kHz	125 kHz
Frequency reduction	–				✓	
Integrated error amplifier	–				✓	
Slope compensation for CCM mode	–	✓	–		✓	
V_{CC} on/off threshold	17 V/10.5 V				16 V/10 V	
Soft start time	10 ms				12 ms	
Active burst mode selection	4 level	3 level	4 level		3 level	
V_{CC} pin short-to-ground protection	–				No start–up	
V_{CC} overvoltage protection	Auto restart					
Overtemperature protection	Auto restart with hysteresis					
External protection enable pin	Auto restart	Latch	Auto restart	–		
Adjustable brown-in/-out protection	Auto restart			–	Brown-in only	
Adjustable line input overvoltage protection	–			Auto restart	Only ICE5ARxx80AG	Auto restart
Fast AC reset	–	✓	–			
Product available	ICE3AR10080JZ ICE3AR4780JZ ICE3AR2280JZ ICE3AR0680JZ ICE3BR2280JZ ICE3BR0680JZ	ICE3AR10080CJZ ICE3AR4780CJZ ICE3AR2280CJZ	ICE3AR4780JG ICE3AR2280JG ICE3AR1080JG	ICE3AR4780VJZ ICE3AR2280VJZ ICE3AR1580VJZ ICE3AR1080VJZ ICE3AR0680VJZ	ICE5AR0680AG ICE5AR4780BZS ICE5AR0680BZS	ICE5GR4780AG ICE5GR2280AG ICE5GR1680AG

1) Calculated 85 V_{AC}~300 V_{AC} DCM maximum output power in an open-frame design based on T_a=50°C and T_j=125°C without copper area as heatsink

For more details on the product, click on the part number or contact our product support.

Climate saver systems

Climate saver 80 PLUS® and 80 PLUS® Bronze

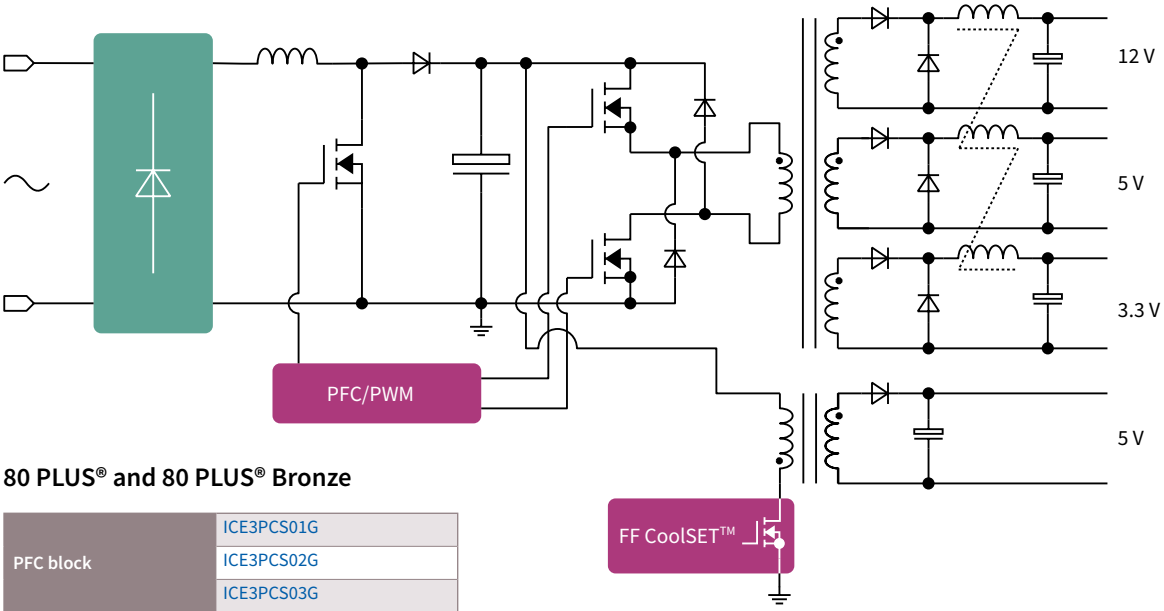

80 PLUS® and 80 PLUS® Bronze

PFC block	ICE3PCS01G
	ICE3PCS02G
	ICE3PCS03G
PWM block	ICE2HS01G
Standby block FF CoolSET™	ICE5GR4780AG
	ICE5GR2280AG
	ICE5GR1680AG
	ICE3AR1080JG
	ICE5AR0680AG

Climate saver 80 PLUS® Silver

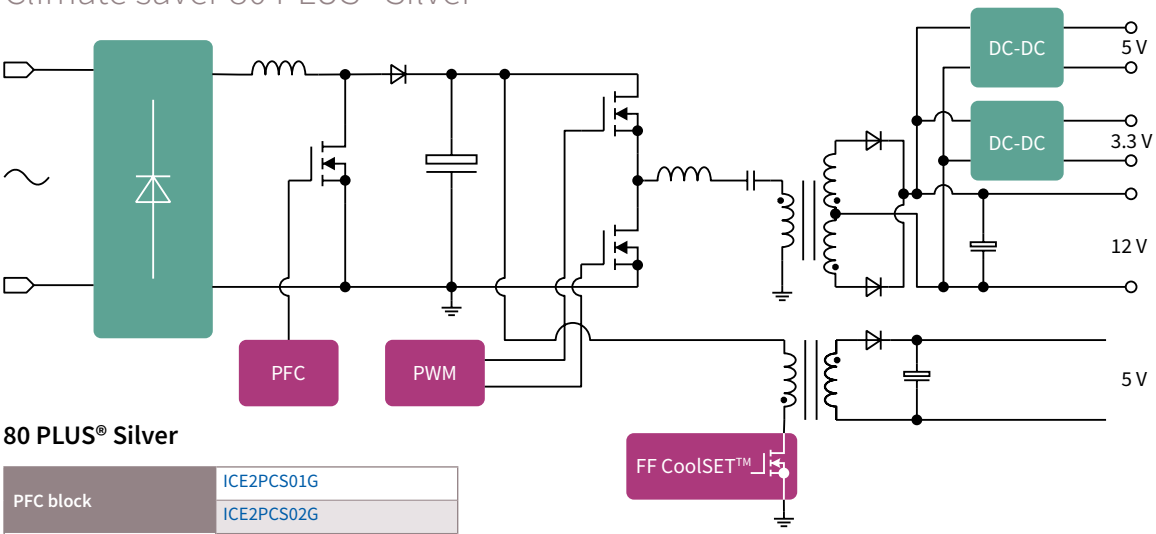

80 PLUS® Silver

PFC block	ICE2PCS01G
	ICE2PCS02G
PWM block	ICE1HS01G-1
Standby block FF CoolSET™	ICE5GR4780AG
	ICE5GR2280AG
	ICE5GR1680AG
	ICE3AR1080JG
	ICE5AR0680AG

For more details on the product, click on the part number or contact our product support.

Climate saver 80 PLUS® Gold

Climate saver 80 PLUS® Platinum

Certification for Infineon's PC power reference design

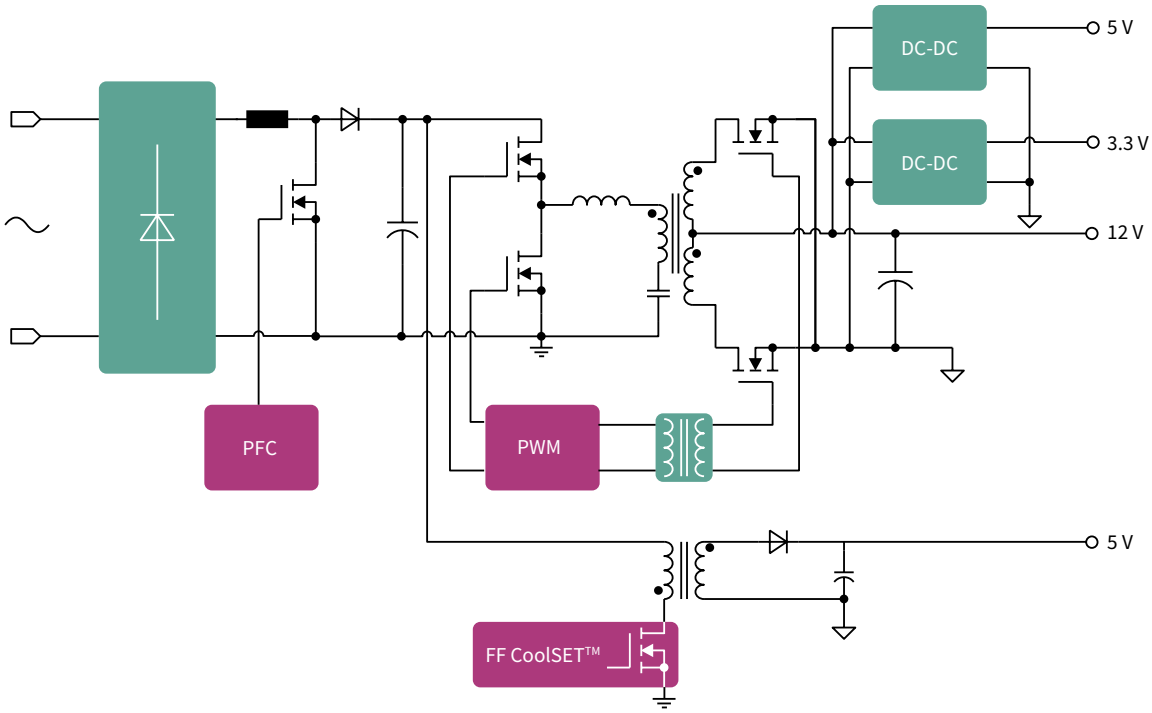

80 PLUS® Gold

PFC block	ICE3PCS01G
	ICE3PCS02G
	ICE3PCS03G
PWM block	ICE2HS01G
Standby block FF CoolSET™	ICE5GR4780AG
	ICE5GR2280AG
	ICE5GR1680AG
	ICE3AR1080JG
	ICE5AR0680AG

80 PLUS® Platinum

Certification for Infineon's PC power reference design

PFC block	ICE3PCS01G
	ICE3PCS02G
	ICE3PCS03G
PWM block	ICE2HS01G
Standby block QR CoolSET™	ICE5QR4780BG
	ICE5QR2280BG
	ICE5QR1680BG
	ICE2QR1080G
	ICE5QR0680BG

For more details on the product, click on the part number or contact our product support.

5th generation quasi-resonant PWM IC and CoolSET™

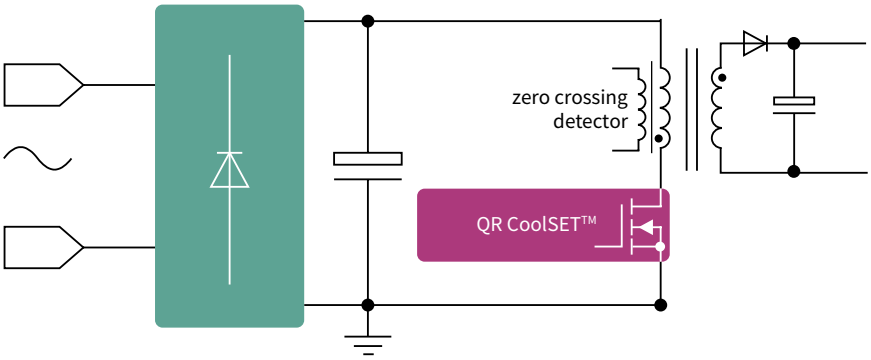

- Integrated CoolMOS™ in 800 V MOSFET with cascode configuration
- Digital frequency reduction with reducing load
- Novel quasi-resonant to minimize the spread of switching frequency between low and high line AC input
- Selectable active burst mode entry/exit profile
- Auto restart mode for line overvoltage protection
- Auto restart mode for brown-out protection
- Auto restart mode for V_{CC} under-/overvoltage protection
- Auto restart mode for open-loop and output overload protection
- Auto restart mode for overtemperature protection with hysteresis
- Auto restart mode for output overvoltage
- Limited charging current during V_{CC} pin short-to-ground protection
- Peak power limitation with input voltage compensation
- Minimum switching frequency limitation (no audible noise on power units on/off)
- DSO package (controller) and DSO-12 (CoolSET™)

Halogen-Free RoHS

5th generation quasi-resonant CoolSET™

Output power[1] 85 V_{AC}~300 V_{AC} T_a=50°C		15 W	22 W	27 W	32 W	41 W~42 W
$R_{DS(on)}$ max		5.18 Ω	2.35 Ω	1.75 Ω	1.25 Ω	0.80 Ω
800 V	DSO-12	ICE5QR4780BG	ICE5QR2280BG	ICE5QR1680BG		ICE5QR0680BG

2nd generation quasi-resonant CoolSET™

Output power[1] 85 V_{AC}~300 V_{AC} T_a=50°C		14 W~15 W	20 W~21 W	23 W~26 W	31 W	38 W~42 W
$R_{DS(on)}$ max		5.44 Ω ~ 5.18 Ω	2.62 Ω	1.96 Ω	1.11 Ω	0.75 Ω~0.71 Ω
650 V	DIP-7	ICE2QR4765Z		ICE2QR1765Z		ICE2QR0665Z
	DIP-8	ICE2QR4765		ICE2QR1765		ICE2QR0665
	DSO-12	ICE2QR4765G		ICE2QR1765G		ICE2QR0665G
800 V	DIP-7		ICE2QR2280Z			ICE2QR0680Z
	DSO-12	ICE2QR4780G	ICE2QR2280G ICE2QR2280G-1		ICE2QR1080G	

[1] Calculated maximum output power in an open frame design at T_a=50°C, T_j=125°C and without copper area as heat sink

For more details on the product, click on the part number or contact our product support.

Quasi-resonant PWM IC

Feature	ICE5QSBG	ICE2QS02G	ICE2QS03G
Package	DSO-8	DSO-8	DSO-8
Switching scheme	Novel QR with 10 zero crossing counters	QR with 7 zero crossing counters	QR with 7 zero crossing counters
Operating temperature	-40°C~129°C	-25°C~130°C	-25°C~130°C
Startup cell	Cascode	–	✓
V_{CC} on/off	16 V/10 V	12 V/11 V	18 V/10.5 V
Power saving during standby	✓ active burst mode in QR switching 2-level selectable burst mode entry/exit level	–	✓ active burst mode 52 kHz
Digital frequency reduction for high average efficiency	✓	✓	✓
OLP blanking time	Fixed	Adjustable	Fixed
Auto restart timer	Through V_{CC} charging/discharging	Setting with external components	Through V_{CC} charging/discharging
Maximum input power limitation	V_{in} pin voltage dependent	Adjustable through ZC resistor	Adjustable through ZC resistor
V_{CC} undervoltage protection	✓ with auto restart	✓ with latch	✓ with auto restart
Adjustable output overvoltage protection	✓ with auto restart	✓ with latch	✓ with latch
Adjustable line input overvoltage protection	✓	–	–
Brown-out feature	✓	✓	–
V_{cc} pin short-to-ground protection	✓	–	–
Target application	Home appliances, set-top-box, AUX SMPS	AUX power supply to V_{CC} eg. LCD TV multi/main, audio main, PDP TV multi/address	Self-power supply to V_{CC} eg. smart meter, industrial applications

Quasi-resonant CoolSET™

Feature	2nd generation ICE2QRxxxxZ/G	2nd generation ICE2QRxx80G-1	5th generation ICE5QRxxxxBG
Switching scheme	QR with 7 zero crossing counters		Novel QR with 10 zero crossing counters
Integrated MOSFET	650 V and 800 V	800 V	700 V and 800 V
High voltage start-up cell	✓		Cascode
Power saving during standby	Active burst mode f_{SW} @ 52 kHz		2 level selectable active burst mode quasi-resonant
V_{CC} on/off threshold (typ.)	18 V/10.5 V	18 V/9.85 V	16 V/10 V
Adjustable output overvoltage protection	✓ with latch		✓ with auto restart
V_{CC} over/undervoltage protection	✓ with auto restart		✓ with auto restart
Overload/open loop protection	✓ with auto restart		✓ with auto restart
Overtemperature protection	✓ with auto restart		✓ (Auto restart with hysteresis)
Adjustable line input overvoltage protection	–		✓ with auto restart
Brown-out	–		✓ with auto restart
V_{CC} pin short to ground	–		✓ (No start-up)
Package	DIP-7 DIP-8 DSO-12	DIP-7 DSO-12	DIP-7 DSO-12

For more details on the product, click on the part number or contact our product support.

Resonant LLC half-bridge controller ICs

Best-in-class converters and controllers to support LLC HB resonant mode topology

Resonant mode power supplies are a variation over SMPS circuits where the switching losses are significantly reduced by adapting zero-voltage or zero-current switching techniques, also known as soft-switching technique. In non-resonant mode SMPS circuits, the switches are subjected to hard switching. LLC HB resonant operates under the ZVS mode, whereby switching loss is reduced to operate converter at a higher switching frequency. In addition, the converter can be further optimized at a high input voltage. This topology allows to eliminate the secondary filter inductor, adopt better rectifier diodes and reduce secondary conduction loss. The converter utilizes leakage and magnetizing inductance of a transformer. With magnetic integration concept, all the magnetic components can be built in one magnetic core.

LLC resonant (no SR)

Application diagram – LLC resonant (no SR)

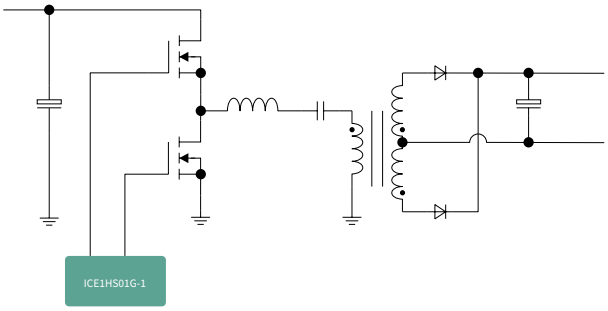

- Novel and simple design (12 components + HB driver)
- Minimum operating frequency is adjustable externally
- Burst mode operation for output voltage regulation during no load and/or bus overvoltage
- Multiple protections in case of fault
- Input voltage sense for brown-out protection
- Open loop/overload fault detection by FB pin with auto restart and adjustable blanking/restart time
- Frequency shift for overcurrent protection
- Lead-free, RoHS compliant package
- DSO-8 package

Resonant LLC half-bridge controller IC with integrated synchronized rectifier control

LLC resonant + SR

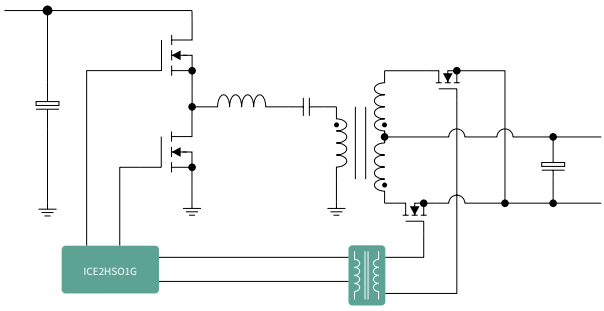

- Novel LLC/SR operation mode and controlled by primary side controller
- Multiple protections for SR operation
- Tight tolerance control
- Accurate setting of switching frequency and dead time
- Simple system design
- Optimized system efficiency
- Multiple converter protections: OTP, OLP, OCP, latch-off enable
- External disable for either SR switching or HB switching
- Lead-free, RoHS compliant package
- DSO-20 package

LLC half-bridge controller IC	ICE1HS01G-1	ICE2HS01G
Package	DSO-8	DSO-20
Switching frequency range	up to 600 kHz	up to 1 MHz
LLC soft start	✓	✓
LLC burst mode	✓	✓
Adjustable minimum frequency	✓	✓
Overload/open loop protection	✓	✓
Mains undervoltage protection with hysteresis	✓	✓
Overcurrent protection	2-level	3-level
Drive signal for synchronous rectification	–	✓
Adjustable dead time	–	✓
External latch-off and OTP	–	✓
Target application	LCD-TV, audio, etc.	Server, PC, LCD-TV, etc.

Product		Frequency – f_{sw}	Dead time	Current drives	Package
ICE1HS01G-1	LLC resonant (no SR)	30 kHz~600 kHz	380 ns	1.5 A	DSO-8
ICE2HS01G	Resonant LLC half-bridge controller IC with integrated synchronized rectifier control (LLC resonant + SR)	30 kHz~1 MHz	100~1000 ns	0.3 A	DSO-20

* S/R = primary side controlled synchronous rectification

For more details on the product, click on the part number or contact our product support.

DC-DC converters

Highest density end-to-end power management solutions

As the innovation leader for power semiconductor and energy efficiency technologies, we are continually developing and working on the best solutions for your applications. Our DC-DC converter portfolio includes integrated power stages, switching regulators, integrated POL converters and integrated POL voltage regulators, as well as digital multiphase controllers (see DC-DC digital multiphase controllers)

For more details on the product, click on the part number or contact our product support.

OptiMOS™ Powerstage

60 A and 70 A integrated power stages with integrated current and temperature telemetry

Infineon's integrated OptiMOS™ Power stage family contains a synchronous buck gate driver IC which is co-packed with control and synchronous MOSFETs and a Schottky diode to further improve efficiency. The package is optimized for PCB layout, heat transfer, driver/MOSFET control timing, and minimal switch node ringing when layout guidelines are followed. The paired gate driver and MOSFET combination enables higher efficiency at lower output voltages required by cutting edge CPU, GPU, ASIC, and DDR memory designs. The TDA21472 integrated power stages internal MOSFET current sense algorithm, with integrated temperature compensation, achieves superior current sense accuracy versus best-in-class controller-based inductor DCR sense methods. Up to 1.0 MHz switching frequency enables high-performance transient response, allowing miniaturization of output inductors, as well as input and output capacitors while maintaining industry-leading efficiency. The TDA21472 is optimized for CPU core power delivery in server applications. The ability to meet the stringent requirements of the server market also makes the TDA21472 ideally suited for powering GPU, ASIC, DDR memory, and other high current designs.

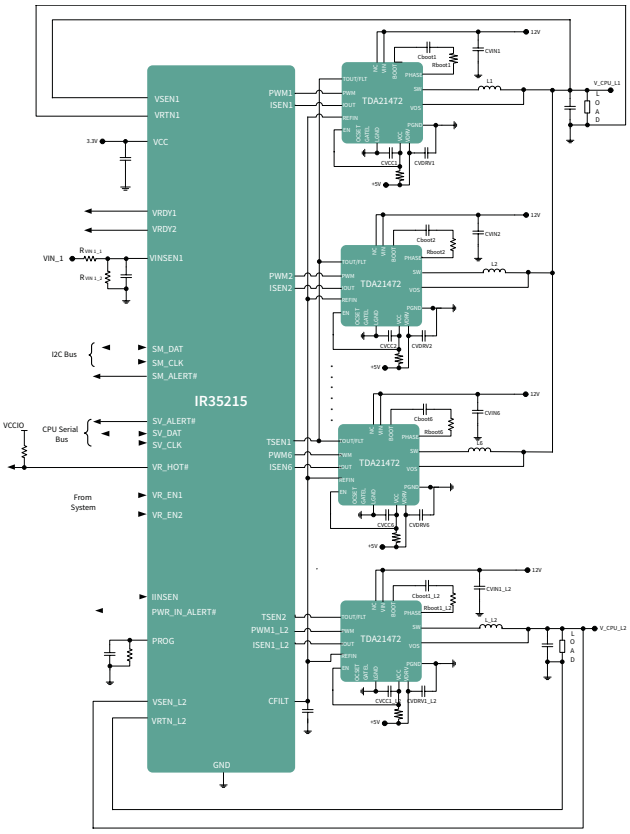

Features

- Integrated driver, Schottky diode, control MOSFET and synchronous MOSFET
- 5 mV/A on-chip MOSFET current sensing with temperature compensated reporting
- Input voltage (V_{in}) range of 4.5 to 15 V
- V_{CC} and V_{DR} V supply of 4.5 to 7 V
- Output voltage range from 0.25 up to 5.5 V
- Output current capability of 70 A
- Operation up to 1.0 MHz
- V_{CC} undervoltage lockout (UVLO)
- 8 mV/°C temperature analog output and thermal flag pull-up to 3.3 V
- Overtemperature protection (OTP)
- Cycle-by-cycle self-preservation overcurrent protection (OCP)
- MOSFET phase fault detection and flag
- Preliminary overvoltage protection (pre-OVP)
- Compatible with 3.3 V tri-state PWM input
- Body-Braking™ load transient support through PWM tri-state
- Diode emulation mode (DEM) for improved light-load efficiency
- Efficient dual-sided cooling
- Small 5.0 x 6.0 x 0.9 mm PQFN package

Applications

- High frequency, high current, low profile DC-DC converters
- Voltage regulators for CPUs, GPUs, ASICs, and DDR memory arrays

Part type	Package	I_{out} [A]	V_{in} [V]	V_{out} [V]	Switching frequency [MHz]
TDA21472	5 x 6 x 0.9 mm PQFN	70	4.5 to 15	0.25 to 5.5	1.0
TDA21462 *	5 x 6 x 0.9 mm PQFN	60	4.5 to 15	0.25 to 5.5	1.0

Voltage regulators

DC/DC Converter

*For more information on the product, contact our product support

For more details on the product, click on the part number or contact our product support.

OptiMOS™ Powerstage

70 A power stage with exposed top for improved thermal performance

Infineon's TDA21475 exposed-top power stage contains a low quiescent-current synchronous buck gate driver IC co-packaged with high-side and low-side MOSFETs. The package is optimized for PCB layout, heat transfer, driver/MOSFET control timing, and minimal switch node ringing when layout guidelines are followed. The gate driver and MOSFET combination enables higher efficiency at the lower output voltages required by cutting-edge CPU, GPU, and DDR memory designs. The TDA21475 internal MOSFET current sense algorithm with temperature compensation achieves superior current sense accuracy versus best-in-class controller-based inductor DCR sense methods. Protection includes cycle-by-cycle over current protection with programmable threshold, V_{CC}/V_{DRV} UVLO protection, bootstrap capacitor un- dervoltage protection, phase fault detection, IC temperature reporting, and thermal shutdown. The TDA21475 also features auto replenishment of the bootstrap capacitor to prevent over-discharge. The TDA21475 features a deep-sleep power-saving mode, which greatly reduces the power consumption when the multiphase system enters PS3/PS4 mode. Operation at switching frequency as high as 1.5 MHz enables high-performance transient response, allowing reduction of output inductance and output capacitance while maintaining industry-leading efficiency. The TDA21475 is optimized for CPU core power delivery in server applications. The ability to meet the stringent requirements of the server market also makes the TDA21475 ideally suited for powering GPU and DDR memory designs.

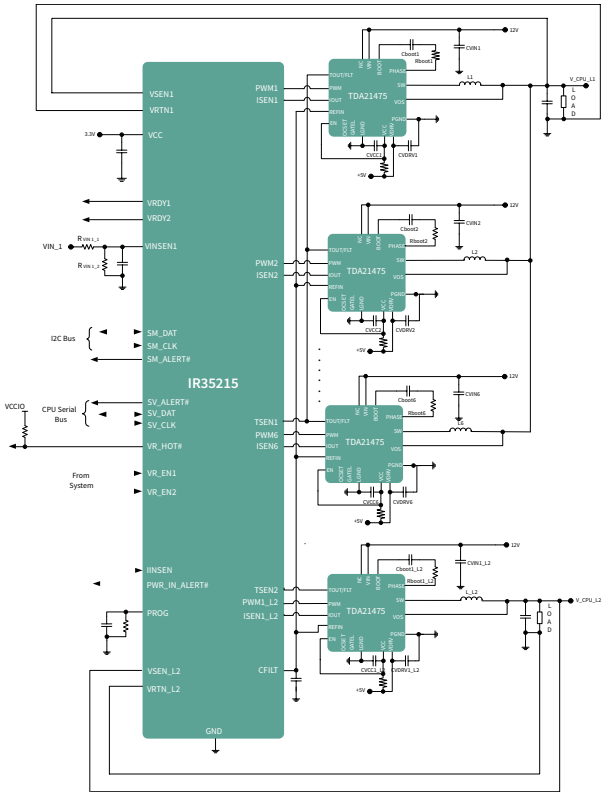

Features

- Co-packaged driver, high-side and low-side MOSFETs
- 5 mV/A on-chip MOSFET current sensing with temperature compensated reporting Input voltage (V_{IN}) range of 4.25 to 16 V
- V_{CC} and V_{DRV} supply of 4.25 to 5.5 V
- Output voltage range from 0.25 up to 5.5 V output current capability of 70 A operation up to 1.5 MHz
- V_{CC}/V_{DRV} undervoltage lockout (UVLO) Bootstrap capacitor undervoltage protection 8 mV/°C temperature analog output
- Thermal shutdown and fault flag
- Cycle-by-cycle over current protection with programmable threshold and fault flag MOSFET phase fault detection and flag
- Auto replenishment of bootstrap capacitor Deep-sleep mode for power saving Compatible with 3.3 V tri-state PWM input Body-Braking™ load transient support Small 5 x 6 x 0.65 mm PQFN package
- Lead-free RoHS compliant package
- Integrated driver, Schottky diode, control MOSFET and synchronous MOSFET

Applications

- High frequency, high current, low profile DC-DC converters
- Voltage regulators for CPUs, GPUs, ASICs, and DDR memory arrays

Part type	Package	I_{out} [A]	V_{in} [V]	V_{out} [V]	Switching frequency [MHz]
TDA21475 *	5 x 6 x 0.9 mm PQFN	70	4.25 to 16	0.25 to 5.5	1.5

*For more information on the product, contact our product support

OptiMOS™ Powerstage

20 A power stage with integrated current sense

Infineon's IR35401 integrated power stage contains a synchronous buck gate driver IC, which is co-packaged with control and synchronous MOSFETs and Schottky diode to further improve efficiency. The package is optimized for PCB layout, heat transfer, driver/MOSFET control timing, and minimal switch node ringing when layout guidelines are followed. The paired gatedriver and MOSFET combination enables higher efficiency at lower output voltages required by cutting edge CPU, GPU and DDR memory designs. The IR35401 power stage features an integrated current sense amplifier to achieve superior current-sense accuracy against best-in-class controller-based inductor DCR sense methods while delivering the clean and accurate current report information. The protection features inside IR35401 include VCC UVLO and thermal flag. IR35401 also features an auto replenishment of bootstrap capacitor to prevent the bootstrap capacitor from overdischarging. The IR35401 supports deep-sleep mode and consumes <100 µA VCC bias current when the EN pin is pulled low. Up to 1.5 MHz switching frequency enables high performance transient response, allowing miniaturization of output inductors, as well as input and output capacitors while maintaining industry-leading efficiency. When combined with Infineon's digital controllers, the IR35401 incorporates the Body-Braking™ feature through PWM tri-state which enables reduction of output capacitors. The IR35401 is optimized for low current CPU rails in server applications. The ability to meet the stringent requirements of the server market also makes the IR35401 ideally suited for powering GPU and DDR memory rails.

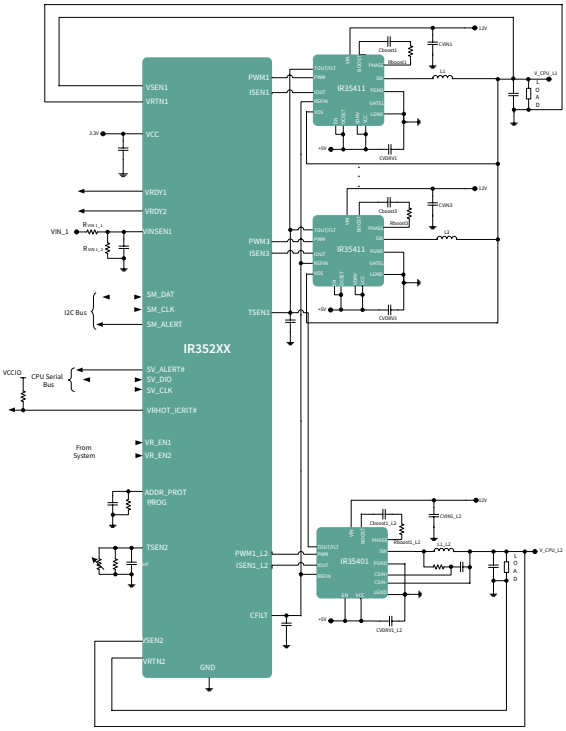

Applications

- General purpose POL DC-DC converters
- Voltage regulators for CPUs, GPUs, ASICs, and DDR memory arrays

Features

- Integrated driver, control MOSFET and synchronous MOSFET
- Integrated bootstrap synchronous PFET
- Inductor DCR current sensing with temperature compensation
- Input voltage (V_{IN}) range from 4.25 to 16 V
- V_{CC} supply of 4.25 to 5.5 V
- Output voltage range from 0.5 to 3 V or up to 5.5 V if the internal current sense amplifier is not used
- Local lossless inductor current sensing with improved noise immunity and accuracy
- Single reference based current reporting output
- Output current capability of 20 A
- Operation up to 1.5 MHz
- V_{CC} undervoltage lockout
- Over-temperature and VCC UVLO fault communication to controller via TOUT pin
- Compatible with 3.3 V tri-state PWM Input
- Body-Braking™ load transient support through PWM tri-state
- Auto-replenishment on BOOST pin
- Low operating quiescent current and <100 µA when disabled
- Small 4 x 5 x 0.9 mm PQFN package
- Lead-free RoHS compliant package

Part type	Package	I_{out} [A]	V_{in} [V]	V_{out} [V]	Switching frequency [MHz]
IR35401 *	4 x 5 x 0.9 mm PQFN	20	4.25 to 16	0.5 to 5.5	1.5

Voltage regulators

DC/DC Converter

*For more information on the product, contact our product support

OptiMOS™ Powerstage

25 A, 35 A, 40 A integrated power stages with highest efficiency on smallest form factor

Infineon's TDA21240 powerstage is a multichip module that incorporates Infineon's premier MOSFET technology for a single high-side and a single low-side MOSFET coupled with a robust, high performance, high switching frequency gate driver in a single PG-IQFN-30-2 package. The optimized gate timing allows for significant light load efficiency improvements over discrete solutions. When combined with Infineon's family of digital multi-phase controllers, the TDA21240 forms a complete core voltage regulator solution for advanced micro and graphics processors as well as point-of-load applications.

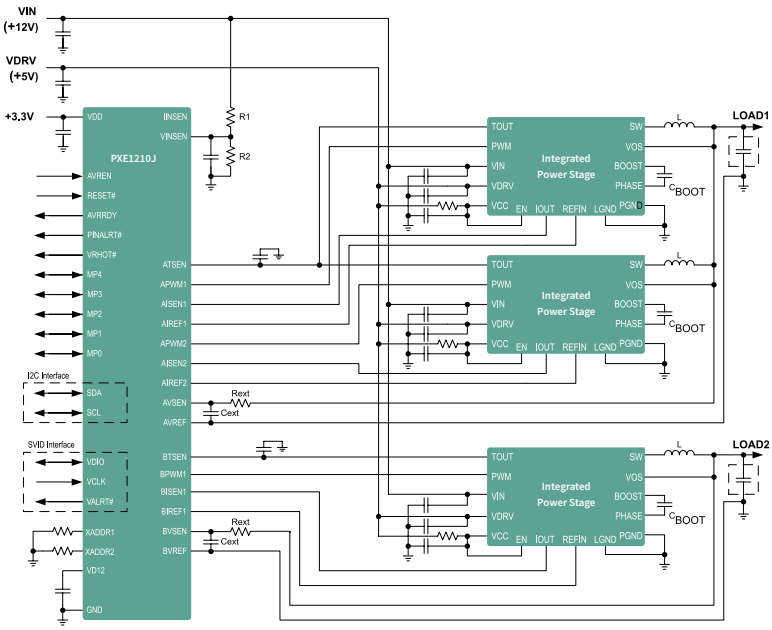

Features

- For synchronous buck converter step down voltage applications
- Maximum average current of 40 A
- Input voltage range +4.5 V to +16 V
- Power MOSFETs rated 25 V
- Fast switching technology for improved performance at high switching frequencies (> 500 kHz)
- Remote driver disable function
- Includes bootstrap diode
- Undervoltage lockout
- Shoot through protection
- +5 V high side and low side MOSFETs driving voltage
- Compatible to standard +3.3 V PWM controller integrated circuits
- Tri-state PWM input functionality
- Small package: PG-IQFN-30-2 (4 x 4 x 1 mm)
- RoHS compliant
- Thermal warning

Applications

- Desktop and server VR buck converter
- Single-phase and multiphase POL
- CPU/GPU regulation in notebook, desktop graphics cards, DDR memory, graphic memory
- High power density voltage regulator modules (VRM)
- Qualified for DC-DC industrial applications based on JEDEC (JESD47, JESD22, J-STD20)
- General purpose POL DC-DC converters

Part type	Package	I_{out} [A]	V_{in} [V]	Switching frequency [MHz]
TDA21242	4 x 4 x 1 mm PQFN	25	4.5 to 16	1.0
TDA21241	4 x 4 x 1 mm PQFN	35	4.5 to 16	1.0
TDA21240	4 x 4 x 1 mm PQFN	40	4.5 to 16	1.0

For more details on the product, click on the part number or contact our product support.

DC-DC converters

Robust range of controllers and regulators for the widest application spectrum

Our high-efficiency switching regulators and controllers help to reduce energy consumption. In addition to extending the operating time of battery powered systems, they also significantly improve the thermal budget of the application. Overall, this translates into minimal operating costs. For your design flexibility, they are available as adjustable voltage variants as well as with dedicated fixed output voltage values.

IFX91041 block diagram

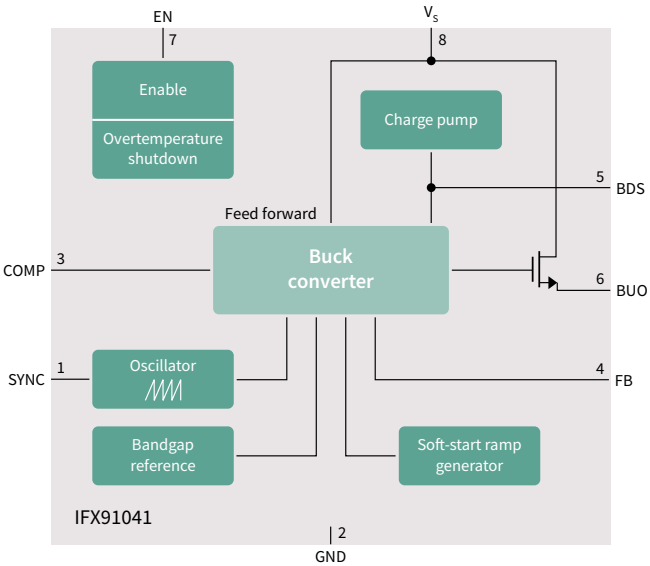

Industrial DC-DC buck regulators (selection tree)

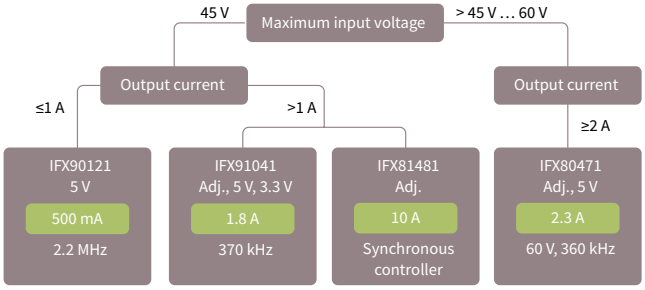

Features and benefits

Key features
› Input voltage up to 60 V
› Output currents going from 500 mA up to 10 A
› Switching frequencies ranging from 100 kHz to 2.2 MHz
› Shutdown quiescent current down to below 2 µA
› Current limitation and overtemperature protection
› Enable feature

Key benefits
› High-efficiency regulation
› Only a few external components needed for stable regulation
› Perfectly suited for regulation in pre-/post-regulation power supply architectures

DC-DC converters

Part number	V_Q (multiple)	Output current type	Output current [A]	Product features	Package
IFX81481ELV	Adjustable	Buck controller	10.0	10 A synchronous DC-DC adjustable step down controller; f = 100 kHz-700 kHz, N	PG-SSOP-14
IFX90121EL V50	5.0 V	Buck converter	0.5	V_{in} up to 45 V, 2.2 MHz step-down regulator with low quiescewnt current	PG-SSOP-14
IFX80471SK V	Adjustable	Buck controller	2.3	V_{in} up to 60 V; V_Q adjustable from 1.25 V up to 15 V; external MOSFET	PG-DSO-14
IFX80471SK V50	5.0 V	Buck controller	2.3	V_{in} up to 60 V; external MOSFET	PG-DSO-14
IFX91041EJV	Adjustable	Buck converter	1.8	V_Q adjustable from 0.6 V up to 16 V; tolerance 2% up to 1000 mA	PG-DSO-8
IFX91041EJ V33	3.3 V	Buck converter	1.8	V_Q fixed to 3.3 V; tolerance 2% up to 1000 mA	PG-DSO-8
IFX91041EJ V50	5.0 V	Buck converter	1.8	V_Q fixed to 5.0 V; tolerance 2% up to 1000 mA	PG-DSO-8

For more details on the product, click on the part number or contact our product support.

Integrated POL voltage regulators

Highest density high efficiency integrated POL (IPOL) for smart enterprise systems

Infineon's integrated POL switching converters deliver benchmark efficiency and dramatically reduce system size. Solutions up to 35 A are available in compact PQFN packages. Target applications include server, storage, routers and switches, telecom base stations, digital home media, mobile computing and embedded data processing. Solutions with and without PMBus™ digital communication are available in single output and multi-rail format.

Point-of-load products – how to choose

DC-DC products
1 to 35 A

PMBus™ digital IPOL

IPOL with digital interface

- Telemetry
- Margining
- Intel SVID Support
- Parallel VID
- IR3806x: 6-35 A with PMBus™
- IR3816x: 15 A, 30 A with PMBus™ and Intel SVID
- IR38263: 30 A with PVID and PMBus™

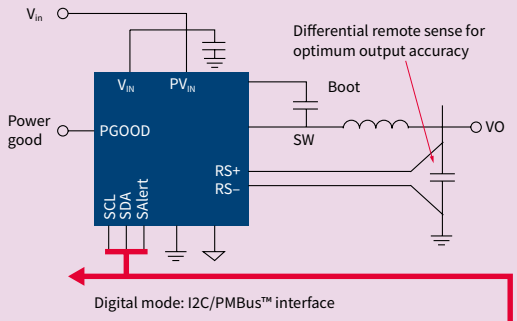

PMBus™ IC capabilities

Inventory	Device ID
Configuration	On/off configuration fault/warnings
Control	Sequencing delay/ramp fault response
Telemetry	V_{out}, I_{out}, power temperature, peak values
Status	Comms, data, temps

Constant on-time IPOL

Easy/light-load efficiency
IR3883MTRPBF (3 A), IR3888MTRPBF (25 A), IR3889MTRPBF (30 A), IR3887MTRPBF * (30 A)

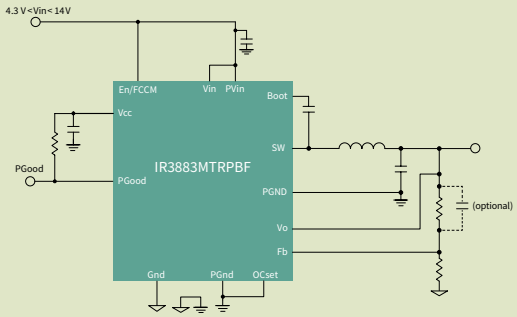

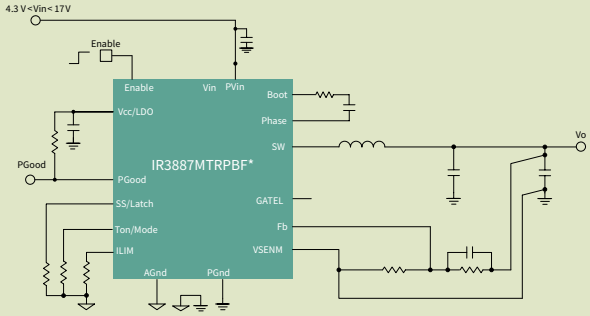

Ready-to-go reference designs and the on-line PowerDesk simulator simplify the task of designing regulated voltage rails. Different control topologies are available to meet an application's specific requirements.

*Coming soon

Integrated point-of-load converters IR3806x series (6 A/15 A/25 A/35 A)

Digital interface IPOL voltage regulators

The digital interface IPOL devices are easy-to-use, fully integrated and highly efficient DC-DC regulator offering I2C/PMBus™, parallel VID, Intel SVID. The on-board PWM controller and MOSFETs make the family a space-efficient solution, providing accurate power delivery for low output voltage and high current applications.

The IR3806x family of PMBus™ enabled IR MOSFET™ IPOL based IR MOSFET IPOL voltage regulators offers:

- Compactness of integrated controller, driver and MOSFETs
- High performance analog voltage mode engine
- Flexibility of a rich PMBus™ interface

The IR381(2/3)6x family features OptiMOS™ 5 for the highest efficiency and adds Intel SVID support (IR381(/3)6x) for Intel based systems or parallel VID (IR3826x) for voltage scaling or 8 programmable output voltages booting options to avoid programming at start up. Pin compatible options with and without PMBus™ are available to allow the flexibility of using PMBus™ only during evaluation or easily upgrade a system to PMBus™ without re-layout.

Features and benefits

Key features
PMBus™ revision 1.2 compliant
≥ 66 PMBus™ commands
Wide input voltage range and single 5 V – 16 V input operations
Differential remote sense
Ultralow jitter voltage mode eingine
Operation temp: -40° to 125° C

Key benefits
Only single chip solution with extensive PMBus™, parallel VID, Intel SVID support allows 50 percent space saving versus external power competition
Intel SVID support for Intel-based systems
Parallel VID or PMBus™ for voltage setting and margining
Telemetry status via digital bus
Remote monitoring and update
Parameter changes by register
Flexible sequencing
High accuracy low ripple
Integrated sequencing, margin, current and voltage monitoring

Digital interface IPOL

Part number	Max. current [A]	Package size [mm]	Max. V_{in}	Max. f_{sw}	Distinctive features
IR38064MTRPBF	35	5 x 7	21 V	1500 KHz	PMBus™
IR38063M	25	5 x 7	21 V	1500 KHz	
IR38062M	15	5 x 7	21 V	1500 KHz	
IR38060M	6	5 x 6	16 V	1500 KHz	
IR38163M	30	5 x 7	16 V	1500 KHz	OptiMOS™ 5, SVID + PMBus™
IR38165M	30	5 x 7	16 V	1500 KHz	OptiMOS™ 5, SVID
IR38363M	15	5 x 7	16 V	1500 KHz	OptiMOS™ 5, SVID + PMBus™
IR38365M	15	5 x 7	16 V	1500 KHz	OptiMOS™ 5, SVID
IR38263M	30	5 x 7	16 V	1500 KHz	OptiMOS™ 5, PVID + PMBus™
IR38265M	30	5 x 7	16 V	1500 KHz	OptiMOS™ 5, PVID
IR38164M	30	5 x 7	16 V	1500 KHz	OptiMOS™ 5, SVID + PMBus™, enhanced Imon
IRPS5401M	4+4+2+2+0.5	7 x 7	14 V	1500 KHz	5 output PMIC, PMBus™

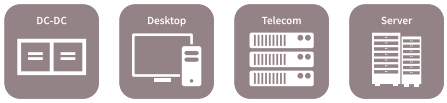

For more details on the product, click on the part number or contact our product support.

OptiMOS™ IPOL voltage regulators with COT

Easy to use with no external compensation and smallest BOM

OptiMOS™ IR3883MTRPBF, IR3887MTRPBF *, IR3889MTRPBF, and IR3888MTRPBF integrated point-of-load DC-DC devices are easy-to-use, fully integrated and highly efficient DC-DC regulators that operate from a wide input voltage range and provide up to 30 A continuous current. The devices increase efficiency and power density and simplify design for POL applications in server, enterprise storage, netcom router and switches, datacom and telecom base stations.

Block diagram IR3883M

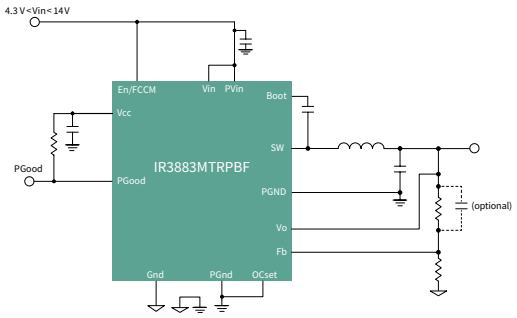

Block diagram IR3887M (30 A)

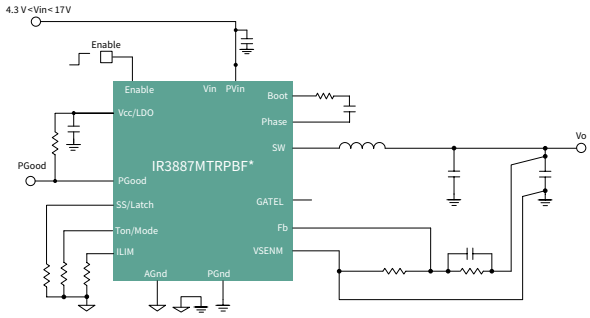

Main benefits

Main benefits
› Compensation free and stable with all ceramic caps
› Scalable solution from 3A up to 40A.
› For designs requiring high density, low cost and easy design, the family includes a 3A device with Enhanced Stability Constant-on-Time (CoT) engine that does not require external compensation enabling easy designs and fast time to market.
› Quiescent current down to 5 µA
› Overload, over temperature, short circuit and reverse-polarity protection
› Low current consumption
› Extended temperature range -40°C ... +125°C

Analog interface IPOL

Part number	Max. current [A]	Package size [mm]	Max. V_{in}	Max. f_{sw}	Distinctive features
IR3883MTRPBF	3	3 x 3	14 V	800KHz	Constant-on-time (COT)
IR3823AMTRPBF	3	3.5 x 3.5	17 V	2000KHz	
IR3899AMTRPBF	9	4 x 5	17 V	2000KHz	
TDA38820	20	4 x 5	17 V	2000KHz	
IR3888MTRPBF	25	5 x 6	17 V	2000KHz	
IR3447AMTRPBF	25	5 x 6	17 V	600KHz	
IR3887MTRPBF	30	4 x 5	17 V	2000KHz	
IR3889MTRPBF	30	5 x 6	17 V	2000KHz	
TDA38840	40	5 x 6	17 V	2000KHz	
IR3846AMTRPBF	40	5 x 7	17 V	600KHz	

*Coming soon

For more details on the product, click on the part number or contact our product support.

OPTIREG™ switcher power supply ICs

High-efficiency solutions for harsh environments

Infineon offers optimized DC-DC converters that are designed specifically for harsh automotive environments. Wide input voltage range, optimized feature set, and extended qualification make our DC-DC converters perfectly suitable for multiple applications. Our DC-DC portfolio contains various products that operate in step-down (buck), step-up (boost), or a combination of those(buck-boost/sepic). High integration, efficiency, and flexibility are the main benefits of our products.

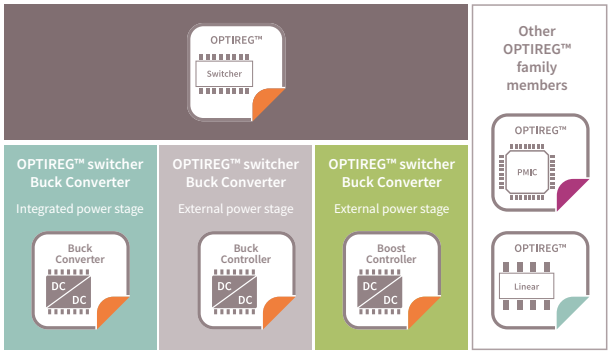

Features and benefits

Key features
› Input voltage up to 60 V
› Output currents going from 500 mA up to 10 A
› Switching frequencies ranging from 100 kHz to 2.2 MHz
› Shutdown quiescent current down to below 2 µA
› Current limitation and overtemperature protection
› Enable feature

Key benefits
› High-efficiency regulation
› Only a few external components needed for stable regulation
› Perfectly suited for regulation in pre-/post-regulation power supply architectures

OPTIREG™ switcher

Product name	Input voltage $V_{S(OP)}$ [V]	Output current [mA]	Quiescent current (EN = ON) [mA]	Output voltage V_O [V]	Synchronous topology	Accuracy [%]	Switching frequency PWM f_{sw} [kHz]	Enable	PFM operation	Reset	Watchdog	Early warning	Package
Buck converter (integrated MOSFET)													
TLE6365	8.00 … 40.00	400	1500	5.00		2	100			●			DSO-8
TLE8366	4.75 … 45.00	1800	7000	Adj., 3.30, 5.00		2(4)	200 … 530	●					DSO-8 EP
TLS4120D0	3.70 … 36.00	2000	0.032	Adj., 3.30, 5.00	●	2	380 … 2800	●	●	●			TSDSO-14 EP
TLS4125D0	3.70 … 36.00	2500	0.032	Adj., 3.30, 5.00	●	2	380 … 2800	●	●	●			TSDSO-14 EP
TLF50281	4.75 … 45.00	500	0.045	5.00		2	800 … 2200	●	●	●	●		SSOP-14 EP
TLF50251	4.75 … 45.00	500	0.045	5.00		2	800 … 2200	●	●	●			SSOP-14 EP
TLF50241	4.75 … 45.00	500	0.045	5.00		2	800 … 2200		●	●			SSOP-14 EP
TLF50211	4.75 … 45.00	500	0.045	5.00		2	800 … 2200	●	●				SSOP-14 EP
TLF50201	4.75 … 45.00	500	0.045	5.00		2	800 … 2200		●				SSOP-14 EP
Buck controller (external MOSFET)													
TLE6389-2GV	5.00 … 60.00	2300	0.120	Adj.		3	250 … 530	●	●	●		●	DSO-14
TLE6389-2GV50	5.00 … 60.00	2300	0.120	5.00		3	250 … 530	●	●	●		●	DSO-14
TLE6389-3GV50	5.00 … 60.00	2300	0.120	5.00		3	250 … 530	●	●	●[1]		●	DSO-14
TLF51801	4.75 … 45.00	Adj. max 10,000	< 2.000 µA	$1.20-D_{max}*V_S$	●	2	100 … 700	●					SSOP-14 EP
Boost controller													
TLE8386-2[2]	4.75 ... 45.00	dep.on V_Q	7000	Adj. (max 9-times of V_S)		4	100 … 500	●					SSOP-14 EP

1) Different voltage reset hysteresis
2) LS-sense-booster

OPTIREG™ linear voltage regulators

Energy-efficient voltage regulators and trackers

Our linear voltage regulators and trackers help to reduce energy consumption, extending operating time and minimizing operating costs across all kinds of systems. The wide supply voltage range, low quiescent current, rich protective feature set and choice of packages make our devices the perfect fit across a broad application spectrum, apart from automation systems as well for heath care, traffic, power tools, lighting and many other multi-market systems. Our trackers are ideal as additional supplies for off-board loads to increase system reliability

OPTIREG™ linear voltage regulators (selection tree)

General purpose

Best suited for supplying
- Microcontrollers
- Tranceivers (CAN, LIN,...)
- Sensors (on-board)
- Actuator ICs
- Stand-by supply
- Low load LEDs
- Microphones

TLE42xxx
TLE44xxx
TLE46xxx
TLE7xxx
TLF4949
TLS71x

Trackers

Best suited for supplying
- Sensors
- Microphones
- Satellite ECUs (off-board)
- Small lamps (LED)
- Protected loads

TLS1xx
TLT1xx
TLE425x

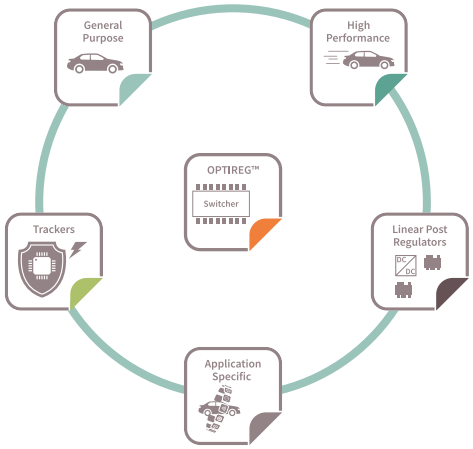

High performance

TLS8xx
TLF80511

Best suited for supplying
- Microcontrollers
- Tranceivers (CAN, LIN,...)
- Sensors (on-board)
- Actuator ICs
- Stand-by supply

Post regulators

TLS2xx
TLF1963

Best suited for supplying
- Radar (MMIC)
- Flash Memory
- RAM Memory
- Camera
- SoC core supply
- I/O supply
- Ethernet PHY
- Cluster supply
- Low noice supply

Application specific

TLF4277x
TLT807
TLE447xx

Best suited for supplying
- Radar (MMIC)
- Flash Memory
- RAM Memory
- Camera
- SoC core supply
- I/O supply
- Ethernet PHY
- Cluster supply
- Low noice supply

Features and benefits

Key features	Key benefits
› Input voltage up to 60 V	› Pin-to-pin compatibility with industry-standard parts
› Output current up to 1.5 A	› Very low dropout voltage trackers for optimized heat distribution and external protection
› Output voltage adjustable or fixed to specific values	› Trackers for maximum system cost reduction
› Quiescent current down to 5 µA	› Small robust packages
› Overload, overtemperature, short circuit and reverse-polarity protection	
› Low current consumption	
› Extended temperature range -40°C ... +125°C	

Infineon's microcontroller families and industrial voltage regulators

Microcontroller family	Input voltage [V]	Input current (max.) [mA]	Voltage regulator
XMC1000 family	1.8 to 5.5	<100	TLS810B1EJ, TLS810A1LD, TLE4266-2G, TLS820D3EL
XMC4000 family	3.3	<500/300	TLF80511x, TLE42764D, TLS835D2EL, TLS850FxTA
XC8xx	3.3 to 5.0	200	TLS810A1LD, TLS810B1EJ, TLE42764D, TLE4296-2G
XE166/XC2000	1.5 and 3.3 or 5.0	100	TLS810A1LD, TLS810B1EJ, TLE42764D, TLE4296-2G
TriCore™	1.5 to 3.3	>400	TLF80511TF/ EJ / TC, TLE42764D, TLS850FxTA

For more details on the product, click on the part number or contact our product support.

Integrated class D audio amplifier ICs

Cooler, smaller and lighter class D audio amplifiers for great sounding products

Infineon's MERUS™ audio solutions enable audio designers to improve the performance of their products, while increasing efficiency and reducing solution size. Advances in semiconductor processes in combination with new innovative architectures are behind a portfolio of class D technologies that allow professional, commercial/home and portable audio applications to benefit from unparalleled performance, power density and reliability. The broad portfolio covers power ranges from 20W to 2kW per channel from the smallest single-chip devices and multi-chip module (MCMs) to highly scalable discrete audio amplifier solutions consisting of powerful MOSFET/CoolGaN™ enhancement mode (e-mode) HEMT and driver ICs combinations.

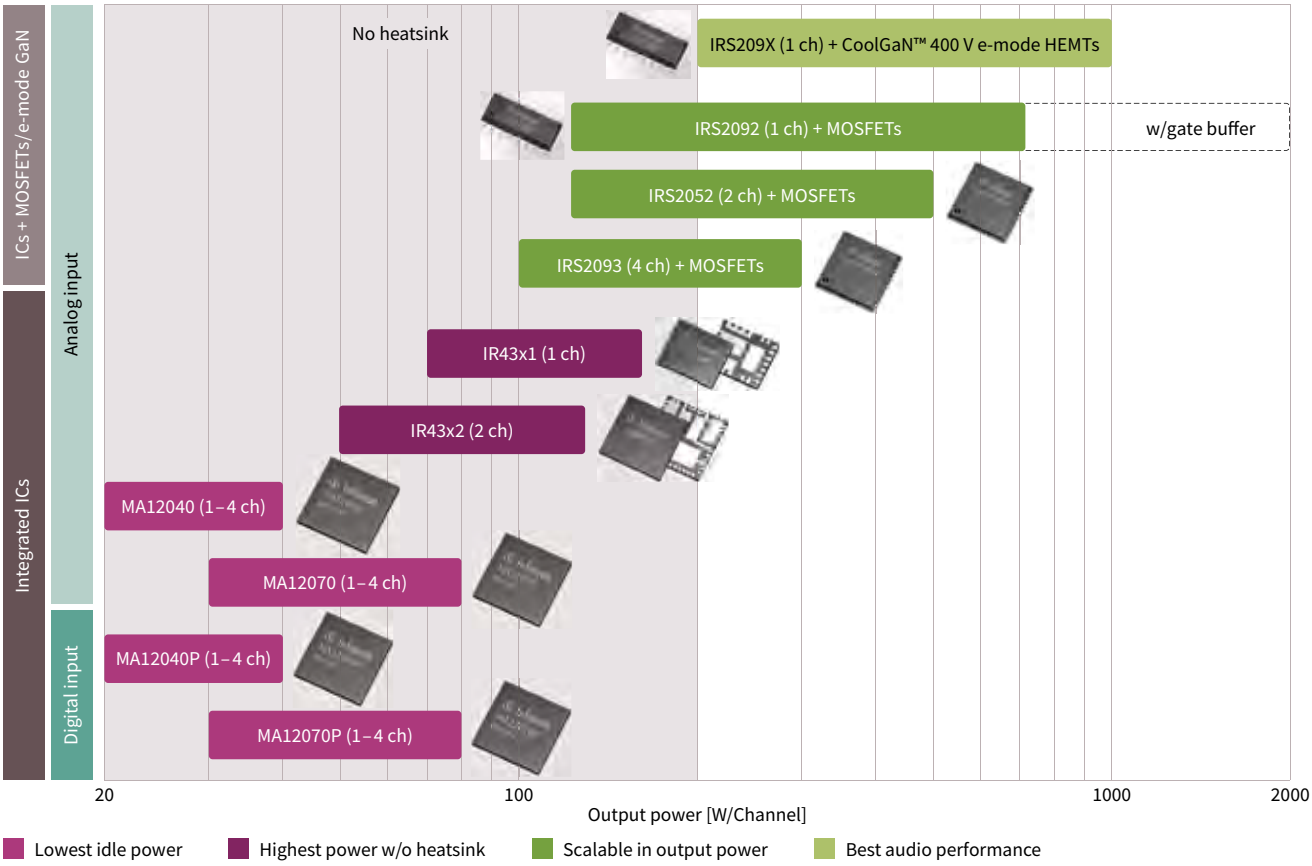

By combining our core principles, competencies, and leadership in groundbreaking power semiconductors with revolutionary audio amplifier technologies, such as MERUS™, we provide solutions that are smaller, lighter, more robust and flexible, running with less heat dissipation. In addition to outstanding quality and reliability, Infineon's amplifier solutions are designed to maximize power efficiency and dynamic range while providing best-in-class performance in product form factors that make them an optimal fit for any high-end application. These include portable/battery powered applications, voice controlled active speakers, television sets, stereo HiFi, soundbars, monitors, power-over-ethernet (PoE) and multichannel systems.

Design with Infineon's solutions to benefit from:

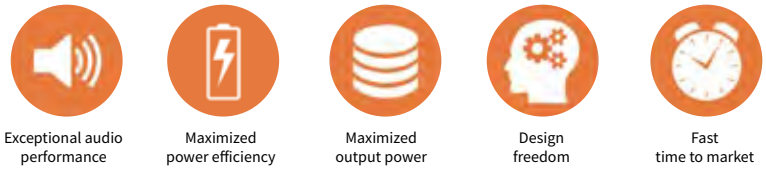

Integrated MERUS™ multilevel amplifier ICs for class D audio solutions

High power efficiency and density in small packages

With its revolutionary MERUS™ integrated multilevel class D audio amplifier ICs, Infineon is leading in efficiency and power density. Compared to traditional class D amplifier ICs, which produce only two voltage output levels, multilevel amplifier ICs use additional on-chip MOSFETs and capacitors to produce outputs with a higher signal granularity i.e. higher switching frequencies and/or multiple output signal levels - typically up to five voltage levels

Filterless topology with "flying capacitor" of an integrated class D IC

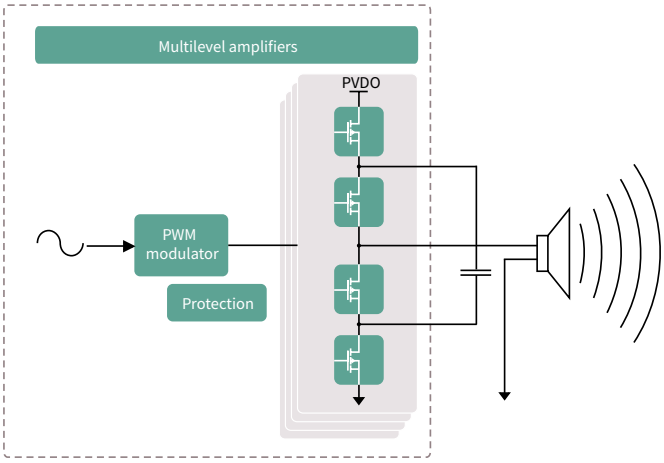

Features and benefits

Key features	Key benefits
› Multilevel switching technology	› Highest efficiency and power density
› Scalable signal "granularity"	› Potential LC filter removal
› Proprietary circuits architecture	› Low THD+N
	› Cooler operation
	› Low power loss
	› Virtually no switching loss measurable in idle mode

Efficiency where it matters for audio reproduction

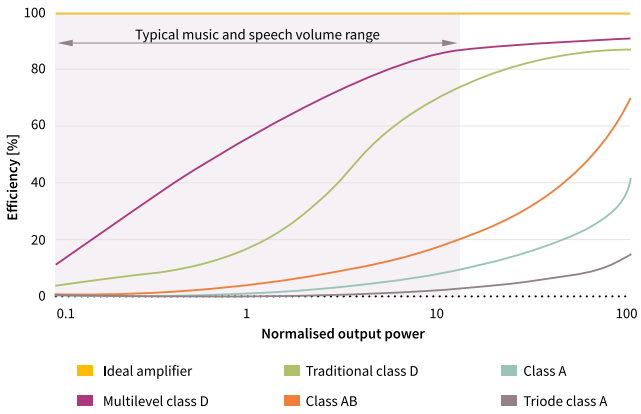

For MERUS™ integrated multilevel audio amplifier ICs, amplifier efficiency at average output power is key. As the graph on the left shows, MERUS™ multilevel amplifier is much more effective than the traditional class D amplifier, which translates into less power consumption in AC input and in battery powered audio applications.

MERUS™ integrated audio amplifier multi-chip modules (MCM)

Integrated components for scalable output power and superb audio performance

Multi-chip modules integrate PWM controller and power MOSFETs in a single package to offer a highly efficient, compact solution that reduces component count, shrinks PCB size up to 70 percent, and simplifies class D amplifier design.

Multi-chip audio amplifier module

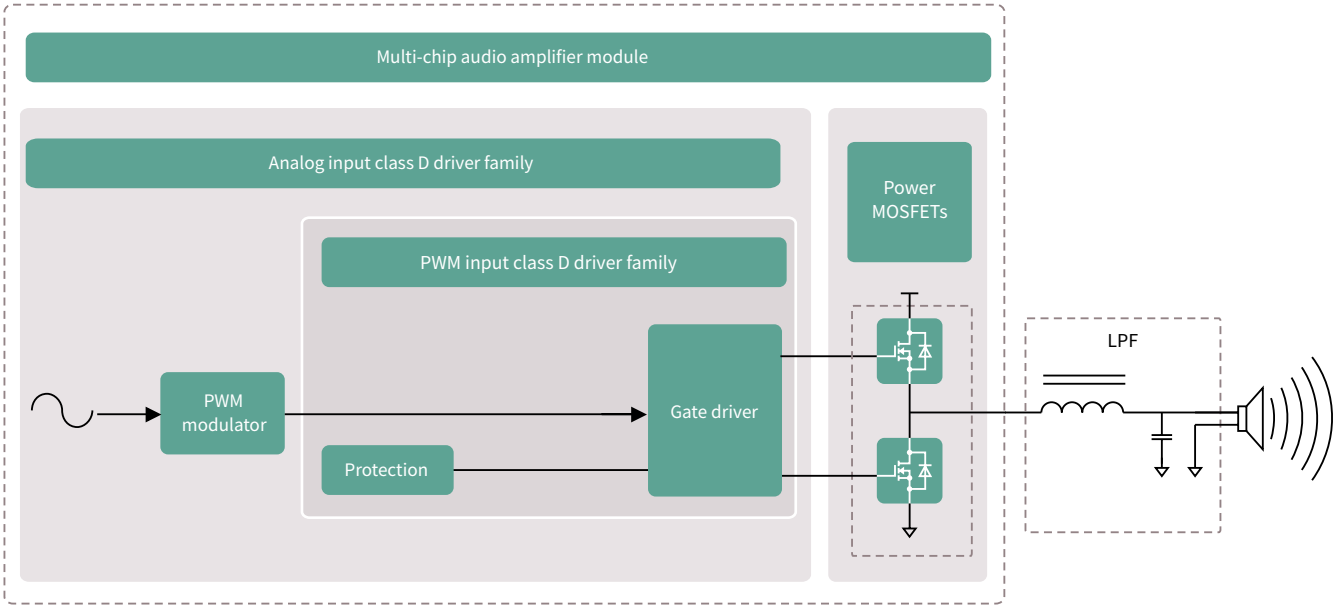

Features and benefits

Key features
› Single package with integrated PWM controller and audio-performance-optimized power MOSFET
› Overcurrent protection
› Thermal shutdown
› Floating differential input
› Clip detection
› Best-in-class power efficiency and audio performance
› Lower component count, leading to design simplification
› Compatible with single supply or split rail configuration
› Click noise reduction

Key benefits
› Extended battery playback time
› Unrivalled audio performance
› Smaller solution size (BOM reduction, system level cost savings)
› Eliminated need for heatsink
› High noise immunity
› Reliable operation
› Thermal efficiency

Discrete MERUS™ audio amplifier driver ICs with MOSFET and gallium nitride CoolGaN™ 400 V e-mode HEMTs

Scalable output power with a unified design platform

Infineon's discrete audio solutions are scalable to various output power levels, simply by replacing the external MOSFETs or CoolGaN™ e-mode HEMTs of the driver-transistor combinations. Key parameters for the transistors used in discrete class D audio applications include on-state resistance ($R_{DS(on)}$), gate charge (Q_G), and reverse recovery charge (Q_{rr}). Our products are specifically suitable for class D audio applications and optimized for these parameters to achieve maximized efficiency, THD and EMI amplifier performance. The CoolGaN™ 400 V e-mode HEMTs portfolio is specifically built for class D audio requirements, with high performing SMD packages to fully utilize the benefits of gallium nitride.

Audio solution overview

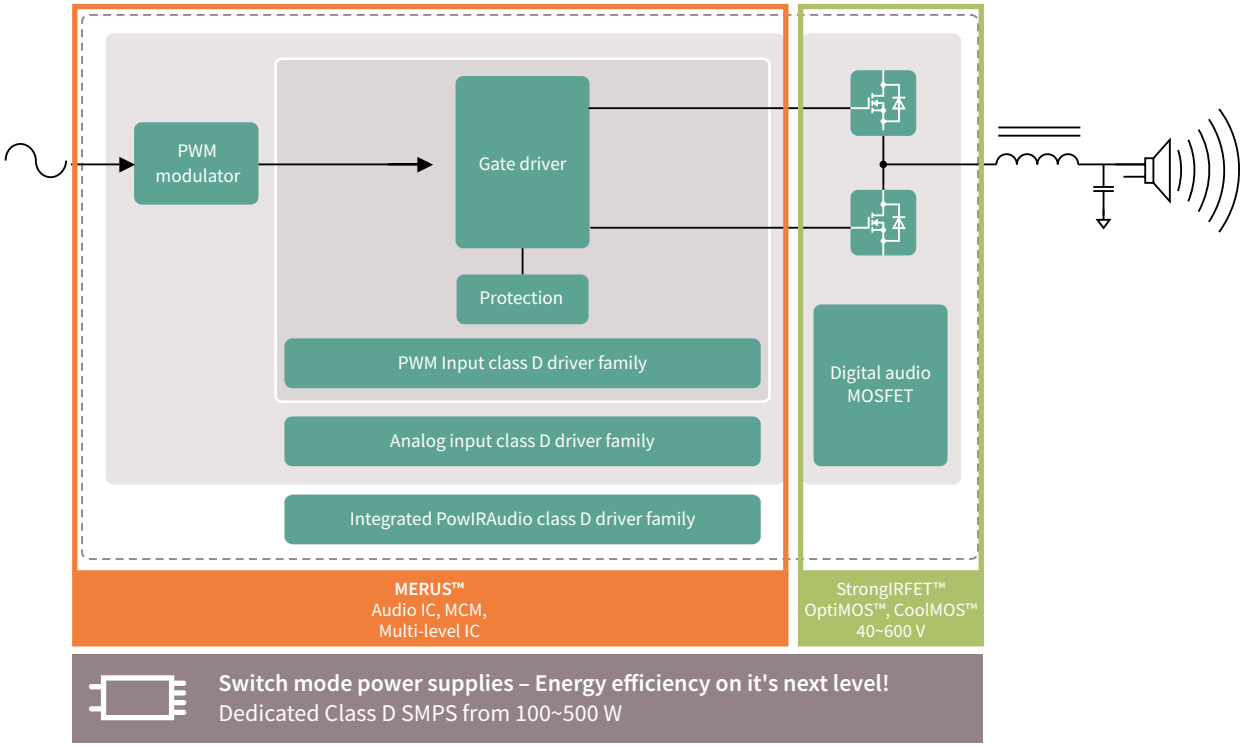

Features and benefits

Key benefits
› Unified design platform
› Scalable output power up to over 2 kW per channel
› Simple yet effective - exchange of external MOSFET triggers alteration in output power level
› Best-in-class power efficiency

Key advantages
› Superior audio performance
› Increased reliability
› Unique audio experience

Integrated class D audio amplifier IC portfolio

MERUS™ integrated multilevel audio amplifier IC product portfolio

		MA12040	MA12040P	MA12070	MA12070P
Specifications	Number of audio channels	2xBTL	2xBTL	2xBTL	2xBTL
	Max. peak power @ 4 ohm 10% THD	2x40 W	2x40 W	2x80 W	2x80 W
	Supply voltage	4-18 V	4-18 V	4-26 V	4-26 V
	3-level and 5-level modulation	✓	✓	✓	✓
	Max. PWM frequency				726 kHz
	Audio input	Analog	Digital	Analog	Digital
	HiRes audio compliant		✓		✓
	Volume and dynamic range control		✓		✓
	Idle power dissipation Max. output and all channels switching	<100 mW	<110 mW	<160 mW	<160 mW
	Audio performance (PMP2)	>107dB DNR 55 µV output noise 0.003% THD+N	>98dB DNR 135 µV output noise 0.006% THD+N	>110dB SNR 45 µV output integrated 0.004% THD+N	101dB SNR 140 µV output noise 0.007% THD+N
Features	Comprehensive protection scheme *	✓	✓	✓	✓
	Configurable for SE or PBTL operation	✓	✓	✓	✓
	I2C communication	✓	✓	✓	✓
	Filterless implementation	✓	✓	✓	✓
	Package type	64-pin QFN package with exposed thermal pad	64-pin QFN package with exposed thermal pad	64-pin QFN package with exposed thermal pad	64-pin QFN package with exposed thermal pad
	Evaluation boards	EVAL_AUDIO_MA12040	EVAL_AUDIO_MA12040P	EVAL_AUDIO_MA12070	EVAL_AUDIO_MA12070P

*All ICs carry a full protection scheme comprising undervoltage lockout, overtemperature warning/error, short circuit/overload protection, power stage pin-to-pin short circuit, error reporting through serial interface (I^2C), and DC protection

MERUS™ integrated audio amplifier multi-chip modules (MCMs)

		IR4301M	IR4321M	IR4311M	IR4302M	IR4322M	IR4312M	MA5332MS*
Specifications	Number of audio channels	1	1	1	2	2	2	2
	Max. power per channel	160 W	90 W	45 W	130 W	100 W	40 W	200 W
	Supply voltage	~ ± 31 V or 62 V	~ ± 25 V or 50 V	~ ± 15 V or 30 V	~ ± 31 V or 62 V	~ ± 25 V or 50 V	~ ± 16 V or 32 V	~ ± 23 V or 40 V
	Max. PWM frequency	500 kHz	500 kHz	500 kHz	500 kHz	500 kHz	500 kHz	500 kHz
Features	Differential audio input	✓	✓	✓	✓	✓	✓	✓
	Over-current protection	✓	✓	✓	✓	✓	✓	✓
	Integrated power MOSFET	✓	✓	✓	✓	✓	✓	✓
	Voltage	80 V	60 V	40 V	80 V	60 V	40 V	100 V
	PWM controller	✓	✓	✓	✓	✓	✓	✓
	Thermal shutdown	✓	✓	✓	✓	✓	✓	✓
	Click noise reduction	✓	✓	✓	✓	✓	✓	✓
	Clip detection				✓	✓	✓	✓
	Package type	5 x 6 mm QFN	5 x 6 mm QFN	5 x 6 mm QFN	7 x 7 mm QFN	7 x 7 mm QFN	7 x 7 mm QFN	7 x 7 mm QFN
	Evaluation boards	IRAUDAMP12 IRAUDAMP19	IRAUDAMP21	IRAUDAMP15	IRAUDAMP16 IRAUDAMP17	IRAUDAMP22	IRAUDAMP18	EVAL_AUDAMP25

* Coming soon

For more details on the product, click on the part number or contact our product support.

MERUS™ discrete audio amplifier driver IC product portfolio

	Number of audio channels	IRS20965S	IRS20957SPBF	IRS2092SPBF	IRS2052M	IRS2093MPBF	IRS2452AM
Specifications	Max power per channel	500 W	500 W	500 W	300 W	300 W	500 W
	Supply voltage	± 100 V	± 100 V	± 100 V	± 100 V	± 100 V	± 200 V
	Gate sink/source current	2.0/2.0 A	1.2/1.0 A	1.2/1.0 A	0.6/0.5 A	0.6/0.5 A	0.6/0.5 A
Features	Overcurrent protection	✓	✓	✓	✓	✓	✓
	Overcurrent flag	✓					
	PWM input	✓	✓				
	Floating input	✓	✓	✓	✓	✓	✓
	Deadtime		✓	✓	✓	✓	✓
	Protection control logic	✓	✓	✓	✓	✓	✓
	PWM controller			✓	✓	✓	✓
	Clip detection				✓		
	Click noise reduction			✓	✓	✓	✓
	Temperature sensor input				✓		✓
	Thermal shutdown				✓		
	Clock input				✓		✓
	Package type	16-pin SOIC narrow	16-pin SOIC narrow	16-pin SOIC narrow	MLPQ48	MLPQ48	MLPQ32
	Evaluation boards		IRAUDAMP4A IRAUDAMP6	IRAUDAMP5 IRAUDAMP7S IRAUDAMP7D IRAUDAMP9	IRAUDAMP10	IRAUDAMP8	EVAL_IRAUDAMP23

Recommended MOSFET (through-hole) product portfolio

Output power	Recommended discrete audio driver IC	Speaker resistance		
		2 Ω	4 Ω	8 Ω
150 W	IRS2093MPBF	IRFB4019	IRFB4019	IRFI4020H-117P
200 W	**IRS2052M**	IRFB5615	IRFB4019	IRFI4020H-117P
300 W	IRS2092SPBF	IRFB4228PBF	IRFB4227	IRFB4229
500 W	IRS20957SPBF	IRFB4228PBF	IRFB4227	IRFB4229
750 W		IRFB4227	IRFB4229	
1000 W		IRFP4668	IRFB4229 x 2	

IRS2093MPBF works up to 150 W and IRS2052M works up to 300 W.
IRS2092SPBF and IRS20957SPBF work with all power levels listed above.

Recommended MOSFET (DirectFET™) product portfolio

Output power	Recommended discrete audio driver IC	Speaker resistance		
		2 Ω	4 Ω	8 Ω
150 W	IRS2093MPBF	IRF6645	IRF6665	IRF6775M
200 W	IRS2052M	IRF6646	IRF6775M	IRF6775M
300 W	IRS2092SPBF	IRF6644	IRF6775M	IRF6785
500 W	IRS20957SPBF	IRF6643	IRF6641	

Recommended CoolGaN™ 400 V e-mode HEMT product portfolio

	CoolGaN™ 400 V e-mode HEMT	Recommended discrete audio amplifier driver IC
Package	HSOF-8-3 (TO-Leadless)	IRS20957SPBF
$P_{max.}$	Up to 200 W	
$R_{DS(on)\ max.}$	70 mΩ	
OPN	IGT40R070D1 E8220	

For more details on the product, click on the part number or contact our product support.

Recommended audio evaluation boards

Enabling fast time to market and device performance evaluation

MERUS™ integrated multilevel audio amplifier IC evaluation boards

EVAL_AUDIO_MA12070
Number of audio channels:
2 channels BTL or
1 channel PBTL or
2 channels SE + 1 BTL or
4 channels SE
Output power per channel (2xBTL, Peak, 10% THD, 4 Ω): 2x 80 W
Featured module IC: MA12070
Input: Analog
OPN: EVALAUDIOMA12070TOBO1

EVAL_AUDIO_MA12070P
Number of audio channels:
2 channels BTL or
1 channel PBTL or
2 channels SE + 1 BTL or
4 channels SE
Output power per channel (2xBTL, Peak, 10% THD, 4 Ω): 2x 80 W
Featured module IC: MA12070P
Input: Digital
OPN: EVALAUDIOMA12070PTOBO1

MERUS™ integrated audio amplifier multi-chip module (MCM) evaluation boards

IRAUDAMP12
Number of audio channels: 2
Output power per channel [RMS]: 130 W
Featured class D IC: IR4301M
Input: Analog
OPN: IRAUDAMP12

IRAUDAMP17
Number of audio channels: 2
Output power per channel [RMS]: 100 W
Featured class D IC: IR4302M
Input: Analog
OPN: IRAUDAMP17

IRAUDAMP19
Number of audio channels: 2
Output power per channel [RMS]: 100 W
Featured class D IC: IR4301M
Input: Analog
OPN: IRAUDAMP19

IRAUDAMP21
Number of audio channels: 2
Output power per channel [RMS]: 135 W
Featured class D IC: IR4321M
Input: Analog
OPN: IRAUDAMP21

IRAUDAMP22
Number of audio channels: 2
Output power per channel [RMS]: 100 W
Featured class D IC: IR4322M
Input: Analog
OPN: IRAUDAMP22

For more details on the product, click on the part number or contact our product support.

Discrete MERUS™ audio amplifier driver IC and MOSFET evaluation boards

IRAUDAMP4A
Number of audio channels: 2
Output power per channel [RMS]: 120 W
Featured driver IC: IRS20957S
Featured MOSFET: IRF6645TRPbF
OPN: IRAUDAMP4A

IRAUDAMP5
Number of audio channels: 2
Output power per channel [RMS]: 120 W
Featured driver IC: IRS2092S
Featured MOSFET: IRF6645TRPbF
OPN: IRAUDAMP5

IRAUDAMP6
Number of audio channels: 2
Output power per channel [RMS]: 250 W
Featured driver IC: IRS20957S
Featured MOSFET: IRF6785MTRPbF
OPN: IRAUDAMP6

IRAUDAMP7S
Number of audio channels: 2
Output power per channel [RMS]: 500 W
Featured driver IC: IR-S2452AM
Featured MOSFET: IRFI4019H-117P
OPN: IRAUDAMP7S

IRAUDAMP9
Number of audio channels: 1
Output power per channel [RMS]: 1700 W
Featured driver IC: IRS2092S
Featured MOSFET: IRFB4227PbF
OPN: IRAUDAMP9

IRAUDAMP10
Number of audio channels: 2
Output power per channel [RMS]: 370 W
Featured driver IC: IRS2052M
Featured MOSFET: IRF6775MTRPbF
OPN: IRAUDAMP10

IRAUDAMP23
Number of audio channels: 2
Output power per channel [RMS]: 500 W
Featured driver IC: IRS2452AM
Featured MOSFET: IPP60R180C7
OPN: IRAUDAMP23

For more details on the product, click on the part number or contact our product support.

Discrete audio amplifier driver IC and CoolGaN™ 400 V evaluation board

EVAL_AUDAMP24
Number of audio channels: 2
Output power per channel [RMS]: 300 W @ 1%
Featured driver IC: IRS20957S
Featured HEMT
IGOT40R070D1
IGT40R070D1
OPN: EVAL_AUDAMP24

Power supply units for audio evaluation boards

IRAUDPS1
Input voltage: 12 V_{DC}
Output voltage: ± 35 V
Output power per channel [RMS]: 100 W
Featured driver IC:
IR2085
Description:
250-1000 W scalable audio power supply
OPN: IRAUDPS1

IRAUDPS3
Input voltage: 110/220 V_{AC}
Output voltage: ± 30 V
Output power per channel [RMS]: 200 W
Featured driver IC:
IRS27952S
Description:
Power supply for class D audio amplifier
OPN: IRAUDPS3

For more details on the product, click on the part number or contact our product support.

AC-DC LED driver IC

Digital and mixed signal, single- and dual-stage high voltage control ICs for LED drivers

XDP™ digital power – digital single- and dual-stage flyback combo controllers
The XDP™ portfolio of high performance digital power control ICs addresses today's challenges such as smart or connected lighting, meeting demanding LED driver requirements with a unique set of features.

Mixed-signal control ICs for solid-state lighting luminaires
Infineon's mixed-signal control ICs for LED drivers deliver excellent power quality and high efficiency for LED lighting applications supporting dimming levels down to 1%. The integration of advanced functions saves external components and minimizes system cost. The wide variety of features and functions gives the option to choose the best fitting part for the application.

ICL8800/ICL8810/ICL8820

Single-stage flyback LED controllers for constant voltage output

ICL88xx family of single-stage flyback controllers for constant voltage output is tailored for LED lighting applications to meet the required performance cost-effectively. All three ICs offer benchmarking performance for power factor correction and total harmonic distortion at full-load as well as at low-load conditions. With their comprehensive set of protection features (compare table below) and bottom-up design, they are easy to design-in and require a minimum number of external components. The controllers are optimized as secondary-side regulated (SSR) constant voltage (CV) output flyback controllers and are also well suited for primary-side regulation (PSR).

Additionally, the controllers' low standby power due to the integrated BM (in ICL8810, ICL8820) is ideally suited for smart lighting systems' requirements. The jitter function (in ICL8820) eases the design of emergency lighting LED drivers without additional circuitry. It fulfills EMI requirements in DC operation and improves the EMI performance.

Typical application schematic

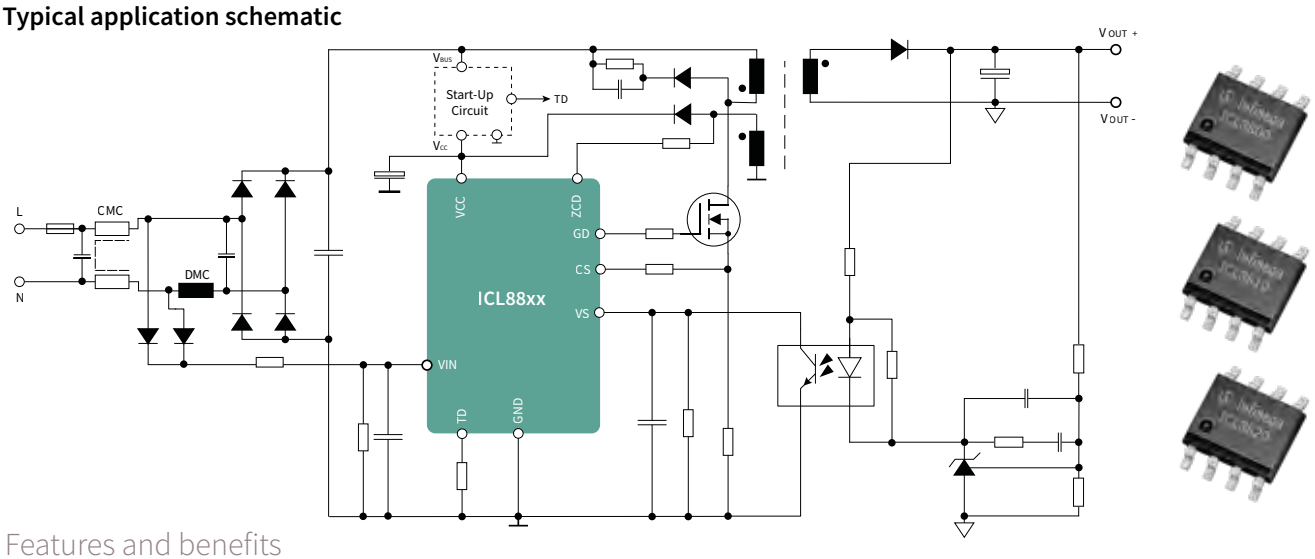

Features and benefits

Key benefits
› Optimized for SSR CV output flyback operation, additionally suited for PSR
› PF > 0.9 and THD < 10% across a wide load range (AC input up to 277 V_{rms})
› CCM and QRM with smart valley hopping
› ICL8810 contains also burst mode (BM) to ensure low standby power (< 100mW)
› ICL8820 contains also built-in jitter function

Key advantages
› Low BOM for wide range of applications with PFC functionality where dual stage topologies are required
› Enables platform design and window drivers
› Optimum efficiency and low EMI at low BOM without compromising light quality
› ICL8810 **enables in addition:** smart lighting in connection with microcontrollers (stand-by power < 500mW, i.e. more power budget for additional components)
› ICL8820 **enables in addition:** Fulfillment complying with EMI regulations in DC operation at low cost and effort

Order information for ICL88xx

Board name	Description	Ordering code
ICL8800	Single-stage flyback controller for constant voltage output	ICL8800XUMA1
REF_ICL8800_LED_43W*	Demoboard with ICL8800	REFICL8800LED43W
ICL8810	Single-stage flyback controller for constant voltage output with low standby power	ICL8810XUMA1
REF_ICL8810_LED_43W_BM*	Demoboard with ICL8810 with burst mode	REFICL8810LED43WBM
REF_ICL8810_LED_42W_PSR	Demoboard with ICL8810 for primary side regulation	REFICL8810LED42WPSR
ICL8820	Single-stage flyback controller for constant voltage output with low standby power and jitter function	ICL8820XUMA1
REF_ICL8820_LED_43W_JT*	Demoboard with ICL8820 with jitter function	REFICL8820LED43WJT

Plug & LEDs play | LED | Lighting

*See Plug & LEDs play, ideally to be combined with secondary-side boards

For more details on the product, click on the part number or contact our product support.

ICL5102

High performance PFC + resonant controller for LCC and LLC

With ICL5102 Infineon offers a highly integrated combo controller IC with a universal input of 70V to 325V, which allows manufactures to realize global designs, keeping cost for product variety and stock low. Highest efficiency of up to 94 percent by resonant topology, a THD factor less than 3.5 percent and a high power factor of more than 0.95 allow for more lumen output and less thermal load, enabling cost effective designs and keeping cost for LEDs and heat sink low. Thanks to the high integration, there is no need for additional expensive components in PFC and LLC stage, reducing the overall BOM cost. In addition integrated protection features complement the ICL5102 features.

Typical application schematic

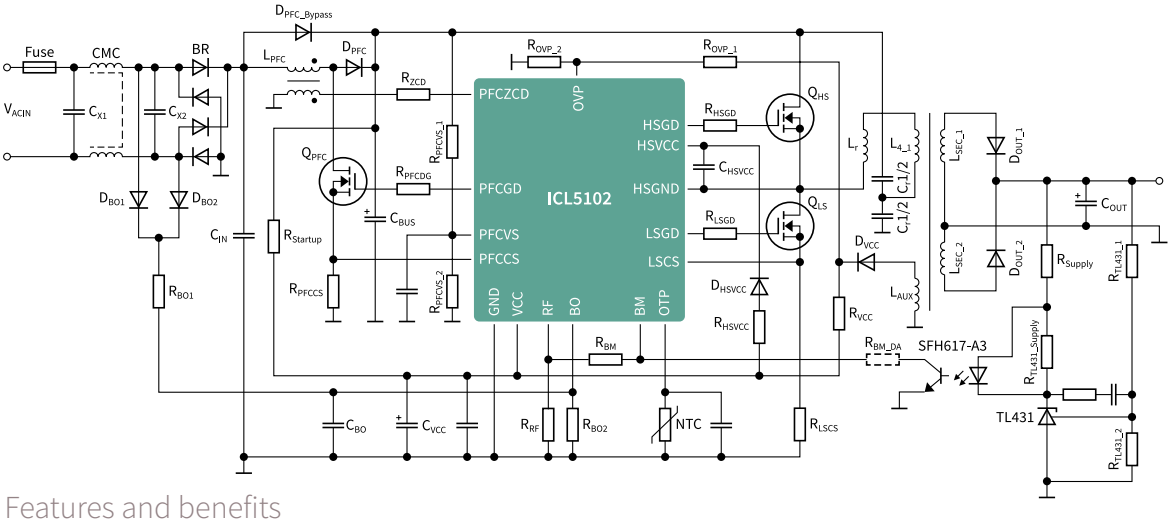

Features and benefits

Key features and benefits
› **Small form factor LED driver and low BOM** The high level of integration assures a low count of external components, enabling small form factor designs and making them ideal for compact and slimline power supplies for lighting, such as LED driver for indoor and outdoor applications
› **High performance, digital PFC and advanced HB driver** The high performance digital PFC stage achieves power factor of 99 percent, through operation in CrCM and DCM mode, in a frequency range of 22 to 500 kHz. This supports stable operation even at low-load conditions down to 0.1 percent of the nominal power without audible noise
› **Fast time-to-light and low standby** With start-up current of less than 100 µA the controller provides very fast time-to-light within less than 300 ms, while standby the controller changes into active burst mode which reduces power consumption to less than 300 mW
› **Safety first** The controller has a comprehensive set of protection features built in to increase the system safety. It monitors in the run mode the complete system regarding bus over- and undervoltage, open loop, overcurrent of PFC and/or inverter, output overvoltage, overtemperature and capacitive load operation

Order information for ICL5102

Type	Description	Ordering code
ICL5102	PFC and resonant controller for LCC and LLC	ICL5102XUMA2
REF-ICL5102-U130W-CC	PFC/LLC-CC constant current evaluation board 130 W LED driver	REFICL5102U130WCCTOBO1
REF-ICL5102-U52W-CC	Low-cost PFC/LCC reference design 52 W LED driver, non-dimmable	REFICL5102U52WCCTOBO1
REF_ICL5102_U100W_LCC	Low cost PFC/LCC reference design 100 W, dimmable	REFICL5102U100WLCC
REF_LLC_BUCK_4CH_320W*	Scalable 320 W multichannel high-power LED driver (using ICL5102 board and ILD8150E board))	REFLLCBUCK4CH320WTOBO1

Plug & LEDs play | Smart city lighting | Lighting

*See Plug & LEDs play, ideally to be combined with secondary-side boards

For more details on the product, click on the part number or contact our product support.

ICL5102HV

High performance PFC + resonant controller for LCC and LLC, supporting 980 V high side

ICL5102HV control IC for LED drivers offers a unique one-package solution for lighting applications up to 350 W, supporting LLC/LCC topology. It is particularly designed to deliver best performance of total harmonic distortions (THD) and power factor (PF). Compared to level-shifter technology, the integrated coreless transformer not only further reduces the loss at high operation frequency, but also enhances the capability of handling huge negative voltage (-600 V on HSGND). Reduce the number of external components to optimize form factor and reduce bill of material (BOM) with the integrated two-stage combination controller (PFC + LLC/LCC) for lighting applications. Simplify your design and shorten time-to-market.

Typical application schematic

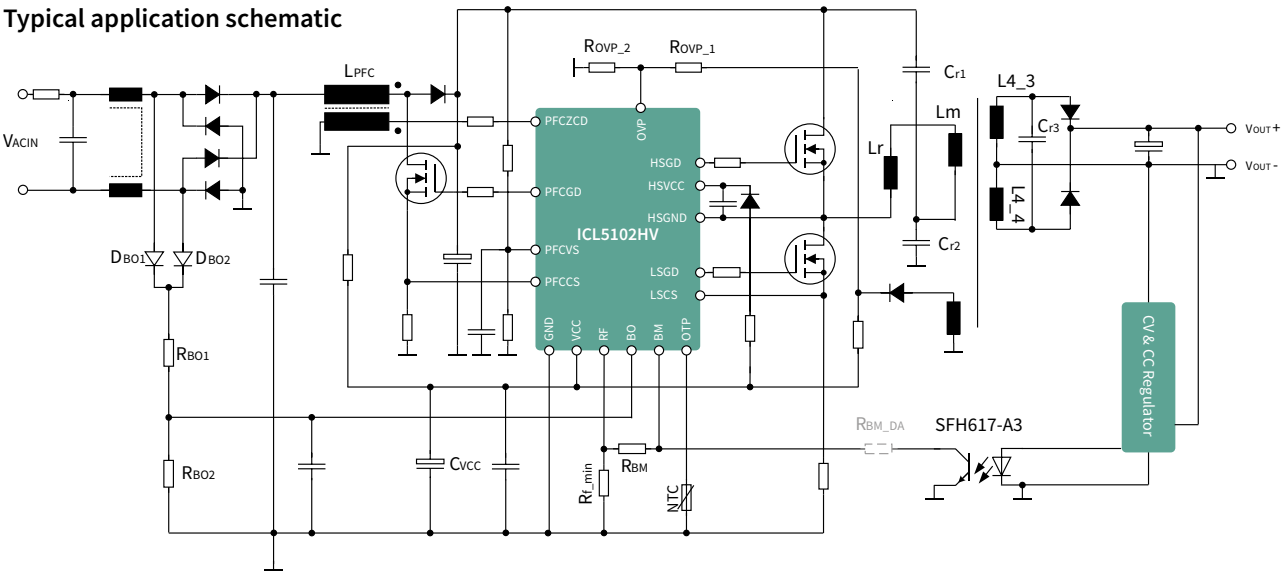

Features and benefits

Key features and benefits
› **Small form factor LED driver and low BOM** The high level of integration assures a low count of external components, enabling small form factor designs and making them ideal for compact and slimline power supplies for lighting, such as LED driver for indoor and outdoor applications
› **High performance, digital PFC and advanced HB driver** The high performance digital PFC stage achieves power factor of 99 percent, through operation in CrCM and DCM mode, in a frequency range of 22 to 500 kHz. This supports stable operation even at low-load conditions down to 0.1 percent of the nominal power without audible noise
› **Fast time-to-light and low standby** With start-up current of less than 100 µA the controller provides very fast time-to-light within less than 300 ms, while standby the controller changes into active burst mode which reduces power consumption to less than 300 mW
› **Safety first** The controller has a comprehensive set of protection features built in to increase the system safety. It monitors in the run mode the complete system regarding bus over- and undervoltage, open loop, overcurrent of PFC and/or inverter, output overvoltage, overtemperature and capacitive load operation

Order information for ICL5102HV

Type	Description	Ordering code
ICL5102HV	PFC and resonant controller for LCC and LLC	ICL5102HVXUMA1
REF-ICL5102HV-U150W	PFC/LCC evaluation board 150 W, CC LED driver	REFICL5102HVU150WTOBO1

Lighting

For more details on the product, click on the part number or contact our product support.

XDP™ LED

The IC family XDP™ is the first all-in-one package solutions combining a digital controller with key power peripherals. Such integration provides exceptional flexibility and performance. The XDP™ family addresses essential features for advanced LED driver.

XDPL8105 – digital flyback controller IC for LED driver

The XDPL8105 is a digital, single-stage flyback controller with high power factor for constant current LED driver. The device offers versatile functions for different indoor and outdoor lighting applications. The IC is available in a DSO-8 package and it provides a wide feature set, requiring a minimum of external components. The advanced control algorithms in the digital core of the XDPL8105 provide multimode operation for high efficiency. Configurable parameters allow last minute changes, shorten the product development and reduce hardware variants. The extensive set of configurable standard and sophisticated protection mechanisms ensure safe, reliable and robust LED driver device for diverse use cases.

Typical application schematic

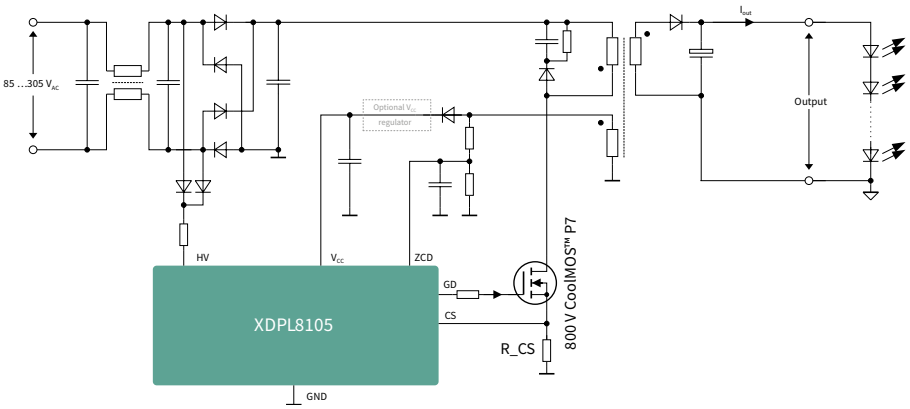

Features and benefits

Key features and benefits
› Constant current with primary side regulation
› Supports AC and DC input
› Nominal input voltage range 90-305 V_{AC} or 120-350 V_{DC}
› Integrated 600 V start-up cell
› Power factor > 0.9 and THD < 15 percent over wide load range
› Highly accurate primary side control output current typ. ± 3 percent
› Reference board efficiency > 90 percent
› Internal temperature guard with adaptive thermal management
Multimode operation › QRM (quasi-resonant mode) › DCM (discontinuous conduction mode) › ABM (active burst mode)
Digital parameters
Relevant error conditions are monitored and protected › Undervoltage › Overvoltage › Open load › Output shorted

Order information for XDPL8105

Type	Description	Ordering code
XDPL8105	Digital flyback constant current controller IC	XDPL8105XUMA1
REF-XDPL8105-CDM10V	40 W reference design with CDM10V isolated 0 V-10 V dimming interface	REFXDPL8105CDM10VTOBO1

Lighting

For more details on the product, click on the part number or contact our product support.

XDPL8210 – digital flyback constant current controller IC for LED driver with 1 percent dimming

The XDPL8210 is a digital, single-stage, quasi-resonant flyback controller with high power factor and high precision primary side controlled constant current output. The IC is available in a DSO-8 package and it provides a wide feature set, which requires only a small number of external components. Sophisticated algorithms provide flicker-free dimming below one percent. The driver fully supports IEC61000-3-2 class C designs. The limited power mode improves functional safety, while configurable parameters allow last minute changes, shorten the product development and reduce hardware variants. The extensive set of configurable standard and sophisticated protection mechanisms ensure safe, reliable and robust LED driver for a large set of use cases.

Typical application schematic

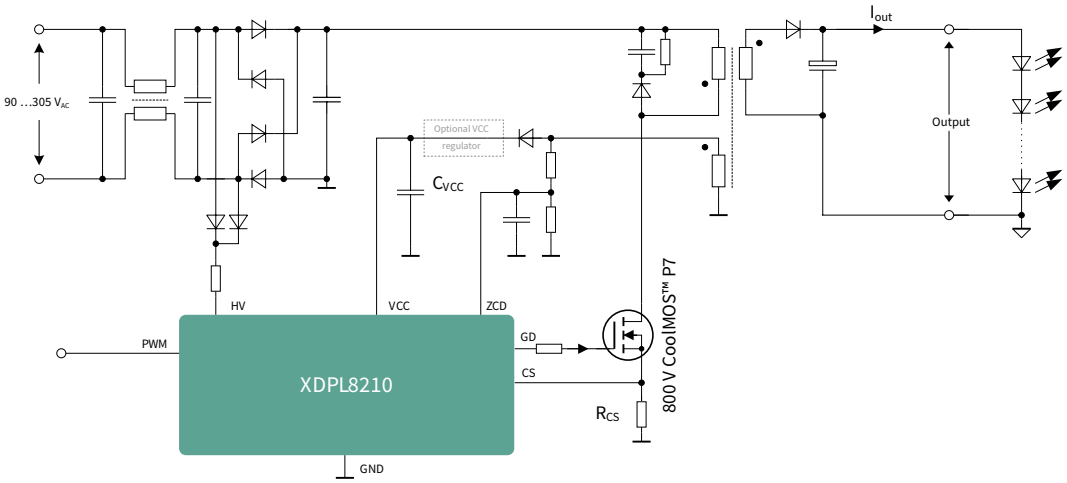

Features and benefits

Key features and benefits
› Constant current with primary side regulation
› Supports AC and DC input
› Nominal input voltage range 90-305 V_{AC} or 90-430 V_{DC}
› Reference board efficiency > 90 percent
› Power factor > 0.9 and THD < 15 percent over wide load range
› Standby power < 100 mW
› Internal temperature guard with adaptive thermal management
Multimode operation › QRM (quasi-resonant mode) › DCM (discontinuous conduction mode) › ABM (active burst mode)
Digital parameters
Relevant error conditions are monitored and protected › Undervoltage › Overvoltage › Open load › Output shorted

Order information for XDPL8210

Type	Description	Ordering code
XDPL8210	Digital flyback constant current controller IC	XDPL8210XUMA1
REF-XDPL8210-U35W	35 W reference design with CDM10V isolated 0 V-10 V dimming interface	REFXDPL8210U35WTOBO1

Lighting

For more details on the product, click on the part number or contact our product support.

XDPL8219 – PFC/flyback controller with enhanced total harmonic distortion

The XDPL8219 is a digital high-performance secondary-side regulated flyback controller with constant voltage output. With its high power-factor the controller is the perfect fit for cost-effective, dual-stage LED drivers and enables for instance smart lighting applications. The device operates in quasi-resonant mode (QRM) to maximize the efficiency and minimize the electromagnetic interference (EMI) over a wide load range. It enters active burst mode (ABM) at light load to prevent audible noise from being heard, while achieving no-load standby power as low as <100mW. XDPL8219 is available in a DSO-8 package.

Typical application schematic

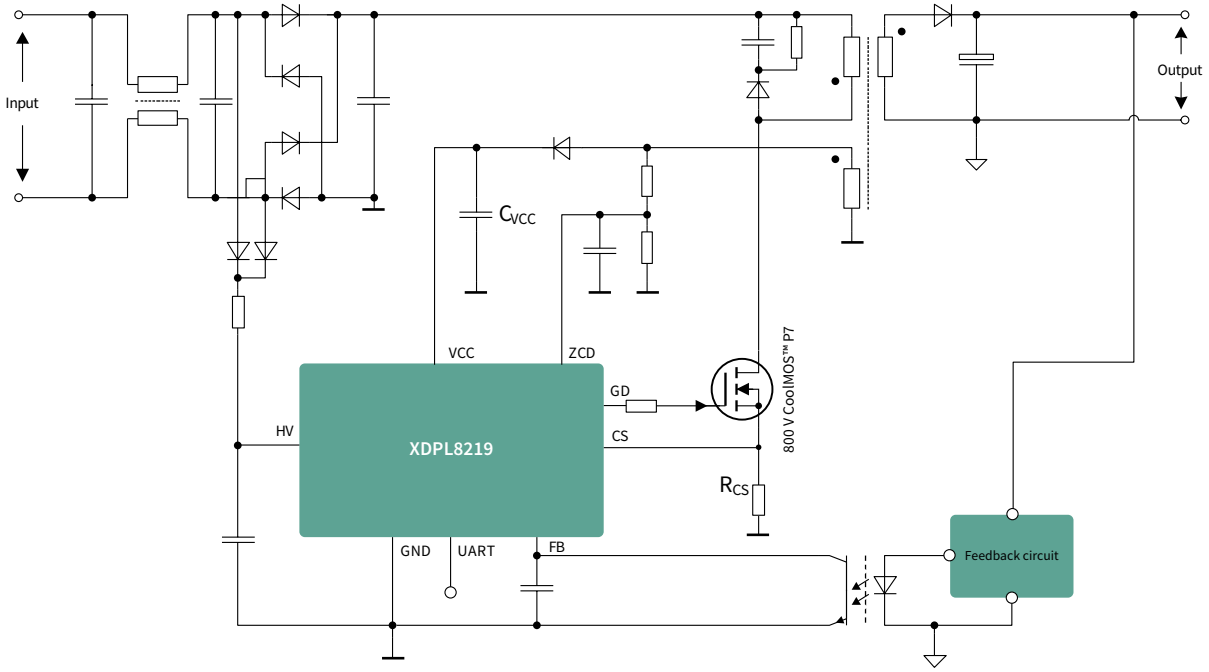

Features and benefits

Key benefits
› Secondary-Side-Regulated (SSR) constant voltage (CV) output
› Flyback controller with power factor correction
› Depending on load condition, either quasi-resonant, discontinuous conduction mode or active burst mode (ABM)
› Integrated 600V start-up cell

Key benefits
› Supporting wide load range and fast and stable reaction to dynamic load changes
› PF > 0.9 and THD < 10% across a wide load range (AC input up to 277 Vrms)
› Optimal efficiency, power factor and THD can be achieved by best-suited mode. In addition, DCM eases compliance with EMI at low-load condition
› Very low stand-by power < 100 mW can be achieved
› Integrated start-up cell enables very high efficiency

Order information for XDPL8218

Type	Description	Ordering code
XDPL8219	Digital flyback CV-output controller IC	XDPL8219XUMA1
REF-XDPL8219-U40W*	Efficient 40 W reference circuit design for XDPL8219 with high power factor and low THD. It is built for universal input voltage 120–277 V AC or 127–432 V DC	REFXDPL8219U40WTOBO1

Plug & LEDs play | LED | Lighting

*See Plug & LEDs play, ideally to be combined with secondary-side boards

For more details on the product, click on the part number or contact our product support.

XDPL8221 - digital dual stage multi-mode flyback controller for CC, CV, LP with 1 percent dimming and serial interface

The XDPL8221 is a digital, highly integrated, future-proof device combining a quasi-resonant PFC with a quasi-resonant flyback controller with primary side regulation. A serial communication interface supports direct communication with an external microcontroller unit (MCU). The XDPL8221 is especially designed for advanced LED driver in smart lighting or IoT applications, featuring flicker-free dimming down to 1 percent of nominal current. The device enables customizable LED driver and simplifies the generation and maintenance of different variants without increasing the number of stock keeping units. The IC is available in a DSO-16 package.

Typical application schematic

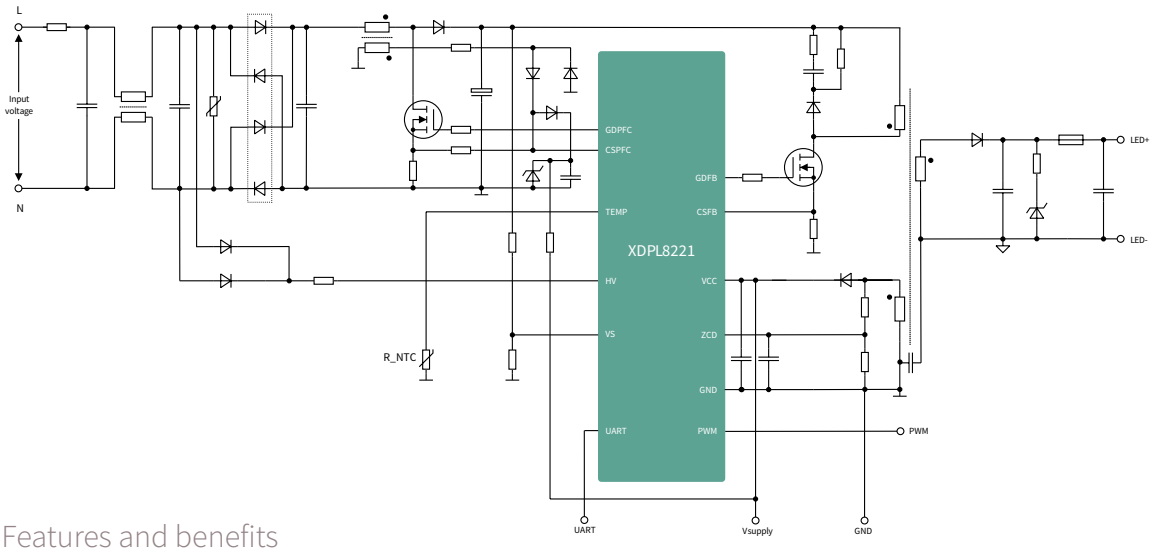

Features and benefits

Key features and benefits
› Nominal input voltage range 100-305 V_{AC} or 90-430 V_{DC}
› Reference board efficiency > 90 percent
› Power factor > 0.9 and THD < 15 percent over wide load range
› UART Interface for control and real-time monitoring
› Constant current, constant voltage, limited power with primary side regulation
› 1 percent dimming
› Dim-to-off with low standby power < 100 mW
› Internal temperature guard with adaptive thermal management
› The UART interface and the command set enable to control the function of the XDPL8221 or inquire status information
Multimode operation › QRM (quasi-resonant mode) › DCM (discontinuous conduction mode) › ABM (active burst mode)
Digital parameters
Relevant error conditions are monitored and protected › Undervoltage › Overvoltage › Open load › Output shorted

Order information for XDPL8221

Type	Description	Ordering code
XDPL8221	Digital dual stage multimode flyback Controller for CC, CV, LP with 1 percent dimming	XDPL8221XUMA1
REF-XDPL8221-U50W	50 W reference board with CDM10V isolated 0 V-10 V dimming interface	REFXDPL8221U50WTOBO1
REF-XDPL8221-U100W	100 W reference board with CDM10V isolated 0 V-10 V dimming interface	REFXDPL8221U100WTOBO1

Lighting

For more details on the product, click on the part number or contact our product support.

DC-DC LED driver ICs

DC-DC switch mode LED driver ICs with efficiencies up to 98%, dimming level down to 0.5%

Infineon offers highly integrated DC-DC LED driver ICs that support currents up to 1.5A, making these drivers the ideal choice for high- and ultra-high-power LEDs. These highly integrated DC to DC driver ICs achieve efficiency levels as high as 98% across a wide range of operation conditions. Integrated smart thermal protection, along with overvoltage and overcurrent protection contribute to a longer LED lifetime.

Go for quality with Infineon's cost-efficient linear LED driver ICs

Infineon's BCR linear driver ICs are the best choice for driving LED strings supplied by a DC voltage source. The BCR regulators are suitable for driving currents from 10mA to 250mA. That is why they are the best solution for low- and mid-power LEDs. For high-power LEDs instead, the linear controller ICs in combination with an external power stage allow for the greatest design flexibility.

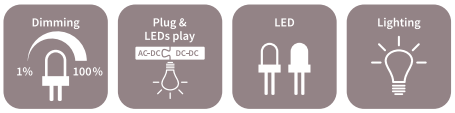

ILD8150/ILD8150E – 80 V DC-DC buck LED driver IC for high-power LEDs and high-performance hybrid dimming

The ILD8150 is 80 V DC-DC converter IC, designed to be used in LED applications to drive high power LEDs. For applications operating close to safe extra low voltage (SELV) limits, it provides a high safety voltage margin. The buck LED driver IC is tailored for LEDs in general lighting applications with average currents up to 1.5 A using a high-side integrated switch. Several performance and protection features provide the right fit for professional LED lighting.

The hysteretic current control provides an extremely fast regulation and stable LED current combined with good EMI performance. The efficiency of the LED driver IC is remarkably high, reaching more than 95 percent efficiency over a wide range. A PWM input signal between 250 Hz and 20 kHz controls dimming of the LEDs current in analog mode from 100 to 12.5 percent and 12.5 to 0.5 percent in PWM mode with flicker-free modulation frequency of 3.4 kHz.

Digital PWM dimming detection with high resolution makes ILD8150/E the perfect LED driver IC for use together with microcontrollers. Precise output current accuracy from device to device under all loads and input voltage conditions makes it perfect for tunable white and flat panel designs where current must be identical string to string.

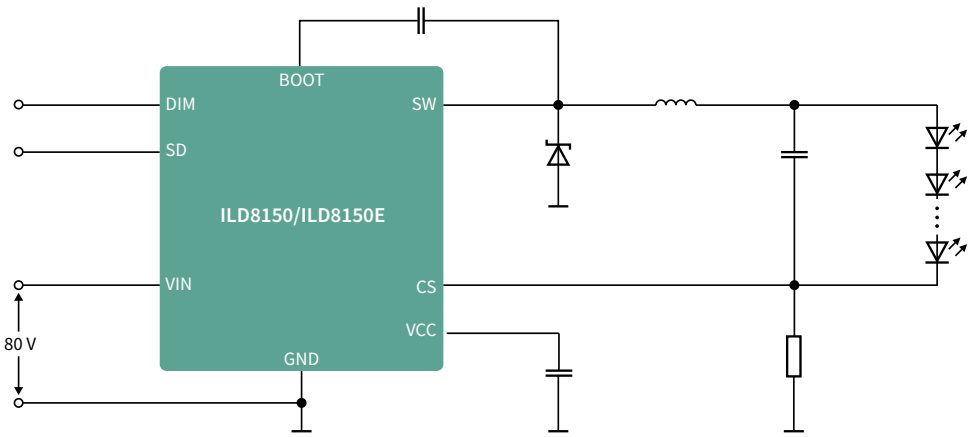

Features and benefits

Key benefits
› Wide input voltage ranging from 8–80 V_{DC}
› Up to 1.5 A average output current, adjustable via shunt resistor
› Efficiency > 95 percent
› Up to 2 MHz switching frequency
› Soft-start
› PWM dimming input, with 250 Hz to 20 kHz PWM dimming frequency

Key advantages
Hybrid dimming for flicker free light down to 0.5 percent › Analog dimming 100 percent – 12.5 percent › PWM dimming 12.5 percent – 0.5 percent with 3.4 kHz flicker-free modulation, dim-to-off
› Typical 3 percent output current accuracy
› Overtemperature protection
› Pull-down transistor to avoid LED glowing in dim-to-off
› DSO-8 package to enable wave soldering
› DSO-8 with exposed pad for higher thermal performance (ILD8150E)

Type	Description	Package	Ordering code
ILD8150	80 V DC-DC buck LED driver IC	DSO-8	ILD8150XUMA1
ILD8150E	80 V DC-DC buck LED driver IC	DSO-8 exposed pad	ILD8150EXUMA1
REF_ILD8150_DC_1.5A*	Reference design board 1.5 A with trough hole inductor	Board with ILD8150E	REFILD8150DC15ATOBO1
REF_ILD8150_DC_1.5A*	Reference design board 1.5 A	Board with ILD8150E	REFILD8150DC15ATOBO1
REF_TW_ILD8150E_60V_1A*	Reference board for professional tunable white and multichannel applications	Board with 2x ILD8150E	REFTWILD8150E60V1ATOBO1
REF_ILD8150_DC_1.5A_SMD*	Reference design board 1 A with SMD inductor	Board with 2x ILD8150E	REFILD8150DC15ASMDTOBO1

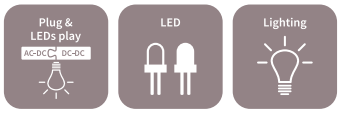

*See Plug & LEDs play, ideally to be combined with secondary-side boards

For more details on the product, click on the part number or contact our product support.

Linear current regulators

60 V linear LED controller IC with active headroom control for power- and cost-efficient linear regulation on DC-DC side

A unique feature of BCR601 is to provide feedback to the primary side via an optocoupler to control the output voltage of the primary side converter, e.g. XDPL8219 or ICL88xx. The integrated control loop minimizes the voltage overhead and power dissipation of the external driver transistor. This capability, coupled with the adjustment of voltage overhead by external configuration according to application needs, leads to power- and cost-efficient LED systems. AC line ripple suppression, analog dimming option and various protection features round up this device for LED drivers allowing for flicker-free light and longevity of LEDs.

Typical application schematic

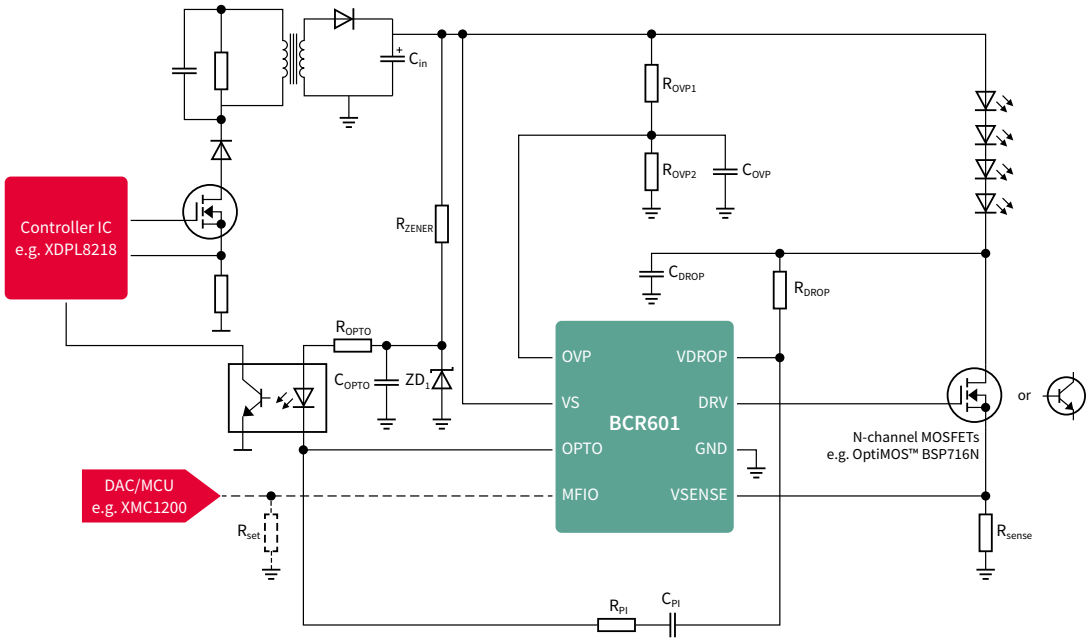

Features and benefits

Key features and benefits
› Active headroom control (supports an optocoupler feedback loop to primary side minimizing power losses)
› Dimming in pure analog mode down to 3%
› Suppresses the voltage ripple of the power supply driving a constant LED current for high light quality
› The embedded hot plug protection allows plug in and plug out of any LED load during operation without damaging the LEDs
› Supports wide current range depending on external driver transistor
› Supply voltage range up to 60 V
› Gate driver current 10 mA
› LED current can be adjusted by Rset functionality
› Overtemperature protection and adjustable overvoltage protection

Order information for BCR601

Type	Description	Ordering code
BCR601	60 V linear LED controller IC with voltage feedback to primary side	BCR601XUMA1
DEMO_BCR601_60V_IVCTRL*	Demonstration board BCR601 current and voltage control, 700 mA	DEMOBCR60160VIVCTRLTOBO1
REF_TW_BCR601_55V_0.5A*	Demoboard for design evaluation of Tunable White applications with cost-effective linear LED controllers, 500 mA	REFTWBCR60155V05ATOBO1

*See Plug & LEDs play, ideally to be combined with secondary-side boards

Plug & LEDs play

Lighting

For more details on the product, click on the part number or contact our product support.

BCR601/BCR602 – 60 V linear LED controller ICs for Tunable White plus active headroom control and flexible dimming

BCR601 is a linear controller that enables high efficiency at low cost as a second-stage LED controller to replace DC-DC buck converters especially in low- to mid-power LED drivers. The cost-effectiveness especially in multichannel designs can be further enhanced by using BCR602 in a tiny SOT23-6 package regulating the LED current for flicker-free deep dimming performance.

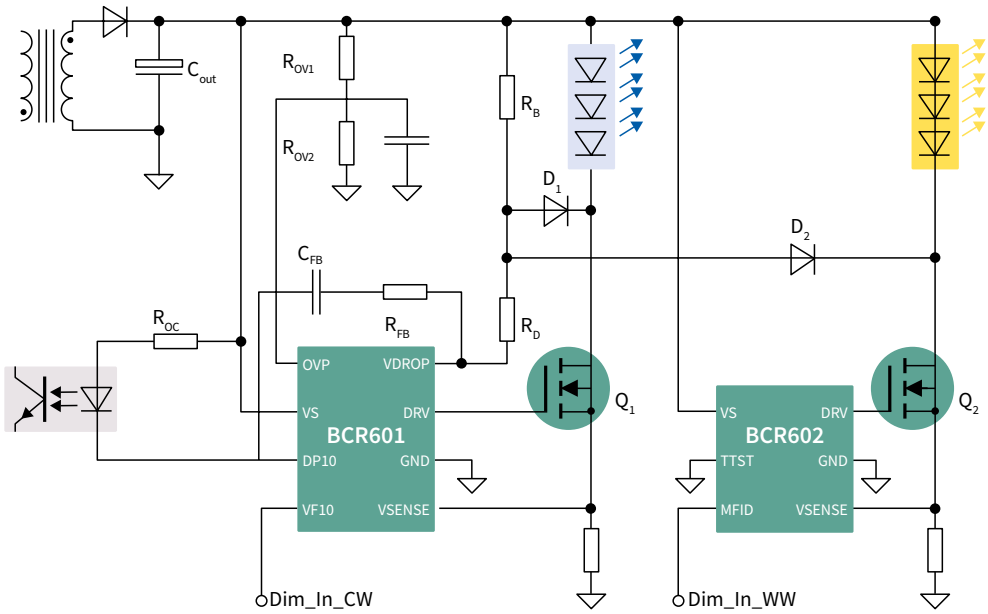

Features and benefits

Key benefits
› BCR601 as the master controller controls voltage overhead of both channels and current of one channel
› BCR602 as slave controller regulates current of second channel
› Input voltage up to 60 V
› Can be operated with either BJT or N-channel MOSFET
› Analog dimming down to 3%, PWM dimming down to 1% (BCR602)
› Current precision ±3%
› OTP, OVP, hot-plug protection

Key advantages
› Linear regulators give considerable cost advantage over buck topology
› Cost advantage increases with additional channels
› Efficiency can be on par with buck (depends on output ripple of first stage)
› Highest light quality, zero ripple
› Deep, full analog dimming
› Easy to extend to additional outputs (e.g. RGBW)

Order information

Type	Description	Ordering code
REF_TW_BCR601_55V_0.5A*	Demoboard for design evaluation of Tunable White applications with cost-effective linear LED controllers BCR601/BCR602, 500 mA	REFTWBCR60155V05ATOBO1
BCR601	60 V linear LED controller IC with voltage feedback to primary side	BCR601XUMA1
DEMO_BCR601_60V_IVCTRL*	Demonstration board BCR601 current and voltage control, 700 mA	DEMOBCR60160VIVCTRLTOBO1
BCR602	60 V linear LED controller IC	BCR602XTSA1
DEMO_BCR602_60V_ICTRL*	Demoboard for design evaluation of cost-efficient, highly reliable, dimmable LED engines/modules, 60 V, 200 mA	DEMOBCR60260VICTRLTOBO1

*See Plug & LEDs play, ideally to be combined with secondary-side boards

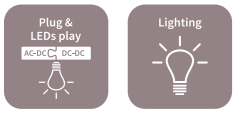

For more details on the product, click on the part number or contact our product support.

BCR40x and BCR43x linear LED driver ICs for low power LEDs

The BCR40x family is the smallest size and lowest cost series of LED drivers. These products are perfectly suited for driving low power LEDs in general lighting applications. Thanks to AEC-Q101 qualification, it may also be used in automotive applications such as brake lights or interior.

The advantage over resistor biasing is:

- Long lifetime of LEDs due to constant current in each LED string
- Homogenous LED light output independent of LED forward voltage binning, temperature increase and supply voltage variations

The advantage versus discrete semiconductors is:

- Reduced part count and assembly effort
- Pretested output current
- Defined negative temperature co-efficient protection

Needing more details on replacing resistors?

Download now the application note "Driving low power LEDs from 10 to 65 mA LED driver ICs with BCR401W and BCR402W family"

Features and benefits

Key features and benefits
Output current from 8 to 100 mA (adjustable by external resistor)
Supply voltage up to 18 V (BCR401W, BCR402W) and up to 40 V (BCR401U, BCR402U, BCR405U, BCR430U, BCR431U *
Reduction of output current at high temperature, contributing to long lifetime LED systems
Extra low voltage drop for more voltage headroom and flexibility in designs (BCR430U, BCR431U)
Excellent ESD performance on device and system level for BCR43xU
Very small form factor packages with up to 750 mW max. power handling capability

LED current versus voltage drop (V_S = 24 V)

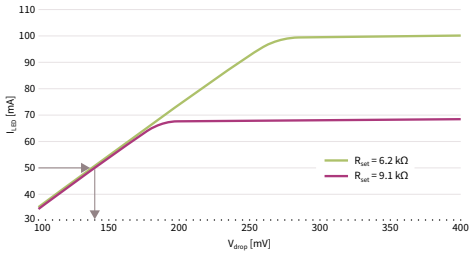

The voltage drop at the integrated LED driver stage can go down to 135 mV at 50 mA and less improving the overall system efficiency and providing extra voltage headroom to compensate for tolerances of LED forward voltage or supply voltage. With the BCR430U and BCR431U, additional LEDs can be added to lighting designs or longer LED strips can be created without changing the supply voltage.

Low-power LED driver ICs (5-100 mA)

Type	Group	Topology	V_s (min.) [V]	V_s (max.) [V]	I_{out} (typ.) [mA]	I_{out} (max.) [mA]	Dimming	Package	P_{tot} (max.) [mW]	Ordering code
BCR401U	LED drivers for low-power LEDs	Linear	1.4	40	10.0	65	PWM by external transistor	SC74	750	BCR401UE6327HTSA1
BCR401W	LED drivers for low-power LEDs	Linear	1.2	18	10.0	60		SOT343	500	BCR401WH6327XTSA1
BCR402U	LED drivers for low-power LEDs	Linear	1.4	40	20.0	65		SC74	750	BCR402UE6327HTSA1
BCR402W	LED drivers for low-power LEDs	Linear	1.4	18	20.0	60		SOT343	500	BCR402WH6327XTSA1
BCR405U	LED drivers for low-power LEDs	Linear	1.4	40	50.0	65		SC74	750	BCR405UE6327HTSA1
BCR430U *	LED drivers for low-power LEDs	Linear	6	42	Defined by R_{set}	100		SOT23	600	BCR430UXTSA2
BCR431U **	LED drivers for low-power LEDs	Linear	6	42	Defined by R_{set}	42		SOT23	600	BCR431UXTSA1

Type	Description	Ordering code
BCR430U LED BOARD	Low-power demoboard with 8 LEDs, 50 mA	BCR430ULEDBOARDTOBO11
DEMO_BCR431U_LVDROP	Low-power demoboard with 8 LEDs, 15 mA	DEMOBCR431ULVDROPTOBO1

* Ultra low voltage drop version BCR430U with only 135 mV at 50 mA
** Ultra low voltage drop version BCR431U with only 115 mV at 15 mA

Lighting

For more details on the product, click on the part number or contact our product support.

BCR32x/BCR42x/BCR450/BCR601/BCR602 linear LED driver and controller ICs for medium and high power LEDs

The BCR32x and BCR42x LED drivers are dedicated linear regulators for 0.5 W LEDs with a maximum output current of 250 mA. They are optimized in terms of cost, size and feature set for medium power LEDs in general lighting applications. Thanks to AEC-Q101 qualification, it may also be used in automotive applications such as brake lights or interior.

Typical application schematic

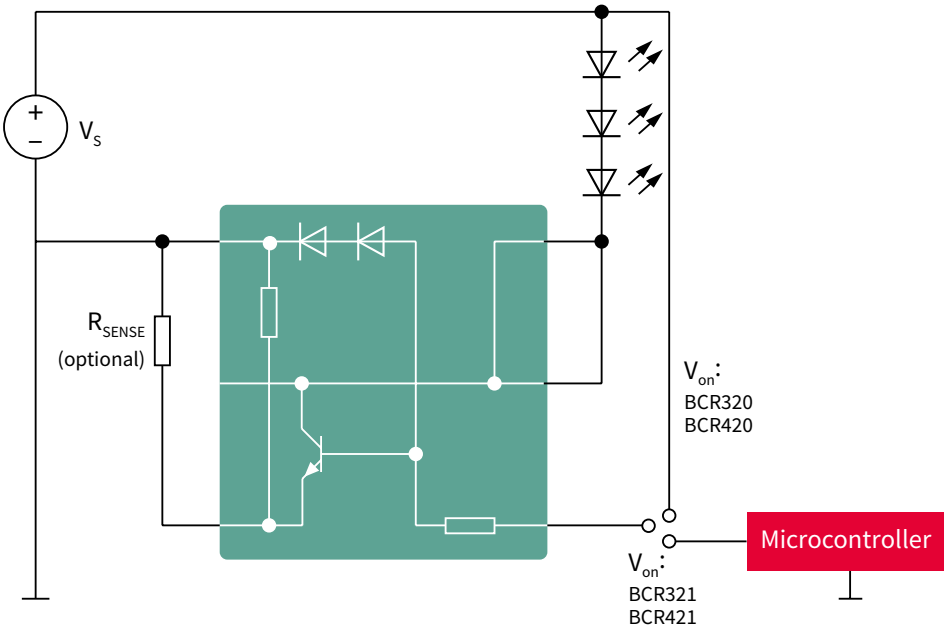

Features and benefits

Key features and benefits
› Output current from 10 mA up to 300 mA for BCR32x (200 mA for BCR42xU), adjustable by external resistor
› Supply voltage up to 40 V for BCR42x (24 V for BCR32x)
› Direct microcontroller interface for PWM dimming with BCR321U/BCR421U
› Reduction of output current at high temperature, contributing to long lifetime LED systems
› Dedicated 60 V devices targeting 48 V systems BCR601 for LED Driver/ BCR602 for LED Module
› Very small form factor packages with up to 1000 mW max. power handling capability

Medium- and high-power LED driver ICs

Type	Group	Topology	V_s (min.) [V]	V_s (max.) [V]	I_{out} (typ.) [mA]	I_{out} (max.) [mA]	Dimming	Package	P_{tot} (max.) [mW]	Ordering code
BCR320U	LED drivers for mid-power LEDs	Linear	1.4	24	250	300	No	SC74	1000	BCR320UE6327HTSA1
BCR321U		Linear	1.4	24	250	300	Digital input	SC74	1000	BCR321UE6327HTSA1
BCR420U		Linear	1.4	40	150	200	No	SC74	1000	BCR420UE6327HTSA1
BCR421U		Linear	1.4	40	150	200	Digital input	SC74	1000	BCR421UE6327HTSA1
BCR450	LED controller	Linear	3.0	27	70	Ext. switch	Digital input	SC74	500	BCR450E6327HTSA1
BCR601 [1)]	LED controller	Linear	8.0	60	Ext. switch	Ext. switch	Analog	PG-DSO-8	360	BCR601XUMA1
BCR602 [1)]	LED controller	Linear	8.0	60	Ext. switch	Ext. switch	Analog/PWM	PG-SOT23-6	360	BCR602XTSA1

1) See BCR601/BCR602 for detailed description

Lighting

For more details on the product, click on the part number or contact our product support.

CDM10V and CDM10VD – most flexible dimming interface ICs for 0-10 V input

Infineon's fully integrated dimming solutions

Infineon's CDM10V and CDM10VD are the industry's first single-chip lighting interface ICs. They are capable of transforming an analog 0–10 V input into a PWM or dimming input signal, required by a lighting controller IC. CDM10V and CDM10VD devices are dedicated for commercial and industrial LED lighting applications. The compact and highly integrated devices allow designers to replace up to 25 discrete components, used in conventional 0–10 V dimming schemes, with a single device. Supplied in an ultra-miniature 6-pin SOT package, the CDM10Vx and CDM10VDx perfectly match small PCBs with high component densities.

Typical application schematic using CDM10V

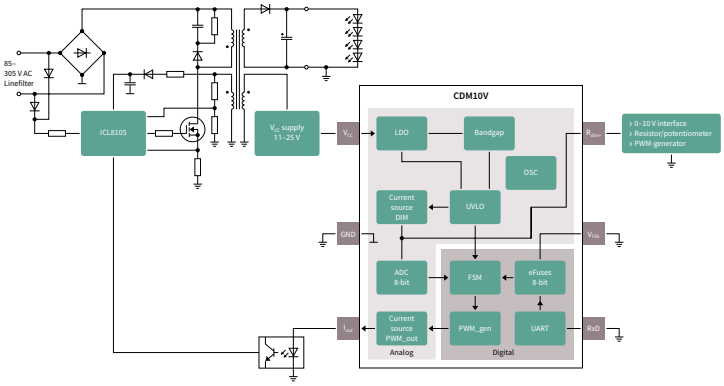

Features and benefits

Key benefits
› Active dimming (0–10 V) and passive dimming (resistor)
› Embedded digital signal processing which maintains minimum variations from device to device
› PWM input
› One-time configurable device: CDM10V and preconfigured devices with various feature sets

Key advantages
› Single-device solution leading to low BOM and PCB savings
› Dimming ICs in small SOT-23 package for high power density designs
› Granular portfolio for highest flexibility and easy design-in
› Wide input V_{CC} range 11–25 V, extended range down to 6 V for CDM10V
› Attractive pricing and faster time to market

Product type	I_{out} [mA]	Min. duty cycle [%]	PWM output frequency [kHz]	Dimmer/resistor bias current [µA]	Dimm-to-Off	Ordering code
CDM10V	5	1/2/**5**/10	0.2/0.5/**1**/2	50/100/**200**/500	**Disabled**/enabled	CDM10VXTSA1
CDM10V-2	5	n.a.	1	200	Enabled	CDM10V2XTSA1
CDM10V-3	5	1	1	200	Disabled	CDM10V3XTSA1
CDM10V-4	5	n.a.	2	100	Enabled	CDM10V4XTSA1
CDM10VD	5	5	1	120	Enabled	CDM10VDXTSA1
CDM10VD-2	5	10	1	120	Enabled	CDM10V2DXTSA1
CDM10VD-3	1	5	1	120	Enabled	CDM10V3DXTSA1
CDM10VD-4	1	10	1	120	Enabled	CDM10V4DXTSA1

Board name	Description	Ordering code
COOLDIM_PRG_BOARD	Configuration board for CDM10V only	COOLDIMPRGBOARDTOBO1
REF-XDPL8105-CDM10V	40 W single stage PFC FB digital power reference design with CDM10V	REFXDPL8105CDM10VTOBO1

For more details on the product, click on the part number or contact our product support.

NFC-PWM configuration ICs

Dual-mode NFC wireless configuration ICs with CLO function and pulse width modulation (PWM) output for lighting applications

The NLM0011 is a dual-mode NFC wireless configuration IC with PWM output. It is compatible with existing analog LED-driver designs and with the NFC-programming specification from the Module-Driver Interface Special Interest Group (MD-SIG). This device is primarily designed for LED applications to enable NFC programming. In addition, advanced features such as the constant lumen output (CLO) as well as the on/off counting are integrated, and there is no need for an additional microcontroller. Since the NLM0011 is designed to work together with mainstream analog driver ICs, there are no firmware development efforts needed. It can be easily adapted into existing designs to replace the "plug-in resistor" current configuration concept. The NLM0010 is a light version without CLO function.

Typical example of NFC lighting application

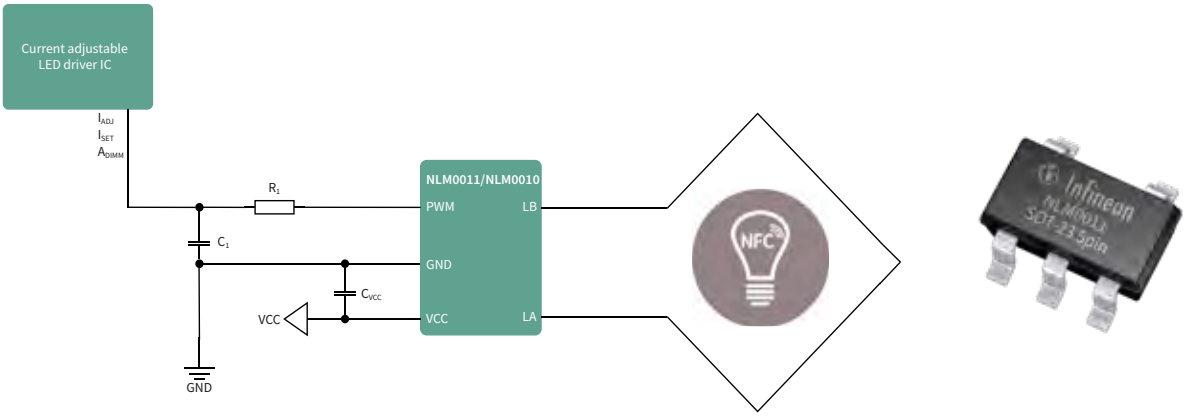

Features and benefits

Key benefits
› Configurable pulse width modulation (PWM) output
› NFC contactless interface compliant to ISO/IEC 18000-3 mode 1 (ISO/IEC 15963)
› Constant light output (CLO) with 8 configurable points
› Integrated operation-time counter (OTC) and on/off counter
› Non-volatile memory (NVM) including UID and 20 bytes free memory for user data

Key advantages
› Fast and cost effective implementation of NFC programming and CLO without the need of an additional microcontroller
› Compatible with most analog LED driver designs using "plug-in resistor" method
› Stable PWM output with fixed 2.8 V amplitude and +/-0.1% duty cycle accuracy
› Internal voltage regulator (LDO) to avoid influence of instable external supply voltage

EVAL_NLM0011_DC – evaluation board demo kit

This evaluation board not only enables fast demonstration of NFC-PWM configuration ICs with NLM0011 through the NFC-PWM mobile app, but also accelerates the development of the NFC-reader software. EVAL_NLM0011_DC does not require a full system, but allows NFC configuration for existing LED driver boards.

Ordering code: EVALNLM0011DCTOBO1

Type	Description	Package	Ordering code
NLM0011	Dual mode NFC configuration IC with PWM output and CLO function	SOT23-5	NLM0011XTSA1
NLM0010	Dual mode NFC configuration IC with PWM output, without CLO function	SOT23-5	NLM0010XTSA1

Smart city lighting

Lighting

For more details on the product, click on the part number or contact our product support.

CIPOS™ IPM family

CIPOS™ Intelligent Power Modules in different packages, voltage and current classes

Infineon has a broad portfolio of integrated power modules (IPMs) with different semiconductors combined in various packages in varying voltage and current classes. These IPMs are separated into Compact, Standard and Performance families.

Part of the IPMs is divided into the CIPOS™ Nano, CIPOS ™ Micro, CIPOS™ Tiny, CIPOS ™ Mini and CIPOS™ Maxi families. The CIPOS™ IPMs are families of highly integrated, compact power modules designed to drive motors in applications ranging from home appliances, fans, pumps, HVAC to industrial drives. These energy-efficient intelligent power modules integrate the latest power semiconductor and ICs technologies

CIPOS™ product overview

CIPOS™ Nano	CIPOS™ Micro	CIPOS™ Tiny	CIPOS™ Mini	CIPOS™ Maxi
MOSFET 40/100/250/500/600 V	MOSFET: 250/500 V IGBT: 600 V, 3/4/6 A	IGBT: 600V, 6/10/15/20 A	IGBT: 600 V, 4-30 A MOSFET: 600 V	IGBT: 1200 V, 5/10/15 A CoolSiC™ MOSFET: 1200 V, 20 A
	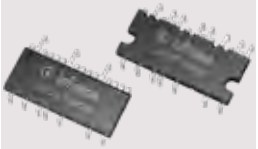	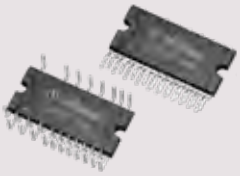	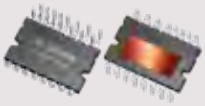	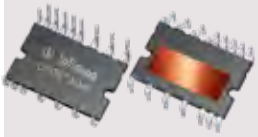
7 x 8 x 0.9 mm 7 x 9 x 0.9 mm 12 x 10 x 0.9 mm 12 x 12 x 0.9 mm	29 x 12 x 2.9 mm	34 x 15 x 3.8 mm	36 x 21 x 3.1 mm	36 x 23 x 3.1 mm

Compact IPM → Standard IPM → Performance IPM

Motor current

0.1 A_{rms} ——► **30 A_{rms}**

Key benefits

- Shorter time-to-market
- Increased reliability
- Reduced system design complexity
- Improved manufacturability

CIPOS™ Nano

Ultra compact three-phase or half-bridge MOSFET IPMs

The ultra-compact CIPOS™ Nano is a family of highly integrated power modules for high-efficiency consumer and light industrial applications. With half-bridge and three-phase configurations, CIPOS™ Nano is designed for the rectifier, converter, and inverter stage in power management circuits and motor drives for applications like fans, hair dryers, air purifiers, and circulation pumps. By implementing an innovative Power QFN package, which utilizes PCB copper traces to dissipate heat from the module, CIPOS™ Nano family delivers a new benchmark in device size, offering up to a 60 percent smaller footprint than existing three-phase motor control power IPMs.

The family is comprised of a series of fully integrated three-phase or half-bridge surface-mount motor control circuit solutions. The new alternative approach utilizes PCB copper traces to dissipate heat from the module, providing cost savings through a smaller package design and even eliminating the need for an external heat sink.

Features and benefits

Key benefits
› Various switch technologies such as HEXFETs, Trench FREDFETs, Trench MOSFETs, CoolMOS™ and OptiMOS™ apply to motor drivers
› Multiple package platforms with various topologies to suitable for a variety of application scenarios
› Integrated bootstrap functionality and gate drivers
› Realize a variety of protection (overcurrent protection, under-voltage lockout, over-temperature protection, fault reporting and etc.)
› Accessible for heat sink-less operation

Key advantages
› Smallest modules in the market
› Cost savings from smaller footprint and reduced PCB space
› Easy implementation of 2 or 3-phase motor drives
› Half bridge configuration enables more flexible board design w/better thermal performance
› Same PCB footprint to address multiple application markets (100 V_{AC} – 230 V_{AC})

Key applications

- Residential circulation pump
- Hair dryer
- Ceiling fan
- Air purifier
- CPAP machine

Package overview

QFN 7x8 7 x 8 x 0.9 mm	QFN 8x9 8 x 9 x 0.9 mm	QFN 12x10 12 x 10 x 0.9 mm	QFN 12x12 12 x 12 x 0.9 mm
			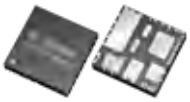

CIPOS™ Micro

Solution for low power motor drive applications

CIPOS™ Micro is a family of compact, three-phase IPMs (intelligent power modules) for low-power (i.e. up to 500 Watts with heatsink) motor drive applications including ventilation fans, circulation pumps, air purifiers, dishwashing machines, and refrigerator compressor drives. CIPOS™ Micro has several protection features including precise overcurrent protection and a UL-certified temperature sensor. Available in both surface mount and through-hole configurations, the family features rugged and efficient high voltage MOSFETs and IGBTs specially optimized for variable frequency drives with voltage ratings of 250 V-600 V. Also, these IPMs utilize high-voltage gate drivers tuned to achieve an optimal balance between EMI and switching losses.

Features and benefits

Key features	Key benefits
› Wide range of product coverage with various switch technologies	› Save system space and cost
› 3 lead-form options	› Offer application optimized solution for both fast switching and low EMI version
› Compatible with mass-market TO-2xx heat sinks and clips	› Improve system ruggedness thru enhanced protection features & isolation voltage

Key applications

- Refrigerator
- Washing machine
- Room air conditioning
- Fan and pump
- General purpose drive

Package overview

DIP 29x12 29 x 12 x 3.1 mm	DIP 29x12F 29 x 12 x 3.1 mm	SOP 29x12 29 x 12 x 3.1 mm	SOP 29x12F 29 x 12 x 3.1 mm
	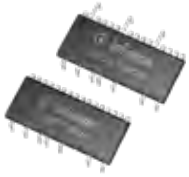		

CIPOS™ Tiny

Maximum efficiency and design flexibility

The energy-efficient CIPOS™ Tiny is a family of advanced IPMs (Intelligent Power Modules) developed with a focus on higher module efficiency and long-term reliability. The combined benefits of advanced trench IGBT technology and optimized package design have enabled us to achieve best-in-class efficiency and improved reliability, along with minimized system size and cost. Integrating discrete power semiconductors and drivers into one package allows designers to reduce the time and effort spent on design, significantly reducing the time-to-market. CIPOS™ Tiny offers a high-performance AC motor-drive solution for applications such as washing machines, air conditioners, refrigerators, and industrial drives ranging from 6 A to 20 A current requirements.

A built-in high precision temperature monitor and over-current protection feature, along with short-circuiting rated IGBTs and an integrated under-voltage lockout function, deliver a high level of protection and fail-safe operation. System mechanical design flexibility is also considered by offering both CIPOS™ Tiny SIP and DIP form factors.

Features and benefits

Key features	Key benefits
› Compact IPM with current rating up to 20 A	› Offer excellency thermal performance
› Over current shutdown	› Offer better design flexibility with various lead length options
› Built-in temperature sensor	› Offer system size and cost saving
› Low power losses, efficient operation, short circuit rated	
› Under-voltage lockout and shutdown pin	

Key applications

- Refrigerator
- Washing machine
- Fan and pump
- General purpose drive

Package overview

DIP 24x15 34 x 15 x 3.8 mm	SIP 34x15 34 x 15 x 3.8 mm

CIPOS™ Mini

Broad range of configurations from PFC to inverter

CIPOS™ Mini is a family of high efficient intelligent power modules that has the highest power density with 4 A to 30 A rated products built into a single package platform. It integrates various power and control components to increase reliability, and optimize PCB size and system costs. Utilizing multiple configurations, CIPOS™ Mini IPMs apply to a wide range of applications to control variable speed drives, such as air conditioners, washing machines, refrigerators, vacuum cleaners, compressors, and industrial drives up to 3 kW.

The configurations offered within the CIPOS™ Mini family are 2-phase MOSFET, 3-phase MOSFET, and IGBT, integrated PFC, and 2-phase and 3-phase interleaved PFC. All options include an integrated gate driver and a built-in temperature sensor. CIPOS™ Mini provides optimized performance for power applications, which need good thermal conduction and electrical isolation, but also EMI-safe control, innovative FAULT indication, and overload protection.

Our TRENCHSTOP™ IGBTs, reverse-conducting IGBTs, or CoolMOS™ power MOSFETs are combined with newly optimized Infineon SOI gate driver IC for excellent electrical performance. Also, CIPOS™ Mini family offers IPMs with DCB substrates, improving heat dissipation to provide higher power capability.

Features and benefits

Key features	Key benefits
› Wide range of current rating: 4 A to 30 A	› Lower PCB size and system cost
› High integration (bootstrap circuit, thermistor, single boost PFC)	› Easy power extension from 300 W to 3 kW
› Optimized for target application requirements (separate version for washing machine and air conditioner)	› Optimized performance for each application
	› UL certified package and temp sensor

Key applications

- Refrigerator
- Washing machine
- Room air conditioning
- Fan and pump
- General purpose drive

Package overview

DIP 36x21 36 x 21 x 3.1 mm	DIP 36x21D 36 x 21 x 3.1 mm
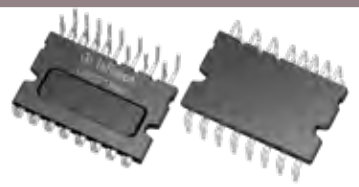	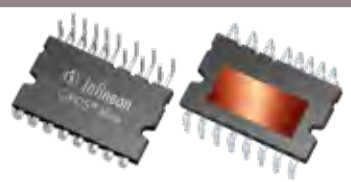

CIPOS™ Maxi

Smallest package in 1200 V IPM class while still offering high power density and best performance

The high-performance CIPOS™ Maxi intelligent power modules (IPMs) integrate various power and control components to increase reliability, optimize PCB size and system costs. CIPOS™ Maxi IPMs are designed to control three-phase AC motors and permanent magnet motors in variable speed drive applications such as low-power industrial motor drives, pumps, fan drives, and active filters for HVAC (heating, ventilation, and air conditioning). The product concept is specially adapted to power applications, which need excellent thermal performance and electrical isolation as well as meeting EMI requirements and overload protection.

The existing IGBT-based portfolio IM818 series offers 5 A and 15 A in 1200 V class up to 3.0 kW power rating. In 2020, the first 1200 V Silicon Carbide IPM IM828 series in the same package based on CoolSiC™ MOSFET technology was launched, it can offer over 4.8 kW power rating. CIPOS™ Maxi has achieved the smallest package in 1200 V IPM class while still offering high power density and the best performance.

Features and benefits

Key benefits
› Fully isolated dual in-line molded module with DCB
› 1200 V TRENCHSTOP™ IGBT 4
› Rugged 1200 V SOI gate driver technology
› Integrated booststrap functionality
› Overcurrent shutdown
› Under-voltage lockout at all channels
› All of six switches turn-off during protection
› Cross-conduction prevention
› Independent NTC for temperature monitoring
› Allowable negative VS potential up to -11 V for signal transmission at V_{BS} of 15 V
› Low side emitter pins accessible for all phase current monitoring (open emitter)
› Programmable fault clear timing
› Enable input

Key advantages
› The smallest package size in 1200 V IPM class with high power density and best performance
› Enhanced robustness of gate driver technology for excellent protection
› High efficiency
› Adapted to high switching application with lower power loss
› Simplified design and manufacturing
› Time-to-market

Key applications

- Fan and pump
- HVAC outdoor fan
- Low-power general purpose drives (GPI, servo drive)
- Active filter (active power factor correction) for HVAC

Package overview

DIP36x23D
36 x 22.7 x 3.1mm

CIPOS™ IPM product portfolio

MOSFET based CIPOS™ IPMs					
Product family	Voltage [V]	Configuration	$R_{DS(on)}$ max. [Ω]	Package	Product name
CIPOS™ Nano	40	Half-bridge	0.005	QFN 7x8	IRSM005-800MH
	100	Half-bridge	0.021	QFN 7x8	IRSM005-301MH
	250	H-bridge	0.073	QFN 12x10	IM111-X3Q1B
		Half-bridge	0.15	QFN 8x9	IRSM808-204MH
		3-phase inverter	0.45 ~ 2.40	QFN 12x12	IRSM836-084MA/IRSM836-044MA IRSM836-024MA
	500	Half-bridge	0.80/1.70	QFN 8x9	IRSM807-105MH/IRSM808-105MH IRSM807-045MH
		3-phase inverter	1.70 ~ 6.00	QFN 12x12	IRSM836-045MA/IRSM836-035MA/IRSM836-035MB IRSM836-025MA/IRSM836-015MA
	600	H-bridge	0.31	QFN 12X10	IM111-X6Q1B
CIPOS™ Micro	250	3-phase inverter	2.40	DIP 29x12F	IRSM5x5-024DA [1]
			2.40	SOP 29x12F	IRSM5x5-024PA [1]
	500		1.30 ~ 6.00	DIP 29x12F	IRSM5x5-065DA/IRSM5x5-055DA [1] IRSM5x5-035DA/IRSM5x5-025DA [1] IRSM5x5-015DA [1]
			1.30 ~ 6.00	SOP 29x12F	IRSM5x5-065PA/IRSM5x5-055PA [1] IRSM5x5-035PA/IRSM5x5-025PA [1] IRSM5x5-015PA [1]
CIPOS™ Mini	600	2/3-phase inverter	0.33	DIP 36x21	IM512-L6A/IM513-L6A
CIPOS™ Maxi	1200	3-phase inverter	0.055	DIP 36x23	IM828-XCC

IGBT based CIPOS™ IPMs					
Product family	Voltage [V]	Configuration	Rated current [A]	Package	Product name
CIPOS™ Micro	600	3-phase inverter	2.0/4.0/6.0	DIP 29x12	IM231-M6T2B/IM231-L6T2B IM241-S6T2B/ IM241-M6T2B/ IM241-M6T2B [4] * IM241-S6T2J/ IM241-M6T2J [4] * IM241-S6T2B2/ IM241-M6T2B2/ IM241-M6T2B2 [4] * IM241-ST2J2 */IM241-S6T2J2 [4]*
			2.0/4.0/6.0	SOP 29x12	IM231-M6S1B/IM231-L6S1B IM241-S6S1B/ IM241-M6S1B/ IM241-M6T2B [4] * IM241-S6S1J/ IM241-M6S1J [4] *
CIPOS™ Tiny	600	3-phase inverter	6.0~20.0	DIP 34x15	IM393-S6Ey/IM393-M6Ey/IM393-L6Ey/IM393-X6Ey [2]
				SIP 34x15	IM393-S6Fz/IM393-M6Fz/IM393-L6Fz/IM393-X6Fz [3]
CIPOS™ Mini	600	PFC integrated	10.0~20.0	DIP 36x21D	IFCM10S60GD/IFCM10P60GD IFCM15S60GD/IFCM15P60GD IM564-X6D
		3-phase inverter	4.0 ~ 30.0	DIP 36x21	IGCM04F60GA/IGCM04G60GA IGCM06F60GA/IGCM06G60GA IGCM10F60GA/IKCM10H60GA/IKCM10L60GA IGCM15F60GA/ICM15L60GA/IKCM15F60GA/IKCM15H60GA IGCM20F60GA/IKCM20L60GA IKCM30F60GA
			15.0 ~ 30.0	DIP 36x21D	IKCM15L60GD/IKCM20L60GD/IKCM30F60GD [2] IM535-U6D
		Single boost PFC + inverter	10.0~20.0	DIP 36x21D	IFCM10S60GD/IFCM10P60GD IFCM15S60GD/IFCM15P60GD IM564-X6D
	650	3-phase interleaved PFC	20.0	DIP 36x21D	IFCM20T65GD/IFCM20U65GD
		2-phase interleaved PFC	30.0	DIP 36x21D	IFCM30T65GD/IFCM30U65GD
CIPOS™ Maxi	1200	3-phase inverter	5.0 ~ 15.0	DIP 36x23D	IM818-SCC/IM818-MCC/IM818-LCC

1) x = 0 (with NTC), x = 1 (without NTC)

2) y= blank (with 5.55mm lead length) y=2 (with 2.90mm lead length), y=3 (with 3.60mm lead length)

3) z= blank (SIP without lead covering), z=FP (SIP with covered lead)

4) Coming soon

*For more information on the product, contact our product support

For more details on the product, click on the part number or contact our product support.

Motor control ICs

Solutions for motor control systems in automotive, consumer and industrial applications

iMOTION™ products for industrial and consumer motor control applications
iMOTION™ products are offered in several integration levels on both hardware as well as software. The hardware integration ranges from stand-alone motor controllers up to fully integrated inverters in the SmartIPMs. On software offering, Infineon is providing full turnkey solutions as well as freely programmable modules. Using the turnkey products that are based on the patented and field proven motor control engine (MCE) and assisted by powerful tools like MCEWizard and MCEDesigner the implementation of a variable speed drive is reduced to configuring the respective motor. Infineon provides complete solutions for motor control with its combined offering of iMOTION™ together with EiceDRIVER™ gate drivers, TRENCHSTOP™ IGBTs, CoolMOS™ MOSFETs and CIPOS™ IPMs.

DC and BLDC motor driver ICs
Power bridges for all kind of motors in automotive and industrial applications from 100 mA up to 70 A with different feature sets scaled to your needs. Choose from our single and multi half-bridge ICs, integrated full-bridge drivers, Motor System ICs or multi MOSFET drivers.

Embedded Power ICs (system-on-chip)
Embedded Power ICs based on Arm® Cortex®-M integrate on a single die a 32-bit microcontroller, non-volatile flash memory, analog and mixed-signal peripherals, communication interfaces along with driving stages needed for either relay, half-bridge or full-bridge DC and BLDC motor applications. The devices are specifically designed to enable motor control applications where a small package form factor and a minimum number of external components are essential. See more on Embedded Power ICs solutions in the Microcontroller section.

iMOTION™

Flexible and scalable platform for motor control solutions

iMOTION™ products integrate all required hardware and software functions for the control of a variable speed drive (VSD). Infineon's field proven Motion Control Engine (MCE) eliminates software coding from the motor control development process reducing the research and development efforts to the configuration for the respective motor. The MCE implements highly efficient control of the motor and an optional power factor correction (PFC) and integrates all necessary protections and a flexible scripting engine. Configuration options allow the use of single or leg shunt current measurement as well as sensorless or hall-based field oriented control (FOC). Assisted by powerful tools like MCEWizard and MCEDesigner it is possible to have the motor up and running in less than an hour. Integrated support for functional safety for home appliances paves the way to meet regulations in the global market.

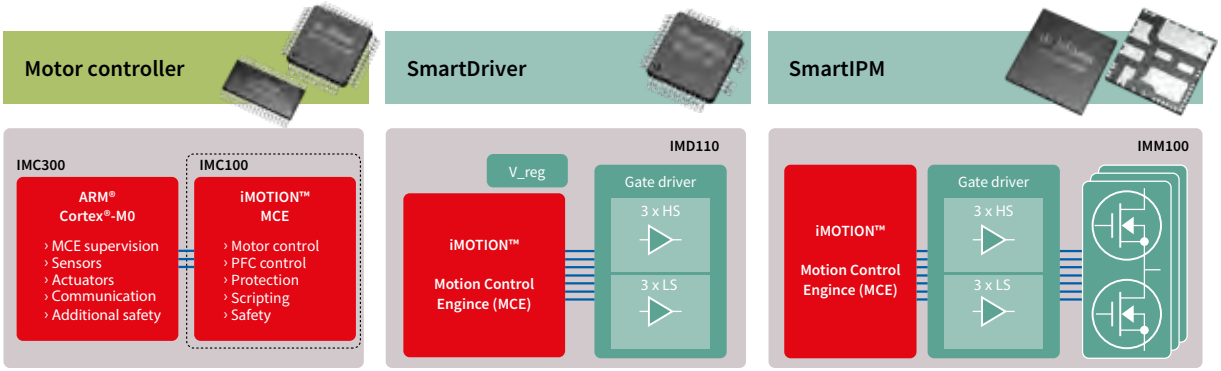

IMC100/IMC300	IMD110	IMM100/IMI110
MCE + optional MCU motor + PFC control, protection, scripting engine	**MCE + three phase gate driver** Motor + PFC control, SOI gate driver 20…600 V	**Full 3-phase inverter system** Controller, gate driver, power stage compact package up to ~80 W

Features and benefits

Key features	Key benefits
› Ready-to-use and field-proven motor control solution	› Fastest time to market
› Multiple integrated protection features	› Easy to use – no motor control coding required
› Functional safety acc. IEC/UL 60730 supported	› High performance and energy-optimized solution
› Scalable - from motor to scripting, PFC and additional MCU	› Reduced cost of ownership due to R&D savings
› Various integration levels - from motor controller to SmartIPM	› Easy adaptation to differing application requirements
› iMOTION™ controller – run with any gate driver and power stage	› Highest flexibility for low or high voltage drives
› iMOTION™ SmartIPM – highest integration level	› Reduced system cost due to minimum BOM count and PCB size

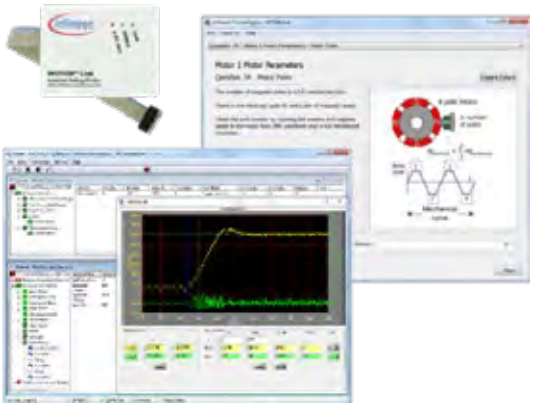

PC tools and evaluation kits are available to configure, test and fine-tune the drive inverter.

MCEWizard
SW tool to generate initial drive control parameters

MCEDesigner
SW tool to test, monitor and fine-tune the motor drive including trace features for live monitoring

iMOTION™ Link
Isolated debug interface to iMOTION™ devices

iMOTION™ Modular Application Design Kit

Infineon's motor control evaluation platform

The iMOTION™ Modular Application Design Kit (MADK) evaluation platform targets variable speed-drive applications up to 2 kW. The platform offers a modular and scalable system solution with different control board options and a wide range of power boards. Using the iMOTION™ MADK standardized platform interfaces, different control and power boards can be combined in a system that perfectly meets the requirements of the application. This modular approach allows developers maximum flexibility and scalability during evaluation and development phase at affordable costs.

While the M1 platform provides control of a permanent magnet synchronous motor (PMSM), the M3 platform additionally includes the power factor correction (PFC) implemented as a CCM boost PFC. Boards with M7 connector are available with and without PFC.

M1/M3 MADK platform

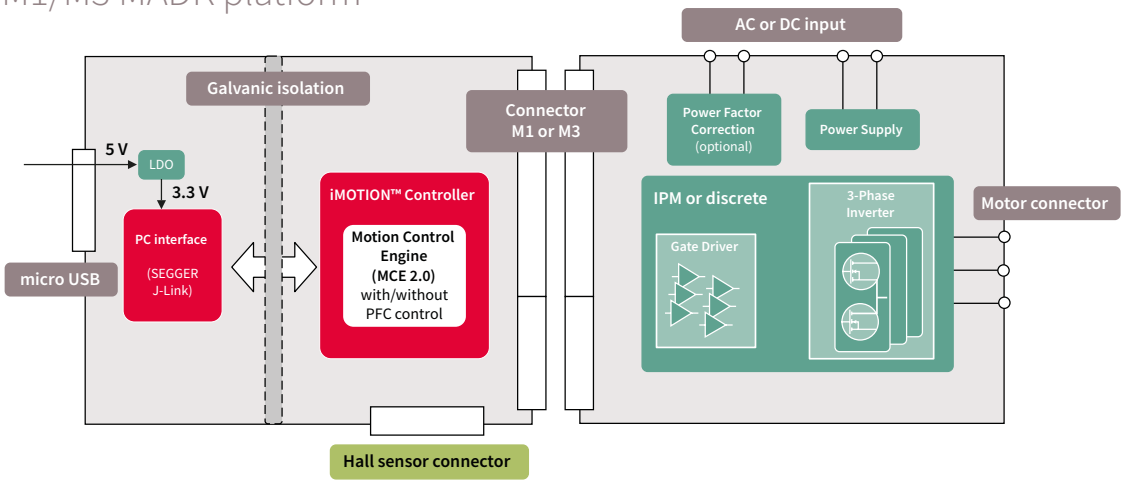

M7 SmartDriver platform

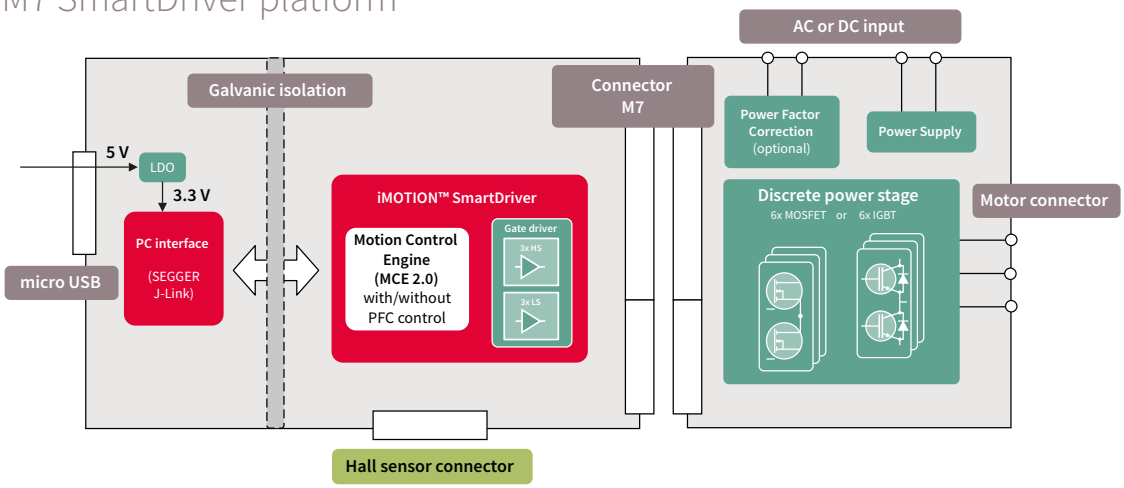

Further information, datasheets and documents
www.infineon.com/MADK

For technical assistance
www.infineon.com/support

Single half-bridge IC

Protected high current half-bridge for industrial applications

The NovalithIC™ provides a complete, low-ohmic protected half-bridge in a single package (typ. path resistance at 25°C down to 10 mΩ). It can also be combined with an additional NovalithIC™ to create a H-bridge or three-phase bridge. The NovalithIC™ family has the capability to switch high-frequency PWM while providing overcurrent, overvoltage and overtemperature protection. The NovalithIC™ family offers cost-optimized, scalable solutions for protected high-current PWM motor drives with very restrictive board space. Due to the P-channel high-side switch the need for a charge pump is eliminated thus minimizing EMI. The latest addition to the NovalithIC™ family is the IFX007T, which is optimized for industrial applications.

Application example for high-current PWM motor drives

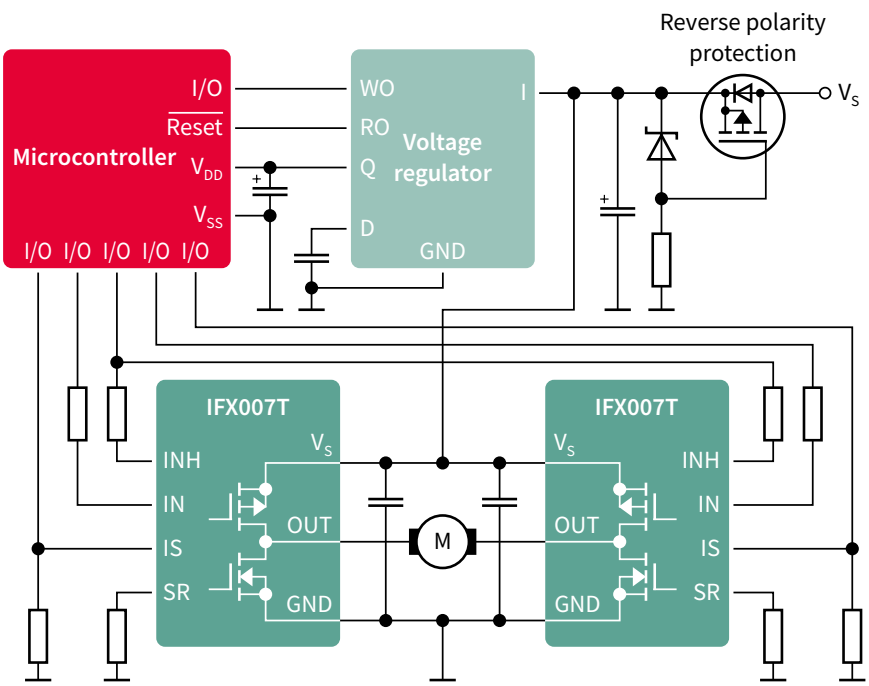

High current H-bridge

Features

Basic features
› Low quiescent current
› Capable for high PWM frequency
› Logic level input
› Adjustable slew rate
› Cross-current protection

Protection features
› Overtemperature shutdown
› Overvoltage shutdown
› Undervoltage
› Overcurrent

Diagnostic features
› Overtemperature
› Overvoltage
› Current sense and status

Product number	Operating range [V]	$R_{DS(on)}$ path (typ.) [mΩ]	$I_{D(lim)}$ (typ.) [A]	I_q (typ.) [µA]	Switch time (typ.) [µs]	Diagnosis	Protection	Package	Qualification
IFX007T	5.5 ... 40.0	10.0	70	7	0.25	OT, OC, CS	UV, OT, OC	PG-TO-263-7	JESD471

CS = Current sense OC = Overcurrent OT = Overtemperature UV = Undervoltage

For more details on the product, click on the part number or contact our product support.

BLDC Motor Control Shield with IFX007T for Arduino

The BLDC Motor Control Shield is a high current motor control board compatible with Arduino and Infineon's XMC4700 Boot Kit. It is equipped with three smart IFX007T half-bridges. The BLDC Motor Control Shield is capable to drive one BLDC motor. Alternatively, it can be used to drive one or two bidirectional DC motors (H-Bridge configuration, cascaded to support second motor) or up to three unidirectional DC motors (half-bridge configuration). The implemented integrated NovalithIC™ IFX007T half-bridges can be controlled by a PWM via the IN-pin.

Features

Key features
Capable of high frequency PWM, e.g. 30 kHz
Adjustable slew rates for optimized EMI by changing external resistor
Driver circuit with logic level inputs
Diagnosis with current sense

Target applications

- Brushed DC motor control up to 250 W continuous load
- 24 V nominal input voltage (max. 6 V–40 V)
- Average motor current 30 A restricted due to PCB (IFX007T current limitation @ 55 A min.)

BLDC-SHIELD_IFX007T

BLDC motor control with half-bridge IFX007T

Infineon's shields for Arduino are compatible with microcontroller boards using the Arduino-compatible form factor, e.g. Infineon's XMC™ microcontroller kits.

Ordering code: BLDCSHIELDIFX007TTOBO1

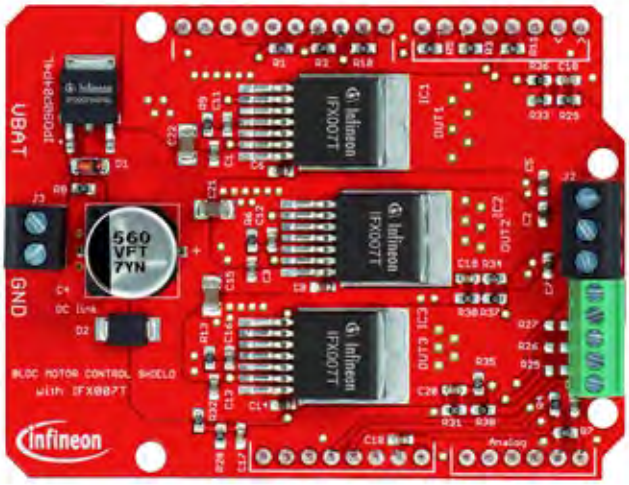

For more details on the product, click on the part number or contact our product support.

Multi half-bridge ICs

Extensive offering ranging from two-fold half-bridge ICs to twelve-fold half-bridge ICs

The TLE94xyz are protected half-bridge drivers designed for 12 V motion control applications such as small DC motors for heating, ventilation and air conditioning (HVAC), as well as automotive mirror adjustment and fold. The family offers two-, three-, four-, six-, eight-, ten-, and twelve-fold integrated half-bridge driver. All devices can drive DC motor loads up to 0.9 A per output or the outputs can be used stand-alone or combined to increase driving capability up to 3.6 A. They provide diagnosis of short circuit, open load, power supply failure and overtemperature for each half-bridge to ensure safe operation in HVAC or other systems. The TLE94xyz offers enhanced EMC performance, which in combination with the low quiescent current and a small package makes the product attractive for a wide range of 12 V automotive and industrial applications. In addition to TLE94xyz, Infineon´s multi half-bridge offerings includes a dual-half-bridge driver, TLE4207G.

Infineon's portfolio of multi half-bridge ICs

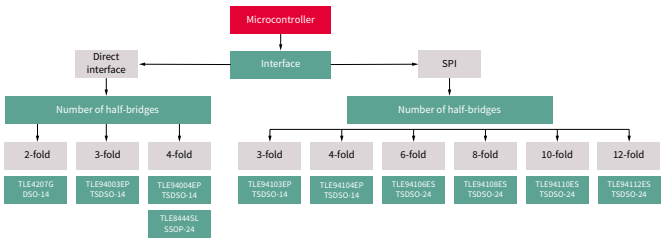

Block diagram TLE94112ES

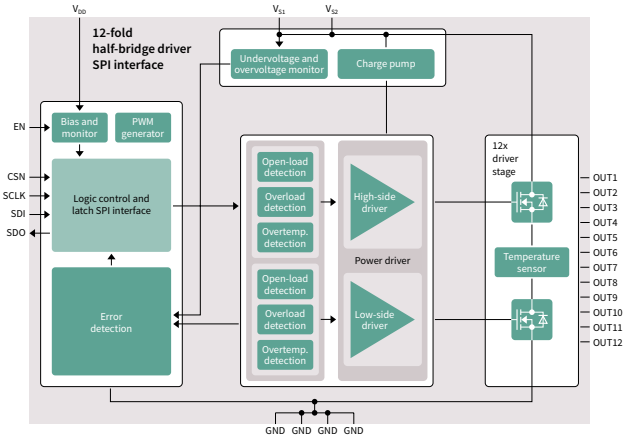

Features and benefits

Key features and benefits
› Three-, four-, six-, eight-, ten-, and twelve-fold half-bridges with integrated output stages and PWM
› 16-bit SPI or direct inputs for control and diagnosis
› Voltage supply range: 5.5– 20 V
› Variable driving schemes for up to 11 motors

Key applications

- 12 V automotive and industrial applications
- Flap motors in HVAC systems
- Mirror adjustment and fold
- Small DC motors (≤ 0.9 A/output)
- Bistable relays
- Bipolar stepper motors in full-step and half-step mode

Product name	Config.	$I_{L(NOM)}$ [A]	$I_{L(lim)}$ [A]	I_q [µA]	$V_{S(OP)}$ [V]	Protection	Diagnostic interface	Highlights	$V_{CE(sat)}$/ $R_{DS(on)}$ [mΩ]	Package
TLE94003EP	3 x half-bridge	3 x 0.30	3 x 0.90	0.6	5.5 to 20	OC, OT, VS, UV/OV	Error flag	TLE94xyz family concept + small package	850/switch	TSDSO-14-
TLE94103EP	3 x half-bridge	3 x 0.30	3 x 0.90	0.6	5.5 to 20	OC, OT, OL, VS, UV/OV	16-bit SPI	TLE94xyz family concept + small package		TSDSO-14-
TLE94004EP	4 x half-bridge	4 x 0.30	4 x 0.90	0.6	5.5 to 20	OC, OT, VS, UV/OV	Error flag	TLE94xyz family concept + small package		TSDSO-14-
TLE94104EP	4 x half-bridge	4 x 0.30	4 x 0.90	0.6	5.5 to 20	OC, OT, OL, VS, UV/OV	16-bit SPI	TLE94xyz family concept + small package		TSDSO-14-
TLE94106ES	6 x half-bridge	6 x 0.30	6 x 0.90	0.6	5.5 to 20	OC, OT, OL, VS, UV/OV	16-bit SPI	TLE94xyz family concept + backwards compatible to TLE84106EL		TSDSO-24
TLE94108ES	8 x half-bridge	8 x 0.30	8 x 0.90	0.6	5.5 to 20	OC, OT, OL, VS, UV/OV	16-bit SPI	TLE94xyz family concept		TDSO-24
TLE94110ES	10 x half-bridge	10 x 0.30	10 x 0.90	0.6	5.5 to 20	OC, OT, OL, VS, UV/OV	16-bit SPI	TLE94xyz family concept + backwards compatible to TLE84110		TDSO-24
TLE94112ES	12 x half-bridge	12 x 0.30	12 x 0.90	0.6	5.5 to 20	OC, OT, OL, VS, UV/OV	16-bit SPI	TLE94xyz family concept + 12 outputs in one package		TDSO-24
TLE4207G	2 x half-bridge	2 x 0.80	2 x 1.50	20	8 to 18	OC, OT, VS, UV/OV	Status flag	Error detection		DSO-14

For more details on the product, click on the part number or contact our product support.

DC Motor Control HAT with TLE94112ES

Complies with Raspberry Pi HAT specification

The Infineon Motor Control HAT with TLE94112ES complies with Raspberry Pi HAT specification and provides you with unique evaluation experience. It is equipped with 12-fold half-bridge driver TLE94112ES and comes with a ready-to-use software library. The HAT is also equipped with an Infineon TLS4125D0EP V50, a synchronous step-down converter which can power the Raspberry Pi.

Features and benefits

Key features
› Twelve half bridge power outputs, 0.9A each (combinable to up to 3.6A)
› Wide input voltage range of 5.5V to 20V
› Powering of Raspberry Pi by TLS4125D0EP V50
› Reverse polarity protection
› Driver is protected against over-temperature, over-current, over-voltage, under-voltage and enables diagnosis of over-current, over-voltage, under-voltage
› SPI interface with zero clock diagnosis
› Enhanced EMC performance
› Integrated PWM generator with 3 different frequencies (80Hz, 100Hz, 200Hz)

Benefits
› Compact design for multi-motor applications
› Quick and easy setup for evaluation and demo applications
› Wide range of applications

Target applications

- Automotive motor control: HVAC flap control
- Multi-motor applications
- DC motors and voltage controlled bipolar stepper motors
- Toys

Ordering code: TLE94112ESRPIHATTOBO1

For more details on the product, click on the part number or contact our product support.

Integrated full-bridge driver

General purpose 6 A H-bridges

IFX9201SG is a general purpose 6 A H-bridges for industrial applications, home appliance and building automation, power tools battery management and medical applications, designed to control small DC motors and inductive loads. The outputs can be pulse width modulated at frequencies up to 20 kHz, which enables operation above the human sonic range by means of PWM/DIR control. While the signal at the DIR input defines the direction of the DC motor, the PWM signal controls the duty cycle. For load currents above the current limitation threshold (8 A typically), the H-bridges switch into chopper current limitation mode.

Applications examples

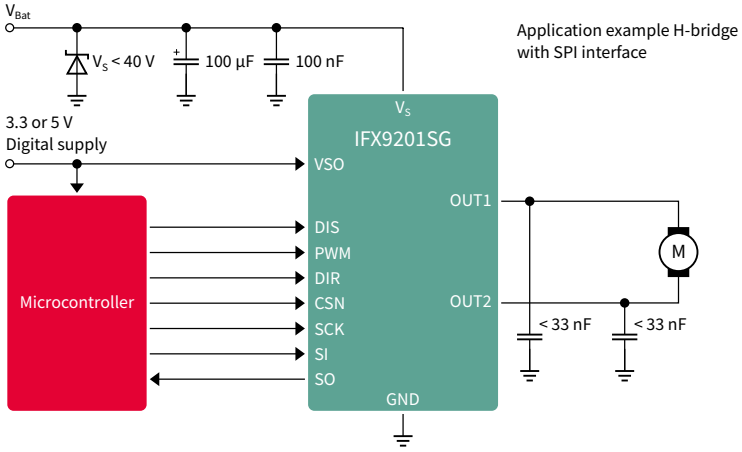

Features

Key features
› Up to nominal 36 V supply voltage
› Short circuit, overtemperature protection and undervoltage shutdown
› Detailed SPI diagnosis or simple error flag
› Simple design with few external components
› Small and robust DSO-12-17 (IFX9201SG) and DSO-36-72 (IFX9202ED) packages

Product number	Operating voltage	Current limit (min.) [A]	Quiescent current (typ.) [µA]	Operating range [V]	$R_{DS(on)}$ (typ./switch) [mΩ]	Package	R_{thJC} (max.) [K/W]
IFX9201SG	4.5 to 36 V	6.0	19.0	5 to 36	100	PG-DSO-12 (power)	2.0

For more details on the product, click on the part number or contact our product support.

H-BRIDGE KIT 2GO with IFX9201SG

Build your own DC motor control with the H-bridge Kit 2GO, a ready-to-use evaluation kit. It is fully populated with all electronic components equipped with the H-bridge IFX9201 combined with XMC1100 microcontroller based on Arm® Cortex®-M0 CPU. It is designed for the control of DC motors or other inductive loads up to 6 A or up to 36 V of supply.

Target applications

- DC motor control for industrial applications
- Home and building automation
- Power tools battery management
- Industrial robotic applications
- Electric toys applications

Ordering code: HBRIDGEKIT2GOTOBO1

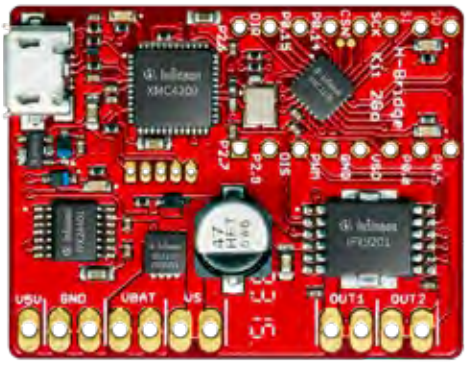

KIT_XMC1300_IFX9201
Stepper Motor Control Shield with IFX9201SG and XMC1300 for Arduino

The Stepper Motor Control Shield from Infineon is one of the first high current stepper motor control boards being compatible to Arduino as well as to Infineon's XMC1100 boot kit. The Stepper Motor Control Shield is capable to drive the two coils in a stepper motors featuring dual-half bridge configuration. The implemented integrated IFX9201 half-bridges can be controlled by a STEP-signal via the STEP pin. Interfacing to a microcontroller is made easy by the integrated XMC1300 microcontroller that holds the peripherals to allow high-speed current control. Microstepping of the stepper motor can be achieved using the internal comparators, while operational amplifiers are installed to adapt the motor current sense signal to the microcontroller's input levels.

Features and benefits

Key features	Key benefits
Compatible with microcontroller boards using the Arduino form factor, e.g. Infineon's XMC™ microcontroller kits	Fast and inexpensive prototyping of stepper motor control
Capable of high frequency PWM, e.g. 30 kHz	Simple testing of microstepping algorithms
Adjustable slew rates for optimized EMI by changing external resistor	Diagnose pin to allow hardware feedback during development
Driver circuit with logic level inputs	Overtemperature shutdown with latch behavior and undervoltage shutdown of the power section
Diagnosis with current sense	

Target applications

- Stepper motors up to 5 A phase current
- 24 V nominal input voltage for the power stage
- Average motor current 3 A without additional cooling effort, 5 A possible with proper cooling

Ordering code:
KITXMC1300IFX9201TOBO1

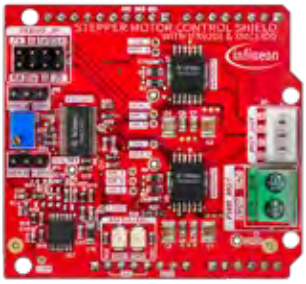

For more details on the product, click on the part number or contact our product support.

Motor System ICs

(BL)DC Motor System IC combines power supply, communication and multiple half-bridge MOSFET drivers

Infineon's Motor System IC family offers high integration and high performance with optimized system cost for DC and BLDC motor control applications. All devices of the Motor System IC family feature a low-dropout voltage regulator with an output current of 250 mA/5 V. The communication interface incorporates a CAN FD transceiver up to 5 Mbit/s according to ISO 11898-2:2016 (including Partial Networking (PN) option) and/or a LIN transceiver.

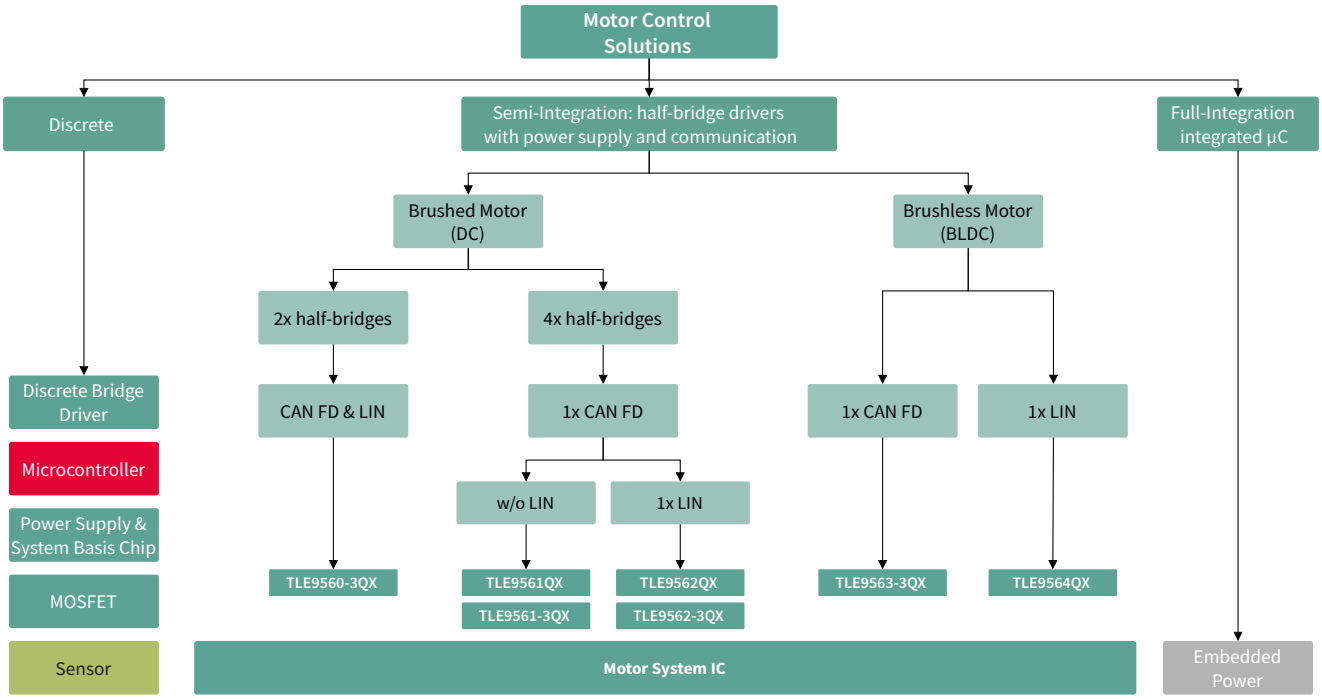

Features

Features
› 5 V linear regulator up to 250 mA
› CAN FD up to 5 Mbps › CAN PN and FD tolerant ("-3" variants)
› LIN2.2B/J2602
› TLE9560/1/2: up to 4 half-bridge gate drivers with adaptive MOSFET control up to 100 mA constant gate charge
› TLE9563/4: 3-phase gate driver with CSA and adaptive MOSFET control up to 150 mA constant gate charge
› Up to 4 high-side switches (with 7 on-resistance) › Up to 5 wake inputs
› Up to 6 PWM inputs

Benefits
› PCB savings up to 50 percent due to unique integration approach
› Lower switching losses and EMC optimization due to adaptive MOSFET control
› Automatic regulation of MOSFET pre-charge currents diminish need for production MOSFET calibration
› VS monitoring in sleep mode activates MOSFET to prevent from ECU damage when motor is in generator mode

For more details on the product, click on the part number or contact our product support.

Application diagram TLE9560/1/2 for DC motor control

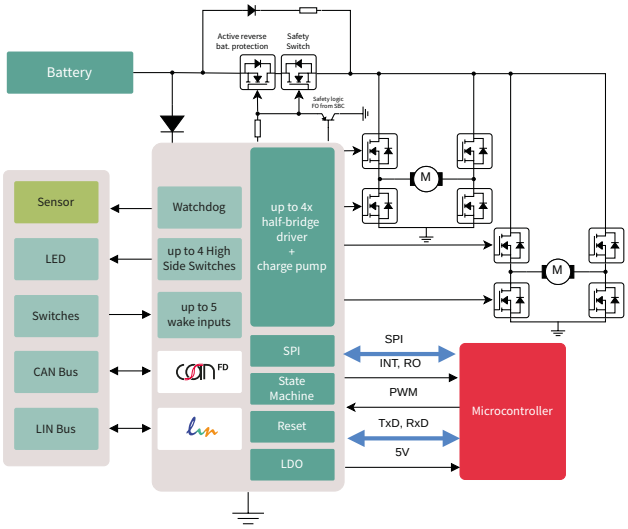

Application diagram TLE9563/4 for BLDC motor control

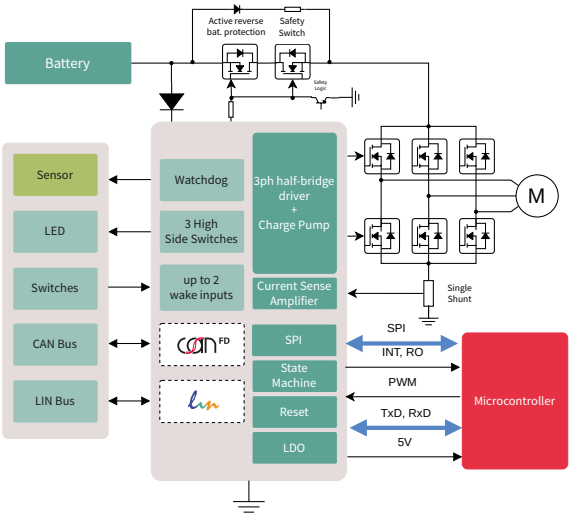

Product table

Product variant	VCC1	CAN FD	CAN PN	LIN	HS switches	PWM input	Driver
TLE9560-3QX	5 V up to 250 mA	✓	✓	✓	4	1	2x half-bridges (100 mA const.)
TLE9561QX	5 V up to 250 mA	✓	–	–	4	4	4x half bridges (100 mA const.)
TLE9561-3QX	5 V up to 250 mA	✓	✓	–	4	4	4x half bridges (100 mA const.)
TLE9562QX	5 V up to 250 mA	✓	–	✓	4	2	4x half bridges (100 mA const.)
TLE9562-3QX	5 V up to 250 mA	✓	✓	✓	4	2	4x half bridges (100 mA const.)
TLE9563-3QX	5 V up to 250 mA	✓	✓	–	3	6	3x half bridges (150 mA const.)
TLE9564QX	5 V up to 250 mA	–	–	✓	3	6	3x half bridges (150 mA const.)

For more details on the product, click on the part number or contact our product support.

DC and BLDC Motor Control Shields and Evaluation Boards with TLE9562-3QX and with TLE9563-3QX

The purpose of these boards is to provide a quick evaluation solution for lab assessments. The evaluation boards offer a unique two in one solution: They can be connected via a UIO stick with the computer to evaluate features via ConfigWizard (a graphical user interface) which can be found in the Infineon Toolbox. In addition, the evaluation boards feature an Arduino Shield interface for rapid prototyping.

Summary of features BLDC Motor Control Shield with TLE9563-3QX

- Operating voltage range 5.5-28 V with 5 V compatible logic input
- Integrated reverse polarity protection with onboard EMC filter
- Three integrated half-bridges MOSFET (2 in 1 MOSFET package)
- 5 mΩ low-side current sense
- High-Power RGB led driven by integrated High-Side switches
- Onboard Back-EMF detection circuit and connector for HALL-sensor
- Arduino example codes available

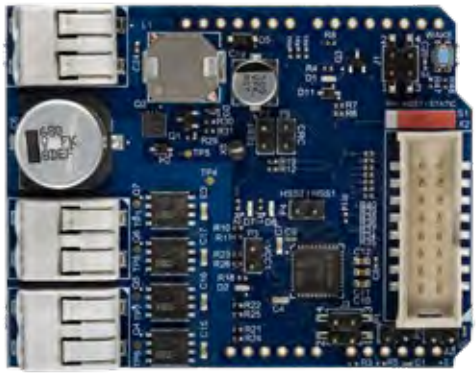

Sales Product Name: BLDC SHIELD_TLE956X
Ordering Code: BLDCSHIELDTLE956XTOBO1

Summary of features DC Motor Control Shield with TLE9562-3QX

- Operating voltage range 5.5-28V with 5V compatible logic input
- Integrated reverse polarity protection with onboard EMC filter
- Four integrated half-bridge MOSFETs (2 in 1 MOSFET package)
- Easy interfacing of CAN and LIN transceiver
- Miniaturization / Shrink of the PCB Area
- Arduino example codes available

Sales Product Name: DC SHIELD_TLE956X
Ordering Code: DCSHIELDTLE956XTOBO1

Benefits of DC and BLDC Motor Control Shields

- 2 in 1 board with GUI & Arduino interface for evaluation and rapid prototyping
- 50% reduced internal operating current consumption
- Simplified & cost efficient ground network
- Smaller package size for area savings
- Very low quiescent current in sleep-mode

For more details on the product, click on the part number or contact our product support.

Multi MOSFET Driver

Multiple half-bridge drivers designed to control up to eight half-bridges

Infineon's TLE9210x is a family of Multi MOSFET Driver ICs, designed to control up to eight half-bridges (up to 16 n-channel MOSFETs) with one packaged device. Having only one device for several half-bridges enables further savings, such as less pick & place costs as well as less required PCB area compared to discrete solutions. TLE92108 and TLE92104 multiple MOSFET driver offer a reliable and cost optimized solution with state of the art diagnostic and protection. The devices of the TLE9210x family are pin and software compatible. Further, the product family allows motor cascading: with TLE92108 (8 half-bridges), up to 7 motors can be driven.

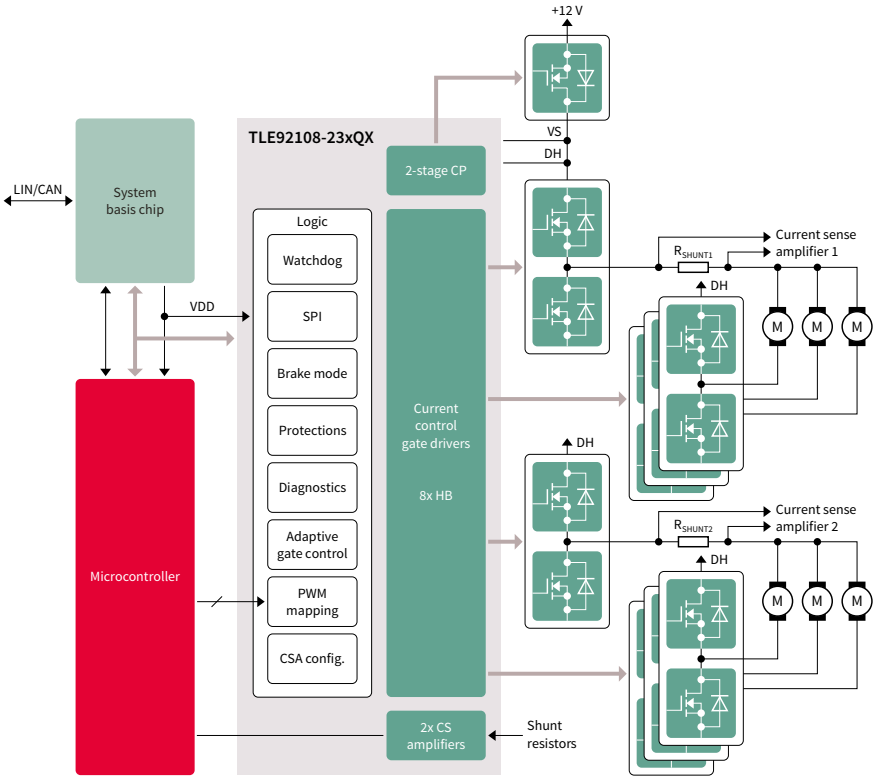

Product table

Type	Description	Brake mode	Package	Ordering Code
TLE92108-231QX	8-fold Multi-MOSFET driver IC	No	PG-VQFN-48	TLE92108231QXXUMA1
TLE92108-232QX	8-fold Multi-MOSFET driver IC	Yes	PG-VQFN-48	TLE92108232QXXUMA1
TLE92104-131QX	4-fold Multi-MOSFET driver IC	No	PG-VQFN-48	TLE92104131QXXUMA1
TLE92104-232QX	4-fold Multi-MOSFET driver IC	Yes	PG-VQFN-48	TLE92104232QXXUMA1

For more details on the product, click on the part number or contact our product support.

TLE92104-23QX APPKIT & TLE92108-23QX APPKIT

Infineon's evaluation boards to measure and evaluate the hardware and software functionalities of the Multi MOSFET driver family

The TLE92104-23QX APPKIT contains the Multi MOSFET driver IC TLE92104-232QX,and a typical application circuit, including 4 MOSFET half-bridges (OptiMOS™ 40V MOSFETs in S3O8 package) to drive up to 4 DC motors.

The TLE92108-23QX APPKIT contains the Multi MOSFET driver IC the TLE92108-232QX and a typical application circuit, including 8 MOSFET half-bridges (OptiMOS™ 40V in S3O8 package) to drive up to 8 DC motors.

The application boards can be connected via a UIO stick with the computer to evaluate its features via ConfigWizard (a graphical user interface) which can be found in the Infineon Toolbox.

Ordering code: TLE9210423QXAPPKITTOBO1
Ordering code: TLE9210823QXAPPKITTOBO1

For more details on the product, click on the part number or contact our product support.

Infineon support for power ICs

Useful links and helpful information

Further information, datasheets and documents

infineon.com/acdc
infineon.com/coolset
infineon.com/integrated-powerstages
infineon.com/digital-controller
infineon.com/lighting-ics
infineon.com/isoface
infineon.com/eicedriver
infineon.com/novalithic
infineon.com/shields-for-arduino

infineon.com/ipol
infineon.com/analog-ipol
infineon.com/xdp
infineon.com/ipm
infineon.com/madk
infineon.com/optireg-linear
ifineon.com/optireg-switcher
infineon.com/motor-control-ics

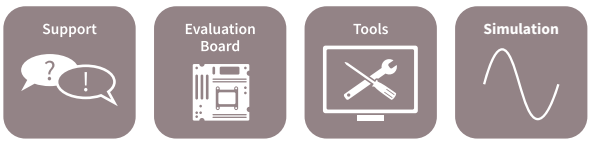

Intelligent power switches and modules

- ISOFACE™ isolated industrial interface
- Industrial PROFET™
- HITFET™
- ISOFACE™, Industrial PROFET™ and HITFET™ product portfolio

ISOFACE™ isolated industrial interface

Output switches and digital input ICs offering unmatched system uptime, reliability and shortened product launch time by 50%

The ISOFACE™ product family provides robust and intelligent galvanic isolation for industrial control applications such as programmable logic controllers, sensor input modules, control panels and general control equipment. The output switches are compact in design, enabling robust and reliable operation at low system cost. Ideal for high-speed applications, digital input ICs are equally robust, reliable and compact – also offering superior EMI robustness and setting a new standard in diagnostics.

ISOFACE™ galvanic-isolated 8-channel output switches

The ISO1H81xG product family integrates:

- Robust galvanic isolation (UL508 and C22.2 NO14 certified) to protect the 3.3 V/5 V control domain of an industrial control system from the harsh 24 V process side
- 8-channel high-side power-switching capabilities of up to 1.2 A per channel
- Active current limitation and over-temperature protection
- Common diagnostic feedback for overtemperature and for V_{bb} undervoltage

Isolated output switch block diagram

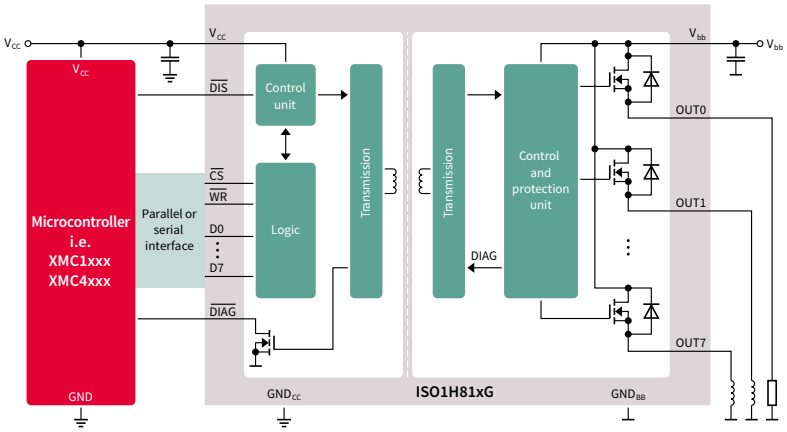

Isolated output switches

Features and benefits

Key features	Key benefits
Integrated galvanic isolation (500 V_{AC})	Robust and reliable
Eight channels (0.6 or 1.2 A, each)	Compact system solution
Inductive load switching	Lower system cost
Diagnostic feedback (overtemperature, overload)	System status feedback
Serial and parallel MCU interface	Directly interfacing with all MPUs and MCUs

ISOFACE™ galvanic-isolated 8-channel high-side switch with 10-fold diagnostics

The ISO2H823V establishes a new standard in diagnostics for industrial control applications. For example, in industrial plants with capital-intensive single-tool equipment at work or with time-critical chemical processes running, obtaining in real-time differentiated feedback from the factory floor enables both, preventive maintenance and drastic reduction of the time to fix a problem. This is why the ISO2H823V is a highly desirable system solution. System designers benefit from the ISO2H823V through short time to market, reduced PCB area and uncompromised product reliability.

The ISO2H823V integrates:

- Robust 2.5 kV AC galvanic isolation:
  - UL508 and CSA C22.2 No.14 certified
  - Protecting the 3.3 V control domain of an industrial control system from the harsh 24 V process side
  - Exceeding the IEC 61131-2 requirements for reinforced isolation
- 8-channel high-side power-switching capabilities of up to 0.6 A per channel with active current limitation and overtemperature protection
- 10-fold diagnostic feedback
  - 5 types of feedback which are available individually for each of the eight outputs
  - 5 types of IC-level feedback
- Common diagnostic feedback for overtemperature and for V_{bb} undervoltage

Typical application

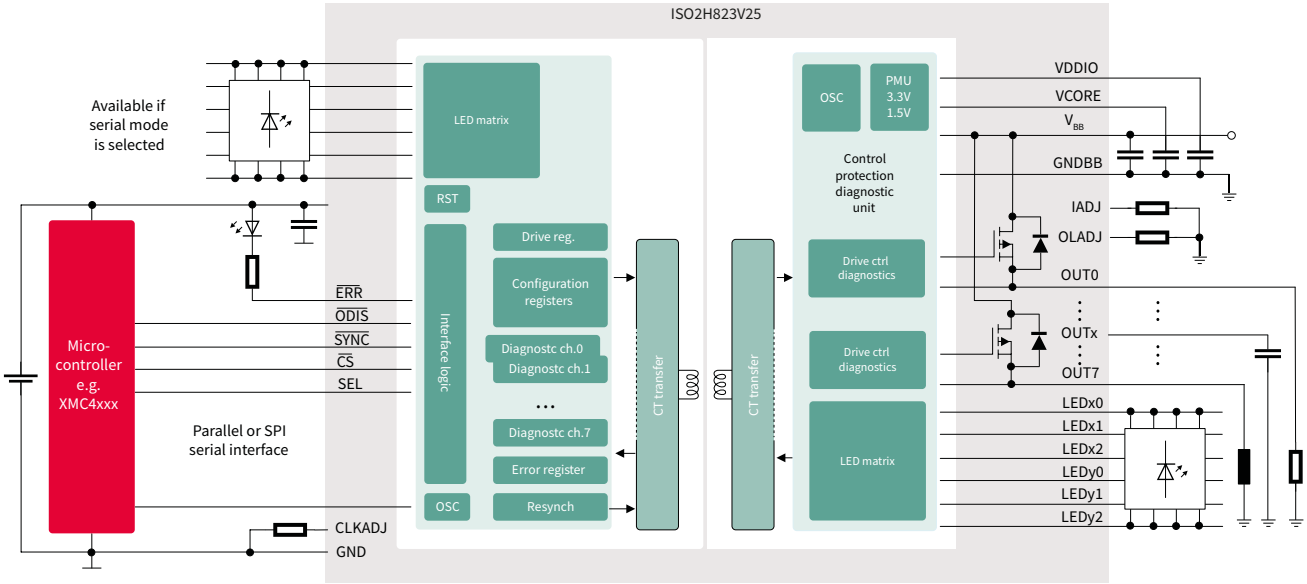

Features and benefits

Key features	Key benefits
Robust 2.5 kV AC galvanic isolation	Reliable and UL certified
Eight channels (up to 0.6 A per channel)	Small form factor solution
10-fold diagnostic feedback (over-temperature, overload)	Preventive Maintenance and short down-times

ISOFACE™ galvanic-isolated digital input ICs

The UL1577 certified ISO1I81xT digital input IC family is an intelligent system solution offering robust galvanic isolation between the microcontroller on the “control side” and the 24 V factory floor environment, frequently referred to as the “process side”.

Digital input switch block diagram

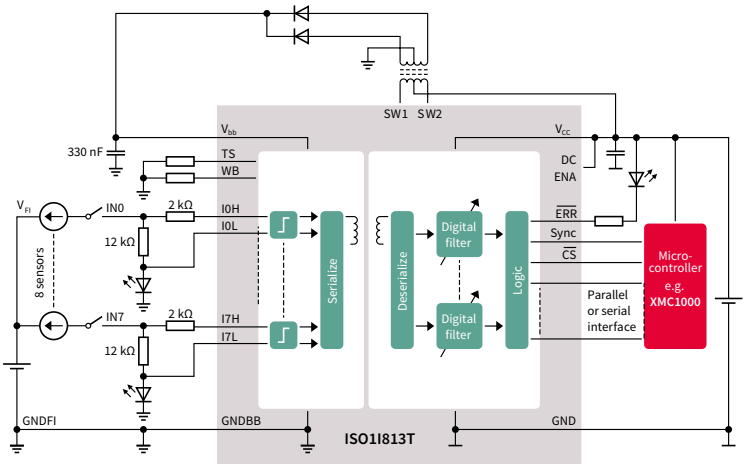

Galvanic-isolated digital input ICs

Features and benefits

Key features	Key benefits
› Integrated galvanic isolation (500 VAC)	› Robust and reliable
› Eight channels (IEC type 1/2/3)	› Compact system solution
› Up to 500 kHz sampling speed	› High-speed applications
› Programmable input filters	› Superior EMI robustness
› Channel-specific diagnostics (wire-break, undervoltage)	› System status feedback
	› Valuable maintenance support

Industrial PROFET™

Protected high-side switches

Infineon's market-proven high-side switch Industrial PROFET™ products have been designed to target various industrial applications that drive all types of resistive, inductive and capacitive loads. Due to their outstanding energy robustness, they are perfectly suitable for switching challenging inductive loads and driving relays. Their main application areas include high-voltage and (V_{supply} up to 60 V) and PWM applications up to 1 kHz. Industrial PROFET™ can be applied to drive any kind of sensor units, indicators, displays, LEDs, relays, valves and magnetic actuators or replace electromechanical relays, fuses and discrete circuitry. Industrial PROFET™ products are also perfect for applications with long wiring or any other kind of inductive loads or applications with space constraints. Failsafe systems do make use of them as well.

PROFET™ typical block diagram

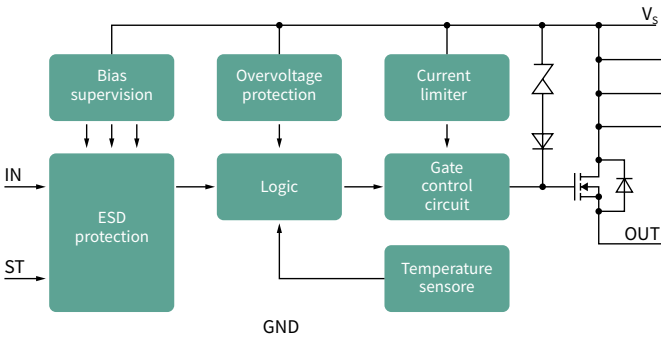

Key applications

- Industrial automation
- Programmable logic controller (PLC)
- Digital DCS and PC I/O modules
- Robotics
- Building and home automation
- Solar applications
- Wind energy systems
- Failsafe systems
- Smart grid
- Motor control and drives
- Power supplies

Features and benefits

Key features	Key benefits
Right fit for digital output switches, motor or robot control, protected switching of decentralized loads like sensors or auxiliary supply	Small system form factor
Outstanding robustness and reliability as required by industrial mission profiles	No/little downtime of system in operation
Thermally optimized products with low $R_{DS(on)}$ to deal with the high ambient temperatures and limited or even no cooling	Low heating up of a system
Diagnosis and protection for safe system operation	System cost saving by built-in protection and tailored featureset
Small and compact design for higher integration and applications with space constraints	Reduced system maintenance efforts by providing optimized diagnostics

PLC – programmable logic controller digital output modules

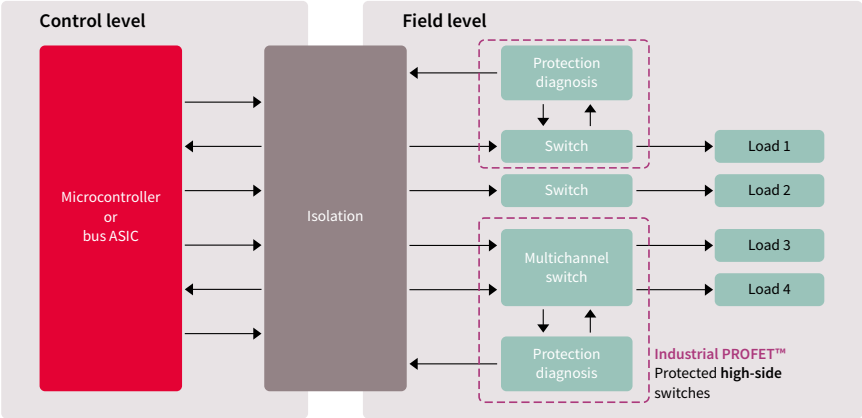

PROFET™ as actuators typically address I/O modules supplying nominal currents of 2 A or 0.5 A. However, PROFET™ portfolio also provides devices for lower and higher currents. PROFET™ parts are suitable for switching resistive, capacitive and, by featuring high EAS, inductive loads.

Corresponding PROFET™ evaluation boards are available on request.

HITFET™

Protected low-side switches

HITFET™ stands for highly-integrated temperature-protected MOSFET. These well-established low-side switches offer a compelling feature set with protection against overtemperature, short circuit and overload conditions as well as ESD robustness. The HITFET™ + family is the new generation based on new technology, enabling a significant shrink compared to the existing Classic HITFET™ portfolio (up to 50 percent shrink). This novel generation consists of standard and fully-featured protected low-side switches (11 to 125 mΩ) in the TO-252-3 DPAK/TO-252-5 DPAK and TDSO-8 packages. Classic HITFET™ and HITFET™ + devices address a wide range of applications, including resistive, inductive and capacitive loads.

Application diagramm example for HITFET™ +

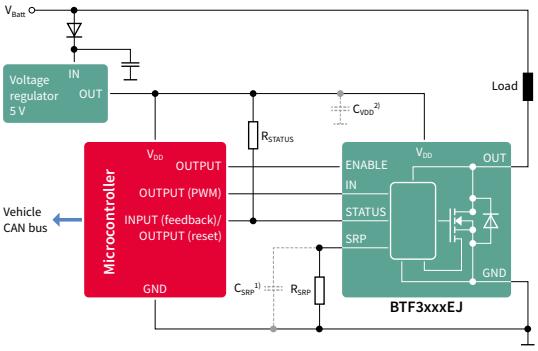

1) C_{SRP}-GND < 100 pF – maximum permittet parasitic capacitance at the SRP-pin
2) Filter capacitor on supply, recommended 100 nF

Key applications

- Industrial automation *
- Programmable logic controller (PLC) * *
- Digital I/O modules
- Building and home management
- All kind of solenoid or valve driving
- Power modules
- Solar power inverters

Features and benefits

Key features	Key benefits
› Low-side switches with integrated protection features	› High design flexibility with scalable $R_{DS(on)}$ and package
› Scalable in $R_{DS(on)}$ ranges from 800 mΩ down to 11 mΩ	› Driving applications with high switching speed requirements up to 25 kHz (e.g. valve, solenoid)
› Adjustable slew rate control (BTFxxx)	› Easy to design-in
› Thermal shutdown with auto restart or latch behavior	› Choice of packages to match individual application needs
Status feedback via › Increased input current (HITFET™ 2nd gen.) › Digital readout via SRP (BTF3050TE) › Via status pin (BTF3xxxEJ)	

Low-side switch shield with BTF3050TE for Arduino

Featured products: Three BTF3050TE low-side switches of the HITFET™ + family
Combatible with: Microcontroller boards using the Arduino form factor and the corresponding Infineon's kits with Arm® powered XMC™ microcontroller
Orderable part number: SHIELDBTF3050TETOBO1

BTT3018EJ DEMOBOARD

Featured products: One single-channel low-side switch of BTT3018EJ
Combatible with: Can be used as single stand and is also pin-compatible with microcontroller boards using the Arduino form factor (e.g. XMC1100 Boot Kit, Arduino Uno)
Orderable part number: BTT3018EJDEMOBOARDTOBO1

*See block diagram on page 278
* * See block diagram on page 279

For more details on the product, click on the part number or contact our product support.

ISOFACE™ product portfolio

ISOFACE™ output switches

Product overview		ISO1H801G	ISO1H811G	ISO1H812G	ISO1H815G	ISO1H816G	ISO2H823V
Switch	V_{bb} operational range: 11 V to 35 V	✓	✓	✓	✓	✓	✓
	Max. continuous load current per channel	0.6 A	0.6 A	0.6 A	1.2 A	1.2 A	0.6 A
	Load current increase by using outputs in parallel	✓	✓	✓	✓	✓	✓
	Inductive clamping energy per channel: 1 Joule	✓	✓	✓	✓	✓	150 mJ
Microcontroller interface	Type	Parallel	Parallel	Serial	Parallel	Serial	Serial/ Parallel
	Nominal voltages	5 V	3.3 V/5 V	3.3 V/5 V	3.3 V/5 V	3.3 V/5 V	3.3 V
Safety features	Isolation voltage: V_{ISO} = 500 VAC UL508 and EN 61131-2 certified	✓	✓	✓	✓	✓	2.5 kV AC
	Active current limitation	✓	✓	✓	✓	✓	✓
	Thermal shutdown	✓	✓	✓	✓	✓	✓
	Common output disable pin	✓	✓	✓	✓	✓	✓
Diagnostics feedback	Overtemperature		✓	✓	✓	✓	✓
	V_{bb} undervoltage		✓	✓	✓	✓	✓
Package DSO-36 (16x14 mm)		✓	✓	✓	✓	✓	VQFN-70
Ordering code		ISO1H801GAUMA1	ISO1H811GAUMA1	ISO1H812GAUMA1	ISO1H815GAUMA1	ISO1H816GAUMA1	ISO2H823V25XUMA1

ISOFACE™ digital input IC

Product overview		ISO1I811T	ISO1I813T
Input characteristics	IEC type: I, II, III	✓	✓
	Input status LED	✓	✓
	Max. sampling frequency	125 kHz	500 kHz
	Deglitching filter setting	Hard wired	Software, individual per channel
	Synchronous data acquisition	–	✓
µC interface	3.3 V/5 V	✓	✓
	Serial and parallel	✓	✓
Safety features	500 VAC isolation voltage	✓	✓
Diagnostic feedback	Wire break, channel-specific	–	✓
	V_{bb} undervoltage	✓	✓
Support for external V_{bb} supply		–	✓
Package TSSOP-48 (8x12.5 mm)		✓	✓
Ordering code		ISO1I811TXUMA1	ISO1I813TXUMA1

For more details on the product, click on the part number or contact our product support.

Industrial PROFET™ product portfolio

Load current Typical, per channel	1-channel	2-channel	4-channel	8-channel
7 A	ITS428L2 ● 7 A, 60 mΩ, TO-252-5			
3 A	ITS4060S-SJ-N, ISP772T 3.1 A, 60 mΩ DSO-8			
2 A … 3 A	ITS4100S-SJ-N, ISP762T 2.4 A, 100 mΩ, DSO-8			
1 A … 2 A	ITS4200S-ME-P, ITS4142N 1.4 A, 200 mΩ, SOT223	ITS4040D-EP-D ● 2.6 A, 40 mΩ, TSDSO14	ITS4075Q-EP-D ● 2.6 A, 75 mΩ, TSDSO14	
	ISP752T 1.3 A, 200 mΩ, DSO-8	ITS5215L ● 2 A, 90 mΩ, DSO-12	ITS724G ● 2 A, 90 mΩ, DSO-20	
	ITS4200S-SJ-D, ISP752R ● 1.2 A, 200 mΩ, DSO-8		ITS716G ● 1 A, 140 mΩ, DSO-20	
			ITS711L1 ● 1 A, 200 mΩ, DSO-20	
0.5 A … 1 A	ITS4200S-ME-N, ISP452 0.7 A, 200 mΩ, SOT223		ITS4090Q-EP-D ● 0.7 A, 90 mΩ, TSDSO14	ITS42008-SB-D, ITS4880R ● 0.6 A, 200 mΩ, DSO-36
	ITS4200S-ME-O, ITS4141N 0.7 A, 200 mΩ, SOT223		ITS4130Q-EP-D ● 0.65 A, 130 mΩ, TSDSO14	
< 0.5 A	ITS4300S-SJ-D, ISP742RI ● 0.4 A, 300 mΩ, DSO-8	ITS42K5D-LD-F ● 0.25 A, 2.5Ω, TSON-10		
	ITS41k0S-ME-N, ITS4140N 0.2 A, 1Ω, SOT223			

● = With diagnosis

Product	Number of channels	$R_{DS(on)}$ (typ) [mΩ]	Nominal load current [A]	E_{AS} [mJ]	Recommended operating voltage range [V]	$I_{L(SC)}$ (typ) [A]	Diagnosis	Package
ITS4060S-SJ-N	1	50	3.10	900 @ 1.50 A	5.00 … 34.00	17.0	n/a	DSO-8
ISP772T	1	50	2.60	900 @ 1.50 A	5.00 … 34.00	17.0	n/a	DSO-8
ITS428L2	1	60	7.00	190 @ 7.00 A	4.75 … 41.00	22.0	Digital	TO252-5
ITS4100S-SJ-N	1	70	2.40	870 @ 1.00 A	5.00 … 34.00	10.0	n/a	PG-DSO-8
ISP762T	1	70	2.00	870 @ 1.00 A	5.00 … 34.00	10.0	n/a	DSO-8
ITS4200S-ME-O	1	150	1.10	700 @ 0.50 A	11.00 … 45.00	1.4	n/a	SOT-223-4
ITS4141N	1	150	1.10	700 @ 0.50 A	12.00 … 45.00	1.4	n/a	SOT-223-4
ITS4200S-ME-P	1	150	2.20	160 @ 1.00 A	11.00 … 45.00	3.0	n/a	SOT-223-4
ITS4142N	1	150	2.20	160 @ 1.00 A	12.00 … 45.00	3.0	n/a	SOT-223-4
ITS4200S-ME-N	1	160	1.20	500 @ 0.50 A	5.00 … 34.00	1.5	n/a	DSO-8
ISP452	1	160	1.20	500 @ 0.50 A	5.00 … 34.00	1.5	n/a	SOT-223-4
ITS4200S-SJ-D	1	150	1.70	125 @ 1.00 A	6.00 … 52.00	6.5	Digital	DSO-8
ISP752R	1	200	1.70	125 @ 1.00 A	6.00 … 52.00	6.5	Digital	DSO-8
ISP752T	1	200	1.70	125 @ 1.00 A	6.00 … 52.00	6.5	n/a	DSO-8
ITS4300S-SJ-D	1	250	0.80	800 @ 0.30 A	5.00 … 34.00	1.2	Digital	DSO-8
ISP742RI	1	350	0.80	800 @ 0.30 A	5.00 … 34.00	1.2	Digital, inverted	DSO-8
ITS41K0S-ME-N	1	1000	0.55	1000 @ 0.15 A	4.90 … 60.00	0.9	n/a	SOT-223-4
ITS4140N	1	1000	0.55	1000 @ 0.15 A	4.90 … 60.00	0.9	n/a	SOT-223-4
ITS4040D-EP-D	2	40	2 x 2.00	185 *	5.00 … 45.00	4.1	Digital	TSDSO-14
ITS5215L	2	90	2 x 2.00	178 @ 3.50 A	5.50 … 40.00	15.0	Digital	DSO-12
ITS42K5D-LD-F	2	2500	2 x 0.25	Freewheeling	4.50 … 45.00	0.6	Digital	TSON-10
ITS4075Q-EP-D	4	75	4 x 2.00	60 *	5.00 … 45.00	4.1	Digital	TSDSO-14
ITS4090Q-EP-D	4	90	4 x 0.50	410 *	5.00 … 45.00	1.5	Digital	TSDSO-14
ITS724G	4	90	4 x 2.00	120 @ 3.30 A	5.50 … 40.00	15.0	Digital	DSO-20
ITS4130Q-EP-D	4	130	4 x 0.50	380 *	5.00 … 45.00	1.25	Digital	TSDSO-14
ITS716G	4	140	4 x 1.00	76 @ 2.30 A	5.50 … 40.00	9.0	Digital	DSO-20
ITS711L1	4	200	4 x 1.00	150 @ 1.90 A	5.00 … 35.00	7.5	Digital	DSO-20
ITS42008-SB-D	8	200	8 x 0.60	10,000 @ 625 mA	11.00 … 45.00	3.0	Digital	DSO-36
ITS4880R	8	200	8 x 0.60	10,000 @ 625 mA	11.00 … 45.00	3.0	Digital	DSO-36

Evaluation board

- ITS4040
- ITS4075
- ITS4090
- ITS4130

* Per one channel

For more details on the product, click on the part number or contact our product support.

HITFET™ product portfolio

Product type	Product family	Channels	$R_{DS(on)}$ @ 25°C [mW]	Nominal load current [A]	EAS [mJ]	Operating voltage range [V]	$I_{L(lim)}$ (typ) [A]	$I_{L(lim)_TRIGGER}$ (typ) [A]	Diagnosis	Package
BTS3011TE	HITFET™ +	1	10.7	10	300 @ 5 A	up to 28	35	70	Status pin	TO-252-5 (DPAK 5-leg)
BTT3018EJ	HITFET™ +	1	16	7.0	150	up to 36	45	–	Status pin	TDSO-8
BTS3035EJ	HITFET™ +	1	28	5.00	105 @ 5 A	up to 31	20.00	–	Status pin	TDSO-8
BTS3035TF	HITFET™ +	1	30	5.00	106 @ 5 A	up to 31	20.00	–	–	TO-252-3 (DPAK 3-leg)
BTF3035EJ	HITFET™ +	1	28	5.00	95 @ 5 A	up to 32	14.00	41.00	Status pin	TDSO-8
BTF3050TE	HITFET™ +	1	40	3.00	120 @ 3 A	up to 28	8.00	30.00	Through SRP pin	TO-252-5 (DPAK 5-leg)
BTS3050EJ	HITFET™ +	1	40	4.00	62 @ 3 A	up to 31	15.00	–	Status pin	TDSO-8
BTS3050TF	HITFET™ +	1	44	4.00	64 @ 4 A	up to 31	15.00	–	–	TO-252-3 (DPAK 3-leg)
BTF3050EJ	HITFET™ +	1	40	4.00	62 @ 4 A	up to 32	10.00	29.00	Status pin	TDSO-8
BTS3060TF	HITFET™ +	1	50	3.00	55 @ 3 A	up to 35	10.50	–	–	TO-252-3 (DPAK 3-leg)
BTS3080EJ	HITFET™ +	1	64	3.00	35 @ 3 A	up to 31	10.00	–	Status pin	TDSO-8
BTS3080TF	HITFET™ +	1	69	3.00	38 @ 3 A	up to 31	10.00	–	–	TO-252-3 (DPAK 3-leg)
BTF3080EJ	HITFET™ +	1	64	3.00	33 @ 3 A	up to 32	7.00	18.00	Status pin	TDSO-8
BTS3125EJ	HITFET™ +	1	100	2.00	30 @ 2 A	up to 31	7.00	–	Status pin	TDSO-8
BTS3125TF	HITFET™ +	1	108	2.00	24 @ 2 A	up to 31	7.00	–	–	TO-252-3 (DPAK 3-leg)
BTF3125EJ	HITFET™ +	1	100	2.00	23 @ 2 A	up to 32	5.00	12.00	Status pin	TDSO-8
BTS3018TC	Classic HITFET™	1	14	6.00	1900	up to 36	30.00	–	Through input pin	TO-263-3-2 (TO-220-3 (SMD))
BTS141TC	Classic HITFET™	1	25	5.10	4000	up to 36	25.00	–	Through input pin	TO-263-3-2 (TO-220-3 (SMD))
BTS3028SDL	Classic HITFET™	1	28	5.00	350	up to 36	18.00	–	Through input pin	TO-252-3 (DPAK 3-leg)
BTS3028SDR	Classic HITFET™	1	28	5.00	350	up to 36	18.00	–	Through input pin	TO-252-3 (DPAK 3-leg)
BTS133TC	Classic HITFET™	1	40	3.80	2000	up to 36	21.00	–	Through input pin	TO-263-3-2 (TO-220-3 (SMD))
BTS3046SDL	Classic HITFET™	1	46	3.60	140	up to 36	10.00	–	Through input pin	TO-252-3 (DPAK 3-leg)
BTS3046SDR	Classic HITFET™	1	46	3.60	140	up to 36	10.00	–	Through input pin	TO-252-3 (DPAK 3-leg)
BTS117TC	Classic HITFET™	1	80	3.50	1000	up to 36	7.00	–	Through input pin	TO-263-3-2 (TO-220-3 (SMD))
BTS3104SDL	Classic HITFET™	1	104	2.00	50	up to 36	6.00	–	Through input pin	TO-252-3 (DPAK 3-leg)
BTS3104SDR	Classic HITFET™	1	104	2.00	50	up to 36	6.00	–	Through input pin	TO-252-3 (DPAK 3-leg)
BTS3408G	Classic HITFET™	2	480	0.55	800	up to 36	1.00	–	Through input pin	DSO-8
BSP75N	Classic HITFET™	1	490	0.70	550	up to 36	1.00	–	Through input pin	SOT-223

For more details on the product, click on the part number or contact our product support.

Infineon support for intelligent switches and input ICs

Useful links and helpful information

Further information, datasheets and documents

infineon.com/isoface
infineon.com/hitfet
infineon.com/industrial-profet
infineon.com/shields-for-arduino

Support | Evaluation Board | Tools

Gate-driver ICs

- Gate-driver ICs general overview
- EiceDRIVER™ 1EDN
- EiceDRIVER™ 1EDB
- EiceDRIVER™ 2EDN
- EiceDRIVER™ 2EDi
- EiceDRIVER™ 2EDL8 product family
- EiceDRIVER™ GaN
- 650 V level shift SOI and JI gate driver for IGBTs and MOSFETs
- 1200 V level shift SOI gate driver
- 200 V level shift SOI and JI gate drivers for MOSFET
- Non-isolated low-side gate-driver ICs
- EiceDRIVER™ 1ED Compact (1ED-AF/MF)
- EiceDRIVER™ X3 Compact (1ED31xx)
- EiceDRIVER™ 2L-SRC Compact (1ED32xx)
- EiceDRIVER™ Enhanced 1ED/2ED-F2 and 2ED-FI
- EiceDRIVER™ Enhanced X3 Analog (1ED34xx) and X3 Digital (1ED38xx)
- EiceDRIVER™ 1EDS-SRC
- Industrial and general-purpose gate driver ICs
- Gate-driver IC product portfolio
- Gate-driver ICs nomenclature
- Gate driver selection tool
- High-performance motor control

Gate-driver ICs

EiceDRIVER™ gate-driver ICs for MOSFETs, IGBTs, SiC MOSFETs and GaN HEMTs

Every switch needs a driver – the right driver makes a difference. Power electronics applications employ power device switches. And power device switches require optimum gate driver solutions. That is why we offer more than 500 EiceDRIVER™ gate-driver IC solutions suitable for any power switch, and for any application.

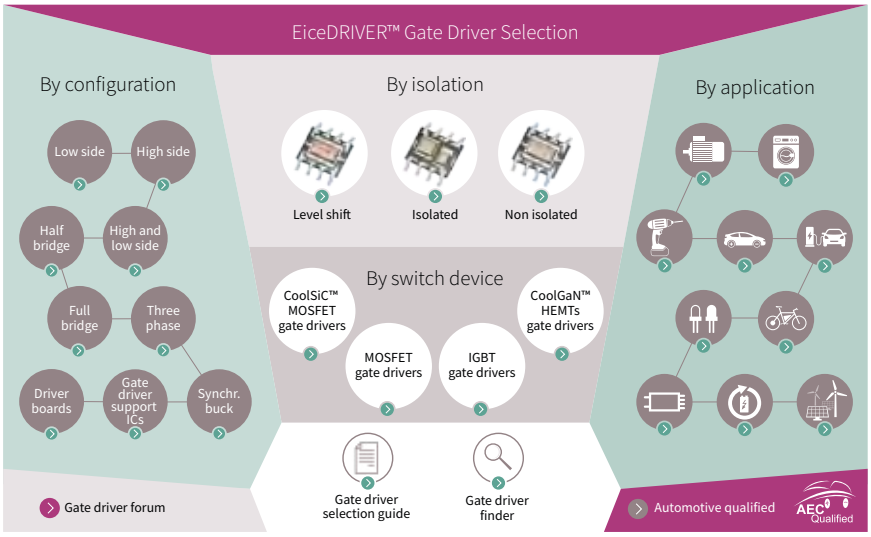

EiceDRIVER™ gate-driver ICs provide a wide range of typical output current options, from 0.1 A up to 14 A. Robust gate drive protection features such as fast short-circuit protection (DESAT), active Miller clamp, shoot-through protection, fault, shutdown, and overcurrent protection make them well-suited for both silicon and wide bandgap power devices, including CoolGaN™ and CoolSiC™.

Driver configuration			5 V	25 V	100 V	200 V	500 V	600 V	650 V	1200 V	2300 V
Drivers	1-Channel	High-side			Junction isolation (JI)	Junction isolation (JI)	Junction isolation (JI)	Junction isolation (JI)	Coreless transformer (CT)	Coreless transformer (CT)	Coreless transformer (CT)
		Low-side	Non-isolated (N-ISO)	Non-isolated (N-ISO)							
	2-Channel	High-side							Coreless transformer (CT)	Coreless transformer (CT)	
		Low-side		Non-isolated (N-ISO)							
		High-side and low-side				Junction isolation (JI)	Junction isolation (JI)	Junction isolation (JI), Silicon on insulator (SOI)	Silicon on insulator (SOI)	Junction isolation (JI)	
		Half-bridge			Junction isolation (JI)	Junction isolation (JI)		Junction isolation (JI), Silicon on insulator (SOI)	Silicon on insulator (SOI), Coreless transformer (CT)	Junction isolation (JI), Coreless transformer (CT)	
	4-Channel	H-bridge			Junction isolation (JI)						
	6-Channel	Three-phase bridge				Silicon on insulator (SOI)		Junction isolation (JI), Silicon on insulator (SOI)		Junction isolation (JI), Silicon on insulator (SOI)	
System building blocks		Current sense						Junction isolation (JI)			
		Start-up					Junction isolation (JI)				

Non-isolated (N-ISO) · Junction isolation (JI) · Silicon on insulator (SOI) · Coreless transformer (CT)

Right configuration for any power discrete and module

Our portfolio spans a variety of configurations, voltage classes, isolation levels, protection features, and package options. We offer excellent product families of galvanic isolated gate drivers, automotive qualified gate drivers, 200 V, 500-700 V, 1200 V level shift gate drivers, and non-isolated low-side drivers.

	Non isolated			Level-shift		Galvanically Isolated		
	Low side	TDI	Integrated over-current protection	Silicon on insulator (SOI)	Junction isolation (JI)	Functional Isolation	Basic isolation (UL1577)	Reinforced isolation (UL1577+VDE)
1-channel	1EDNx IRS44273	1EDN-TDI	1ED4417x		IRS10752 IRS25752 IRS211x IRS21271	1ED Compact (1ED-AF/1ED-MF) 1ED-F2 1EDF5673 (GaN)	1ED-B2 1ED31xxMU12x 1ED34xxMU12M 1ED38xxMU12M 1EDBx	1ED31xxMC12H 1ED32xxMC12H 1ED34xxMC12M 1ED38xxMC12M 1EDS5663H (GaN)
2-channel	2EDN 2ED24427 IRS442x			2EDL05x 2EDL23x 2ED210x 2ED2110 2ED218x 2ED2304	2EDL8- IRS200x IRS2011 IRS210x(4) IRS2110 IRS2153x IRS218x IRS230x IR2213 IR2214	2ED-F2 2ED-FI 2EDFx	2EDB-	2EDSx
4-channel					IRS2453x			
6-channel				6EDL04x 6ED2230	IR213x IRS2334 IR223x			

For more details on the product, click on the part number or contact our product support.

Advanced features for different applications
Our EiceDRIVER™ gate drivers provide advanced features including but not limited to integrated bootstrap diode (BSD), overcurrent protection, shutdown, fault reporting, enable, input filter, OPAMP, DESAT, programmable deadtime, shoot through protection, active miller clamp, active shutdown, separate sink and source outputs, short circuit clamping, soft shutdown, two level turn off and galvanic isolation (functional, basic and reinforced).

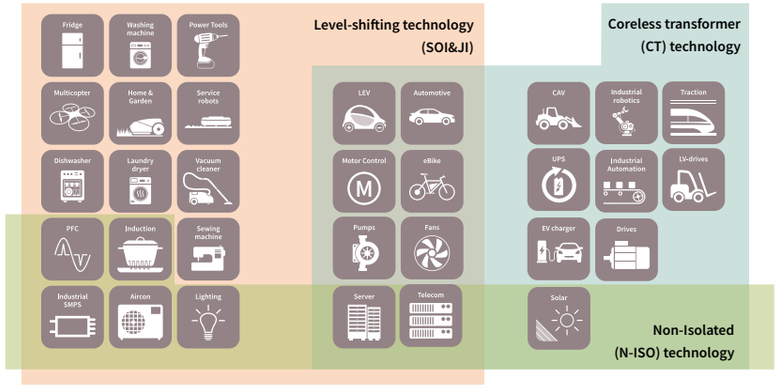

Single-channel low-side driver

Allows low offset of the voltage between input and output

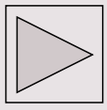

Single-channel high-side driver

Allows high voltage offset between input and output

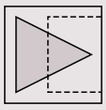

Dual-channel low-side driver

Both channels allow individual low voltage offsets, no interlock

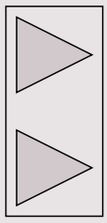

Dual-channel high-side driver

Both channels allow individual high voltage offsets, no interlock

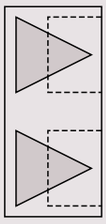

High and low-side driver

Two non-interlocked channels, one for high, one for low voltage offsets

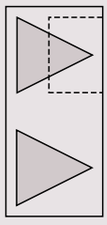

Half-bridge driver

Two interlocked channels where one of the channel allows a high voltage offset

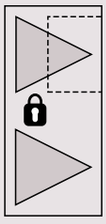

Full-bridge driver

Four channels in a package with two independent half bridges

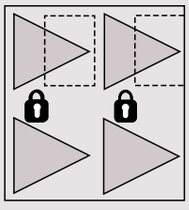

Three-phase bridge

Six channels in a package with three independent half bridges

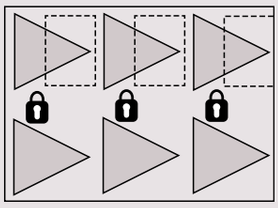

Current sense

Current sensing across a high-voltage offset between sense input and data output

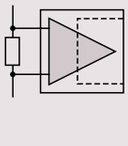

Synchronous-buck driver

High speed drivers for dual high-side and low-side MOSFETs in synchronous rectified buck converters

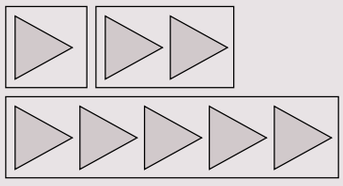

EiceDRIVER™ 1EDN

Rugged, cool and fast, single-channel low-side 4 A/8 A gate-driver ICs

Single-channel MOSFET gate-driver ICs are the crucial link between control ICs and powerful MOSFET switching devices. EiceDRIVER™ 1EDN family is fast, precise, strong and compatible. In SMPS designs, for fast MOSFET switching, high efficiency is enabled by 5 ns short slew rates and ±5 ns propagation delay precision. Separate source and sink outputs simplify the application design, while industry standard packages and pinout ease system design upgrades. EiceDRIVER™ 1EDN family brings about the new reference in ruggedness and low power dissipation. A -10 V robustness of control and enable inputs provide crucial safety margin when driving pulse transformers. 5 A reverse output current robustness eliminates the need for Schottky switching diodes when driving MOSFETs in TO-220 and TO-247 packages. True rail-to-rail low impedance output stages ensure the cool operation of driver ICs, while 4 V and 8 V UVLO (undervoltage lockout) options for instant MOSFET offer protection during start-up and under abnormal conditions.

Application overview: 800 W switched mode power supply

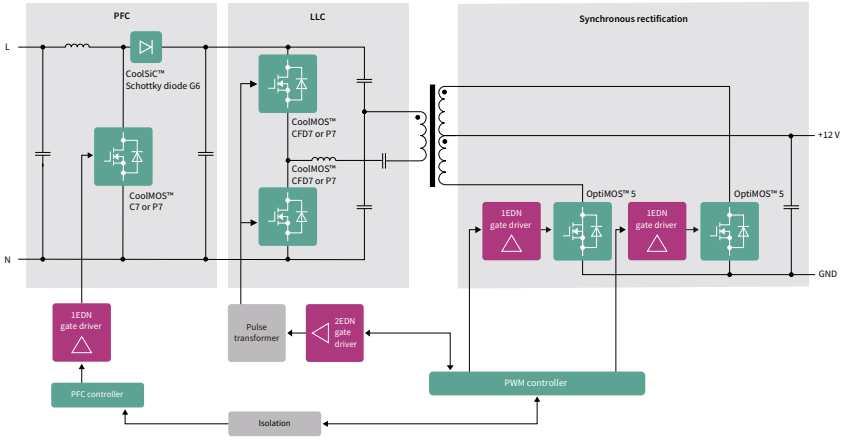

Features and benefits

Product features	Product benefits	Application benefits
› 4 A source/8 A sink current › 6 ns rise/5 ns fall times › ± 5 ns propagation delay precision	› Fast Miller plateau transition › Precise timing	› High power efficiency – in hard switching PFC with SiC diode – in half-bridges and synchronous rectifications
› True rail-to-rail low impedance output stages	› Low power dissipation in driver IC	› Cooler driver IC operation › Higher MOSFET drive capability
› 4 V and 8 V UVLO options › 19 ns propagation delay	› Fast and reliable MOSFET turn-off, independent of control IC	› Instant MOSFET protection during start-up and under abnormal operation
› -10 V robustness of inputs	› Increased GND-bounce robustness	› Crucial safety margin to drive pulse transformer
› 5 A reverse output current robustness	› Saving switching diodes	› Increases power density › BOM savings
› Industry standard pinout and packages	› Straight forward design upgrades	› Short time-to-market

Package		UVLO	Product name	Orderable part number	Pinout
	SOT-23 6-pin	4 V	1EDN7511B	1EDN7511BXUSA1	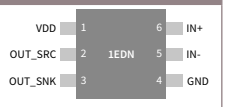
		8 V	1EDN8511B	1EDN8511BXUSA1	
	SOT-23 5-pin	4 V	1EDN7512B	1EDN7512BXTSA1	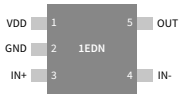
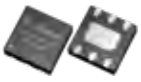	WSON 6-pin	4 V	1EDN7512G	1EDN7512GXTMA1	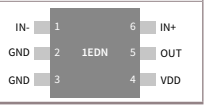

For more details on the product, click on the part number or contact our product support.

EiceDRIVER™ 1EDN7550 and 1EDN8550

Single-channel low-side gater-driver family with truly differential inputs prevents false triggering of power MOSFETs

Single-channel MOSFET gater-driver ICs are the crucial link between control ICs and powerful MOSFETs. The input signal levels of conventional low-side gater-driver ICs are referenced to the ground potential of the gater-driver IC. If in the application the ground potential of the gater-driver IC shifts excessively, false triggering of the gater-driver IC can occur. Gater-driver ground-shifts have two main causes: the parasitic ground inductance between where the gater-driver IC is placed and where the control-IC resides, and parasitic source inductances between the gater-driver IC and the MOSFET driven by it. Overcome ground-shift challenges in your design with Infineon's single-channel, low-side, EiceDRIVER™ gater-driver ICs with truly differential inputs. The 1EDN7550/1EDN8550 gater-driver ICs feature control signal inputs which are largely independent from the ground potential. Only the voltage difference between its input contacts is relevant, which prevents false triggering of power MOSFETs.

1EDN7550 driving CoolMOS™ SJ MOSFET on single-layer PCB

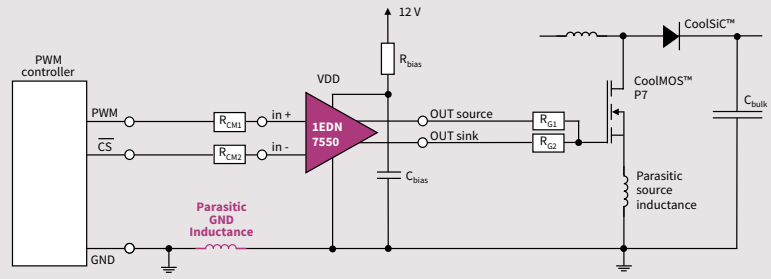

1EDN8550 driving Kelvin-source CoolMOS™ SJ MOSFET in boost

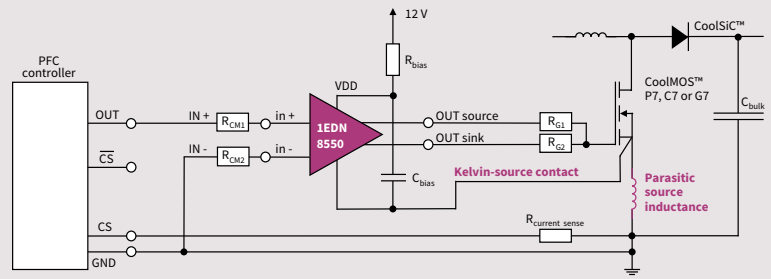

Pinout

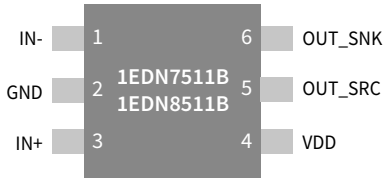

Features and benefits

Product features	Product benefits	Application benefits
› Truly differential inputs	› Control inputs independent from gate-driver GND	› Robust against ground shifts from power MOSFET switching
› 4 A source current › 8 A sink current › Separate source/sink outputs › Low-ohmic output stage	› Fast Miller plateau transition › Fast shut-off › No diode voltage drop → near zero gate voltage at turn-off › Low power dissipation within gate-driver IC	› Low MOSFET switching losses › Robust against false MOSFET triggering › Highest effective MOSFET driving power
› 29 ns input minimum pulse width › 7 ns propagation delay accuracy	› Up to 15 MHz switching speed › Precise	› Efficiency gains
› 5 A reverse current robustness of the outputs › 4 V and 8 V UVLO versions	› No Schottky clamping diodes required › Fast and reliable MOSFET turn-off	› Increased power density and BOM savings › Instant MOSFET protection under abnormal operation
› SOT-23 package, 6 pins	› Small	› High power density

Type	Ground shift robustness		UVLO	Package	Orderable part number
	dynamic	static			
1EDN7550B	+/- 150 V	+/- 70 V	4 V	SOT-23 6-pin	1EDN7550BXTSA1
1EDN8550B	+/- 150 V	+/- 70 V	8 V	SOT-23 6-pin	1EDN8550BXTSA1

For more details on the product, click on the part number or contact our product support.

EiceDRIVER™ 1EDB

Fast, robust, single-channel, basic isolated MOSFET gate drivers with accurate and stable timing

The EiceDRIVER™ 1EDB family of 1-channel gate-driver IC provides input-to-output isolation of 3 kV_{rms} (UL1577 pending). 1-channel isolated gate-driver ICs solve PCB-layout problems in high-power factor controllers (PFC) and high-voltage DC-DC stages. Applications also include multilevel topologies and use cases with 557 V_{rms} working voltage (pollution class II).

With ± 4 ns propagation delay accuracy, the gate-driver family is optimized for fast-switching applications with high system-level efficiencies. To support functionally save system operation, the common-mode transient immunity (CMTI) exceeds 300V/ns, typical output stage clamping speed is as short as 20 ns, and designers can choose between three different outputs-stage under-voltage lock-out (UVLO) variants (3.9 V, 7.0 V, 12.9 V).

The 1EDB gate-driver family is available in 8-pin DSO packages. For ease-of-design, the industry-standard pinout has separate source and sink output pins.

System application diagram

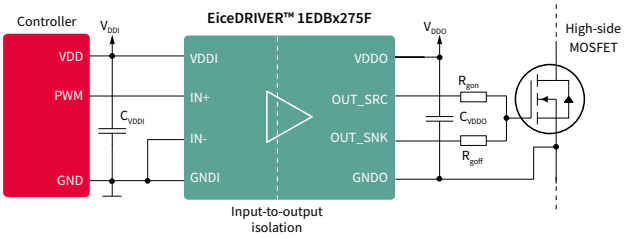

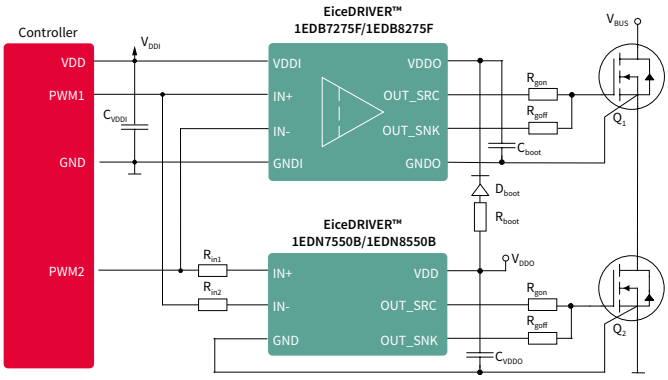

Features and benefits

Product features	Product benefits	Application benefits
› Strong low impedance outputs - Source 5.4 A/ 0.95 Ω - Sink 9.8 A/ 0.48 Ω	› Low MOSFET switching losses	› High system efficiency
› High propagation delay accuracy, ±4 ns	› Low dead-time losses	
› Rugged galvanic isolation, 3 kVrms (UL1577 pending)	› Ground loop seperation	
› High common-mode transient immunity CMTI > 300 kV/µs	› Excellent immunity against switching noise	› Safe and robust system operation
› Four UVLO options (4 V, 7V, 12 V, 14V)	› Reduced risk of leaving the safe operating area (SOA)	
› Fast output clamping speed, 20 ns (typ.)	› Shoot-through protection during boot-strapped half-bridge start-up	

Part number	Package	Certification	Rating	Typ. V_{DDO} UVLO, turn on	Typ. V_{DDO} UVLO, turn off	Typ. input filter time [ns]	Typ . propagation delay [ns]	Propagation delay accuracy over temperature and production	Typ. output current, V_{DDO} = 15V, V_{out} = 0 V, @ RT, Source	Typ. output current, V_{DDO} = 15V, V_{out} = 0 V, @ RT, Sink
1EDB6275F	8-pin DSO 150 mil	UL1577 (pend.)	V_{ISO} = 3000 V_{rms}	12.2 V	11.5 V	19 ns	45 ns	+/- 4 ns	5.4 Apeak	-9.8 A_{peak}
1EDB7275F	8-pin DSO 150 mil	UL1577 (pend.)	V_{ISO} = 3000 V_{rms}	4.2 V	3.9 V	19 ns	45 ns	+/- 4 ns	5.4 Apeak	-9.8 A_{peak}
1EDB8275F	8-pin DSO 150 mil	UL1577 (pend.)	V_{ISO} = 3000 V_{rms}	8.0 V	7.0 V	19 ns	45 ns	+/- 4 ns	5.4 Apeak	-9.8 A_{peak}
1EDB9275F	8-pin DSO 150 mil	UL1577 (pend.)	V_{ISO} = 3000 V_{rms}	13.7 V	12.9 V	19 ns	45 ns	+/- 4 ns	5.4 Apeak	-9.8 A_{peak}

For more details on the product, click on the part number or contact our product support.

EiceDRIVER™ 2EDN

Rugged, cool and fast, dual-channel low-side 4 A/5 A driver IC

Dual-channel driver ICs are the crucial link between digital control ICs and powerful MOSFET and GaN switching devices. EiceDRIVER™ 2EDN family is fast, precise, strong and compatible. In SMPS designs, high efficiency is enabled by 5 ns short slew rates and 10 ns propagation delay precision for fast MOSFET and GaN switching. The family offers numerous deployment options thanks to two 4 A/5 A channels. The channel-to-channel accuracy of 1 ns allows using two channels in parallel, while industry standard packages and pinout ease system design upgrades. EiceDRIVER™ 2EDN family offers the new reference in ruggedness and low power dissipation. A 5 A reverse output current robustness eliminates the need for Schottky switching diodes and reduces bill-of-material.

Application overview 800 W, 130 kHz switched mode power supply

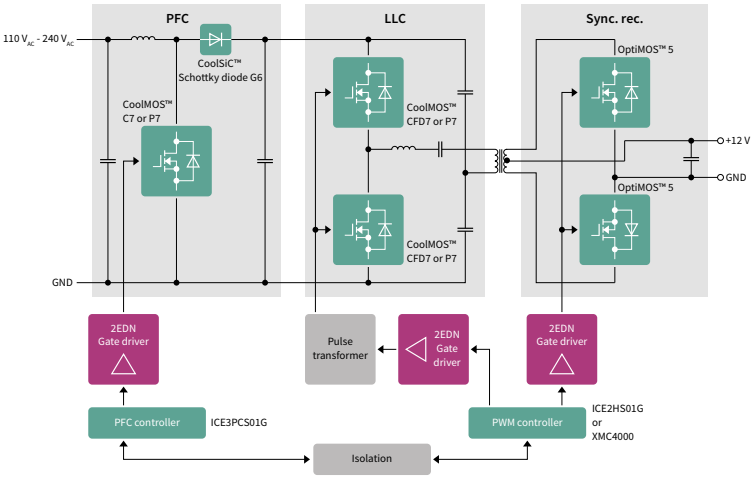

Industry standard pinout configuration

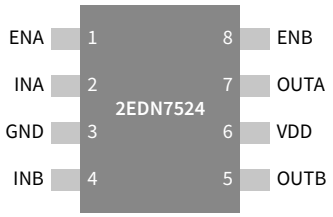

Features and benefits

Product features	Product benefits	Application benefits
› 5 A souce/sink current › 5 ns rise/fall times › <10 ns propagation delay precision	› Fast Miller plateau transition › Precise timing	› High power efficiency – in hard-switching PFC with SiC diode – in half-bridges and synchronous rectifications
› True rail-to-rail low impedance output stages	› Low power dissipation in driver IC	› Cooler driver IC operation › Higher MOSFET drive capability
› 4 V and 8 V UVLO options › 19 ns propagation delay for both control and enable inputs	› Fast and reliable MOSFET turn-off, independent of control IC	› Instant MOSFET protection under abnormal operation
› -10 V robustness of control and enable inputs	› Increased GND-bounce robustness	› Crucial safety margin to drive pulse transformer
› 5 A reverse output current robustness	› Saves switching diodes	› Increases power density › BOM savings
› 2 independent channels › Excellent 1 ns channel-to-channel accuracy	› Option to increase drive current by truly concurrent switching of 2 channels	› One IC covering many applications
› Industry standard pinout and packages	› Straight forward design upgrades	› Short time to market

Package		UVLO	Inputs	Product name	Orderable part number	Current
	DSO 8-pin	4 V	Direct	2EDN7524F	2EDN7524FXTMA1	5 A
			Inverted	2EDN7523F	2EDN7523FXTMA1	
			Direct	2EDN7424F	2EDN7424FXTMA1	4 A
		8 V	Direct	2EDN8524F	2EDN8524FXTMA1	5 A
			Inverted	2EDN8523F	2EDN8523FXTMA1	
	TSSOP 8-pin	4 V	Direct	2EDN7524R	2EDN7524RXUMA1	
			Inverted	2EDN7523R	2EDN7523RXUMA1	
			Direct	2EDN7424R	2EDN7424RXUMA1	4 A
		8 V	Direct	2EDN8524R	2EDN8524RXUMA1	5 A
			Inverted	2EDN8523R	2EDN8523RXUMA1	
	WSON 8-pin	4 V	Direct	2EDN7524G	2EDN7524GXTMA1	
			Inverted	2EDN7523G	2EDN7523GXTMA1	

For more details on the product, click on the part number or contact our product support.

EiceDRIVER™ 2EDi

Fast, robust, dual-channel, functional and reinforced isolated MOSFET gate drivers with accurate and stable timing

The EiceDRIVER™ 2EDi product family is designed for use in high-performance power conversion applications. Very strong 4 A/8 A source/sink dual-channel gate drivers increase efficiency in CoolMOS™ and OptiMOS™ MOSFET half-bridges. The low propagation delay of 37 ns, combined with highly accurate and stable timing overtemperature and production, enables further efficiency gains within and across galvanically isolated power stages or in multiphase/multilevel topologies. The availability of functional and reinforced isolated drivers in different packages makes them the perfect fit for both primary-side and (safe) secondary-side control. Gate driver outputs come with a high 5 A reverse current capability and 150 V/ns CMTI robustness for high dv/dt power loops. For slower switching or driving smaller MOSFETs, 1 A/2 A peak current product variants are available as well.

System application diagram

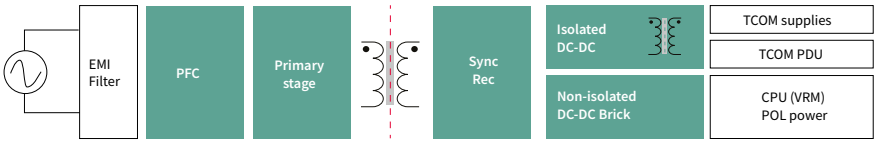

2EDF7275F 4 A/8 A
2EDF7175F 1 A/2 A

2EDS8265H 4 A/8 A
2EDS8165H 1 A/2 A

2EDF7275K 4 A/8 A
2EDF7235K 4 A/8 A w. DTC

Functional isolation

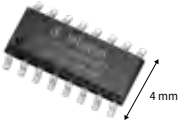

DSO 16-pin
Narrow body
1.27 mm lead pitch

Reinforced isolation

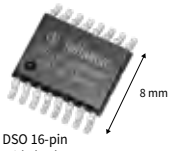

DSO 16-pin
Wide body
1.27 mm lead pitch

Functional isolation

LGA 13-pin 5x5 mm
0.65 mm lead pitch

Features and benefits

Product key features	Product benefits	System benefits
Fast power switching with accurate timing › Available with 4 A/8 A and 1 A/2 A source/sink currents › Propagation delay typ. 37 ns with 3 ns channel-to-channel mismatch › Max. delay variation ~14 ns	**Efficiency gain and lower losses** › Lower switching losses in half-bridges due to fast and accurate turn on/off › Perfect for new digital, fast high resolution PWM control including light load optimization	**Enabling higher system efficiency and higher power density designs**
Optimized for area and system BOM › Isolation and driver in one package › Low power dissipation due to low on-resistance › Output stages with 5A reverse current capability	**Improved thermal behavior at smaller form factor** › LGA with 1 mm, DSO with 2.3 mm package height versus volume > 1 cm³ for pulse transformers › Eliminates two costly protection diodes on the gate driver outputs	**Improving long term competitive cost position, integration and mass manufacturability**
Robust design against switching noise › Floating drivers are able to handle large inductive voltage over- and undershoots › Very good common mode transient immunity CMTI >150 V/ns › Undervoltage lockout function for switch protection	**Protection and safe operation** › Ideal for use in high power designs with fast switching transients › Reliable CT coreless transformer PWM signal chain to turn-on high-side MOSFETs	**Extending end-product lifetime** by improving safe operation of power switches in normal and abnormal field (grid) conditions
Output- to -output channel isolation › Functional level galvanic isolation	**Flexible configurations** › HS+LS, HS+HS, LS+LS or 2x Imax on 1xHS	**Lower EMI** by ground isolation, driver proximity to MOSFETs or the use of 4-pin Kelvin source MOSFETs
Input- to output channel isolation › Functional and reinforced galvanic isolation	**Regulatory safety** › Functional for primary-side control › Reinforced for secondary-side control	**Simplified safety approval** through component (VDE884-x, UL1577) and system (IEC60950, IEC62386) certificates

Part number	Orderable part number (OPN)	Package	PWM input type	Driver source/ sink current	Gate driver UVLO	Input to output isolation				Dead-time control
						Isolation class	Rating	Surge testing	Safety certification	
2EDF7275F	2EDF7275FXUMA2	NB-DSO16 10 x 6 mm	Dual mode (IN_A, IN_B)	4 A/8 A	4 V	Functional	V_{IO} =1.5 kVDC	n.a.	n.a.	no
2EDF7175F	2EDF7175FXUMA2			1 A/2 A						
2EDF8275F	2EDF8275FXUMA1			4 A/8 A	8V					
2EDF7275K	2EDF7275KXUMA2	LGA13 5.0 x 5.0 mm		4 A/8 A	4V					
2EDF7235K	2EDF7235KXUMA1									yes
2EDS7165H*	2EDS7165HXUMA1	WB-DSO16 10.3 x 10.3 mm		1 A/2 A	4V	Reinforced	V_{IOTM} = 8 kV_{peak} (VDE0884-1x) VISO = 5.7 kV_{rms} (UL1577)	V_{IOSM} = 10 kV_{peak} (IEC60065)	VDE0884-10 UL1577 IEC60950 IEC62368 CQC	no
2EDS8265H	2EDS8265HXUMA2			4 A/8 A	8 V					
2EDS8165H	2EDS8165HXUMA2			1 A/2 A						

* certification planned for the 2EDS7165H

For more details on the product, click on the part number or contact our product support.

EiceDRIVER™ 2EDL8 product family

Dual-channel junction-isolated gate-driver ICs

The EiceDRIVER™ 2EDL8 family of dual-channel junction-isolated gate-driver ICs is designed for medium voltage power MOSFETs in half-bridge applications such as telecom and datacom DC-DC converters. The 2EDL8 family comprises four variants:

- Designers can choose between two different pull-up currents: the 3 A version can be the right choice for retrofit designs. The industry-leading 4 A version is recommended to reduce MOSFET switching losses.
- The 2EDL8 family is available with two different input configurations: the 2EDL802x permits operation of both channels independently. For this reason, it is the perfect choice for diagonally driven full-bridges on the primary side as well as for the synchronous rectification stage on the secondary side because it permits reduction of the losses during the free-wheeling phase. The differential input structure of the 2EDL812x effectively renders it to be a half-bridge gate driver with built-in shoot-through protection, making it a good choice for the primary-side half-bridge stages with non-diagonal driving scheme.

Common to all four variants is their industry-standard leadless package and pin-out. Also, all of them have an integrated 120 V boot-strap diode as well as a precise channel-to-channel propagation delay matching of ±2 ns.

System application diagram

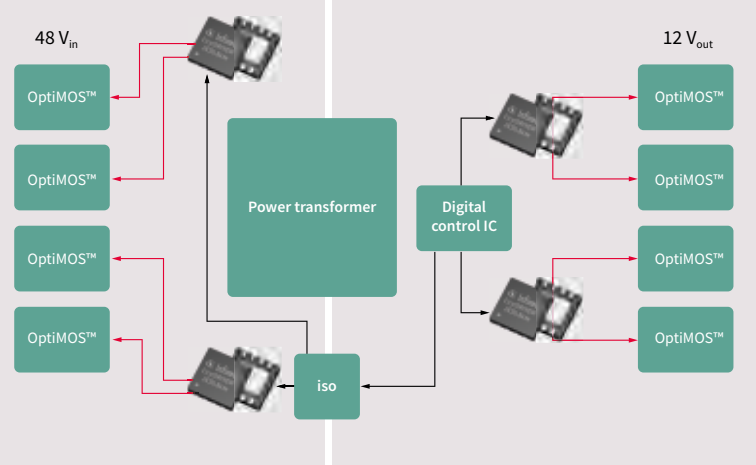

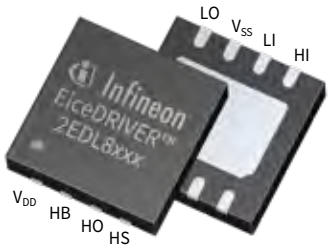

Features and benefits

Key features	Product benefits	System benefits
› 120 V boot-strap diode integrated	› No need for external boot strap diode	› High power density
› Low resistance rail-to-rail outputs: - Low-side: 4 A pull-up , 6 A pull-down - High-side: 4 A pull-up, 5 A pull-down	› Fast MOSFET switching › Strong pull-down current reduces risk of return-on from switching noise	› High efficiency › Strong MOSFET Reliability
› 4 ns delay matching	› Low dead-time losses	› High efficiency
› Differential inputs, optional	› Inherent shoot-through protection › -8 V/+15 V common mode rejection	› Strong MOSFET reliability › Robust operation

	Inputs			Controls timing		Integrated boot-strap diode		Outputs			
Part number	Configuration	On threshold min	Off threshold max	Minimum input pulse width	Delay matching	Abs. max HB voltage	Turn-off time	Low-side pull-up	Low-side pull-down	High-side pull-up	High-side pull-down
2EDL8023G	Independent inputs	2.9 V	1.0 V	40 ns_{max}	2 ns_{typ}	120 V_{max}	10 ns_{typ}	3 A_{peak}	6 A_{peak}	3 A_{peak}	5 A_{peak}
2EDL8024G								4 A_{peak}		4 A_{peak}	
2EDL8123G	Differential inputs							3 A_{peak}		3 A_{peak}	
2EDL8124G								4 A_{peak}		4 A_{peak}	

For more details on the product, click on the part number or contact our product support.

EiceDRIVER™ GaN

Single-channel isolated gate-driver ICs for high-voltage GaN switches

CoolGaN™ e-mode HEMTs are best driven by Infineon's EiceDRIVER™ GaN ICs, the 1EDF5673K, 1EDF5673F and 1EDS5663H. They ensure robust and highly efficient high-voltage GaN switch operation whilst concurrently minimizing R&D efforts and shortening time-to-market.

High-power SMPS application example

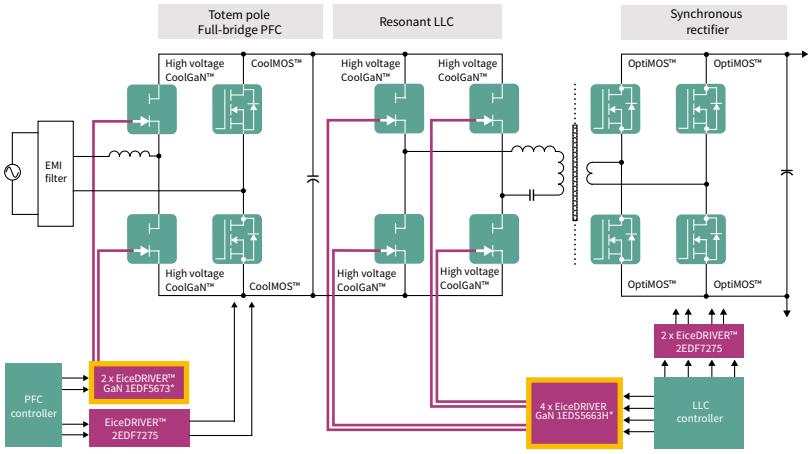

*EiceDRIVER™ GaN ICs are single-channel products

Key use cases

- Totem-pole PFCs
- Vienna rectifiers
- Multilevel topologies
- Resonant LLC

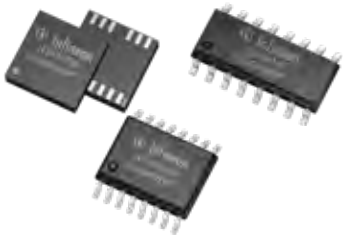

Features and benefits

Key features	Key benefits
Low ohmic outputs: › Source: 0.85 Ω › Sink: 0.35 Ω	**Positive and negative gate drive currents:** › Fast turn-on/turn-off GaN switch slew-rates
Single-channel galvanic isolation: Functional: › V_{IO}= 1500 V_{DC} › V_{IOWM} = 510 V_{rms} (DSO 16-pin) › V_{IOWM} = 460 V_{rms} (LGA 5x5) Reinforced: › V_{IOTM} = 8000 V_{pk} (VDE 0884-10 pending) › V_{IOWM} = 1420 V_{DC} › CMTI min: 200 V/ns	**Firmly hold gate voltage at zero, during off-phase:** › Avoids spurious GaN switch turn-on › Up to 50% lower dead time losses
Timing: › Minimum output pulse width: 18 ns › Propagation delay accuracy: 13 ns	**Configurable and constant GaN switching slew-rates, across wide range of switching frequency and duty-cycle:** › Robust and energy efficient SMPS designs › Short time to market
	Integrated galvanic isolation: › Robust operation in hard-switching applications › Safe isolation where needed

EiceDRIVER™ GaN ICs evaluation environment

High-frequency (1 MHz) half-bridge evaluation board EVAL_1EDF_G1B_HB_GAN

Key components:

GaN switches: 2x CoolGaN™ 600 V e-mode HEMTs (IGOT60R070D1)

GaN drivers: 2x EiceDRIVER™ GaN (1EDF5673K)

Order code: EVAL1EDFG1BHBGANTOBO1

Package	LGA 13-pin 5x5 mm	DSO 16-pin 150 mil	DSO 16-pin 300 mil
Product	1EDF5673K	1EDF5673F	1EDS5663H
OPN	1EDF5673KXUMA1	1EDF5673FXUMA1	1EDS5663HXUMA1
Isolation (input to output)	VI_O = 1500 V_{DC}	V_{IO} = 1500 V_{DC}	V_{IOTM} = 8000 V_{pk} (VDE0884-10 pending)
Source/sink output resistance	0.85 Ω/0.35 Ω	0.85 Ω/0.35 Ω	0.85 Ω/0.35 Ω
UVLO	5.5 V	5.5 V	5.5 V

For more details on the product, click on the part number or contact our product support.

650 V level shift SOI and JI gate driver for IGBTs and MOSFETs

EiceDRIVER™ 2ED210xS06 and 2ED218xS06 - 650 V half-bridge, high and low-side gate drivers with integrated bootstrap diode

The 2ED2106/08/09/091S06 and the 2ED2181/83/84S06 high-current gate-driver families are the matching choice for high-voltage power MOSFETs and IGBTs with half-bridge and high and low-side configuration. Based on SOI-technology, this device has excellent robustness and noise immunity with the capability to maintain operational logic at negative voltages of up to -11 V_{DC} on the V_S pin (V_{CC}=15 V) on transient voltages. With no parasitic structures, the device is immune to parasitic latch-up at all temperature and voltage conditions.

Simplified application diagrams

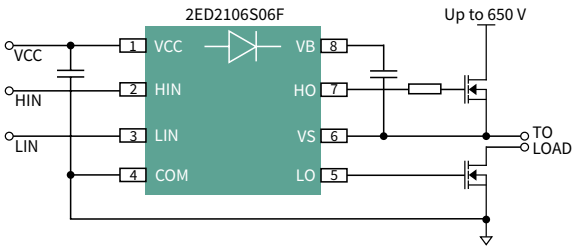

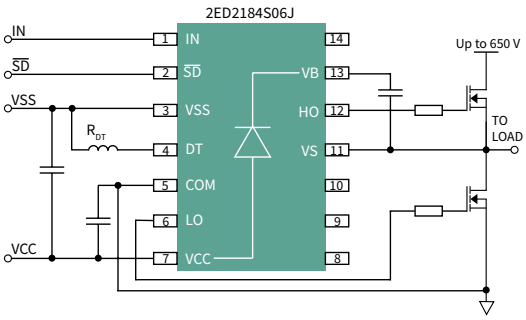

Features and benefits

Key benefits
› Infineon 650 V thin-film SOI-technology
› Integrated ultrafast, low resistance bootstrap diode
› Negative V_S transient immunity of 100 V
› Logic operational up to –11 V on V_S pin
› Separate logic and power ground (DSO-14)

Key benefits
› Low level shift losses, suitable for high-frequency application
› Quick time to market, reduced BOM cost
› High reliability and robustness
› SOI technology eliminates the parasitic bipolar transistors that are causing latch-up
› Integrated input filters enhance noise immunity

Power dissipation of Infineon SOI

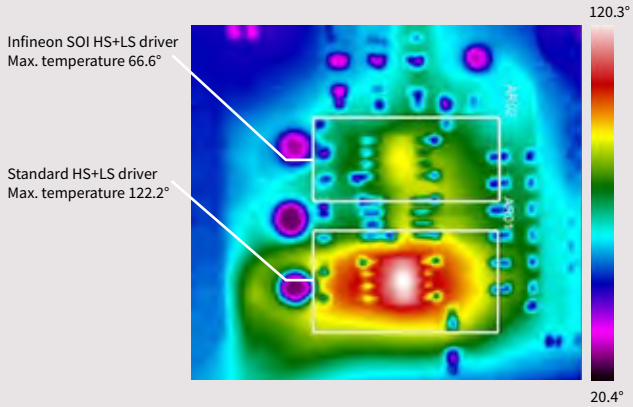

DC = 300 V; CoolMOS™ P7 in D-Pak; 300 kHz switching frequency

Part	Output current	Input Logic	Configuration	Deadtime	Package
2ED2106S06F	+0.29 A/-0.7 A	HIN, LIN	Hide side + Low side	none	DSO-8
2ED21064S06J					DSO-14
2ED2108S06F		HIN, /LIN	Half-bridge	540 ns	DSO-8
2ED21084S06J				Programmable	DSO-14
2ED2109S06F		IN, /SD		540 ns	DSO-8
2ED21094S06J		IN, DT/SD		Programmable	DSO-14
2ED21091S06F					DSO-8
2ED2181S06F	+2.5 A/-2.5 A	HIN, LIN	Hide side + Low side	None	DSO-8
2ED21814S06J					DSO-14
2ED2182S06F			Half-bridge	400 ns	DSO-8
2ED21824S06J				Programmable	DSO-14
2ED2183S06F		HIN, /LIN		400 ns	DSO-8
2ED21834S06J				Programmable	DSO-14
2ED2184S06F		IN, /SD		400 ns	DSO-8
2ED21844S06J				Programmable	DSO-14

Evaluation board : EVAL-M1-2ED2106S

Key components:

- 650 V high- and low-side gate driver with integrated bootstrap diode (2ED2106S06F)
- 650 V IGBT6 (IKB10N65ET6)

Order code: EVALM12ED2106STOBO1

For more details on the product, click on the part number or contact our product support.

650 V level shift SOI and JI gate drivers for IGBTs and MOSFETs

EiceDRIVER™ 2ED28073J06F - 600 V half-bridge junction-isolated gate driver with integrated bootstrap FET

The 2ED28073J06F is a high voltage, high-speed power MOSFET and IGBT driver with dependent high- and low-side referenced output channels. It is optimized to drive CoolMOS™ PFD7 in motor drive applications. Proprietary HVIC and latch immune CMOS technologies enable ruggedized monolithic construction. The output drivers feature a high-pulse current buffer stage designed for minimum driver cross-conduction. The floating channel can drive N-channel power MOSFETs or IGBTs in the high-side configuration that operates up to 600 V.

Typical application diagram

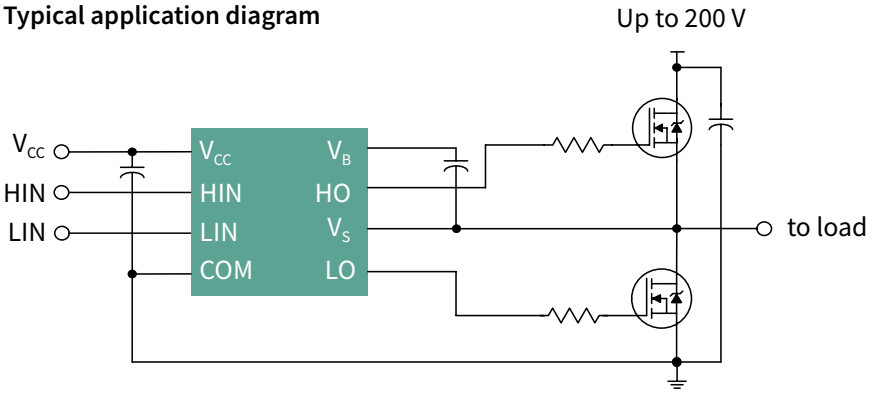

Features and benefits

Key features	Key benefits
› Source current/sink current: + 20 mA/ - 80 mA	› Smaller current for low power drive application with CoolMOS™ PFD7, reduced system cost of high voltage capacitor (C_{DS}).
› Negative V_S transient immunity of 70 V, dV/dt immune	› High reliability and robustness
› Lower di/dt gate driver	› Better noise immunity
› Integrated bootstrap FET	› Quick time to market, reduced BOM cost
› Integrated short pulse/noise rejection filter	› An improvement in the input/output pulse symmetry of the driver and helps to reject noise spikes and short pulses

Evaluation board

EVAL_DRIVE_3PH_PFD7

Key components:

- CoolMOS™ PFD7 gate driver suitable for low-power drives (2ED28073J06F)
- 600 V CoolMOS™ PFD7 MOSFET (IPN60R1K5PFD7S)

Order code: EVALDRIVE3PHPFD7TOBO1

The EVAL_DRIVE_3PH_PFD7 is a three-phase motor drive evaluation board with sensorless field-oriented control (FOC). It demonstrates Infineon's latest SJ technology tuned specially for motor drives by introducing a complete system-level solution using discrete inverters to control and drive three-phase motors. The EVAL_ DRIVE_3PH_PFD7 evaluation board has been developed to support customers in their first steps of designing a three-phase inverter stage for the target applications

For more details on the product, click on the part number or contact our product support.

1200 V level shift SOI gate driver

6ED2230S12T - 1200 V three-phase gate driver with overcurrent protection and integrated bootstrap diode (BSD)

The 6ED2230S12T is a 1200 V three-phase SOI gate driver with an integrated bootstrap diode and overcurrent protection, with typical 0.35 A source and 0.65 A sink currents in a DSO-24 package (DSO-28 with 4 pins removed) for driving IGBTs. Proprietary HVIC and latch-immune CMOS technologies enable a robust monolithic design. A current-trip function that terminates all six outputs can also be derived from this resistor. An open-drain FAULT signal is provided to indicate that an overcurrent or undervoltage shutdown has occurred. Fault conditions are cleared automatically after a delay programmed externally via an RC network. The output drivers feature a high pulse current buffer stage designed for minimum driver cross conduction. Propagation delays are matched to simplify the HVIC's use in high-frequency applications.

Typical application diagram

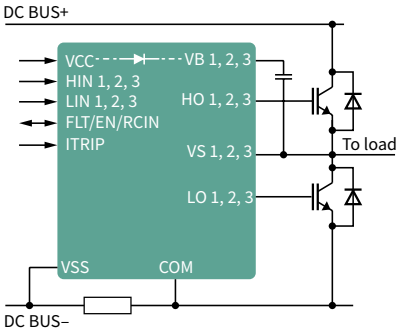

Features and benefits

Key benefits
› Infineon thin-film SOI technology
› Output source/sink current capability +0.35 A/-0.65 A
› Integrated ultrafast, low $R_{DS(on)}$ bootstrap diode
› Overcurrent protection (ITRIP ±5% reference)
› Fault reporting, automatic fault clear and enable function on the same pin (RFE)

Key benefits
› Tolerant to negative transient voltage up to -100 V (pulse width is up 700 ns) given by SOI technology, high reliability and robustness
› Drive 1200 V IGBT and SiC MOSFET
› Quick time to market, reduced BOM cost
› Advanced protection

Negative V_S transient robustness of Infineon SOI

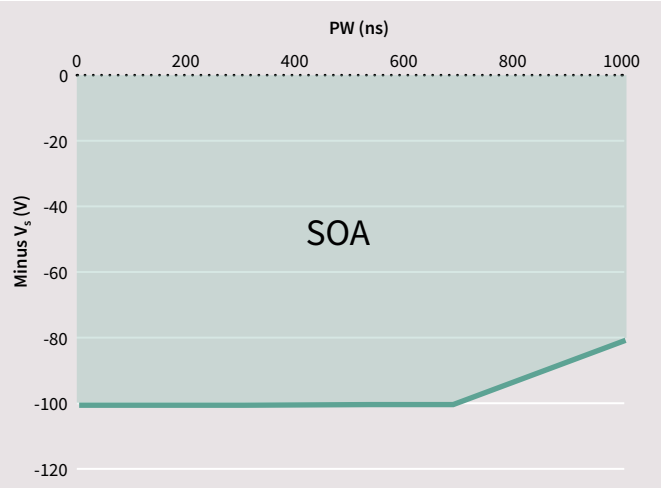

Negative V_S transient SOA characterization @ V_{BS}=15 V of 6ED2230S12T

Evaluation board available: EVAL-M1-6ED2230-B1

Key components:

- 1200 V three-phase gate driver with integrated bootstrap diode (6ED2230S12T)
- 1200 V, 15 A three-phase PIM IGBT module (FP15R12W1T4)

Order code: EVALM16ED2230B1TOBO1

For more details on the product, click on the part number or contact our product support.

200 V level shift SOI and JI gate drivers for MOSFET

Half-bridge, high- and low-side, three-phase gate-driver family for low-voltage motor drives

Infineon offers 200 V ICs tailored for low-voltage (24 V, 36 V, and 48 V) and mid-voltage (60 V, 80 V, and 100 V) motor drive applications. These MOSFET drivers provide full driver capability with breakneck switching speeds, designed-in ruggedness and low power dissipation. The 200 V driver ICs are offered in standard packages and pinout configurations with various logic input options for high design flexibility and fast time to market. Low-side supply voltage (V_{CC}) and floating channel supply (V_{BS}) undervoltage lockout (UVLO) ensure reliable start-up operation. The three-phase product family utilizes Infineon's unique silicon-on-insulator (SOI) level shift technology to provide functional isolation with industry-leading negative V_S robustness and reduced level shift losses. The family provides integrated bootstrap diodes (BSD) to reduce BOM cost, simplify the layout, and reduce the PCB size.

Simplified application diagram

IRS2008S

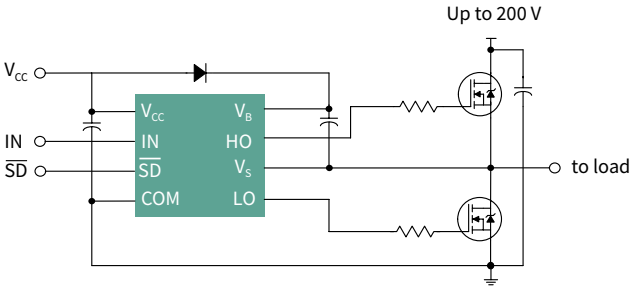

6EDL04N02PR

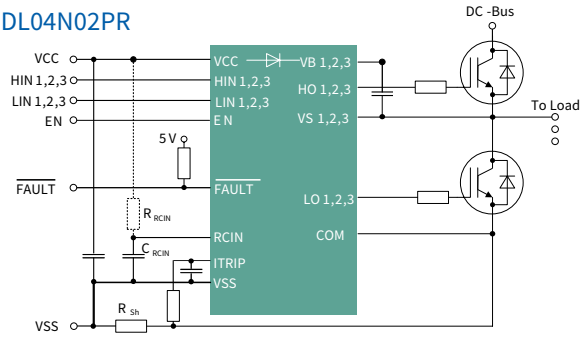

Features and benefits

Key features	Key benefits
› V_{CC} UVLO protection with V_{BS} UVLO for IRS2005/7/8	› Fast and reliable switching
› Deadtime and cross-conduction prevention logic	› Protection under abnormal operation
› Three-phase solution with silicon-on-insulator (SOI) technology with integrated bootstrap diodes (BSD)	› Ensure reliable start-up operation
› Deadtime and cross-conduction prevention logic	› Reduced BOM cost, smaller PCB at lower cost with simpler design
› Fully operational to +200 V off set voltage	› Increased negative V_S robustness for increased reliability
› Tolerate to negative transient voltage, dV/dt immune	› Increased device reliability, operational headroom
› Low quiescent current	› Low-cost bootstrap power supply
› Various input options , standard pin-out and packages	› Easy-to-use, straight-forward design
	› Fast time to market

Evaluation board

EVAL-PS-IRS200X for stepper motor

Key components:

- 200 V high-side and low-side level-shift gate driver (IRS2005S)
- OptiMOS™ 3 power MOSFET 100 V (IPP180N10N3 G)

Order code: EVALPSIRS200XTOBO1

Evaluation board

EVAL-6EDL04N02PR for battery-powered application

Key components:

- 200 V three-phase gate driver with integrated bootstrap diode (6EDL04N02PR)
- OptiMOS™ power MOSFET 80 V (BSB044N08NN3 G)

Order code: EVAL6EDL04N02PRTOBO1

Part number	Voltage class [V]	Configuration	Channels	Source/sink current typ. [mA]	Deadtime typ. [ns]	Typ. propagation delay [ns]		Control inputs	UVLO typ. [V]	Package	MSL
						on	off				
IRS2008S, IRS2008M	200	Half-bridge	2	290/600	520	680	150	IN, SD	+8.9/-8.2	DSO-8, MLPQ-14L	2
IRS2007S, IRS2007M	200	Half-bridge	2	290/600	520	160	150	HIN, LIN	+8.9/-8.2	DSO-8, MLPQ-14L	2
IRS2005S, IRS2005M	200	High- and low-side	2	290/600	–	160	150	HIN, LIN	+8.9/-8.2	DSO-8, MLPQ-14L	2
IRS2011S	200	High- and low-side	2	1000/1000	–	60	60	HIN, LIN	+9.0/-8.2	DSO-8	2
IR2010S	200	High- and low-side	2	3000/3000	–	95	65	HIN, LIN, SD	+8.6/-8.2	DS0-16 (WB)	3
6EDL04N02PR	200	Three-phase	6	165/375	310	530	530	HIN, LIN	+9/-8.1	TSSOP-28	3
6ED003L02-F2	200	Three-phase	6	165/375	310	530	530	HIN, LIN	+9/-8.1	TSSOP-28	3

For more details on the product, click on the part number or contact our product support.

Non-isolated low-side gate-driver ICs

1ED44173/5/6 - 25 V low-side gate driver with integrated overcurrent protection, fault reporting, and enable function

The 1ED44173N01B, 1ED44175N01B, and 1ED44176N01F are low-voltage, non-inverting, low-side gate drivers designed for ground-referenced applications such as digitally controlled power-factor correction (PFC) circuits requiring overcurrent protection (OCP). OCP is typically implemented by using a current measurement circuit with a comparator such as LM293 and a network of resistors and capacitors. 1ED44173N01B, 1ED44175N01B, and 1ED44176N01F also integrate up to 20% cost and 50% space savings by integrating the OCP comparator, which features a fast and accurate current-sensing threshold tolerance of ±5%. 1ED44173N01B, 1ED44175N01B, and 1ED44176N01F also integrate fault-output reporting to the controller and driver enable functionality in one pin. 1ED44176N01F has separate logic and power ground pins for operational robustness.

Simplified application diagram

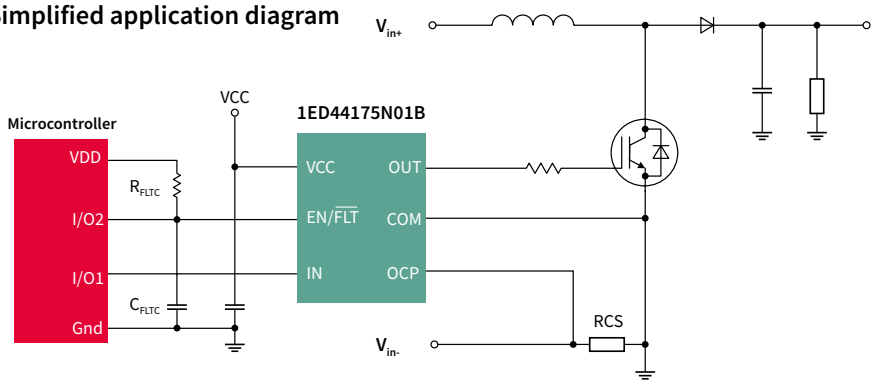

Features and benefits

Product features	Product benefits	Application benefits
› Integrated overcurrent protection comparator with accurate OCP threshold	› 0.5 V overcurrent threshold with accurate ±5 percent tolerance	› Potential space savings up to 50 percent and cost savings up to 20 percent compared to the discrete solution
› Single pin for fault output and enable function	› Internal Schmitt trigger comparator for the enable function	› Flexible fault clear time setup for different micro- controller processing speeds
› Programmable fault clear time	› External capacitor (C_{FLTC}) sets the length of the fault clear time	› Eliminates switching loss at low V_{CC} supply voltage
› Under-voltage lockout (UVLO) protection	› Specific UVLO level for IGBTs and MOSFETs (1ED44176/5 typ. on/off = 11.9 V / 11.4 V) (1ED44173 typ. on/off = 8.0 V / 7.3 V	› More robust against V_{CC} spikes in harsh circuit applications
› Wide supply voltage range	› 25 V V_{CC} Max	› Avoids noise coupling from output to input which improves noise immunity
› Separate logic ground and gate driver return (1ED44176N01F)	› V_{SS} and COM pins (1ED44176N01F)	

Evaluation boards:
EVAL-1ED44176N01F
EVAL-1ED44175N01B
EVAL-1ED44173N01B

Key components:
› 25 V low-side gate driver with integrated OCP (1ED4417x)

Order code:
EVAL1ED44176N01FTOBO1
EVAL1ED44175N01BTOBO1
EVAL1ED44173N01BTOBO1

Reference board:
REF-AIRCON-C302A-IM564

Key components:
› Turnkey motor drive for air conditioner outdoor units (ODU) with 1ED44175N01B PFC gate driver
› CIPOS™ Mini IPM
› iMOTION™ controller
› CoolSET™ power MOSFET 30 V (IRLML2803)

Order code:
REFAIRCONC302AIM564TOBO1

For more details on the product, click on the part number or contact our product support.

2ED24427N01F – 24 V, 10 A dual low-side gate driver with enable-function in DSO-8 package with thermal pad

The 2ED24427N01F is a low-voltage, power MOSFET and IGBT non-inverting gate driver. Proprietary latch immune CMOS technologies enable rugged monolithic construction. The logic input is compatible with standard CMOS or LSTTL output. The output drivers feature a high pulse current buffer stage designed for minimum driver cross-conduction. Propagation delays between two channels are matched. Internal circuitry on the V_{CC} pin provides an undervoltage lockout protection that holds output low until V_{cc} supply voltage is within operating range.

Simplified application diagram

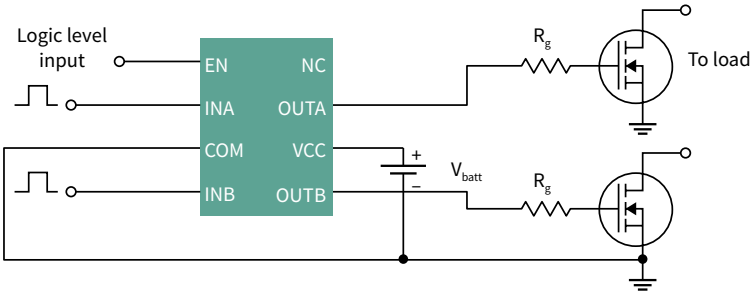

Features and benefits

Key features	Key benefits
10 A sink and 10 A source driver capability	Suitable for IGBT/MOSFET paralleling, transformer driver, easily drive low $R_{DS(on)}$ MOSFETs at high switching frequencies
11.5 V undervoltage lockout	Can be used as external booster
24 V maximum supply voltage	Robustness in noisy environment
Enable function	Dedicated pin to terminates all outputs
DSO-8 package with thermal pad	Smaller thermal resistor, bigger Power dissipation

In half-bridge LLC or full-bridge ZVS power topologies, the 2ED24427N01F can easily drive low $R_{DS(on)}$ high-voltage MOSFETs in a half-bridge at high-switching frequencies. In synchronous rectification, more than two MOSFETs can be paralleled and driven from a single channel of the driver. One 2ED24427 device can efficiently drive both synchronous rectification legs. When higher current is needed, the 2ED24427N01F can boost the current from a regular gate driver and drive high current IGBTs or MOSFETs or EasyPACK™ or EconoPACK™ power modules.

Evaluation board

EVAL-2ED2101 HB-LLC*

Key components:

- 200 W HB-LLC 500 kHz reference design kit with 2ED24427N01F low-side gate driver and 2ED2101S06F 650 V SOI high- and low-side gate driver for synchronous rectification
- 600 V CoolMOS™P6 ThinPAK MOSFETs

Order code:

EVAL2ED2101HBLLCTOBO1

* For more information on the product, contact our product support

For more details on the product, click on the part number or contact our product support.

EiceDRIVER™ 1ED Compact (1ED-AF/MF)

1200 V, 10 A single-channel, isolated driver family with Miller clamp or separate output

Infineon's EiceDRIVER™ 1ED Compact family 1ED-AF and 1ED-MF provides Miller clamp or separate output options, together with active shutdown and short circuit clamping in DSO-8 150 mil package. The active Miller clamp function is highly recommended for SiC MOSFET 0 V turn off and IGBT7. 1ED Compact offers CMTI up to 100 kV/µs, and up to 10 A typical output current. Suitable for applications including but not limited to solar inverter, EV charging, industrial drives, CAC, induction cooking, CAV, UPS, and server and telecom SMPS. The 1ED Compact is the most cost-effective family in the EiceDRIVER™ isolated driver family and ideal for IGBTs, MOSFETs, and SiC MOSFETs.

Simplified application diagram

Separate sink/source outputs

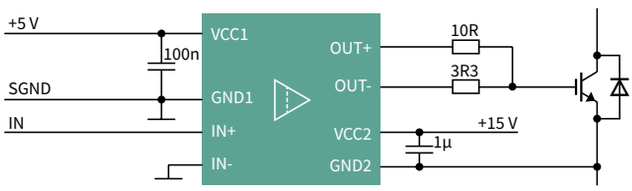

Active Miller clamp

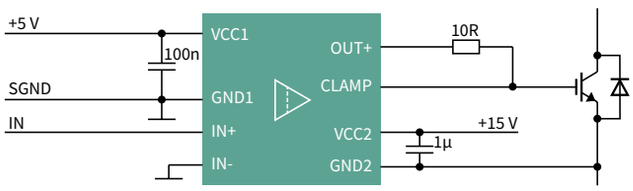

Features and benefits

Key features	Key benefits
DSO-8 150 mil wide body package with 4 mm creepage distance	Small, space-saving package
Integrated input filter	No external filter needed, cost saving and robustness
Up to 10 A typical peak rail-to-rail output	Avoids wrong switching patterns in rugged environments
100 kV/µs CMTI	Optimized pinout for low inductance power supply
Active Miller clamp or separate output	Higher dynamic range in PWM modulation and shorter dead time
15 ns propagation delay matching	Higher robustness in rugged environments
Short circuit clamping and active shutdown	Suitable for operation at high ambient temperature

Evaluation boards:	Key components:	Key components:
EVAL-1EDI60I12AF	TRENCHSTOP™ 5 IGBT IKW50N65F5	EVAL1EDI60I12AFTOBO1
EVAL_HB_PARALLELGAN	1EDI20N12AF and CoolGaN™ 600 V HEMT IGOT60R070D1	EVALHBPARALLELGANTOBO1
EVAL_2500W_PFC_GAN_A	1EDI20N12AF and CoolGaN™ 600 V HEMT IGOT60R070D1	EVAL2500WPFCGANATOBO1
EVAL-PS-E1BF12-SIC	1EDI60I12AF and CoolSiC™ MOSFET modules FF11MR12W1M1_B11	EVALPSE1BF12SICTOBO1

Product	Package	Applications	Voltage class	Typ. output current	Separate sink/ source outputs	Active Miller clamp	Propagation delay	Recommendation
1EDI60I12AF	DSO-8 150 mil	General-purpose inverters, industrial drives, welding, UPS	1200 V	10 A/-9.4 A	yes	-	300 ns	All 650 V and 1200 V IGBT and SiC MOSFETs
1EDI40I12AF				7.5 A/-6.8 A	yes	-		
1EDI20I12AF				4 A/-3.5 A	yes	-		
1EDI05I12AF				1.3 A/-0.9 A	yes	-		
1EDI60N12AF		Drives, SMPS, PFC, telecom, server, photovoltaic, buck/boost		10 A/-9.4 A	yes	-	125 ns	All 650 V and 1200 V MOSFET and SiC MOSFETs
1EDI20N12AF				4 A/-3.5 A	yes	-		
1EDI30I12MF		General-purpose inverters, industrial drives, welding, UPS		5.9 A/-6.2 A	-	yes	300 ns	All 650 V and 1200 V IGBT and SiC MOSFETs
1EDI20I12MF				4.4 A/-4.1 A	-	yes		
1EDI10I12MF				2.2 A/-2.3 A	-	yes		

For more details on the product, click on the part number or contact our product support.

EiceDRIVER™ X3 Compact (1ED31xx)

5.7 kV, 14 A single-channel, isolated driver family with Miller clamp or separate output

Infineon's EiceDRIVER™ X3 Compact family 1ED31xx provides Miller clamp or separate output options, together with active shutdown and short circuit clamping in DSO-8 150 mil and 300 mil package. The active Miller clamp function is highly recommended for SiC MOSFET 0 V turn off and IGBT7. X3 Compact offers a benchmark CMTI of 200 kV/µs, and a typical 5/10/14 A output current. The tight propagation delay matching (7 ns max.) results in shorter deadtime. Suitable for applications like solar inverter, EV charging, industrial drives, CAC, induction cooking, CAV, UPS, server and telecom SMPS, etc. EiceDRIVER™ X3 Compact family is recognized under UL 1577 with V_{ISO} = 5.7 kV_{rms} for 1 min and VDE 0884-11 with V_{IORM} = 1767 V (reinforced). The 1ED31xx is rated up to 2300 V functional isolation and ideal for IGBTs, MOSFETs, and SiC MOSFETs.

Simplified application diagram

Separate sink/source outputs

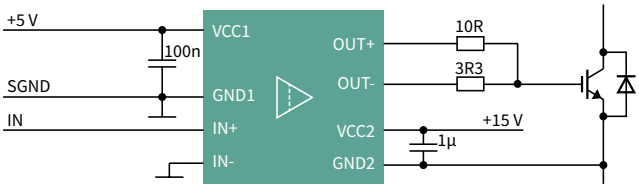

Active Miller clamp

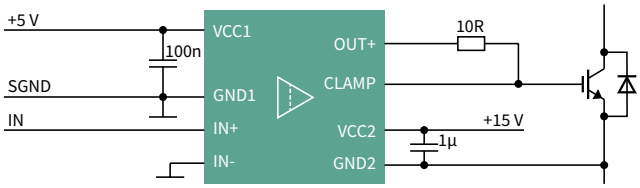

Features and benefits

Key features	Key benefits
› DSO-8 300 mil wide body package with 8 mm creepage distance	› Small, space-saving package with large creepage distance (>8 mm)
› Up to 14 A typical peak rail-to-rail output	› No external filter needed, cost saving and robustness
› 200 kV/µs CMTI	› Avoids wrong switching patterns in rugged environments
› Active Miller clamp or separate output	› Optimized pinout for low inductance power supply
› 7 ns propagation delay matching	› Higher dynamic range in PWM modulation and shorter deadtime
› Short circuit clamping and active shutdown	› Higher robustness in rugged environments
› UL 1577 (V_{ISO} = 5.7 kV (rms)), VDE 0884-11 (V_{IORM} = 1767 V (peak, reinforced))	› Up to 2300 V functional isolation capable

Evaluation board	Key components:	Key components:
EVAL-1ED3121MX12H	TRENCHSTOP™ IGBT HighSpeed 3	EVAL1ED3121MX12HTOBO1
EVAL-1ED3122MX12H	IKQ75N120CH3	EVAL1ED3122MX12HTOBO1
EVAL-1ED3124MX12H		EVAL1ED3124MX12HTOBO1
REF-22K-GPD-INV-EASY3B	1ED3131MC12H and EasyPIM™ 3B	REF22KGPDINVEASY3BTOBO1

Product	Package	Voltage class	Typ. output current	Propagation delay	Input filter	CMTI	Output supply voltage	Propagation delay matching	UVLO (on)
1ED3131MU12H	DSO-8 150 mil	2300 V	±5.5 A	280 ns	180 ns	200 kV/µs	40 V	7 ns	12 V
1ED3124MU12F	DSO-8 150 mil		±14 A	90 ns	30 ns				10 V or 12 V
1ED3123MU12H	DSO-8 300 mil		±14 A						
1ED3124MU12H	DSO-8 300 mil		±14 A						
1ED3120MU12H	DSO-8 300 mil		±5.5 A						
1ED3121MU12H	DSO-8 300 mil		±5.5 A						
1ED3125MU12F	DSO-8 150 mil		±10 A (Miller Clamp)						
1ED3122MU12H	DSO-8 300 mil								

For more details on the product, click on the part number or contact our product support.

EiceDRIVER™ 2L-SRC Compact (1ED32xx)

5.7 kV, 18 A single-channel isolated gate driver with two-level slew-rate control

EiceDRIVER™ 2L-SRC Compact family 1ED32xx is a single-channel isolated gate driver with two-level slew-rate control (2L-SRC) and 18 A typical sinking and sourcing peak output current in DSO-8 wide-body package with large creepage distance (>8 mm) for IGBTs, MOSFETs, SiC MOSFETs. The slew-rate control feature allows customers to change the output current on the fly and reduce EMI significantly in drives application.

1ED3241 offers two separate outputs with 18 A typical peak output current to control two independent gate resistances, thus enabling two-level slew-rate control. The driver can operate over a wide supply voltage range, either unipolar or bipolar. 1ED3251 also offers Miller clamp function, especially for SiC MOSFET, IGBT7, and other high power applications against parasitic turn on.

Simplified application diagram

Separate sink/source outputs

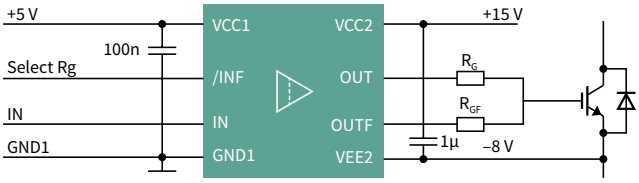

Active Miller clamp

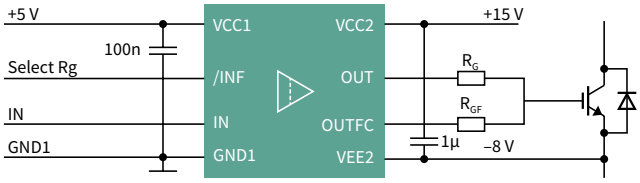

Features and benefits

Key features	Key benefits
› Two-level slew-rate control feature (2L-SRC)	› DSO-8 300 mil wide-body package with large creepage distance (>8 mm)
› 18 A typical sinking and sourcing peak output current	› Integrated filters reduce the need of external filters
› 100 ns propagation delay with 30 ns input filter	› 40 V absolute maximum output supply voltage
› High common-mode transient immunity CMTI >200 kV/µs	› Tight propagation delay matching between outputs enables superior slew-rate control functionality over discrete solutions
› Active Miller Clamp	› High isolation capability, can be used in 1700 V drives inverter applications
› Short circuit clamping and active shutdown	› Up to 2300 V functional isolation capable
› UL 1577 (V_{ISO} = 5.7 kV_{rms}), VDE 0884-11 (V_{IORM} = 1767 V (peak, reinforced))	

Evaluation board

EVAL-1ED3241MC12H *

EVAL-1ED3251MC12H *

Key components:

› CoolSiC™ 1200 V IMZ120R045M1

› TRENCHSTOP™ 5 IGBT IKW50N65F5

Order code:

EVAL1ED3241MC12HTOBO1

EVAL1ED3251MC12HTOBO1

Part Number	1ED3240MC12H	1ED3241MC12H	1ED3250MC12H	1ED3251MC12H
Package	DSO-8 300-mil			
Output current	+/- 10 A	+/- 18 A	+/- 10 A	+/- 18 A
Slew rate control	@ turn-on and turn-off		@ turn-on only	
Output configuration	Standard		Miller clamp	

*Coming soon

For more details on the product, click on the part number or contact our product support.

EiceDRIVER™ Enhanced 1ED/2ED-F2 and 2ED-FI

1200 V, 2 A single and dual-channel, isolated driver family with DESAT and Miller clamp

The EiceDRIVER™ Enhanced 1ED020I12-F2/B2 (1ED-F2/B2) gate-driver ICs are galvanic isolated single-channel IGBT and SiC MOSFET drivers in a DSO-16 package that provides output current capabilities of typically 2 A. The precision DESAT function for IGBT is also an excellent solution for SiC MOSFET short-circuit protection. 2ED020I12-F2 (2ED-F2) is the dual-channel version of 1ED020I12-F2 (1ED-F2) in a DSO-36 package. 2ED020I12-FI (2ED-FI) is a half-bridge isolated driver that integrates OPAMP and comparator, which can be utilized as overcurrent protection (OCP).

Simplified application diagram

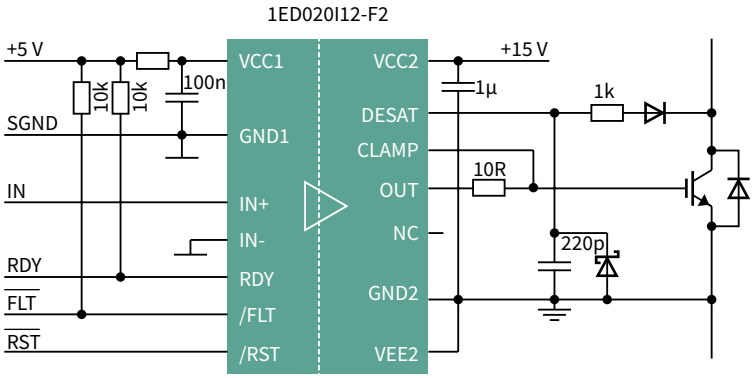

Features and benefits

Key features	Key benefits
› Best-in-class desaturation detection	› Protect the power switch from damage during short circuit condition
› Active Miller clamp	› Small space-saving package with large creepage distance (>8 mm)
› 100 kV/µs CMTI	› Avoids wrong switching patterns in rugged environments
› Short circuit clamping and active shutdown	› No external filter needed, cost saving and robustness
› Combinable Enable/Shutdown and Fault Feedback signals	› Higher dynamic range in PWM modulation and shorter deadtime
› Bipolar output supply	› Suitable for operation at high ambient temperature
› Inverting and non-inverting inputs	› Higher robustness in rugged environments

Evaluation board:	Key components:	Order code:
EVAL-1ED020I12-B2	› 1ED-B2 with EasyPACK™ 1B IGBT module (FS25R12W1T4_B11)	EVAL1ED020I12B2TOBO1
EVAL-1ED020I12-BT	› 1ED-BT with TRENCHSTOP™ IGBT 4 (IKW25N120H3)	EVAL1ED020I12BTTOBO1
EVAL-2ED020I12-F2	› 2ED-F2 with TRENCHSTOP™ IGBT 3 (IKP20N60H3)	EVAL2ED020I12F2TOBO1
EVAL-1ED020I12F2-DB	› Daughter board for EVAL-SiC-DP-V2 to evaluate CoolSiC™ MOSFET	EVAL1ED020I12F2DBTOBO1

Product	Package	Configuration	Galvanic isolation	Protection function	Input	Output	DESAT charge current	Typical propagation delay
1ED020I12-F2	DSO-16	Single	Functional	DESAT, UVLO	4.1 V/3.8 V	12 V/11 V	500 A	170 ns
2ED020I12-F2	DSO-36	Dual	Functional	DESAT, UVLO				170 ns
1ED020I12-FT	DSO-16	Single	Functional	DESAT, UVLO, Two-level turn-off				170 ns + TLTOff
1ED020I12-B2	DSO-16	Single	UL 1577; VDE 0884-10	DESAT, UVLO				170 ns
1ED020I12-BT	DSO-16	Single	UL 1577; VDE 0884-10	DESAT, UVLO, Two-level turn-off				170 ns + TLTOff
2ED020I12-FI	DSO-18	Half-bridge	Functional on high-side	UVLO, OPAMP, comparator	12 V/11 V		no	85 ns

For more details on the product, click on the part number or contact our product support.

EiceDRIVER™ Enhanced X3 Analog (1ED34xx) and X3 Digital (1ED38xx)

5.7 kV, 9 A single-channel, isolated driver family with DESAT, soft-off, and I2C configurability

The X3 Analog (1ED34xx) and X3 Digital (1ED38xx) family are galvanic-isolated single-channel gate driver ICs in a small DSO-16 fine pitch package with a large creepage and clearance of 8 mm. The gate driver ICs provide a typical peak output current of 3 A, 6 A, and 9 A. The precision DESAT function for IGBT is also an excellent solution for SiC MOSFET short-circuit protection. Both X3 analog and digital families offer active Miller clamp, separate sink, and source output. The 1ED34xx analog family provides adjustable DESAT filter time and adjustable Soft- off current level functionality. The 1ED38xx digital family provides I2C configurability for multiple parameters, including DESAT, soft-off, UVLO, active Miller clamp, over-temperature shutdown, two-level turn-off through software.

Simplified application diagram

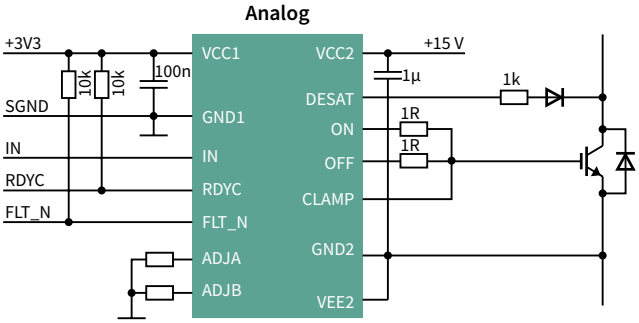

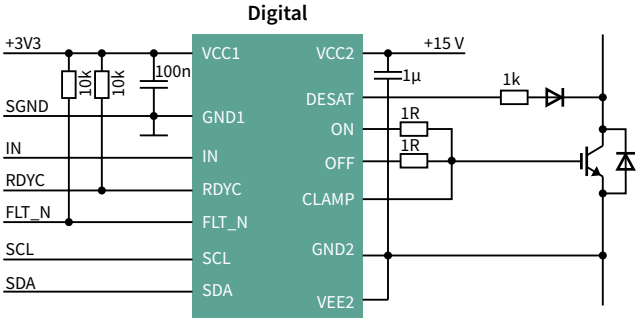

Features and benefits

Key features	Key benefits
› Adjustable DESAT and adjustable soft-off	› Optimized short circuit control for 3-level inverters, best-in-class DESAT accuracy
› High number of configuration capabilities through I2C interface	› Flexible design, predictive maintenance and rapid prototyping
› 200 kV/µs CMTI	› Avoids wrong switching patterns in rugged environments
› Active Miller clamp or clamp driver	› Small space-saving package with large creepage distance (>8 mm)
› Up to 9 A output current, no booster required	› No external filter needed, cost saving and robustness
› Tight IC-to-IC propagation delay matching (30 ns max.)	› Higher dynamic range in PWM modulation and shorter deadtime
› VDE 0884-11 certified reinforced isolation (V_{IORM} = 1.767 kV)	› Suitable for operation at high ambient temperature
› UL 1577 certified (VISO = 5.7 kV_{rms} for 1 min)	› Higher robustness in rugged environments

DESAT protection

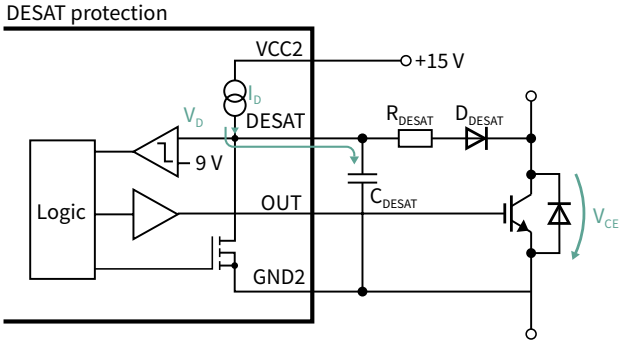

Evaluation board available:

EVAL-1ED3491Mx12M

EVAL-1ED3890Mx12M*

EVAL-1ED38x0DCT*

*Coming soon

Protection

- Reliable short-circuit detection via accurate desaturation
- (DESAT) detection circuits (current source and comparator) protects the power switches from damage during short-circuit condition
- Two-level turn-off (TLTO) for short-circuit current protection to lower collector-emitter voltage overshoot
- Active Miller clamping option protects against parasitic turn-on due to high dV/dt
- Built-in short-circuit clamping limits the gate voltage during short circuit

EiceDRIVER™ 1EDS-SRC

1200 V single-channel, isolated driver family with slew-rate control

The new EiceDRIVER™ slew-rate control (SRC) family serves the latest generation of highly efficient low-EMI electric drive systems with improved efficiency. This is the first high-voltage isolated gate driver on the market with dynamic slew-rate control (SRC), allowing on-the-fly dV/dt control of electric drives through precise gate current control. Hence, it provides the best trade-off between minimum power dissipation and minimum EMI depending on operating conditions.

Simplified application diagram

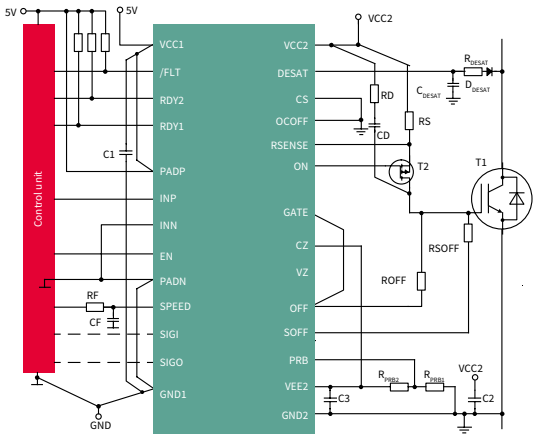

Part Number	Isolation rating
1EDS20I12SV	Isolation according VDE 0884-10 (V_{IORM} = 1420 V) and UL 1577 certified with V_{ISO} = 5 kV (rms) for 1 min
1EDU20I12SV	UL 1577 certified with V_{ISO} = 5 kV (rms) for 1 min
1EDI20I12SV	Functional isolation

Features and benefits

Key features
› Real-time adjustable gate current control
› Desaturation detection
› Overcurrent protection for sense IGBTs and conventional IGBTs
› Soft turn-off shutdown: 1 A pull down to rail
› Two-level turn-off

Key benefits
› Low EMI during low load conditions and high efficiency during high load conditions
› Reduction or elimination of dV/dt filter
› Drive power modules up to 900 A
› Drive 1200 V single-channel IGBT driver
› Unique: NPC1 short circuit protection for three-level inverters

Feature – real-time gate current control

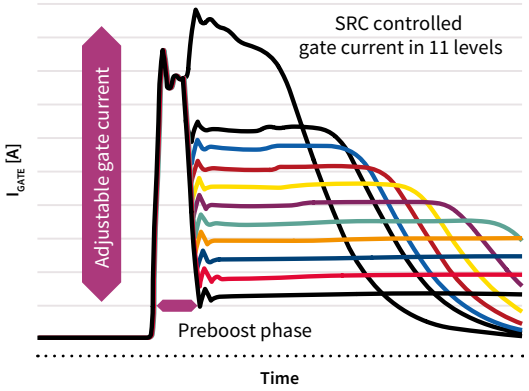

Effect – gate turn-on tunable across a very large dV/dt range:

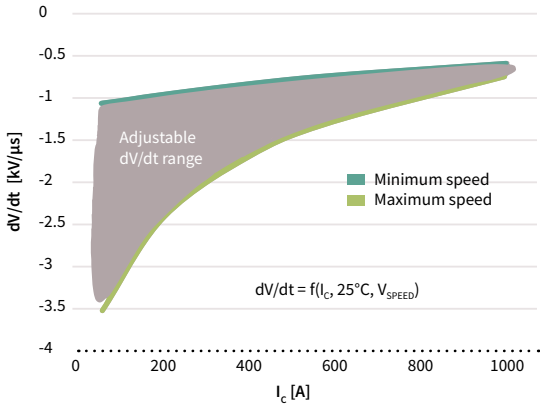

Evaluation board
EVAL-1EDS20I12SV

Key components:
- Isolated gate driver with slew rate control (1EDS20I12SV)
- Suitable for EconoDUAL™ 3 module FF600R12ME4 (module is not delivered with the board)

Order code:
EVAL1EDS20I12SVTOBO2

For more details on the product, click on the part number or contact our product support.

Industrial and general-purpose gate driver ICs

Infineon's gate-driver IC solutions are the expert's choice

With more than 500 reliable and efficient gate-driver solutions, Infineon has a comprehensive offering for virtually any application. Addressing various application requirements, Infineon delivers solutions with an assortment of gate driver topologies, voltage classes, drive capability, features, and package options to optimize performance, minimize size and reduce costs. Some discrete gate-driver ICs are also available in bare die. The table below shows additional gate-driver IC features available in the current portfolio.

Features	Abbreviation	Benefits
Active Miller clamp	M-CLAMP	Protection against inadvertent dynamic turn-on because of parasitic Miller effects
Active shutdown	SD-ACT	Ensures a safe IGBT off-state in case the output chip is not connected to the power supply or an undervoltage lockout is in effect
Brake chopper	BRAKE	Integrated brake IGBT driver with protection
Comparator	CMP	General-purpose comparator included
Current sense	CS	Senses the motor phase current through an external shunt resistor, converts from analog to digital signal, and transfers the signal to the low side
Dedicated JFET control	JFETDRIVE	Optimized to drive SiC JFET
Desaturation protection	DESAT	Protects the IGBT at short circuit
Enable	EN	Dedicated pin terminates all outputs
Fault reporting	FAULT-RPT	Indicates an overcurrent or undervoltage shutdown has occurred
Fault reset	FAULT-RST	Dedicated pin resets the DESAT-FAULT-state of the chip
High-voltage start-up	HVSTART	Provides easy and fast circuit start-up while enabling low circuit standby losses
Integrated bootstrap diode	BSD	Integrated bootstrap reduces BOM
Operational amplifier	OPAMP	An independent op-amp for current measurement or overcurrent detection
Self-oscillating (oscillator)	OSC	Integrated front end oscillator
Overcurrent protection (ITRIP)	OCP	Ensures safe application operation in case of overcurrent
Overtemperature shutdown	SD-OT	Internal overtemperature protection circuit protects the IC against excessive power loss and overheating
Programmable dead time	DT-PROG	Dead time is programmable with external resistor for flexible design
Programmable fault clear time	FLTC	The length of the fault clear time period (tFLTC) is programmed by external capacitor which connected between FLTC and VSS (CFLTC).
Programmable shutdown	SD-PROG	A shutdown feature has been designed into a pin
Separate pin for logic ground	SEP-GND	Dedicated pin or logic ground for improved noise immunity
Separate sink/source outputs	SEP-OUT	Simplifies gate resistor selection, reduces BOM, and improves dV/dt control
Shoot-through protection	STP	Additional shoot-through protection logic such as interlock
Short-circuit clamping	SC-CLAMP	During short circuit the IGBT's gate voltage tends to rise because of the feedback via the Miller capacitance. An additional protection circuit connected to OUT+ limits this voltage to a value slightly higher than the supply voltage.
Shutdown	SD	Dedicated pin disables the IC outputs
Soft overcurrent shutdown	SD-SOFT	Dedicated pin turns off the desaturated transistor, preventing overvoltages
Truly differential inputs	TDI	±70 VDC and ±150 VAC ground-shift robustness of low-side gate driver ICs
Two-level turn-off	TLTO	Lowers VCE overshoots at turn-off during short circuits or overcurrent events
UL 1577	UL	Double galvanic isolation certification
Undervoltage lockout	UVLO	Ensures safe application operation by avoiding unexpected driver behavior at low voltages
VDE 0884-10 or VDE 0884-11	VDE	Reinforced galvanic isolation certifications for non-optical couplers

Infineon's industrial and general purpose gate-driver ICs utilize the following technologies:

- (1) Coreless transformer technology (CT)
- (2) Level-shifting silicon-on-insulator technology (SOI)
- (3) Level-shifting junction-isolation technology (JI)
- (4) Non-isolated technology (N-ISO)

Infineon gate-driver IC technologies

Non-isolated	Level-shift		Isolated
Low-side	Junction isolation (JI)	Silicon on insulator (SOI)	Coreless transformer
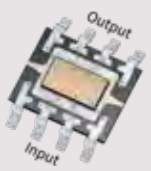	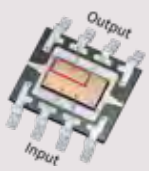	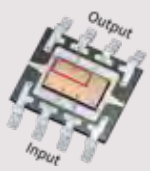	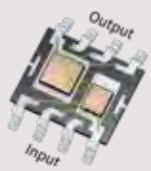
› **Comprehensive Families** of single- and dual-low-side drivers with flexible options for output current, logic configurations and UVLOs (plus non-isolated TDI) › **Rugged technology** of the high-voltage gate drivers, and on the latest state-of-the-art 130-nm process › **Industry-standard** DSO-8 and small form-factor SOT23, WSON and TSNP packages	› **Proven technology** trustfully used in all high-voltage gate drive applications for over 20 years › **Largest portfolio** of 120 V, 200 V, 600 V, and 1200 V industry standard gate drivers using rugged proprietary HVIC process › **Solution-specific** motor-control and switch-mode power applications	› **Infineon SOI technology** for high-voltage applications with **inherent integrated boot-strap diode** capability and lower level-shift losses › Industry **best-in-class robustness against negative VS transient** spikes › Higher level of integration reduces BOM and total system cost	› **Magnetically-coupled isolation technology** provides galvanic isolation for industrial applications › **Strongest gate-drive output currents** (up to 14 A) reducing need for external booster circuits › **Reliable and accurate protection** precise & fast on-/off-switching, desat protection, active Miller clamp, isolation rating in different packages, VDE 0884-11 certification

For more details on the product, click on the part number or contact details on the product, click on the part number.

Applications
20-300 V MOSFETs
500-950 V MOSFETs
WBG semiconductors
Discrete IGBTs and silicon power diodes
Power ICs
Intelligent switches and input ICs
Gate-driver ICs
Microcontrollers
XENSIV™ sensors
Packages

Product overview

To ease the selection process, this overview is structured along the configurations of the gate-driver ICs, as opposed to by application topology.

Half-bridge gate-driver ICs

Typical connection

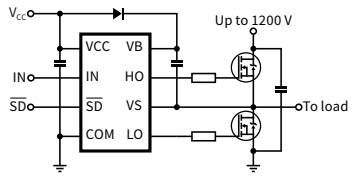

Voltage class [V]	I_{O+}/I_{O-} typ. [mA]	UVLO on/off typ. [V]	Prop delay off/on typ. [ns]	Base PN	Technology	Comparator	Operational amplifier	Desaturation protection	Enable	Fault reporting	Integrated bootstrap diode	Over-current protection	Programmable dead time	Programmable shutdown	Self-oscillating (oscillator)	Separate pin for logic ground	Shoot-through protection	Shutdown	Soft over-current shutdown	DSO-8	DSO-14	DSO-16	DSO-16 WB	DSO-18	DIP-8	DIP-14	SSOP-24	VDSON-8	VQFN-14	CHIP
						Features														Package										
1200	1500/2500	12.2/11.2	85/85	2ED020I12-FI	CT	✓	✓										✓	✓						✓						
	2000/3000	10.2/9.3	440/440	IR2214SS	JI			✓		✓						✓	✓		✓								✓			
650	2500/2500	9.1/8.2	200/200	2ED2182S06F NEW	SOI						✓						✓			✓										
				2ED21824S06J NEW	SOI						✓		✓			✓	✓				✓									
				2ED2183S06F NEW	SOI						✓						✓			✓										
				2ED21834S06J NEW	SOI						✓		✓			✓	✓				✓									
				2ED2184S06F NEW	SOI						✓						✓	✓		✓										
				2ED21844S06J NEW	SOI						✓		✓			✓	✓	✓			✓									
	290/700			2ED2108S06F NEW	SOI						✓						✓			✓										
				2ED21084S06J NEW	SOI						✓		✓			✓	✓				✓									
				2ED2109S06F NEW	SOI						✓						✓	✓		✓										
				2ED21094S06J NEW	SOI						✓		✓			✓	✓	✓			✓									
				2ED21091S06F NEW	SOI						✓		✓				✓	✓		✓										
	360 / 700	9.1 / 8.3	300/310	2ED2304S06F	SOI						✓						✓			✓										
	1500/2500	12.2/11.2	85/85	2ED020I06-FI	CT											✓	✓	✓						✓						
	20/80	8.9/7.7	530/530	2ED28073J06 NEW	JI						✓						✓			✓										
	290/600	8.9/8	90/90	2ED2103S06F NEW	SOI						✓						✓			✓										
				2ED2104S06F NEW	SOI						✓						✓	✓		✓										
600	78/169	8.9/8.2	220/220	IR2304	JI												✓			✓					✓					
		8.9/8.2		IR25601S	JI												✓			✓										
	180/260	9/8	N.A.	IR21531	JI									✓	✓		✓	✓		✓					✓					✓
		9/8		IR21531D	JI						✓			✓	✓		✓	✓							✓					
		9/8		IR25603	JI									✓	✓		✓	✓		✓					✓					
		11/9		IRS2153D, IRS21531D	JI						✓			✓	✓		✓	✓		✓					✓					✓
	200/350	8.9/8.2	200/220	IR2108	JI												✓			✓					✓					
				IR21084	JI								✓			✓	✓				✓					✓				
				IR2308	JI												✓			✓					✓					
				IR25606S	JI												✓			✓										
			200/750	IR2109	JI												✓	✓		✓					✓					
				IR21091	JI								✓				✓	✓		✓										
				IR21094	JI								✓			✓	✓	✓			✓					✓				
		4.1/3.8		IR2302	JI												✓	✓		✓					✓					
	210/360	8.9/8.2	150/680	IR2103	JI												✓			✓					✓					
		8.9/8.2		IR2104	JI												✓	✓		✓					✓					
		8.9/8.2		IR25602S	JI												✓	✓		✓										
	220/480	8.9/7.7	500/500	IRS2890DS	JI					✓	✓	✓					✓				✓									
	250/500	8.6/8.2	150/750	IR2111	JI												✓			✓					✓					
	290/600	8.9/8.2	150/150	IRS2304	JI												✓			✓					✓					
		8.9/8.2	150/680	IRS2103	JI												✓			✓					✓					
		8.9/8.2		IRS2104	JI												✓	✓		✓					✓					
		8.6/8.2	150/750	IRS2111	JI												✓			✓					✓					
		8.9/8.2	200/220	IRS2108, IRS2308	JI												✓			✓					✓					
		8.9/8.2		IRS21084	JI								✓			✓	✓				✓					✓				
		8.9/8.2	200/750	IRS2109	JI												✓	✓		✓					✓					
		8.9/8.2		IRS21091	JI								✓				✓			✓					✓					
		8.9/8.2		IRS21094	JI								✓			✓	✓	✓			✓					✓				
	360/700	9.1/8.3	300/310	2EDL05N06PF, 2EDL05N06PJ	SOI						✓						✓			✓	✓									
		12.5/11.6	400/420	2EDL05I06PF, 2EDL05I06PJ	SOI						✓						✓			✓	✓									
	1900/2300	8.9/8.2	220/180	IRS2183	JI												✓			✓					✓					
		8.9/8.2		IR2183	JI												✓			✓					✓					
		8.9/8.2		IRS21834, IR21834	JI								✓			✓	✓				✓					✓				
		8.9/8.2	270/680	IRS2184	JI												✓	✓		✓					✓					
		8.9/8.2		IR2184	JI												✓	✓		✓					✓					
		8.9/8.2		IR21844	JI								✓			✓	✓	✓			✓					✓				
		8.9/8.2		IRS21844	JI								✓			✓	✓	✓			✓					✓			✓	
	2000/3000	10.2/9.3	440/440	IR2114SS	JI			✓		✓						✓	✓		✓								✓			
	2300/2800	9.1/8.3	300/310	2EDL23N06PJ	SOI				✓	✓	✓	✓				✓	✓				✓									
		12.5/11.6	400/420	2EDL23I06P	SOI				✓	✓	✓	✓				✓	✓				✓									
200	290/600	8.9/8.2	150/160	IRS2007M, IRS2007S	JI												✓			✓									✓	
			150/680	IRS2008M, IRS2008S	JI												✓	✓		✓									✓	
120	2000/6000	7/6.5	47/47	2ELD8012G	JI						✓																	✓		
	2000/6000			2EDL8112G	JI						✓						✓											✓		
	4000/6000			2EDL8024G	JI						✓																	✓		
	4000/6000			2EDL8124G	JI						✓						✓											✓		
	3000/6000			2EDL8023G	JI						✓																	✓		
	3000/6000			2EDL8123G	JI						✓						✓											✓		

For more details on the product, click on the part number or contact our product support.

For more details on the product, click on the part number.

High-side and low-side gate-driver IC

Typical connection

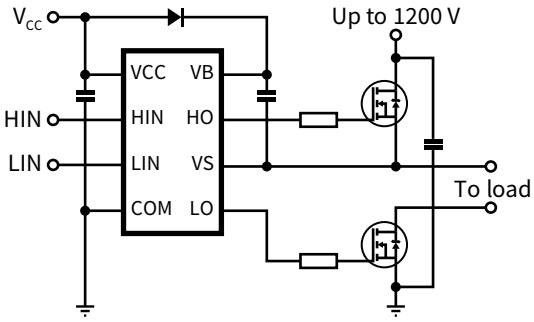

Voltage class [V]	I_{O+}/I_{O-} typ. [mA]	UVLO on/off typ. [V]	Prop delay off/on typ. [ns]	Base PN		Technology	Features: Integrated bootstrap diode	Features: Separate pin for logic ground	Features: Shutdown	Package: DSO-8	Package: DSO-14	Package: DSO-16 WB	Package: DIP-8	Package: DIP-14	Package: VQFN-14	Package: CHIP
1200	2000/2500	10.2/9.3	225/280	IR2213		JI		✓	✓			✓		✓		✓
650	290/700	9.1/8.2	200/200	2ED2106S06F	NEW	SOI	✓			✓						
				2ED21064S06J	NEW	SOI	✓				✓					
	2500/2500			2ED2181S06	NEW	SOI	✓			✓						
				2ED21814S06J	NEW	SOI	✓				✓					
	290/600	8.9/8	90/90	2ED2101S06	NEW	SOI	✓			✓						
	2500/2500			2ED2110S06	NEW	SOI	✓	✓	✓			✓				
600	200/350	8.9/8.2	200/220	IR2106		JI				✓			✓			
		8.9/8.2		IR21064		JI		✓			✓					
		4.1/3.8		IR2301		JI				✓			✓			
		8.9/8.2		IR25604S		JI				✓						
		4.1/3.8		IR25607S		JI				✓						
	210/360	8.9/8.2	150/160	IR2101		JI				✓			✓			
				IR2102		JI				✓			✓			
	250/500	8.6/8.2	105/125	IR2112		JI			✓			✓		✓		
	290/600	8.6/8.2	130/135	IRS2112		JI		✓	✓			✓		✓		
		8.9/8.2	150/160	IRS2101		JI				✓			✓			
		8.9/8.2	200/220	IRS2106		JI				✓			✓			
		8.9/8.2		IRS21064		JI		✓			✓			✓		
	360/700	12.5/11.6	400/420	2EDL05I06BF		SOI	✓			✓						
	1900/2300	8.9/8.2	220/180	IRS2181		JI				✓			✓			
		8.9/8.2		IR2181		JI				✓			✓			
		8.9/8.2		IR21814		JI		✓			✓					
		8.9/8.2		IRS21814		JI		✓			✓			✓	✓	
	2500/2500	8.6/8.2	94/120	IR2113		JI		✓	✓			✓		✓		
		8.6/8.2		IR25607S		JI		✓	✓			✓				
		8.5/8.2	120/130	IRS2113		JI		✓	✓			✓		✓	✓	
	4000/4000	8.9/8.2	170/170	IRS2186		JI				✓			✓			
		8.9/8.2		IRS21864		JI		✓			✓			✓		
		6/5.5		IRS21867S		JI				✓						
500	2500/2500	8.6/8.2	94/120	IR2110		JI		✓	✓			✓		✓		
		8.5/8.2	120/130	IRS2110		JI		✓	✓			✓		✓		✓
200	290/600	8.9/8.2	150/160	IRS2005S, IRS2005M		JI				✓					✓	
	1000/1000	9/8.2	60/60	IRS2011		JI				✓			✓			
		9/8.2	75/80	IR2011		JI				✓			✓			
	3000/3000	8.6/8.2	65/95	IR2010		JI		✓	✓			✓		✓		

For more details on the product, click on the part number or contact our product support.

Three-phase gate-driver ICs

Aircon | Home Appliance | Induction | Drives | Motor control | Power Tools | Solar | Telecom

Typical connection

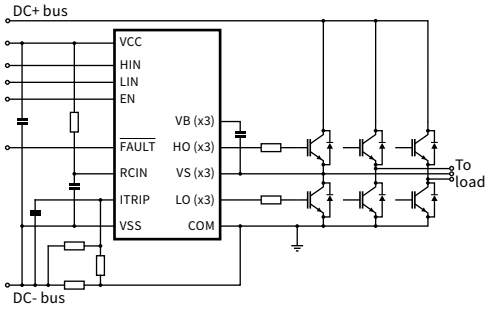

Voltage class [V]	I_{O+}/I_{O-} typ. [mA]	UVLO on/off typ. [V]	Prop delay off/on typ. [ns]	Base PN	Technology	Features: Brake chopper	Operaltional amplifier	Desaturation protection	Enable	Fault reporting	Integrated bootstrap diode	Over-current protection	Programmable dead time	Separate pin for logic ground	Shoot-through protection	Shutdown	Package: DSO-20 WB	DSO-24	DSO-28 WB	DIP-28	LCC-32	MQFP-64	TSSOP-28	VQFN-28	VQFN-34	CHIP
1200	350/650	11.4/10.4	600/600	6ED2230S12T	SOI				✓	✓	✓	✓	✓		✓			✓								
	250/500	8.6/8.2	700/750	IR2233	JI		✓			✓		✓		✓		✓			✓	✓	✓					
		10.4/9.4		IR2235	JI		✓			✓		✓		✓		✓			✓		✓					
	350/540	11.2/10.2	550/550	IR2238Q	JI	✓		✓		✓		✓		✓		✓						✓				
600	165/375	11.7/9.8	490/530	6ED003L06-F2	SOI				✓	✓		✓		✓					✓							✓
		11.7/9.8		6EDL04I06NT, 6EDL04I06PT	SOI				✓	✓	✓	✓		✓					✓							✓
		9/8.1	530/530	6EDL04N06PT	SOI				✓	✓	✓	✓		✓					✓							✓
	200/350	8.9/8.2	400/425	IR2136	JI				✓	✓		✓		✓					✓	✓	✓					
		11.1/10.9		IR21363J, IR21363S	JI				✓	✓		✓		✓					✓		✓					
		10.4/9.4	530/500	IR21364S	JI				✓	✓		✓		✓					✓							
		11.1/10.9	530/530	IRS2334M, IRS2334S	JI												✓							✓		
		8.9/8.2		IRS2336S	JI				✓	✓		✓		✓					✓		✓					
		8.9/8.2		IRS2336DJ, IRS2336DM, IRS2336DS	JI				✓	✓	✓	✓		✓					✓		✓			✓		
		8.9/8.2		IRS23364DJ, IRS23364DS	JI				✓	✓	✓	✓		✓					✓		✓					
		8.9/8.2		IRS23365DM	JI				✓	✓	✓	✓		✓											✓	
	250/500	9/8.7	425/675	IR2130, IR2132	JI		✓			✓		✓		✓					✓	✓	✓					
		8.7/8.3	600/1300	IR2131	JI					✓		✓		✓		✓			✓	✓	✓					
		8.6/8.2	700/750	IR2133	JI		✓			✓		✓		✓		✓			✓	✓	✓					
		10.4/9.4		IR2135J, IR2135S	JI		✓			✓		✓		✓		✓			✓		✓					
200	165/375	11.7/9.8	490/530	6ED003L02-F2	SOI				✓	✓		✓		✓									✓			
		9/8.1	530/530	6EDL04N02PR	SOI				✓	✓	✓	✓		✓									✓			

For more details on the product, click on the part number or contact our product support.

Single high-side gate-driver ICs

Typical connection

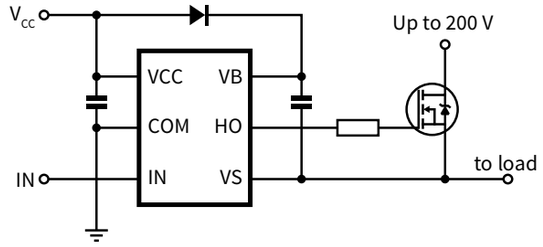

Voltage class [V]	I_{O+}/I_{O-} typ. [mA]	UVLO on/off typ. [V]	Prop delay off/on typ. [ns]	Base PN		Technology	Active Miller clamp	Analog configurability (Desat, soft-off)	Digital I2C configurability (16 parameters)	Desaturation protection	Enable	Fault reporting	Fault reset	Over-current protection	Separate pin for logic ground	Separate sink/source outputs	Soft over-current shutdown	Slew rate control	Two-level turn-off	UL 1577	VDE 0884-11 or -10	DSO-8	DSO-8 300 mil	DSO-16 fine pitch 300 mil	DSO-16	DSO-16 WB	DSO-19	DSO-36	DIP-8	SOT23-6	TFLGA-13
							Features															Package									
2300	3800/2500	12/11	236/244	1ED3431MU12M	NEW	CT	✓	✓		✓		✓	✓		✓	✓	✓			✓				✓							
				1ED3431MC12M	NEW	CT	✓	✓		✓		✓	✓		✓	✓	✓			✓	✓			✓							
				1ED3830MU12M	NEW	CT	✓		✓	✓		✓	✓		✓	✓	✓		✓	✓				✓							
				1ED3830MC12M	NEW	CT	✓		✓	✓		✓	✓		✓	✓	✓		✓	✓	✓			✓							
	5500/5500	10/8	90/90	1ED3120MU12H	NEW	CT									✓	✓				✓			✓								
				1ED3120MC12H	NEW	CT									✓	✓				✓	✓		✓								
		12.5/10.5		1ED3121MU12H	NEW	CT									✓	✓				✓			✓								
				1ED3121MC12H	NEW	CT									✓	✓				✓	✓		✓								
			270/270	1ED3131MU12H	NEW	CT									✓	✓				✓			✓								
				1ED3131MC12H	NEW	CT									✓	✓				✓	✓		✓								
	7500/5000	12/11	236/244	1ED3461MU12M	NEW	CT	✓	✓		✓		✓	✓		✓	✓	✓			✓				✓							
				1ED3461MC12M	NEW	CT	✓	✓		✓		✓	✓		✓	✓	✓			✓	✓			✓							
				1ED3860MU12M	NEW	CT	✓		✓	✓		✓	✓		✓	✓	✓		✓	✓				✓							
				1ED3860MC12M	NEW	CT	✓		✓	✓		✓	✓		✓	✓	✓		✓	✓	✓			✓							
	10000/9000	10/8	90/90	1ED3122MU12H	NEW	CT	✓								✓					✓			✓								
				1ED3122MC12H	NEW	CT	✓								✓					✓	✓		✓								
		12.5/10.5		1ED3125MU12F	NEW	CT	✓								✓							✓									
	11000/7500	12/11	236/244	1ED3491MU12M	NEW	CT	✓	✓		✓		✓	✓		✓	✓	✓			✓				✓							
				1ED3491MC12M	NEW	CT	✓	✓		✓		✓	✓		✓	✓	✓			✓	✓			✓							
				1ED3890MU12M	NEW	CT	✓		✓	✓		✓	✓		✓	✓	✓		✓	✓				✓							
				1ED3890MC12M	NEW	CT	✓		✓	✓		✓	✓		✓	✓	✓		✓	✓	✓			✓							
	13500/14000	10/8	90/90	1ED3123MU12H	NEW	CT									✓	✓				✓			✓								
				1ED3123MC12H	NEW	CT									✓	✓				✓	✓		✓								
		12.5/10.5		1ED3124MU12H	NEW	CT									✓	✓				✓			✓								
				1ED3124MC12H	NEW	CT									✓	✓				✓	✓		✓								
				1ED3124MU12F	NEW	CT									✓	✓				✓		✓									
	10000/10000	12.5/10.5	90/90	1ED3240MC12H		CT									✓	✓		✓		✓			✓								
				1ED3250MC12H		CT	✓								✓			✓		✓	✓		✓								
	18000/18000			1ED3241MC12H		CT									✓	✓		✓		✓			✓								
				1ED3251MC12H		CT	✓								✓			✓		✓	✓		✓								
1200	1300/900	12/11.1	300/300	1EDI05I12AF, 1EDI05I12AH		CT									✓	✓						✓	✓								
				1EDC05I12AH		CT									✓	✓				✓			✓								
	2000/2000	12/11	165/170	1ED020I12-F2		CT	✓			✓		✓	✓		✓										✓						
				1ED020I12-B2		CT	✓			✓		✓	✓		✓					✓	✓				✓						
			1750/1750	1ED020I12-FT		CT	✓			✓		✓	✓		✓				✓						✓						
				1ED020I12-BT		CT	✓			✓		✓	✓		✓				✓	✓	✓				✓						
	2200/2300	12/11.1	300/300	1EDI10I12MF, 1EDI10I12MH		CT	✓								✓							✓	✓								
				1EDC10I12MH		CT	✓								✓					✓			✓								
	4000/3500	9.1/8.5	120/115	1EDI20N12AF		CT									✓	✓						✓									
		12/11.1	125/120	1EDI20H12AH		CT									✓	✓							✓								
				1EDC20H12AH		CT									✓	✓				✓			✓								
			300/300	1EDI20I12AF, 1EDI20I12AH		CT									✓	✓						✓	✓								
				1EDC20I12AH		CT									✓	✓				✓			✓								
	4400/4100			1EDI20I12MH, 1EDI20I12MF		CT	✓								✓							✓	✓								
				1EDC20I12MH		CT	✓								✓					✓			✓								
	5900/6200	12/11.1	300/300	1EDI30I12MF, 1EDI30I12MH		CT	✓								✓							✓	✓								
				1EDC30I12MH		CT	✓								✓					✓			✓								
	7500/6800			1EDI40I12AH, 1EDI40I12AF		CT									✓	✓						✓	✓								
				1EDC40I12AH		CT									✓	✓				✓			✓								
	SRC/2000	11.9/11	460/460	1EDI20I12SV		CT				✓	✓	✓		✓	✓		✓	✓	✓									✓			
	SRC/2000	11.9/11	460/460	1EDU20I12SV		CT				✓	✓	✓		✓	✓		✓	✓	✓	✓								✓			
	SRC/2000	11.9/11	460/460	1EDS20I12SV		CT				✓	✓	✓		✓	✓		✓	✓	✓	✓	✓							✓			
	10000/9400	12/11.1	125/120	1EDI60H12AH		CT									✓	✓						✓	✓								
				1EDC60H12AH		CT									✓	✓				✓											
			300/300	1EDI60I12AF, 1EDI60I12AH		CT									✓	✓						✓	✓								
				1EDC60I12AH		CT									✓	✓				✓			✓								
600	160/240	9/8	215/140	IRS25752L		JI																								✓	
	250/500	8.6/8.2	105/125	IR2117		JI																✓							✓		
				IR2118		JI																✓							✓		
		10.3/9	150/200	IR2127, IR2128		JI						✓		✓								✓							✓		
		7.2/6.8		IR21271		JI						✓		✓								✓							✓		
	290/600	8.6/8.2	105/125	IRS2117, IRS2118		JI																✓							✓		
		10.3/9	150/150	IRS2127		JI						✓		✓								✓							✓		
		7.2/6.8		IRS21271		JI						✓		✓								✓							✓		
500	1600/3300	9.2/8.3	200/170	IR2125		JI						✓		✓											✓				✓		
200	160/240	9/8	215/140	IRS20752L		JI																								✓	
100				IRS10752L		JI																								✓	
650	4000/8000	4.5/5.0	41/37	1EDS5663H		CT														✓	✓				✓						
	4000/8000	4.5/5.0	41/37	1EDF5673F		CT																		✓							
250	4000/8000	4.5/5.0	41/37	1EDF5673K		CT																									✓

SRC=Turn on slew rate control

For more details on the product, click on the part number or contact our product support.

Dual high-side/half-bridge gate-driver ICs

Typical connection

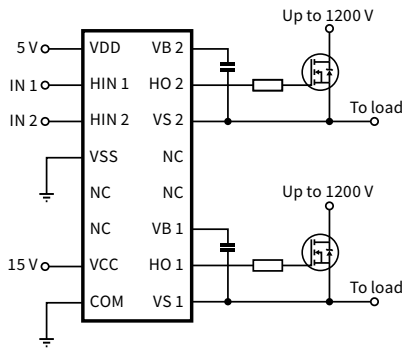

Voltage class [V]	I_{O+}/I_{O-} typ. [mA]	UVLO on/off typ. [V]	Prop delay off/on typ. [ns]	Base PN	Technology	Active Miller clamp	Deadtime control	Desaturation protection	Disable	Fault reporting	Fault reset	Separate pin for logic ground	UL 1577	VDE 0884-10	DSO-16	DSO-16 WB	DSO-36 (w/o 4 pins)	TFLGA-13
						Features									Package			
1200	2000/2000	12/11	165/170	2ED020I12-F2	CT	✓		✓		✓	✓	✓					✓	
650	4000/8000	4.2/3.9	37 / 37	2EDF7275F	CT				✓						✓			
	1000/2000			2EDF7175F	CT				✓						✓			
	4000/8000	8/7		2EDS8265H	CT				✓				✓	✓		✓		
	1000/2000			2EDS8165H	CT				✓				✓	✓		✓		
250	4000/8000	4.2/3.9		2EDF7235K	CT				✓									✓
				2EDF7275K	CT		✓		✓									✓

Single low-side gate-driver ICs

Typical connection

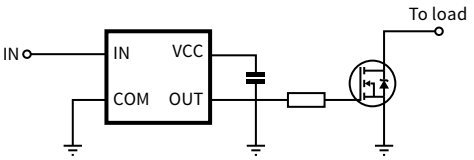

Voltage class [V]	I_{O+}/I_{O-} typ. [mA]	UVLO on/off typ. [V]	Prop delay off/on typ. [ns]	Base PN	Technology	Automatic minimum on time protection	Enable	Fault reporting	Over-current protection	Programmable fault clear time	Programmable minimum on time	Separate sink/source outputs	Synchronous rectification	Truly differential inputs	DSO-8	DIP-8	SOT23-5	SOT23-6	WSON-6
						Features									Package				
200	1000/4000	10.55/9	50/60	IR11662	N-ISO	✓	✓				✓		✓		✓				
	2000/7000	10.55/9	50/60	IR11672A	N-ISO	✓	✓				✓		✓		✓				
	1000/2500	4.5/4.4	50/50	IR1161L	N-ISO	✓					✓		✓				✓		
80	4000/8000	4.2/3.9	45 / 45	1EDN7550 NEW	N-ISO									✓				✓	
		8/7	45 / 45	1EDN8550 NEW	N-ISO									✓				✓	
25	2600/2600	8/7.3	34/34	1ED44173N01B NEW	N-ISO		✓	✓	✓	✓								✓	
		11.9/11.4	50/50	1ED44175N01B NEW	N-ISO		✓	✓	✓	✓								✓	
	800/1750	11.9/11.4	50/50	1ED44176N01F NEW	N-ISO		✓	✓	✓	✓					✓				
	1500/1500	10.2/9.2	50/50	IRS44273L	N-ISO												✓		
20	4000/8000	4.2/3.9	19/19	1EDN7511B	N-ISO													✓	
		8/7		1EDN8511	N-ISO													✓	
		4.2/3.9		1EDN7512B, 1EDN7512G	N-ISO												✓		✓
5	1600/3300	8.9/8	200/150	IR2121	N-ISO			✓	✓							✓			

For more details on the product, click on the part number or contact our product support.

Dual low-side gate-driver ICs

Typical connection

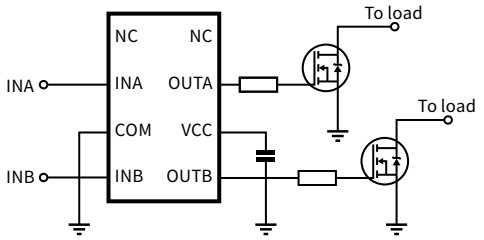

Voltage class [V]	I_{O+}/I_{O-} typ. [mA]	UVLO on/off typ. [V]	Prop delay off/on typ. [ns]	Base PN	Technology	Features: Automatic minimum on time protection	Features: Enable	Features: Programmable minimum on time	Features: Synchronous rectification	Package: DSO-8	Package: DSO-8 (with power pad)	Package: DIP-8	Package: WSON-8	Package: TSSOP-8
200	1000/4000	8.1/7.6	70/60	IR1168	N-ISO	✓			✓	✓				
	1000/4000	8.1/7.6	80/100	IR11682	N-ISO	✓			✓	✓				
	1000/4000	4.55/4.35	60/250	IR11688S	N-ISO	✓		✓	✓	✓				
25	2300/3300	10.2/9.2	50/50	IRS44262S	N-ISO					✓				
		N.A.		IRS4426S	N-ISO					✓				
				IRS4427	N-ISO					✓		✓		
			65/85	IR25600	N-ISO					✓				
				IR4426, IR4427	N-ISO					✓		✓		
24	1000/1000	11.5/10	55/55	2ED24427N01F NEW	N-ISO		✓				✓			
20	5000/5000	4.2/3.9	19/19	2EDN7523, 2EDN7524	N-ISO		✓			✓			✓	✓
		8/7		2EDN8523F, 2EDN8523R, 2EDN8524F, 2EDN8524R	N-ISO		✓			✓				✓
	4000/4000	4.2/3.9	19/19	2EDN7424R, 2EDN7424F	N-ISO		✓			✓				✓

Full-bridge gate-driver ICs

Typical connection

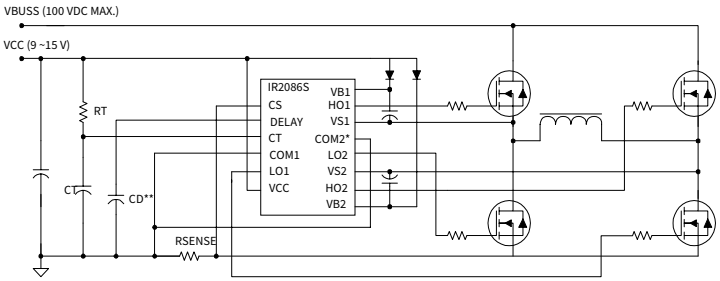

*COM2 must be shorted to COM1 for proper operation
**CD is optional

Voltage class [V]	I_{O+}/I_{O-} typ. [mA]	UVLO on/off typ. [V]	Prop delay off/on typ. [ns]	Base PN	Technology	Features: Integrated bootstrap diode	Features: Shoot-through protection	Features: Shutdown	Features: Overcurrent protection	Features: Programmable dead time	Features: Self-oscillating (oscillator)	Package: DSO-14	Package: DSO-16	Package: DIP-14
100	1200/1200	7.25/6.8	40/60	IR2086S	JI				✓	✓	✓		✓	
600	180/260	11/9	N.A.	IRS24531DS	JI	✓	✓	✓				✓		
				IRS2453D	JI	✓	✓	✓				✓		✓

For more details on the product, click on the part number or contact our product support.

Complementary: current sense ICs

Typical connection

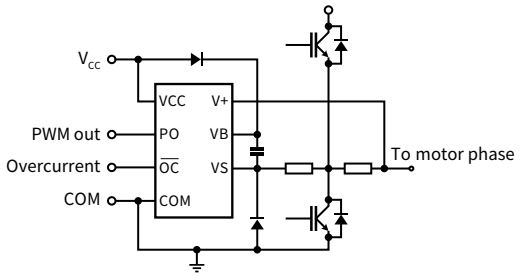

Voltage class [V]	Base PN	Technology	Features: Current sense	Features: Overcurrent protection	Package: DSO-8	Package: DSO-16 WB	Package: DIP-8	Package: SOT23-5
600	IR2175	JI	✓	✓	✓		✓	

Complementary: high-voltage start-up IC

Typical connection

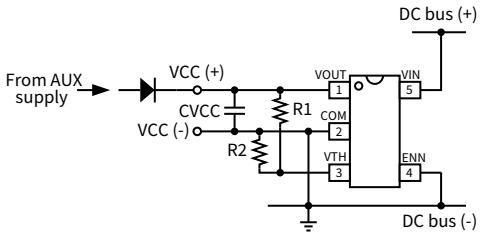

Voltage class [V]	Base PN	Technology	Features: Enable	Features: High voltage start-up	Features: Overtemperature shutdown	Package: SOT23-5
480	IRS25751	N-ISO	✓	✓	✓	✓

For more details on the product, click on the part number or contact our product support.

Nomenclature

Naming convention for existing families of gate-driver ICs

AU IR 21 10 D S

Automotive rating

Technology generation
IR = Gen2 high-voltage driver IC
IRS = Gen5 high-voltage driver IC

Voltage class
20 = 200 V
21 = 600 V
22 = 1200 V
23 = 600 V
26 = 600 V feature adder
44 = low-side driver

Driver type
3 = 3-phase driver
7 = current-sense IC
Other: half-bridge, high-side/low-side, etc.

Package type
S = SOIC
J = PLCC44
M = MLPQ
Q = MFQP
L = SOT-23
B/F = die part
Blank: PDIP

Additional features
D = bootstrap
Blank = without bootstrap

1ED I 60 I 12 A F

Number of channels
1 = 1-ch EiceDRIVER™
2 = 2-ch (half-bridge) EiceDRIVER™
6 = 6-ch (3-phase) EiceDRIVER™

Isolation technology
S = reinforced galvanic isolation
B = basic galvanic isolation
I = functional galvanic isolation
C = UL certified functional galvanic isolation
L = level-shifting (SOI)
N = non-isolated driver

Minimum drive strength
in hundreds of milliamps

Optimal switch Type
H = high-speed IGBT
I = IGBT
J= JFET
N = MOSFET

Package type
F = DSO8-150 mil
H = DSO8-300 mil

Key features
A = separate sink/source
B = Bootstrap diode
D = DESAT
M = active Miller clamp
S = Slew rate control
T = two-level turn-off

Voltage class
06 = 600 V
12 = 1200 V

Naming convention for existing and upcoming families of gate-driver ICs

2 ED 2304 S[x] 06 F

Number of channels
1 = 1-ch
2 = 2-ch
(half-bridge, hi/low)
6 = 6-ch (3-phase)

ED = EiceDRIVER™

Product number/voltage
Flexible

Technology indicator
M = Coreless transformer (inductive)
N = Non-isolated driver (low-side drivers)
J = Junction level shifting (non-SOI)
S = Infineon SOI

[x] Optional
C = Isolation-certified
S = Reinforced isolation
B = Basic Isolation
U/C = UL 1577-certified

Voltage class
01 = <200 V
02 = 200 V
06 = 600 V/650 V
07 = 700 V
12 = 1200 V
16 = 1600 V
17 = 1700 V

Package type
F = DSO8-150 mil
H = DSO8-300 mil
B = SOT23
C = Bare die single chip
J = SO14-150 mil
M = SO16-300 mil
P = SO20-300 mil
R = TSSOP28-140 mil
T = SO28-300 mil
V = SO36-300 mil

2 ED N 7 52 4 F

Number of channels

ED = EiceDRIVER™

Isolation class
N = non-isolated
F = functional isolation
B = basic isolation
S = reinforced isolation
"i" used to designate any type of galvanic isolation

UVLO threshold
6 = reserved
7 = ~ 4.2 V
8 = ~ 8 V
9 = reserved

Family ID
xx = 2 digits

Control Inputs
3 = inverted
4 = non-inverted
5 = mixed
6 = differential

Package
F = DSO 150 mil, 1.27 mm
H = DSO 300 mil, 1.27 mm
B = SOT-23
G = VDSON
R = TSSOP ("mini DSO-8")
K = LGA

Gate driver selection tool

To simplify the gate driver selection process, Infineon offers an online easy-to-use gate driver selection tool. By selecting a few key parameters, the tool quickly guides you in finding the right driver for your application.

Click to access the gate driver selection tool

For recommended gate drivers by application, visit infineon.com/gdapplication to download the PDF version of the gate driver application matrix.

Home Appliances

Discover the next level of power and efficiency

Infineon's gate driver ICs utilize level-shift silicon-on-insulator technology (SOI), and level-shift junction isolation technology (JI) to meet the high performance requirements in home appliance applications.

Recommended Gate Drivers

Home Appliances	General	Air Conditioner (Residential)	Commercial Lighting	Electric Tools (Battery)	Hood Fan/ Ceiling Fan/ Freezer Fan	Power Tools (AC)	Refrigerator/ Washer/ Dryer	Vacuum Cleaner
PFC	IRS4427S IRS4427L 2EDN8524F		IRS4427S 2EDN8524F 1EDN8511B				IRS4427S IRS4427S 2EDN8524F	
SMPS	ICE5QR4770AZ (CoolSET™)	2EDN8524F IRS4427S IRS2153(1)D						
DC-DC	1EDI20N12AF							
Inverter (<1 kW)		6EDL04I06PT IR2136S IRS2890DS 2ED2304S06F		6EDL04N02PR IRS2007S IRS2301S	6EDL04I06PT IR2136S 2ED2304S06F	6EDL04I06PT IR2136S 2EDL05I06PF	6EDL04I06PT IRS2890DS 2ED2304S06F	
Inverter (<3 kW)						IR2235 2EDL23I06PJ IR22145S		
SR Motor Inverter								2EDL05I06PF IRS2181(4) IRS2890DS
Half-bridge Topology			2EDL05N06PF 2ED2304S06F IRS2153(1)D					
HS-Buck			IRS2117 IRS2752L IRS20752L					
Sync-Buck			2EDL05N06PF 2ED2304S06F					

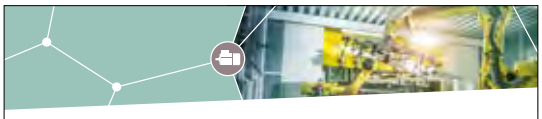

Industrial

Reliable, high quality solutions for the most rugged situations

Infineon's gate driver ICs are the expert's choice. With the breadth and depth of the portfolio, customers can quickly design and build efficient and robust systems for every industrial application.

Recommended Gate Drivers

Industrial	Air Conditioner (Commercial)	Automatic Door Opening Systems	Building Fans & Pumps	Commercial Sewing Machine	Drives	Forklift Truck/ CAV	UPS
Compressor/ Fan/CAC	1ED020I12-F2 1ED10I12MF 2ED020I13-F2						
Inverter (<5 kW)		6EDL04I06PT IR2136S IRS2103	6EDL04I)_N,06PT 2EDL23I06PJ IR22145S	6EDL04I06PT IR2136S IRS2334	6EDL04I06PT IR2133 2EDL23I06PJ		1EDI60I12AF 2EDL23I06PJ IRT106S
Inverter (<30 kW)			1EDI30I12MF 1EDI60I12AF 1EDU20I12SV		1EDI40I12AF 1EDI20I12-BT 2ED020I12-FI	1ED160N12AF 2EDL23I06PJ IRS2127(1)	
Inverter (<200 kW)					1EDI60I12AF 1ED020I12-B2 1EDU20I12SV	1EDU20I12SV 1ED020I12-B2 1EDI60I12AF	1EDI60I12AF 1ED020I12-F2 1EDU20I12SV
PFC			IRS4427S IRS4427L 2EDN8524F				IRS4427S IRS4427L 2EDN8524F
DC-DC (1 kW - 100 kW)							2EDL05N06PJ 2EDL23N06PJ 1EDI20N12AF 1EDI60N12AF
SMPS					2EDN8524F IRT106S IRS2186(4)		IRS4427S IRS4427L 2EDN7524F
Brake Chopper					1EDI05I12AF 1EDI10I12MF IRS4427L		
Active Bridge Rectifier							2ED020I12-F2 1ED020I12-F2 1ED020I12-FT

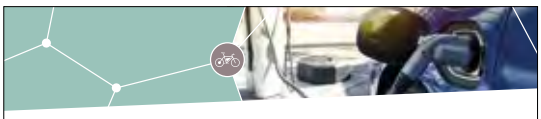

Mobility & Battery Driven

Full range of best-in-class components

From EV charger and light electric vehicle (LEV) to service robotics and drones, Infineon's family of configurable half-bridge and three-phase gate driver ICs can be combined with powerful Infineon MOSFETs to provide the required power and efficiency. Automotive-specific gate drivers qualified according to AEC-Q100 are also available.

For battery-driven applications, saving battery power is the key. Infineon offers an excellent selection of gate driver ICs providing the highest-possible energy efficiency and top precision.

Recommended Gate Drivers

Mobility & Battery Driven	Drones/ E-Bike/ E-Scooter	EV Charger/ Battery Charger	General Traction	Light Electric Vehicle (LEV)	Lawn Mower/ Vacuum/ Service Robotics
Inverter	6EDL04N02PR IRS2334 IRS2007S	IRS2186S	1ED60I12AF IR22145S IR2213	6EDL04N02PR IR2136S 2EDL05N06PF IRS2183	6EDL04N02PR
DC-DC		1ED020I12AF 1EDI40I12AF IR22145S			
PFC		IRS4427S IRS4427L 2EDN7524F			
HB (LLC)		1ED60I12AF 1EDU20I12SV			
Sync-Buck		IR2010S			
BLDC					6EDL04N02PR IR2136S IRS2007S

Renewable Energy

Powering an energy-smart world

Improving efficiency is the number one objective in the field of photovoltaics. Efficiency gains of as little as one percent can still yield enormous returns in renewable energy segment.

Infineon provides a comprehensive portfolio of high-performance gate driver ICs for photovoltaic inverters. By combining EiceDRIVER™ with super-junction MOSFETs such as CoolMOS™, IGBTs, Silicon Carbide (SiC) MOSFET such as CoolSiC™, as well as IGBT and SiC modules, Infineon enables solutions that maximizing uptime and energy production.

Recommended Gate Drivers

Renewable Energy	Heat Pump	Solar Inverter
Inverter (<2 kW)	6EDL04I06PT IR2136S 2ED2304S06F	
Inverter (>2 kW)	IR22145S IR2213 IR2235 1EDI20I12AF	
µInverter Boost		IRS4427S 2EDN7524F IRS4427L
µInverter DC-AC		2ED2304S06F IR22145S 2EDL05N06PJ
String Boost		2EDN8524F IRS4427S 1EDI20N12AF
String Inverter		1ED020I12-F2 IRT106S 1EDI60N12AF
Central Boost/SMPS		2EDN8524F 1EDI60I12AF
Central Inverter		1EDI60I12AF 1ED020I12-F2 IR22145S

High-performance motor control

Next-generation fully programmable three-phase gate driver

The 6EDL7141, Infineon's latest three-phase motor control gate driver IC will allow our customers to develop their next generation of high-performance battery-operated products using BLDC or PMSM motors. Ideal applications include cordless power tools, gardening products, and automated guided vehicles. With over 50 programmable parameters using a built-in digital serial peripheral interface (SPI), the 6EDL7141 is fully configurable to drive a wide range of MOSFETs to yield the best possible system efficiency. The integrated buck regulator provides the power for both the microcontroller and the Hall sensors in the motor, further reducing peripheral components and the required PCB area. In addition, with a full suite of system protection features such as OCP, UVLO, over-temperature, and locked rotor detection, this dedicated motor controller will increase reliability and robustness in severe operating fault conditions.

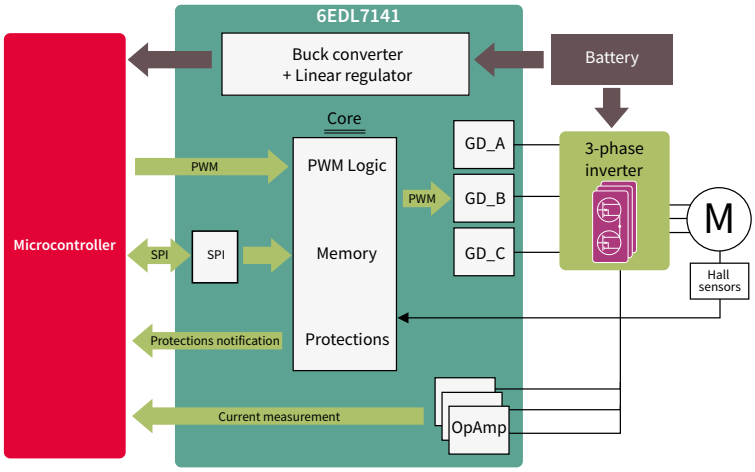

Features and benefits

Key features	Key benefits
Integrated power supply	Reduced external components and PCB area
Programmable slew rate	Optimized efficiency and EMI
Programmable gate drive supply	Maximum flexibility to use different inverter
3x current shunt amplifier	Highly accurate current sense while saving external components
ADC reference voltage of 5 V	Higher dynamic range to increase signal resolution
Complete dedicated motor control protection suite	Improve reliability and fault detection

EVAL_6EDL7141_TRAP_1SH

Single-shunt evaluation board for trapezoidal commutation of BLDC motors with 40 V OptiMOS™ 5 PQFN and XMC1404 MCU

On-board programming dongle

Featured IC: 6EDL7141

OPN: EVAL6EDL7141TRAP1SHTOBO1

Infineon support for gate-driver ICs

Useful links and helpful information

Further information, datasheets and documents

infineon.com/gatedriver
infineon.com/gdapplication
infineon.com/gdiso
infineon.com/ifxdesigner
infineon.com/crs
infineon.com/eicedriver
infineon.com/2edn

infineon.com/gdbrochure
infineon.com/gdfinder
infineon.com/SiC-GD
infineon.com/TDI
infineon.com/200vhvic
infineon.com/1EDcompact
infineon.com/700vhvic
infineon.com/1200vhvic

infineon.com/gdLowSide
infineon.com/microhvic
infineon.com/gan-eicedriver
infineon.com/2edi
infineon.com/6edl7141
infineon.com/SRC
infineon.com/2edl

Support
Evaluation Board
Tools

Microcontrollers

- XMC™ microcontrollers
- XMC™ ecosystem, enablement and partners
- XMC™ digital power explorer kit
- XMC™ starter kits
- XMC™ peripherals
- AURIX™ - 32-bit microcontrollers
- AURIX™ TC2xx family system architecture
- AURIX™ TC3xx family system architecture
- AURIX™ starter and application kits
- Application example: Industrial robotics
- Microcontroller PDH partner
- TRAVEO™ II portfolio
- Embedded Power ICs
- BLDC Motor Control Shield for Arduino
- CAN-FD transceivers

XMC™

One microcontroller platform – countless solutions

Infineon's XMC™ 32-bit industrial microcontroller portfolio is designed for efficiency and demanding industrial applications.

XMC™ MCU portfolio

- RAM: 8 kB up to 352 kB
- Flash: 16 kB up to 2 MB
- Accurate analog mixed-signal peripherals
- Fast timer/PWM peripherals
- Rich communication interfaces
- 16-pin to 196-pin count packages

XMC1000 family

- Arm® Cortex®-M0 up to 48 MHz
- Peripherals up to 96 MHz
- One-time event request unit (ERU)
- V_{DD}: 1.8 to 5.5 V
- $T_{Ambient}$: -40°C to 105°C

XMC4000 family

- Arm® Cortex®-M4 up to 144 MHz
- Built-in DSP, SFPU
- Peripherals up to 144 MHz
- Event request unit (ERU)
- $T_{Ambient}$: -40°C to 125°C

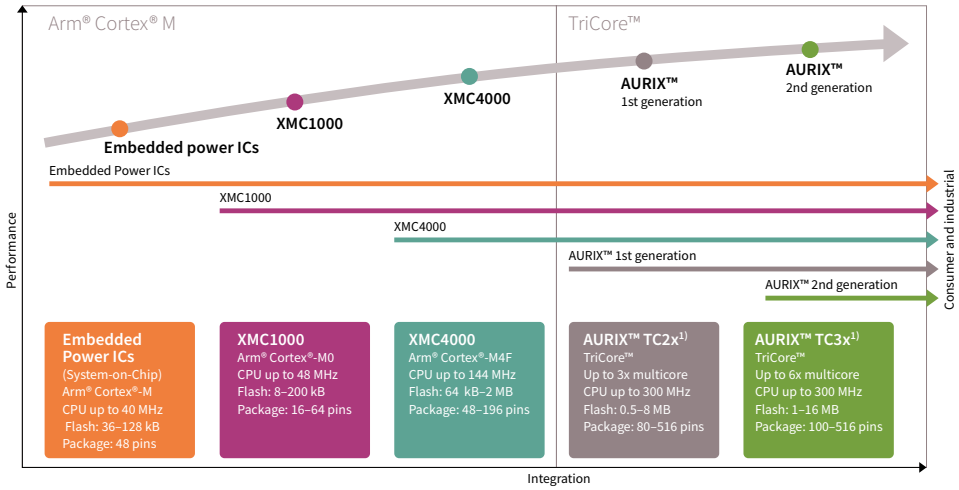

1) AURIX™ devices add safety and CAN FD

	XMC™ entry	LED lighting	Digital power	Motor control	Industrial I/O
				XMC4700/4800 Industrial drives, Hall and encoder I/F, ΔΣ demodulator, LQFP-100/144 LFBGA-196	**XMC4800, XMC4300** EtherCAT, +drives MultiCAN - 6 nodes LQFP-100/144 LFGBGA-196
XMC4000 Arm® Cortex®-M4F up to 144 MHz core 64 kB-2 MB Flash up to 125°C	**XMC4100** Basic control and connectivity VQFN-48 LQFP-64		**XMC4200** Server power 150 ps HRPWM LQFP-64/100	**XMC4100/XMC4400** Industrial drives, Hall and encoder I/F, ΔΣ demodulator, LQFP-64/100/144 LFBGA-144	**XMC4500** MultiCAN - 3 nodes, Ethernet, +drives ext. memory, SD/MMC LQFP-100/144 LFBGA-144
XMC1000 Arm® Cortex®-M0 up to 48 MHz core/ 96 MHz peripheral 8-200 KB flash up to 105°C 1.8-5.5 V		**XMC1400** Flicker-free, 4-Ch LED, SMPS, connectivity VQFN-40/64 LQFP-64	**XMC1400** SMPS control, connectivity VQFN-40/64 LQFP-64	**XMC1400** Hall and encoder I/F, MATH co-processor, CAN VQFN-40/64 LQFP-64	**XMC1400** Multi CAN - 2 nodes VQFN-48/64 LQFP-64
	XMC1100 Basic control and connectivity TSSOP-16/38 VQFN-24/40	**XMC1200, XMC1300** Flicker-free, 4-Ch LED, SMPS, connectivity TSSOP-16/28/38 VQFN-24, -40	**XMC1300** SMPS control, connectivity, TSSOP-16/38 VQFN-24/40	**XMC1300** Hall and encoder I/F, MATH co-processor, TSSOP-16/38 VQFN-24/40	

XMC™ ecosystem, enablement and partners

A comprehensive set of tools, products, components, and services are available for fast and efficient design with XMC™ microcontrollers.

Infineon enablement for XMC™ MCUs

DAVE™ – infineon.com/dave
Professional and free-of-charge development platform

XMC™ library for Embedded Coder® – infineon.com/matlab
Model-based design from MATLAB® and Simulink® environment, download free of charge

IEC60730 class B library for XMC™ – infineon.com/iec60730
Available for XMC™ industrial microcontrollers free of charge

Microcontroller/Probe™ XMC™ – infineon.com/ucprobexmc
Free-of-charge version of microcontroller/Probe™ for XMC™ MCUs to build user interfaces for visualizing, observing, and control of the internals of XMC™ MCUs

XMC™ link – infineon.com/xmclink
Functional isolated debug probe, based on SEGGER J-Link technology

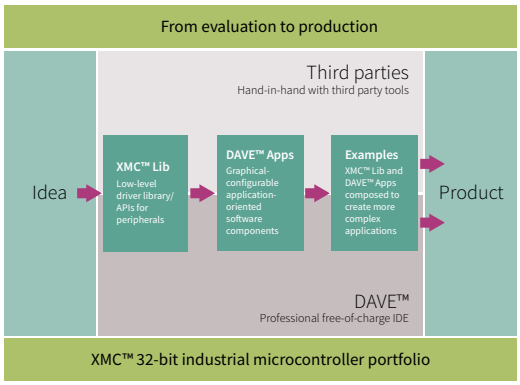

In addition to a rich third party ecosystem and enablement landscape, which support the entire development cycle from evaluation to production.
For more infineon.com/xmc-ecosystem

Infineon's XMC™ 32-bit industrial microcontroller portfolio is designed for system cost and efficiency for demanding industrial applications. It comes with the most advanced peripheral set in the industry. Fast and largely autonomous peripherals can be configured to support individual needs.

Highlights include analog mixed-signal, timer/PWM and communication peripherals powered by either an Arm® Cortex®-M0 core (XMC1000 family) or an Arm® Cortex®-M4 core with a floating point unit (XMC4000 family).

		Clocks		Memory		Analog			Timer/PWM				Connectivity		Package
Arm® Cortex®-M0	Co-processor	Frequency	Peripherals			ADC1 2-bit/S&H	Number of channels	Analog comparators	CCU4 (4 ch)	CCU8 (4 ch)	POS IF	BCCU	US IC	CAN 2.0B	
XMC11x	-	32	64	Flash	8-64 kB	1/1	Up to 12	-	1x	-	-	-	2x	-	VQFN 24/40 TSSOP 16/38
				RAM	16 kB										
XMC12x	-	32	64	Flash	16-200 kB	1/2	Up to 12	Up to 3	1x	-	-	✓	2x	-	VQFN 24/40 TSSOP 16/28/38
				RAM	16 kB										
XMC13x	✓	32	64	Flash	8-200 kB	1/2	Up to 12	Up to 3	1x	1x	✓	✓	2x	-	VQFN 24/40 TSSOP 16/38
				RAM	16 kB										
XMC14x	✓	48	96	Flash	32-200 kB	1/2	Up to 12	Up to 4	2x	2x	✓	✓	4x	✓	VQFN 40/48/64 LQFP 64
				RAM	16 kB										
Supply voltage range 1.8-5.5 V															
Temperature range -40°C … 85°C/105°C															

		Memory		Analog			Timer/PWM					Connectivity							Package
Arm® Cortex®-M0	Frequency [MHz]			ADC1 2-bit/S&H	Number of channels	DAC1 2-bit	CCU4 (4 ch)	CCU8 (4 ch)	HRPWM (150 ps)	POSIF	∑ Demodulator	US IC	CAN 2.0B	USB	Ethernet	EtherCAT®	SDIO/SD/MMC	External BUS Unit (EBU)	
XMC41x	80	Flash	64-128 kB	2/2	Up to 9	2 ch	2x	1x	✓	✓	-	4x	Up to 2	✓	-	-	-	-	VQFN 48 TQFP 64
		RAM	20 kB																
XMC42x	80	Flash	256 kB	2/2	Up to 9	2 ch	2x	1x	✓	✓	-	4x	2x	✓	-	-	-	-	VQFN 48 TQFP 64
		RAM	40 kB																
XMC43x	144	Flash	256 kB	2/2	14	2 ch	2x	1x	-	-	-	4x	2x	✓	✓	✓	✓	-	LQFP 100
		RAM	128 kB																
XMC44x	120	Flash	256-512 kB	4/4	Up to 18	2 ch	4x	2x	✓	2x	4 ch	4x	2x	✓	✓	-	-	-	TQFP 64 LQFP 100
		RAM	80 kB																
XMC45x	120	Flash	512 kB-1 MB	4/4	Up to 26	2 ch	4x	2x	-	2x	4 ch	4x	Up to 3	✓	✓	-	✓	✓	LQFP 100/144 LFBGA 144
		RAM	128-160 kB																
XMC47x	144	Flash	1.5-2 MB	4/4	Up to 26	2 ch	4x	2x	-	2x	4 ch	6x	6x	✓	✓	-	✓	✓	LQFP 100/144 LFBGA 196
		RAM	276-352 kB																
XMC48x	144	Flash	1-2 MB	4/4	Up to 26	2 ch	4x	2x	-	2x	4 ch	6x	6x	✓	✓	✓	✓	✓	LQFP 100/144 LFBGA 196
		RAM	276-352 kB																
Supply voltage range 3.1-3.6 V																			
Temperature range -40°C … 85°C/125°C																			

XMC™ digital power explorer kit

The new digital power explorer kit is designed with the particular goal of making it easy for engineers to take the first steps into digital power control with XMC™ microcontrollers. It showcases both XMC™ families Arm® Cortex-M microcontrollers: XMC4000 and XMC1000, 30 V dual n-channel OptiMOS™ MOSFETs and IRS2011S gate drivers. The kit includes two different control card options, XMC1300 control card (Arm® Cortex®-M0) and XMC4200 control card (Arm® Cortex®-M4F), which allow designers to evaluate both XMC™ microcontroller families and make the right price/performance choice for their application.

Features and benefits

Key features	Key benefits
› Synchronous buck converter evaluation kit controlled with XMC4200 or XMC1300 Arm® Cortex®-M MCUs	› Easy entry in digital power control applications
› Onboard resistive load banks	› Understand the details of voltage/peak current control and how to extract the maximum of XMC™ devices
› Featuring BSC0924NDI dual n-channel OptiMOS™ MOSFET and IRS2011S high- and low-side gate driver	› DAVE™ v4 APPs for buck converter and many more example
Different control schemes possible › Voltage mode control › Peak current mode control (with slope compensation)	

For more details on the product, click on the part number or contact our product support.

High power density 800 W 130 kHz platinum server design with XMC1300

The 800 W PFC CCM evaluation board demonstrates design and practical results of an 800 W 130 kHz platinum server PFC evaluation board based on Infineon devices, in terms of power semiconductors, non-isolated gate drivers, analog and digital controllers for the PFC converter, as well as flyback controller for the auxiliary supply. This evaluation board verifies the performance of the latest 600 V CoolMOS™ C7 superjunction MOSFET technology working at 130 kHz in a PFC CCM boost converter along with EiceDRIVER™ ICs and CoolSiC™ Schottky diode 650 V G5 using digital control.

Features and benefits

Key features	Customer benefits
› Classic PFC boost stage digitally controlled with XMC1302 including voltage and current loops	› High efficient PFC stage with a complete systemsolution from Infineon
› Protections, including cycle-by-cycle current protection	› HW and SW available
› Run time debug with isolated UART to PC interface and PC software	› Higher switching frequency permits higher power density

800 W PFC CCM with XMC1300	Specification		Infineon components	
	V_{in}	90-265 V_{AC}	**MCU**	XMC1302 (TSSOP38)
	V_{out_nom}	380 V_{DC}	**MOSFET**	600 V CoolMOS™ C7
	I_{out}	2 A	**MOSFET driver**	EiceDRIVER™ 2EDN7524F non-isolated
	PWM frequency	130 kHz	**Diode**	CoolSiC™ Schottky diode 650 V G5
	THD	<10%	**Auxiliary PSU**	ICE2QR4780Z
	Power factor	>0.9 from 20% load		
	Efficiency	97% (peak)		

600 W half-bridge LLC evaluation board with 600 V CoolMOS™ C7 SJ MOSFET with digital control

The 600 W LLC digital control evaluation board shows how to design the half-bridge LLC stage of a server SMPS with the target to meet 80+ Titanium standard efficiency requirements. For this purpose, the latest CoolMOS™ technologies, 600 V CoolMOS™ C7 or P6 superjunction MOSFETs have been used on the primary side, and OptiMOS™ low-voltage power MOSFET in SuperSO8, BSC010N04LS, in the synchronous rectification secondary stage in combination with QR CoolSET™ ICE2QR2280Z, high- and low-side driver 2EDL05N06PF, low-side gate driver 2EDN7524F and a XMC4200 microcontroller.

Features and benefits

Key features	Customer benefits
600 W LLC half-bridge stage with synchronous rectification (SR)	Learn LLC topology with a complete system solution from Infineon › HW and- SW available
All controlled with XMC4200 including: › Start up (PWM to PFM) and burst-mode algorithms › Adaptive dead time and capacitive-mode detection › No hard commutation at any condition	Close to customer solution › High efficiency → 97.8% › Reliability and power density

600 W LLC digital control	Specification		Infineon components	
	V_{in}	350-410 V_{DC}	**MCU**	XMC4200 (VQFN48)
	V_{out_nom}	12 V_{DC}	**MOSFET SR**	BSC010N04LS
	I_{out}	50 A	**HB driver**	2EDL05N06PF
	P_{out}	600 W	**LLC HB MOSFET**	CoolMOS™ IPP60R190P6
	f_{res}	157 kHz	**Auxiliary PSU**	ICE2QR2280Z

For more details on the product, click on the part number or contact our product support.

3 kW dual-phase LLC converter using XMC4400

The 3 kW dual-phase LLC demonstration board is an example of a high efficiency isolated DC-DC converter using the state-of-the-art Infineon components, both power devices and controller/driver ICs. The use of an advanced digital control using the XMC4400 microcontroller, together with the latest generation of CoolMOS™ and OptiMOS™ devices, allows achieving a very flat efficiency curve in the entire load range. The demonstration board is targeting the high voltage DC-DC stage of high-end telecom rectifiers.

Features and benefits

Key features	Customer benefits
› Full digital control by XMC4400 on the secondary side	› Full digital control by XMC4400 on the secondary side
› Digital current sharing with phase shedding	› Efficiency peak 98.5% and more than 97.2% in the entire load range
› Accurate algorithm able to prevent hard commutation and capacitive load mode in LLC operation	› Easy monitoring and parameter setting via a graphic user interface

3 kW dual-phase LLC converter using XMC4400	Specification		Infineon components	
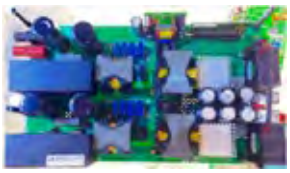	V_{in}	350-410 V_{DC}	**MCU**	XMC4400 (LQFP64)
	V_{out_nom}	54.3 V_{DC}	**SR MOSFET**	OptiMOS™ BSC093N15NS5
	I_{out_max}	55 A	**Drivers**	1EDI60N12AF 2EDN7524R
	P_{out}	3000 W	**LLC Half-bridge MOSFET**	CoolMOS™ P6 IPW60R041P6
	f_{range}	90-200 kHz	**Auxiliary PSU**	ICE2QR2280Z
	Peak efficiency	>98.4%		

RGB LED lighting shield with XMC1202 for Arduino

The RGB LED lighting shield with XMC1202 for Arduino uses a DC-DC buck topology and is able to drive up to three LED channels with constant current. The shield itself is powered by a programmable XMC™ 32-bit Arm® MCU with embedded brightness color control unit (BCCU, XMC1200 MCU series), for flicker-free LED dimming and color control.

Features

- Compatible with Arduino Uno R3 and XMC1100 boot kit from Infineon
- Easily configurable for various light engines and any input voltage (within operating conditions)
- Wide DC input voltage range
- Simple I²C interface

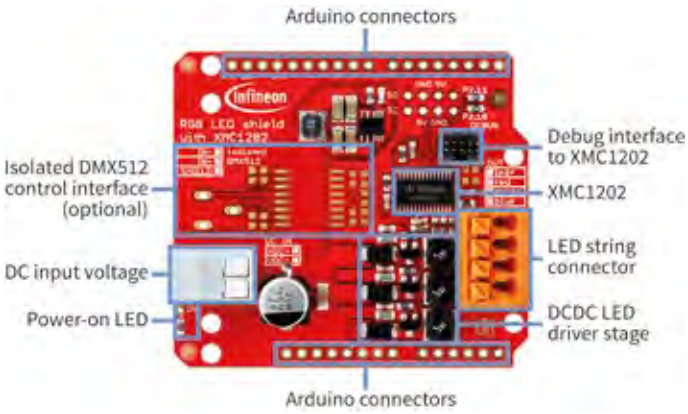

Operating conditions

- Nominal: 12-48 V input voltage (max. 6-60 V)
- Average LED current up to 700 mA (max. peak current 1 A)

The Infineon shields mentioned above are hardware compatible with Arduino and Infineon's XMC™ boot and relax kits.

For more details on the product, click on the part number or contact our product support.

3 kW dual-phase LLC converter

XMC4800 automation board V2 – explore XMC4800 microcontroller based on Arm® Cortex®-M4

The XMC4800 automation board V2 uses Infineon's industry leading XMC™ Arm® Cortex®-M4 microcontroller in combination with Infineon's supply, interface, communication and safety products. The XMC4800 automation board V2 is designed to evaluate the capabilities of the XMC4800 microcontroller especially in EtherCAT® slave applications and can be used with a wide range of development tools including Infineon's free-of-charge Eclipse based IDE, DAVE™.

Features and benefits

Key features	Customer benefits
› XMC4800-E196 MCU based on Arm® Cortex®-M4 at 144 MHz	› Complete automation kit gateway
› EtherCAT® slave controller, 2 MB flash and 352 kB RAM	› Combined MCU with EtherCAT slave application
› OPTIGA™ Trust E embedded security solution (CC EAL6+)	› Isolated interfaces with diagnose
› Real time clock crystal	› Ethernet connectivity with software examples available
› SPI FRAM (64 kB non-volatile memory)	› 24 V supply
› EtherCAT® slave node (2 EtherCAT® PHY and RJ45 Jacks)	› CAN connectivity
› 24 V ISOFACE™ 8-channel inputs and 8-channel outputs CAN transceiver	› Full software DAVE™ examples
› CAN transceiver	

XMC4800 automation board V2	Type	Description	OPN
	KIT_XMC48_AUT_BASE_V2	The XMC4800 automation board V2 utilizes Infineon's industry leading XMC Arm® Cortex®-M4 microcontroller in combination with Infineon's supply, interface/communication and safety products.	KITXMC48AUTBASEV2TOBO1
	XMC4800-E196K2048	Arm® Cortex®-M4 microcontroller	XMC4800E196K2048AAXQMA1
	ISO2H823V2.5	24 V 8-channel isolated output	ISO2H823V25XUMA1
	ISO1I813T	24 V 8-channel isolated input	ISO1I813TXUMA1
	SLS 32AIA020A4 USON10	OPTIGA™ Trust E – embedded security solution	SLS32AIA020A4USON10XTMA2
	TLE6250GV33	Infineon CAN transceiver	TLE6250GV33XUMA1
	IFX54441LDV	Infineon voltage regulator	IFX54441LDVXUMA1

For more details on the product, click on the part number or contact our product support.

XMC™ wireless power controller – enabling wireless charging transmitter applications

Infineon's XMC™ wireless power controller, based on the Arm® Cortex®-M0 core, provides a powerful and cost-effective platform for high performance, smart and safe wireless charging applications. The XMC™ wireless power controller helps the next-generation wireless charging systems to meet strict safety, environmental and regulatory requirements, while still enabling industry-leading charging performance and efficiency. This controller works seamlessly with Infineon's power devices in a scalable architecture to provide a complete charging solution for everything from a fast-charge smartphone, to a 20 W robot, or a 60 W drone and beyond.

Features and benefits

Key features	Customer benefits
Supports inductive and resonant charging methods	Supports 15 W charging and existing standards, including fast charging of smartphones
Power levels up to 60 W	Full power 15 W without exotic thermal management
Multiple industry standard and custom charging profiles using the same hardware architecture	Achieves charging rates equivalent to wired charging
Single- and multi-coil transmitters	Supports custom-charging profiles and industry standards on the same hardware
Half- and full-bridge support	Foreign object detection (FOD) with improved accuracy quality-factor monitoring
Variable and fixed frequency transmitter types	Foreign object detection capability can be extended beyond existing standards to improve detection
Buck and boost topologies	Supports custom coils, and greater than three coils
Integrated flash for parameter storage	
Voltage supply 1.8-5.5 V	
Space saving VQFN-40 package	

For a detailed overview of Infineon's wireless charging solutions, check the Wireless charging chapter.

XMC™ starter kits

Kits and evaluation boards

Xtreme2Go

Order number: KIT_XMC_2GO_XTR_ XMC1400

- XMC1400 family kit with ADAFRUIT, MikroE and Shields2Go connectivity. Extension for IoT and other cloud applications.
- The XMC1400 series devices are optimized for motor control, power conversion and LED Lighting applications and Human-Machine Interface (HMI)

For more information on this product, please contact our product support.

Platform2Go XMC4400

Order number: KIT_XMC_PLT_2GO_XMC4400

- Equipped with an Arm® Cortex®-M4 based XMC™ microcontroller, the XMC4400 Platform2Go is designed to evaluate the capabilities of Infineon's XMC4400 microcontroller. It can be used with a wide range of development tools including Infineon's free of charge Eclipse based IDE DAVE™
- This kit has the XMC4400 device with debugger plus Ethernet, CAN, Arduino, MikroBUS and Shields2Go form factor.

XMC1400 Arduino

Order number: KIT_XMC1400_ARDUINO

- This kit utilizes Infineon's industry leading Arm® Cortex® M0 microcontroller in combination with Arduino form factor.
- It can be used with a wide range of development tools including Infineon's free of charge Eclipse based IDE, DAVE™ and much more.

For more details on the product, click on the part number or contact our product support.

Platform2Go XMC4200

Order number: KIT_XMC_PLT 2GO_XMC 4200

- Equipped with an Arm® Cortex®-M4 based XMC™ microcontroller from Infineon Technologies AG, the XMC4200 Platform2Go is designed to evaluate the capabilities of Infineon's XMC4200 microcontroller.
- It can be used with a wide range of development tools including Infineon's free of charge Eclipse based IDE DAVE™
- This kit has the XMC4200 device with debugger plus CAN, Arduino, MikroBUS and Shields2Go form factor.

RGB LED Lighting Shield

Order number: KIT_XMC_LED_DALI_20_RGB

- One of the first intelligent evaluation boards compatible with Arduino as well as Infineon's XMC1100 BOOT KIT.
- Designed to be easily configurable and combinable for different LED light engines and lamps, for fast prototyping and in-expensive evaluation of LED lighting applications.
- The RGB LED lighting shield with XMC1302 uses a DC-DC buck topology.

For more details on the product, click on the part number or contact our product support.

XMC™ peripherals

IEC60730 class B library for XMC™

Supporting the XMC1xxx and XMC4xxx families
In collaboration with the consultancy Hitex, Infineon developed the IEC60730 – class B software library for XMC™ industrial microcontrollers for household electrical appliances. This is a dedicated software library for XMC™ MCUs with routines for internal supervisory functions and for self-diagnostics.

Extended documentation and pre-certified software libraries to XMC™ Cortex® Arm® based controllers are free of charge. For more information, please check: www.hitex.com/classb

Documentation	Consultancy
› Safety application note › Failure mode report › FMEDA tool by Infineon, revised in workshops by TÜV Süd	hitex EMBEDDED TOOLS & SOLUTIONS Implementation support by Hitex

Embedded security for XMC™ MCUs

Infineon and its partners provide solutions which support with data protection, allowing authentication and encryption and securing firmware file updates to prevent cloning and downtimes.

Security solutions		
Software	**Hardware**	
Secure bootloader by Infineon, XMC1000	**OPTIGA™ family by Infineon** Hardware-based security solutions	
CodeMeter µEmbedded by WIBU, XMC4000 exclusive	**OPTIGA™ Trust family**	**OPTIGA™ TPM family**
KMS/CycurKEYS by ESCRYPT, XMC4000		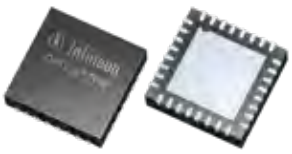
emSecure by SEGGER	Turnkey and programmable security solutions	Standardized certified turnkey solution

For more details on the product, click on the part number or contact our product support.

AURIX™ – 32-bit microcontrollers

32-bit multicore TriCore™ – safety joins performance

AURIX™ is Infineon's family of microcontrollers serving the needs of industrial applications in terms of performance and safety. Its innovative multicore architecture, based on up to six independent 32-bit TriCore™ CPUs at 300 MHz, has been designed to meet the highest safety standards while increasing the performance at the same time. Using the AURIX™ scalable platform, developers will be able to implement applications such as motor control and drives, PLC or any other automation application. Developments using AURIX™ require less effort to achieve the SIL/ IEC61508 standard based on its innovative safety concept and multiple HW safety features. Furthermore, AURIX™ has enhanced communication capabilities to support communication between CAN, LIN, FlexRay and Ethernet buses.

Features and benefits

Key features	Customer benefits
› TriCore™ with DSP functionality	› High scalability gives the best cost-performance fit
› Best-in-class real-time performance: up to six TriCore™ with up to 300 MHz per core	› High integration leads to significant cost savings
› Supporting floating point and fix point with all cores	› High integration leads to reduced complexity
› Up to 6.9 MB of internal RAM, up to 16 MB of flash	› Innovative supply concept leads to best-in-class power consumption
› Innovative single supply 5 V or 3.3 V	
› IEC61508 conformance to support safety requirements up to SIL 3	
› Embedded EEPROM	
› Advanced communication peripherals: CAN FD, LIN, SPI, FlexRay, Ethernet	

AURIX™ TC2xx family system architecture

Powerful 1st generation AURIX™ TC2xx system architecture

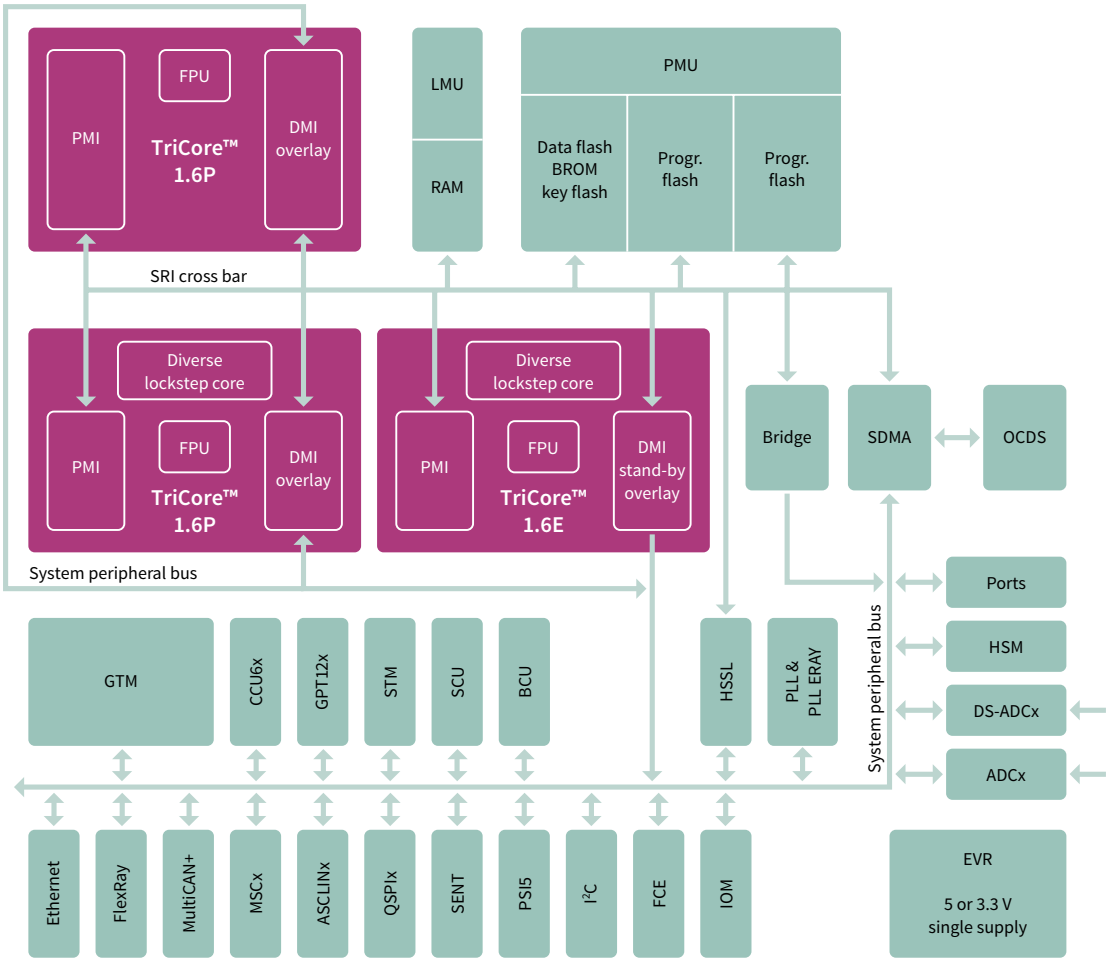

AURIX™ TC2xx family package scalability

Flash \ Package	TQFP-80	TQFP-100	LQFP-144 TQFP-144	LQFP-176	LFBGA-292	BGA-416	LFBGA-516
9x series up to 8 MB					TC297 300 MHz	TC298 300 MHz	TC299 300 MHz
7x series up to 4 MB				TC275 200 MHz	TC277 200 MHz		
6x series up to 2.5 MB			TC264 200 MHz	TC265 200 MHz	TC267 200 MHz		
3x series up to 2 MB		TC233 200 MHz	TC234 200 MHz		TC237 200 MHz		
2x series up to 1 MB	TC222 133 MHz	TC223 133 MHz	TC224 133 MHz				
1x series up to 512 KB	TC212 133 MHz	TC213 133 MHz	TC214 133 MHz				

Upgrade/downgrade with pin-compatible packages

AURIX™ TC2xx portfolio

Product type	Max. clock frequency [MHz]	Program memory [kB]	SRAM (incl. cache) [kB]	Co-processor[1]	Cores/lockstep	Timed I/O	Number of ADC channels	External bus interface	CAN nodes	Communication interfaces[2]	Temperature ranges[3]	Packages	Additional features/remarks[4]
TC299TX	300	8000	2728	FPU	3/1	263	84/10 DS	yes	6	4xASCLIN, 6xQSPI, 3xMSC, 2xI2C, 15xSENT, HSSL, 5xPSI5, 2xFlexRay, Ethernet, CAN FD	K	LFBGA-516	EVR, STBU, HSM
TC299TP	300	8000	728	FPU	3/1	263	84/10 DS	yes	6	4xASCLIN, 6xQSPI, 3xMSC, 2xI2C, 15xSENT, HSSL, 5xPSI5, 2xFlexRay, Ethernet, CAN FD	K	LFBGA-516	EVR, STBU, HSM
TC298TP	300	8000	728	FPU	3/1	232	60/10 DS	yes	6	4xASCLIN, 6xQSPI, 3xMSC, 2xI2C, 15xSENT, HSSL, 5xPSI5, 2xFlexRay, Ethernet, CAN FD	K	LBGA-416	EVR, STBU, HSM
TC297TA	300	8000	2728	FPU, FFT, CIF	3/1	169	60/10 DS	no	6	4xASCLIN, 4xQSPI, 3xMSC, 2xI2C, 15xSENT, HSSL, 5xPSI5, 2xFlexRay, Ethernet, CAN FD	K	LFBGA-292	EVR, STBU, HSM
TC297TX	300	8000	2728	FPU	3/1	263	60/10 DS	no	6	4xASCLIN, 4xQSPI, 3xMSC, 2xI2C, 15xSENT, HSSL, 5xPSI5, 2xFlexRay, Ethernet, CAN FD	K	LFBGA-292	EVR, STBU, HSM
TC297TP	300	8000	728	FPU	3/1	169	60/10 DS	no	6	4xASCLIN, 4xQSPI, 3xMSC, 2xI2C, 15xSENT, HSSL, 5xPSI5, 2xFlexRay, Ethernet, CAN FD	K	LFBGA-292	EVR, STBU, HSM
TC277TP	200	4000	472	FPU	3/2	169	60/6 DS	no	4	4xASCLIN, 4xQSPI, 2xMSC, HSSL, 2xI2C, 10xSENT, 3xPSI5, FlexRay, Ethernet, CAN FD	K	LFBGA-292	EVR, WUT, HSM
TC275TP	200	4000	472	FPU	3/2	112	60/6 DS	no	4	4xASCLIN, 4xQSPI, 2xMSC, HSSL, 2xI2C, 10xSENT, 3xPSI5, FlexRay, Ethernet, CAN FD	K	LQFP-176	EVR, WUT, HSM
TC267D	200	2500	240	FPU	2/1	169	50/3 DS	no	5	4xASCLIN, 4xQSPI, 2xMSC, 2xI2C, 10xSENT, 3xPSI5, HSSL, FlexRay, Ethernet, CAN FD	K	LFBGA-292	EVR, STBU
TC265D	200	2500	240	FPU	2/1	112	50/3 DS	no	5	4xASCLIN, 4xQSPI, 2xMSC, 2xI2C, 10xSENT, HSSL, 3xPSI5, FlexRay, Ethernet, CAN FD	K	LQFP-176	EVR, STBU
TC264DA	200	2500	752	FPU, FFT, CIF	2/1	88	40/3 DS	no	5	4xASCLIN, 4xQSPI, 2xMSC, 2xI2C, 10xSENT, HSSL, 3xPSI5, FlexRay, Ethernet, CAN FD	K	LQFP-144	EVR, STBU
TC264D	200	2500	240	FPU	2/1	88	40/3 DS	no	5	4xASCLIN, 4xQSPI, 2xMSC, 2xI2C, 10xSENT, HSSL, 3xPSI5, FlexRay, Ethernet, CAN FD	K	LQFP-144	EVR, STBU
TC237LP	200	2000	192	FPU	1/1	120	24	no	6	2xASCLIN, 4xQSPI, 4xSENT, FlexRay, CAN FD	K	LFBGA-292	EVR, WUT, HSM
TC234LA	200	2000	704	FPU, FFT	1/1	120	24	no	6	2xASCLIN, 4xQSPI, 4xSENT, FlexRay, Ethernet	K	TQFP-144	EVR, WUT, HSM
TC234LX	200	2000	704	FPU	1/1	120	24	no	6	2xASCLIN, 4xQSPI, 4xSENT, FlexRay, Ethernet	K	TQFP-144	EVR, WUT, HSM
TC234LP	200	2000	192	FPU	1/1	120	24	no	6	2xASCLIN, 4xQSPI, 4xSENT, FlexRay, CAN FD	K	TQFP-144	EVR, WUT, HSM
TC233LP	200	2000	192	FPU	1/1	78	24	no	6	2xASCLIN, 4xQSPI, 4xSENT, FlexRay, CAN FD	K	TQFP-100	EVR, WUT, HSM
TC224L	133	1000	96	FPU	1/1	120	24	no	3	2xASCLIN, 4xQSPI, 4xSENT, CAN FD	K	TQFP-144	EVR, WUT
TC223L	133	1000	96	FPU	1/1	78	24	no	3	2xASCLIN, 4xQSPI, 4xSENT, CAN FD	K	TQFP-100	EVR, WUT
TC222L	133	1000	96	FPU	1/1	59	24	no	3	2xASCLIN, 4xQSPI, 4xSENT, CAN FD	K	TQFP-80	EVR, WUT
TC214L	133	500	96	FPU	1/1	120	14	no	3	2xASCLIN, 4xQSPI, 4xSENT, CAN FD	K	TQFP-144	EVR, WUT
TC213L	133	500	96	FPU	1/1	78	24	no	3	2xASCLIN, 4xQSPI, 4xSENT, CAN FD	K	TQFP-100	EVR, WUT
TC212L	133	500	96	FPU	1/1	59	24	no	3	2xASCLIN, 4xQSPI, 4xSENT, CAN FD	K	TQFP-80	EVR, WUT

[1] CIF = camera and external ADC Interface, FFT = fast fourier transform accelerator, FPU = floating point unit, PCP = peripheral control processor
[2] ASC = asynchronous serial channel, ASCLIN = asyn/synchronous local interconnect network, HSSL= high-speed serial link, I^2C = inter-integrated circuit, LIN = local interconnect network, MLI = micro link interface, MSC = micro second channel, PSI5 = peripheral sensor interface 5, QSPI = queued serial peripheral interface, SENT = single edge nibble transmission, SSC = synchronous serial channel, CAN FD ISO11898-1:2015
[3] Ambient temperature range: A = -40°C ... 140°C, B = 0°C ... 70°C, F = -40°C ... 85°C, H = -40°C ... 110°C, K = -40°C ... 125°C, L = -40°C ... 150°C, X = -40°C ... 105°C
[4] EVR = embedded voltage regulator, HSM = hardware security module, STBU = stand-by control unit, WUT = wake-up timer

Evolution from TC2xx to TC3xx - Easy migration with focus on reuse

- Fast conversion of existing AURIX™ TC2xx designs
  - Backwards compatibility
  - High AURIX™ TC3xx compatibility to pinout of existing QFP100/144/176 and BGA packages
- Flexibility - scalability within the AURIX™ TC3xx family
  - Up-/Downgrade paths for devices in identical packages
  - Compatible pin-out of QFP/BGA package options enabling combination designs
- Pin-to-pin compatibility between the devices of AURIX™ TC2xx/TC3xx and from generation to generation
- A high scalability with a very large portfolio for both AURIX™ TC2xx and TC3xx

AURIX™ TC3xx family system architecture

AURIX™ TC3xx – scalable family - from low-cost to high-performance applications

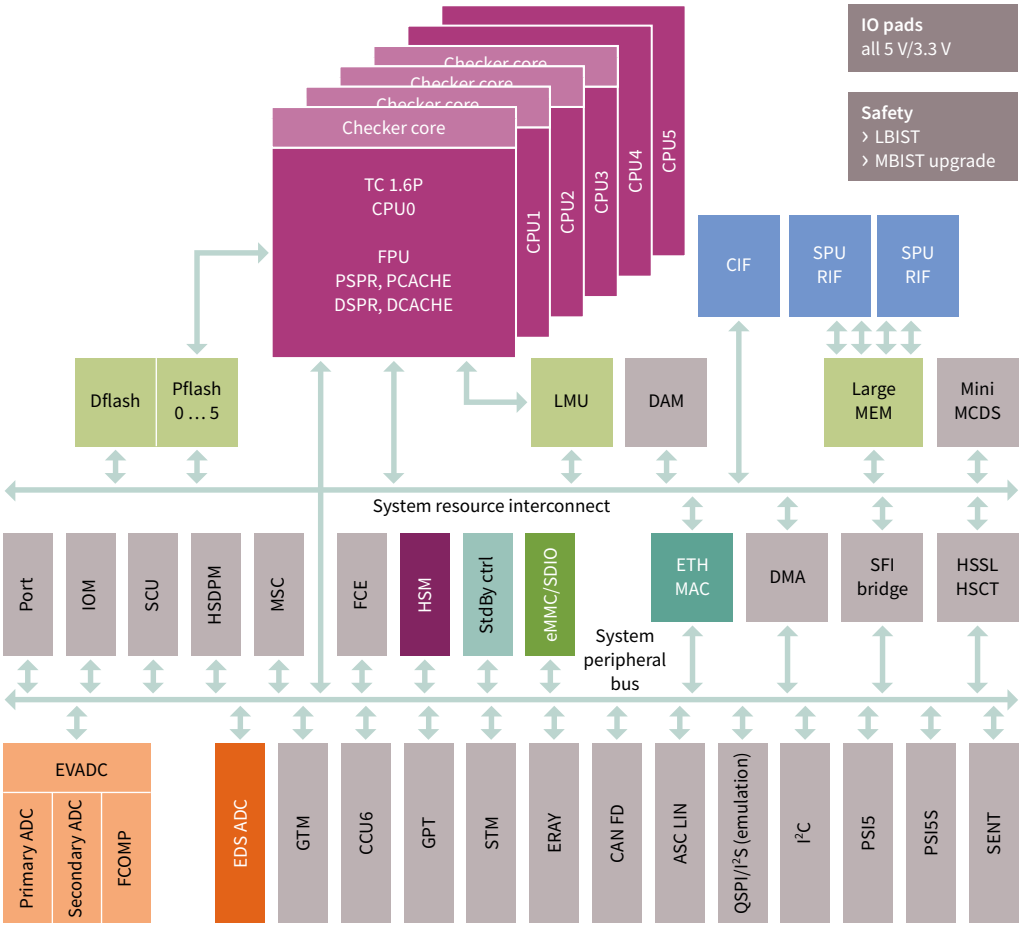

Performance
- New TriCore™ 162 generation
- New instructions
- Up to 6 CPUs at 300 MHz
- New direct flash access path

HSM: Full EVITA compliance
- New accelerators ECC256/SHA256
- Available on all devices

ADAS
- LVDS IF
- Signal processing unit

ADC
- Improvement of existing ADC
- Reduction of capacitive load

Delta-sigma
- Enhanced concept

Memories
- Larger SRAM
- SRAM/flash ratio increased
- Enhanced MPU
- A/B swap support

Stand-by control unit
- Low-power modes

Ethernet
- 1 Gbit/s ETH
- QoS services
- Remote DMA

eMMC/SDIO
- External NAND flash IF

AURIX™ TC3xx provides an upgrade on key parameters with focus on SW and HW reuse

Performance increase and reduction of power	Increased from 3 to 6 cores Developed in 40 nm for power consumption reduction
Scalable & backwards compatible to TC2xx	Fully compatible devices with focus on HW & SW reuse
Functional safety	IEC61508 compliant enabling SiL-3 level
Enhanced security	Upgraded to Full EVITA support
Improved networking	Richer peripheral set
SOTA	Full support of SOTA A/B swap

AURIX™ TC3xx package scalability

Flash	Package	TQFP-80	TQFP-100	T/LQFP-144	BGA-180	LQFP-176	BGA-233	LFBGA-292	LFBGA-516
6x 300 MHz	9x A series 16 MB							TC397XA 300 MHz	
6x 300 MHz	9x series 16 MB							TC397x 300 MHz	TC399x 300 MHz
4x 300 MHz	Ex series 12 MB							TC387Qx 300 MHz	
4x 300 MHz	8x series 10 MB							TC387Q 300 MHz	TC389Q 300 MHz
3x 300 MHz	7x X series 6 MB							TC377TX 300 MHz	
3x 300 MHz	7x series 6 MB					TC375T 300 MHz		TC377T 300 MHz	
2x 300 MHz	6x series 4 MB			TC364D 300 MHz	TC366D 300 MHz	TC365D 300 MHz		TC367D 300 MHz	
4x 300 MHz	Ax series 4 MB						TC3A8Q 300 MHz	TC3A7Q 300 MHz	
3x 300 MHz	5x A series 4 MB				TC356TA 300 MHz			TC357TA 300 MHz	
2x 300 MHz	3x A series 2 MB				TC336DA[1] 200 MHz			TC337DA[1] 200 MHz	
1x 300 MHz	3x series 2 MB	TC332L[1] 200 MHz	TC333L[1] 200 MHz	TC334L[1] 200 MHz	TC336L[1] 200 MHz			TC337L[1] 200 MHz	
1x 300 MHz	2x series 1 MB	TC322L 160 MHz	TC323L 160 MHz	TC324L 160 MHz				TC327L 160 MHz	

L – Single lockstep core D – Dual core T – Triple core Q – Quadruple core X – Sextuple core

Control and actuate | Sense and compute

1) An option of 300 MHz is also available

- Advanced package technologies deliver the best price/performance ratio
- Customers can choose between different devices in the same pin-compatible package

AURIX™ TC3xx

MCU scalability
- Performance and flash
- Pin compatibility
- Binary-compatible cores

Safety/security concept
- ISO 26262 compliance
- IEC61508 compliant

Power consumption
- On-chip SC DC-DC high-efficiency power supply
- Integrated standby controller

Connectivity
- Ethernet: up to 2x1 GB
- CAN FD: up to 12 channels
- eMMC IF

AURIX™ TC3xx portfolio

Product type	Cores/lockstep	Max clock frequency [MHz]	Program memory [kB]	SRAM (incl. cache) [kB]	Radar accelerator/ radar interface [1]	CAN/CAN FD nodes	Ethernet 100/1000 Mbit	External bus interface [2]	Communication interfaces	HSM	Temperature ranges	Packages	Additional features/ remarks [3]
AURIX™ TC3xx family													
TC399XX	6/4	300	16000	6912	no	12	1	EBU, eMMC, 2x HSSL	6x SPI, 2x FlexRay, 12x LIN, 25x SENT, 4x PSI5, 2x I2C, 4x MSC	EVITA full	K, L	LFBGA-516	5 V/3.3 V EVR, 8-bit SCR
TC399XP	6/4	300	16000	2816	no	12	1	EBU, eMMC, 2x HSSL	6x SPI, 2x FlexRay, 12x LIN, 25x SENT, 4x PSI5, 2x I2C, 4x MSC	EVITA full	K, L	LFBGA-516	5 V/3.3 V EVR, 8-bit SCR
TC397XX	6/4	300	16000	6912	no	12	1	eMMC, 2x HSSL	6x SPI, 2x FlexRay, 12x LIN, 25x SENT, 4x PSI5, 2x I2C, 4x MSC	EVITA full	K, L	LFBGA-292	5 V/3.3 V EVR, 8-bit SCR
TC397XP	6/4	300	16000	2816	no	12	1	eMMC, 2x HSSL	6x SPI, 2x FlexRay, 12x LIN, 25x SENT, 4x PSI5, 2x I2C, 4x MSC	EVITA full	K, L	LFBGA-292	5 V/3.3 V EVR, 8-bit SCR
TC397XA	6/4	300	16000	6912	2x SPU/ 8x 400 Mbit/s LVDS	12	1	2x HSSL	6x SPI, 2x FlexRay, 12x LIN, 25x SENT, 4x PSI5, 2x I2C, 4x MSC	EVITA full	K, L	LFBGA-292	5 V/3.3 V EVR, 8-bit SCR
TC389QP	4/2	300	10000	1568	no	12	1	HSSL	5x SPI, 2x FlexRay, 24x LIN, 25x SENT, 4x PSI5, 2x I2C, 3x MSC	EVITA full	K, L	LFBGA-516	5 V/3.3 V EVR, 8-bit SCR
TC387QP	4/2	300	10000	1568	no	12	1	HSSL	5x SPI, 2x FlexRay, 24x LIN, 25x SENT, 4x PSI5, 2x I2C, 3x MSC	EVITA full	K, L	LFBGA-292	5 V/3.3 V EVR, 8-bit SCR
TC377TX	3/3	300	6000	4208	no	12	2	eMMC, HSSL	5x SPI, 1x FlexRay, 12x LIN, 15x SENT, 2x PSI5, 1x I2C, 2x MSC	EVITA full	K, L	LFBGA-292	5 V/3.3 V EVR, 8-bit SCR
TC377TP	3/2	300	6000	1136	no	8	1	HSSL	5x SPI, 1x FlexRay, 12x LIN, 15x SENT, 2x PSI5, 1x I2C, 2x MSC	EVITA full	K, L	LFBGA-292	5 V/3.3 V EVR, 8-bit SCR
TC375TP	3/2	300	6000	1136	no	8	1	HSSL	5x SPI, 1x FlexRay, 12x LIN, 15x SENT, 2x PSI5, 1x I2C, 2x MSC	EVITA full	K, L	LQFP-176	5 V/3.3 V EVR, 8-bit SCR
TC367DP	2/2	300	4000	672	no	8	1	HSSL	4x SPI, 1x FlexRay, 12x LIN, 10x SENT, 2x PSI5, 1x I2C, 1x MSC	EVITA full	K, L	LFBGA-292	5 V/3.3 V EVR, 8-bit SCR
TC366DP	2/2	300	4000	672	no	8	1	HSSL	4x SPI, 1x FlexRay, 12x LIN, 10x SENT, 2x PSI5, 1x I2C, 1x MSC	EVITA full	K, L	LFBGA-196	5 V/3.3 V EVR, 8-bit SCR
TC365DP	2/2	300	4000	672	no	8	1	HSSL	4x SPI, 1x FlexRay, 12x LIN, 10x SENT, 2x PSI5, 1x I2C, 1x MSC	EVITA full	K, L	LQFP-176	5 V/3.3 V EVR, 8-bit SCR
TC364DP	2/2	300	4000	672	no	8	1	HSSL	4x SPI, 1x FlexRay, 12x LIN, 10x SENT, 2x PSI5, 1x I2C, 1x MSC	EVITA full	K, L	TQFP-144	5 V/3.3 V EVR, 8-bit SCR
TC364DP	2/2	300	4000	672	no	8	1	HSSL	4x SPI, 1x FlexRay, 12x LIN, 10x SENT, 2x PSI5, 1x I2C, 1x MSC	EVITA full	K, L	LQFP-144	5 V/3.3 V EVR, 8-bit SCR
TC357TA	3/2	300	4000	3664	2x SPU/ 8x 400 Mbit/s LVDS	8	1	no	4x SPI, 1x FlexRay, 4x LIN	EVITA full	K, L	LFBGA-292	5 V/3.3 V EVR, 8-bit SCR
TC356TA	3/2	300	4000	3664	2x SPU/ 8x 400 Mbit/s LVDS	8	1	no	4x SPI, 1x FlexRay, 4x LIN	EVITA full	K, L	LFBGA-196	5 V/3.3 V EVR, 8-bit SCR
TC337DA	2/1	200	2000	1568	1x SPU/ 4x 400 Mbit/s LVDS	8	1	eMMC	4x SPI, 1x FlexRay, 12x LIN, 6x SENT	EVITA full	K, L	LFBGA-292	5 V/3.3 V EVR, 8-bit SCR
TC336DA	2/1	200	2000	1568	1x SPU/ 4x 400 Mbit/s LVDS	8	1	eMMC	4x SPI, 1x FlexRay, 12x LIN, 6x SENT	EVITA full	K, L	LFBGA-196	5 V/3.3 V EVR, 8-bit SCR
TC337LP	1/1	200	2000	248	no	8	no	no	4x SPI, 1x FlexRay, 12x LIN, 6x SENT	EVITA full	K, L	LFBGA-292	5 V/3.3 V EVR, 8-bit SCR
TC336LP	1/1	200	2000	248	no	8	no	no	4x SPI, 1x FlexRay, 12x LIN, 6x SENT	EVITA full	K, L	LFBGA-196	5 V/3.3 V EVR, 8-bit SCR
TC334LP	1/1	200	2000	248	no	8	no	no	4x SPI, 1x FlexRay, 12x LIN, 6x SENT	EVITA full	K, L	TQFP-144	5 V/3.3 V EVR, 8-bit SCR
TC333LP	1/1	200	2000	248	no	8	no	no	4x SPI, 1x FlexRay, 12x LIN, 6x SENT	EVITA full	K, L	TQFP-100	5 V/3.3 V EVR, 8-bit SCR
TC332LP	1/1	200	2000	248	no	8	no	no	4x SPI, 1x FlexRay, 12x LIN, 6x SENT	EVITA full	K, L	TQFP-80	5 V/3.3 V EVR, 8-bit SCR
TC327LP	1/1	160	1000	96	no	8	no	no	4x SPI, 6x SENT, 6x LIN	EVITA full	K, L	LFBGA-292	5 V/3.3 V EVR, 8-bit SCR
TC324LP	1/1	160	1000	96	no	8	no	no	4x SPI, 6x SENT, 6x LIN	EVITA full	K, L	TQFP-144	5 V/3.3 V EVR, 8-bit SCR
TC323LP	1/1	160	1000	96	no	8	no	no	4x SPI, 6x SENT, 6x LIN	EVITA full	K, L	TQFP-100	5 V/3.3 V EVR, 8-bit SCR
TC322LP	1/1	160	1000	96	no	8	no	no	4x SPI, 6x SENT, 6x LIN	EVITA full	K, L	TQFP-80	5 V/3.3 V EVR, 8-bit SCR

1) SPU – Signal processing unit
2) HSSL – High-speed serial link
3) 8-bit SCR – Standby controller for low power modes
4) EVR – Embedded voltage regulator

AURIX™ starter and application kits

Infineon starter kits – 32-bit microcontrollers

AURIX™ Triboards Kits

- Full evaluation board for development to write and debug your 1st programs
- Includes getting started advice, free TriCore™ entry tool chain, technical documentation, compiler and debugger
- TriBoard available for all productive silicon

AURIX™ TFT Kits

- Low cost board for early evaluation with limited access to signals
- Additional touchscreen display for convenient handling
- TFT board available for every silicon

Click on the following to find/purchase the kit:

Arduino AURIX™ TC275 ShieldBuddy Kit

- The Hitex TC275/TC375 ShieldBuddy follows the Arduino standard
- Compatible with 100's of Arduino application shields
- Evaluation licenses available
- Ideal for getting started on a high-end real time embedded industrial or automotive application as well as students and hobbyists

Arduino AURIX™ TC375 ShieldBuddy Kit

Order number: KIT_A2G_TC375_ARD_SB

- Compatible with 100's of Arduino application shields
- Evaluation licenses available
- Ethernet
- Ideal for getting started on a high-end real time embedded industrial or automotive application as well as students and hobbyists

For more details on the product, click on the part number or contact our product support.

AURIX™ TC275 Lite kit

- AURIX™ TC275 device in LQFP-176 package
- FTDI based debugger with micro USB
- Use of Arduino Uno/compatible platform

AURIX™ TC375 Lite kit

- AURIX™ TC375 device in LQFP-176 package
- Ethernet PHY
- FTDI based debugger with micro USB
- Use of Arduino Uno/compatible platform

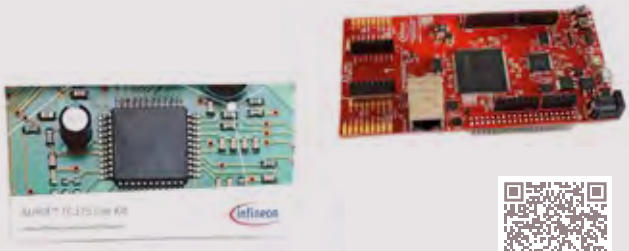

Discover our AURIX™ kits platform for more starter and application kits

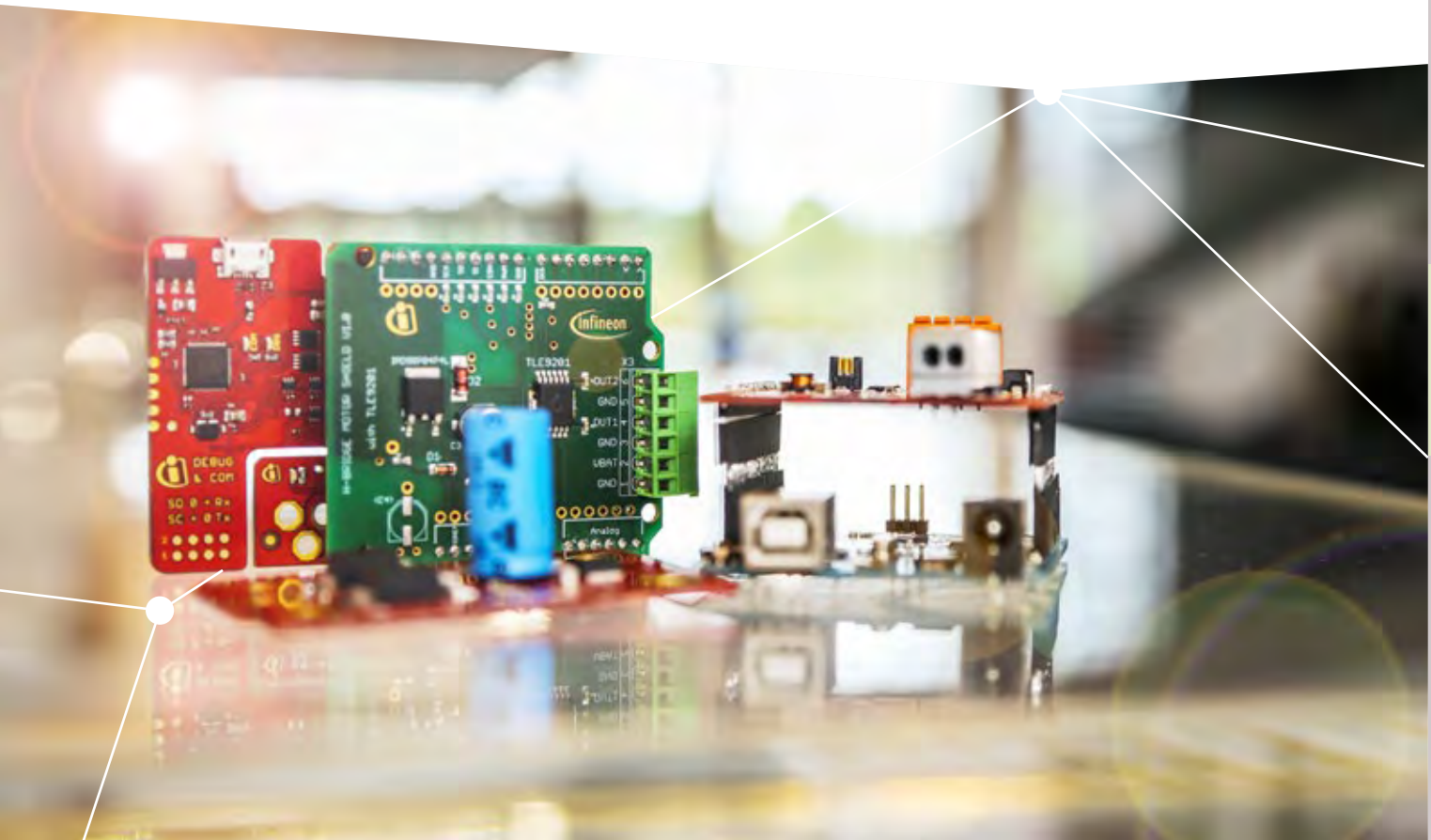

Infineon application kits – 32-bit microcontrollers

24 GHZ Radar

Based on the Infineon AURIX™ and MMIC BGT24A families

- BGT24A transceiver MMIC family, e.g. BGTA24ATR12,
- 2-bit radar microcontroller family, e.g. SAK-TC264DA-40F200
- FFT acceleration engine and extended memory for radar image storage
- Ethernet as measurement interface

60 GHZ Radar

XENSIV™ BGT60ATR24C
+ AURIX™ TC356TA
+ OPTIREG™ TLS4120D0EPV33/TLS715B0EJV50

- Modular architecture
- Automotive qualified components
- Virtual array processing (TDM MIMO)
- Ultra-wideband operation of 4 GHz
- Optimized performance versus power with SPU

Motor control

Order number: KIT_AURIX_TC234_MOTORCTR

- TC234 application kit with TFT display incl. safety supply TLF35584
- Driving of a 3-phase PMSM/BLCD (12 V/max. 50 W)
- BLDC motor from Nanotec integrated
- Software available with flexible configuration

Motor control board AURIX™ TC387

Order number: KIT_AURIX_TC234_MOTORCTR

- TC387 Application Kit with TFT Display incl. safety supply TLF35584
- eMotor Power board: 3-phase motor control power board with TLE9180D-31QK 3-phase gate driver IC, MOSFET power stage, and auxiliary components
- Commands and monitoring via TFT touch screen
- Field oriented control (FOC) algorithm using 3-phase current sensing (EVADC) encoder as position sensor (GPT12) and AURIX™ GTM as PWM generator

For more details on the product, click on the part number or contact our product support.

Infineon application kits – 32-bit microcontrollers

Wireless charging: the beast 1.0

- WPC Qi v1.2.4 certified
- Support fast charging enabled devices (7.5W and 9W)
- AUTOSAR support
- Improved accuracy Foreign Object Detection (FOD)

Wireless charging: the beast 2.0

- Beast 2.0 is powered by the high-performance Infineon AURIX™ or Traveo™ II
- Latest WPC Qi functionality
- Supports 15W charging for Qi-certified devices
- Improved accuracy Foreign Object Detection (FOD)
- Supports future products and standards with field-upgradeable Pantheon™ software

For more details on the product, click on the part number or contact our product support.

Industrial robotics

Application example

Application features

- High computing performances
- High level of accuracy, integration and efficiency
- Safety management in line with current norms
- Various topologies for axes, joints and motors
- Security features that protect intellectual property from counterfeiting

System benefits

- High computing performance: up to 6x 300 MHz
- High flexibility thanks to tailored peripherals
- Integrated safety support (EN ISO 10218 and ISO/TS15066)
- Integrated security with hardware security module
- Robust 3 V-, 5 V-, LVDS – PortPins
- Large portfolio with long-term availability

Suggested products

- TC23x
- TC33x
- TC36x
- TC37x
- TC38x
- TC39x
- XMC4xxx

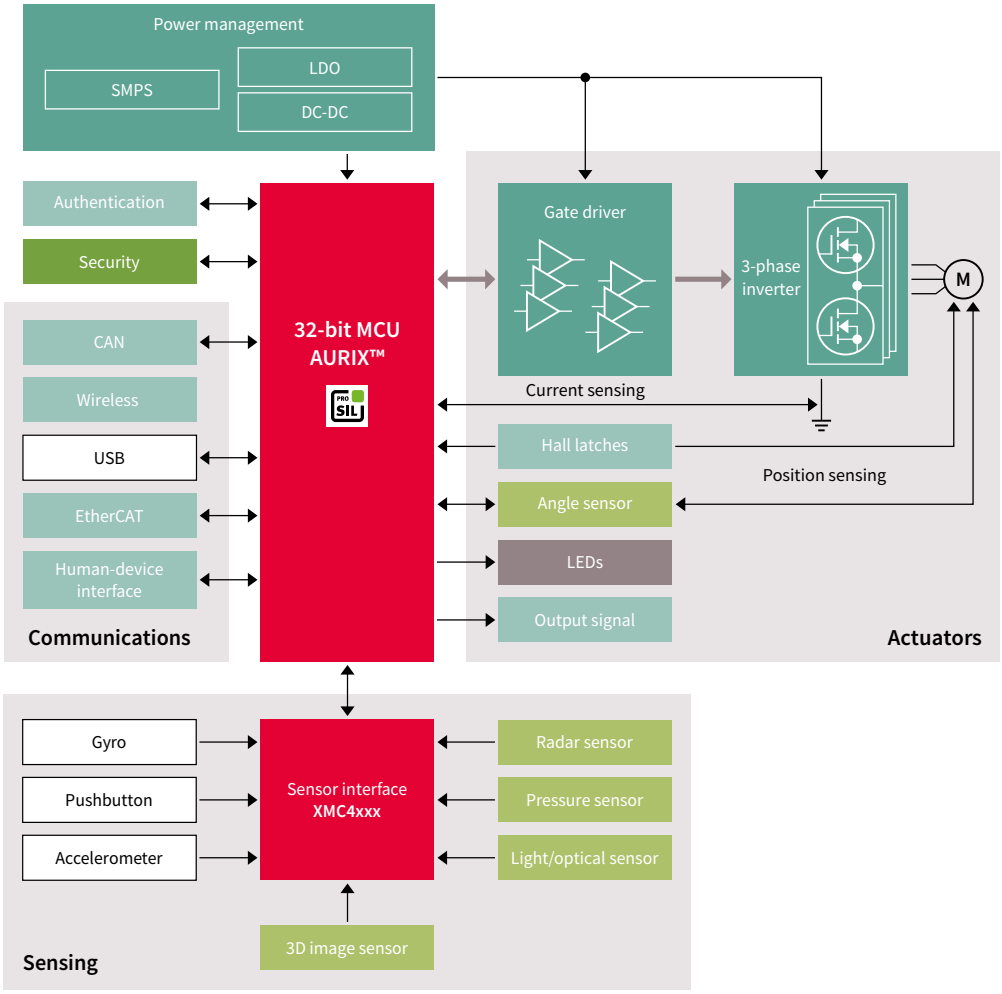

For more details on the product, click on the part number or contact our product support.

Microcontroller PDH partner

Preferred Design Houses (PDH) and software resellers – AURIX™ Traveo and PSoC, AURIX™ tools and software

AURIX™ Tools and Software

To enable customers to achieve optimal performance when using the powerful AURIX™ architecture, Infineon has built up a network of strong partnerships with companies highly specialized in multicore software development. Infineon's multicore partners can offer the best multicore expertise and tools on the market for each stage of the software design process, covering everything from the initial multicore knowledge acquisition phase right up to final optimization of the multicore software.

AURIX™ Embedded Software

- AURIX™ Applications software
- Autosar
- Non-Autosar OS/RTOS
- Middleware
- Communication and connectivity
- Bootloader/OTA
- Safety

AURIX™ Tools

- AURIX™ Free Tools
- Calibration/Measurement/Prototyping
- Compilers
- Debugger, Test Tools
- Flash Tools
- Simulation/Modelling
- SW Automation/Autocoding

For more details on the product, click on the part number or contact our product support.

Classic (Free of charge)	› 1st level customer support covering Infineon products/solutions › Technical interface and support to the customer	› Driving design at customer › Basic training for design teams at customer › 24 h response time to the customer
Premium (Consultancy mode) To be agreed between customers and PDH	› Project management and project-specific application support › Specification of general software architecture, defining required layers, control and data flow structure etc. › Specification and implementation of custom device drivers › Optimization of software components with regard to speed/code size	› Software testing › Support for project-specific functional safety engineering › Project-specific support for security solution › Safety support › Security support › Multicore support

Preferred Design Houses (PDH)

The preferred design house extends the support force by specifying and customizing the know-how. Furthermore, it brings an additional value for customer service. The preferred design house supports the set up for systems using AURIX™ and XMC™, including software and other Infineon products. Our partners are trained to use AURIX™ and XMC™.

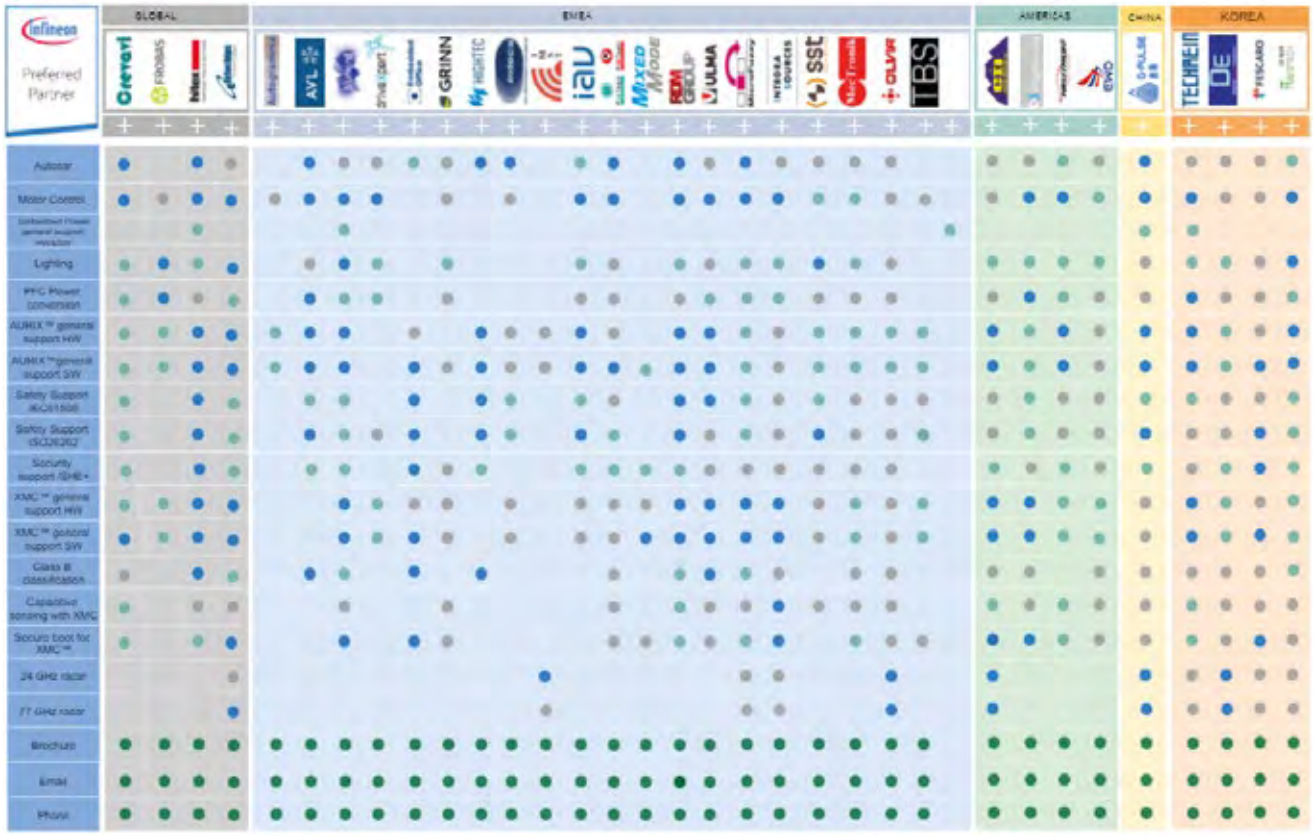

Basic ●
Essential principles and elementary know-how to support a customer; provision of basic training for design teams

Advanced ●
High-level project-specific application support/consulting

Expert ●
Extensive knowledge and ability to fully support development

TRAVEO™ II portfolio

Thanks to its special features the Traveo™ II family is the perfect match for industrial applications. With processing power and network connectivity built into a single Arm® Cortex®- M4F and dual Cortex®- M7F, the Traveo™ II family comes up with an enhanced performance up to 1500 DMIPS and a high-performance CPU operating up to 350 MHz.

Product type	Supply Voltage [V]	Main Core frequency [MHz]	Flash (Code + Work) [kB]	SRAM [kB]	GPIO	ADC Channels	CAN/CAN FD Channels	Ethernet 100/1000 Mbit	SCB Channel	CXPI Channel	SMIF (SPI/HyperBus)	LIN Channel	I²S Channel	eMMC Channels	HSM	Temperature ranges	Packages	SIL Level
TRAVEO™ II CYT2B7 series																		
CYT2B75CADQ0AZEGS	2,7 to 5,5	160	1088 + 96	128	78	39	6	no	8	0	-	7	-	0	Yes	E	100-LQFP	ASIL-B
CYT2B78CADQ0AZEGS	2,7 to 5,5	160	1088 + 96	128	152	64	6	no	8	0	-	8	-	0	Yes	E	176-LQFP	ASIL-B
TRAVEO™ CYT2B9 series																		
CYT2B95CACQ0AZEGS	2,7 to 5,5	160	2112 + 128	256	78	39	8	no	8	4	-	9	-	0	Yes	E	100-LQFP	ASIL-B
CYT2B98CACQ0AZEGS	2,7 to 5,5	160	2112 + 128	256	152	64	8	no	8	4	-	12	-	0	Yes	E	176-LQFP	ASIL-B
TRAVEO™ CYT3BB series																		
CYT3BB8CEBQ0AESGS	2,7 to 5,5	250	4160 + 256	768	148	64	8	1	10	0	1	16	TX 3ch, RX 3ch (3 instances)	1	Yes	S	176-TEQFP	ASIL-B
CYT3BBBCEBQ0BZEGS	2,7 to 5,5	250	4160 + 256	768	220	72	8	1	11	0	1	16	TX 3ch, RX 3ch (3 instances)	1	Yes	E	272-BGA	ASIL-B
TRAVEO™ CYT4BF series																		
CYT4BF8CEDQ0AEEGS	2,7 to 5,5	350	8384 + 256	1024	148	81	10	1	10	0	1	17	TX 3ch, RX 2ch (3 instances)	1	Yes	E	176-TEQFP	ASIL-B
CYT4BFCCJDQ0BZEGS	2,7 to 5,5	350	8384 + 256	1024	240	86	10	2	11	0	1	20	TX 3ch, RX 2ch (3 instances)	1	Yes	E	320-BGA	ASIL-B

TRAVEO II ™ kits

CYTVII-B-E-BB

- The CYTVII-B-E-BB is a generic base board that can be connected to compatible Traveo II entry or high-end evaluation boards so as to extend its functionality
- Connects to most CYTVII-B-E-xxx and CYTVII-B-H-xxx evaluation boards

CYTVII-B-E-176-SO

- The CYTVII-B-E-176-SO evaluation board is based on the Traveo II entry family of devices.
- Traveo™ II is CYT2B78CADES

CYTVII-B-E-1M-SK

- The CYTVII-B-E-1M-SK is a low-cost easy to use evaluation board based on the Traveo II entry family of devices.
- Traveo™ II CYT2B75CADES MCU
- Designed in an Arduino form factor so that users can connect many off-the-shelf Arduino shields to it, to expand its functionality

CYTVII-B-H-8M-320-CPU

- The CYTVII-B-H-8M-320-CPU evaluation board is based on the Traveo™ II high-end family of devices.
- Traveo™ II CYT4BFCCHCES MCU
- Audio, Ethernet, SD Card, SMIF

For more details on the product, click on the part number or contact our product support.

Embedded Power ICs

System-on-chip solution for motor control applications

Infineon's Embedded Power ICs include a 32-bit Arm® Cortex®-M microcontroller, a voltage regulator, the communication interfaces, along with the driving stages for motor control applications. These system-on-chip solutions offer an unmatched level of integration of all functions required to sense, control and actuate a motor. They save space and energy, improve the overall system reliability through advanced diagnosis features and reduce the overall cost due to a minimum number of external components. They perfectly fit with a range of motor control applications where a small package form factor and a minimum number of external components are essential.

Criteria	TLE984x	TLE9845	TLE9850/1	TLE985x	TLE986x	TLE987x
Controller	Arm® Cortex®-M0				Arm® Cortex®-M3	
Core frequency	25-40 MHz	40 MHz			24-40 MHz	
Flash size	36 KB – 64 KB	48 KB	48/64 KB	48 KB – 96 KB	36 KB – 256 KB	
Driver stage	Relay	Half-bridge		H-bridge		B6-bridge
	Relay	PN FET half-bridge	NN FET half-bridge	N FET H-bridge		N FET B6-bridge
HV monitor inputs	4-5	5	4		0-1	
Junction temperature levels	150°C	150°C	150°C and 175°C	150°C and 175°C	150°C and 175°C	
Packages	VQFN-48-31		VQFN-48-31 VQFN-48-29	VQFN-48-31 VQFN-48-29	VQFN-48-29 and VQFN-48-31 (TQFP-48-10 planned)	

Features and benefits

Key features	Customer benefits
› Extensive diagnostics and protections embedded within the system-on-chip	› High levels of system reliability
› Minimum number of external components needed	› Reduced cost
› Platform based approach with compatible software between the product families	› Support multiple and flexible designs with minimal effort
› Data processing, actuation and sensing integrated into the product with 32-bit Arm® Cortex®-M	› Space saving
› Compact package with 7x7 mm footprint (VQFN-48/TQFP-48)	› Energy saving
› Intelligent power saving modes including stop and sleep mode and energy management for external sensors (on demand)	

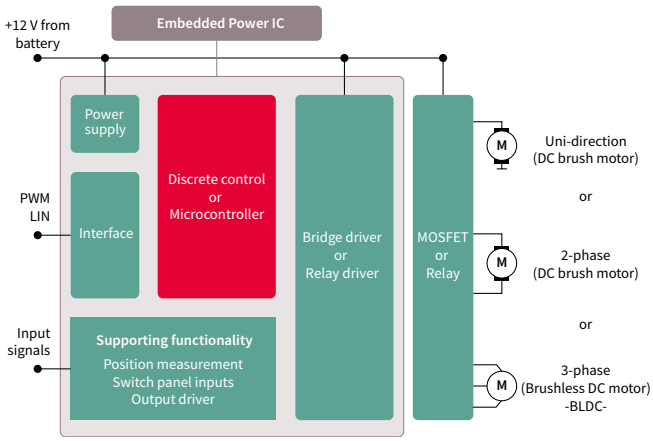

- Embedded Power ICs enable mechatronic motor control solutions for either relay, half-bridge or full-bridge DC and BLDC motor applications
- They are supported by a complete development tool chain provided by Infineon and third party vendors. The tool chain includes compilers, debuggers, evaluation boards, LIN low level drivers and configuration tools as well as variety of example software code.

BLDC Motor Control Shield for Arduino

3-phase motor control shield with TLE9879QXA40

The BLDC Shield for Arduino uses the TLE9879QXA40 chip, which is a part of the TLE987x family of the Infineon Embedded Power IC portfolio. It enables the shield to drive 3-phase BLDC motors with a variety of different features. One Arduino base board can control up to four BLDC shields via SPI. The BLDC Shield firmware provides an auto-addressing functionality. Every shield in the stack can be controlled independently and run completely different motor control algorithms if desired.

The shield implements three different advanced motor control algorithms:

- Sensorless field-oriented control (FOC),
- Block commutation with back EMF (BEMF)
- Hall based block commutation (HALL)

The firmware can be changed using the SWD Interface Additional connectors for voltage supply, motor-phases and hall sensors speed up the evaluation.

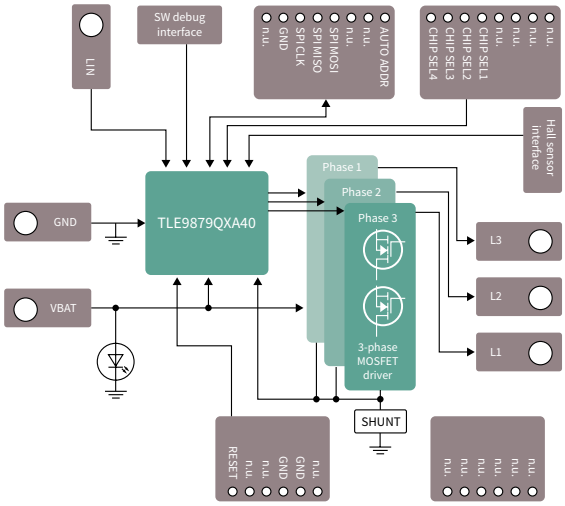

Features and benefits

Key features	Customer benefits
Implemented motor control algorithms (FOC, BEMF, Hall)	Easy to use API, allowing the user to quickly setup an application
Controlled over Arduino via SPI	
Compatible with the Arduino Uno or the Infineon XMC™ baseboard	
Up to four shields can be used simultaneously	
Each shield can be controlled independently	
Motor parameters can be set for each shield individually	High performance BLDC motor control in form of the TLE987x chip

Our BLDC Shield for Arduino comes with a library which includes a collection of code that makes it easy for you to run your project. The Arduino library offers an intuitive API to quickly setup and configure an application.

For more details on the product, click on the part number or contact our product support.

CAN-FD transceivers

High- and low-speed CAN-FD Transceivers for automotive and many other applications

Recently the automotive industry newly established the CAN-FD (Flexible Data-rate) protocol for faster CAN communication up to 5Mbit/s and CAN PN (Partial Networking) for improved energy efficiency.

Dependent on the respective network architecture and the related ECU supply path, different transceiver types are used. Infineon transceivers ensure reliable communication and help minimizing the current consumption. The products provide the best value by its high performance, ruggedness and reliability.

Features and benefits

Key features	Key benefits
› Transmission rates up to 5 Mbit/s ISO11898 compliant	› Low current consumption
› Low-power modes	
› Receive-only mode	› Excellent EMI performance & robustness
› Standby/sleep mode	
› Bus wake up	
› Thermal protection	› Pin-to-pin replacements for industry-standard parts
› CAN FD compliance	

Block diagram TLE9250V

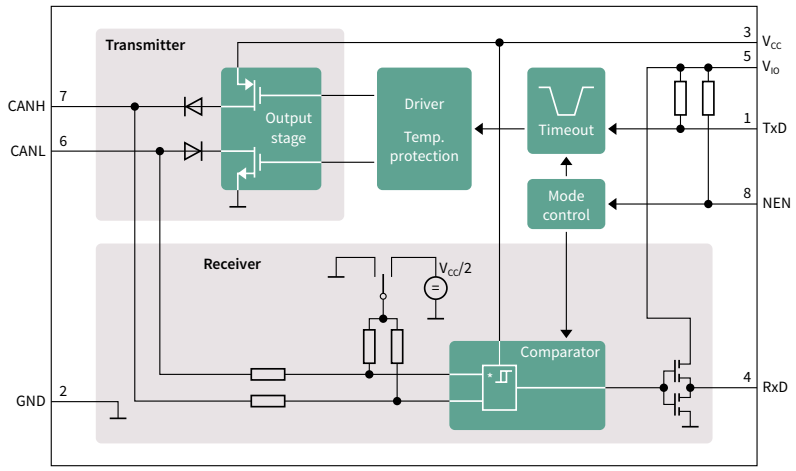

PG-DSO-8-65	PG-TSON-8-1
TLE9250SJ_GRN	TLE9250LE_GRN
TLE9250VSJ_GRN	TLE9250VLE_GRN
TLE9250XSJ_GRN	TLE9250XLE_GRN
TLE9251SJ_GRN	TLE9251LE_GRN
TLE9251VSJ_GRN	TLE9251VLE_GRN
	TLE9251VLE

For more details on the product, click on the part number or contact our product support.

Infineon support for industrial microcontrollers

One platform, countless solutions

Further information, datasheets and documents

infineon.com/xmc
infineon.com/xmc1000
infineon.com/xmc4000
infineon.com/aurix
infineon.com/makers

XMC SC Wireless power controller:

infineon.com/xmcscwirelesspowercontrollers

XMC™ MCUs ecosystem and enablement – kits, board, tools and software

Boards and kits:
infineon.com/xmc-dev
infineon.com/connectivitykit
infineon.com/ethercat

Ecosystem and tools:

infineon.com/xmc-ecosystem

DAVE™ IDE:

Infineon.com/dave

Sensors

- XENSIV™ pressure sensors for automotive
- XENSIV™ current sensors
- XENSIV™ magnetic position sensors
- XENSIV™ magnetic speed sensors
- XENSIV™ MEMS microphones for automotive
- Intuitive sensing
- XENSIV™ MEMS microphones for consumer
- XENSIV™ pressure sensors for IoT
- XENSIV™ PAS CO2
- XENSIV™ 24 GHz radar sensor ICs
- XENSIV™ 60 GHz radar sensor IC
- Shield2Go
- Sensor 2GO kits

Infineon XENSIV™ – sensing the world

Infineon XENSIV™ sensors are exceptionally precise thanks to industry-leading technologies. They are the perfect fit for various customer applications in automotive, industrial and consumer markets.

From the world leader in sensing technology, XENSIV™ sensors smartify lives by enabling “things” to “see”, “hear”, “feel”, “smell” and therefore intuitively “understand” their environment. As a result of proven quality and outstanding reliability, customers can rely on XENSIV™ for system stability, durability and integrity. Providing high accuracy and best-in-class measurement performance, XENSIV™ sensors add great value to customer applications. More than 40 years of experience in sensing solutions and a deep-rooted system understanding result in the broadest portfolio of ready-to-use sensor solutions on the market. Ecosystem partners and our customers partner with us for leading technologies, perfect-fit solutions and continuous innovation.

In the Internet of Things, sensors are omnipresent and mark the starting point of each and every IoT system. They collect all kinds of data on their surroundings, providing the entry point for all subsequent functions and features. Building on its well-founded systems expertise, Infineon’s broad portfolio in the XENSIV™ family contains ready-to-use solutions to enable a fast time-to-market and reliable functionality for applications in the area of smart home & smart building, smart things, smart factory or smart cars.

Today, we are already inspiring the next generation of smart environments, capable of understanding and responding to human communication. Infineon’s semiconductors are at the very heart of machine-to-machine (M2M), human-machine interface (HMI), mobile and wireless infrastructure technologies. As the technological boundary between humans and machines gradually disappears, these devices need even more advanced intelligence, enriched with voice assistance capabilities and the latest sensor fusion innovations, not to mention robust security technologies to protect personal data. Infineon’s sensors and microphones are already delivering this intelligent functionality and inspiring the next step in mobile connectivity.

348

Absolute pressure sensors (MAP and BAP)

Infineon's pressure sensors offer the highest quality and accuracy for safety-relevant automotive, industrial, or consumer lifestyle applications. Typical safety-related automotive pressure sensing applications such as side-impact and pedestrian protection call for the highest quality and accuracy standards with full ISO 26262 compliance. Our XENSIV™ family includes integrated pressure sensors that tick all these boxes with PSI5 peripheral sensor interfaces for a safety-critical use case. Discover our highlight product dedicated to 2-wheelers: KP212 enables lower CO_2 emissions, as well as lower fuel consumption, which makes it the right fit product worldwide to fulfill emission regulation requirements such as CN6 and Bharat 6. Of course, these sensors can also be used in industrial control, consumer applications, as well as medical applications.

KP21x/KP22x – Analog manifold air pressure sensor IC family (MAP + turbo MAP)

Features

- Manifold air pressure measurement – MAP and turbo MAP
- Excellent accuracy of up to 1.0 kPa over a large temperature range
- Ratiometric analog voltage output proportional to the applied pressure
- Output signal fully compensated over pressure and temperature
- Pressure range from 10 to 400 kPa
- Temperature range from -40 to +140°C
- Output clamping (optional)
- Complete product family available with multiple transfer function
- Reverse polarity protection
- Green SMD package

KP23x – Analog barometric air pressure (BAP) sensor IC family

Features

- Absolute air pressure measurement
- Excellent accuracy of 1.0 kPa over a large temperature range
- Ratiometric analog voltage output proportional to the applied pressure
- Output signal fully compensated across pressure and temperature range
- Pressure range from 40 to 165 kPa
- Temperature range from -40 to +125°C
- Serial service interface
- Open bond detection (OBD) for supply and GND
- Inverse polarity protection
- Green SMD package

KP25x/KP264 – Digital barometric air pressure (BAP) sensor IC family

ISO 26262 ready

Features

- Absolute air pressure measurement
- Excellent accuracy of 1.0 kPa over a large temperature range
- Real 10-bit pressure resolution
- Integrated temperature sensor
- Real 10-bit temperature resolution
- Power-down mode for reduced power consumption
- Self diagnosis features
- Output signal fully compensated across pressure and temperature range
- Pressure range from 40 to 165 kPa
- Temperature range from -40 to +125°C
- Green SMD package

For more details on the product, click on the part number or contact our product support.

349

KP276
Media robust MAP sensor with digital interface

Features

- Media robustness for current automotive requirements
- Digital single edge nibble transmission (SENT) interface (282 clock ticks)
- Excellent accuracy of ±0.77 percent FSS
- Green SMD package
- Temperature range -40 to +170°C
- Integrated NTC temperature sensor functionality with fast start up time (typ. 10ms)

Block diagram

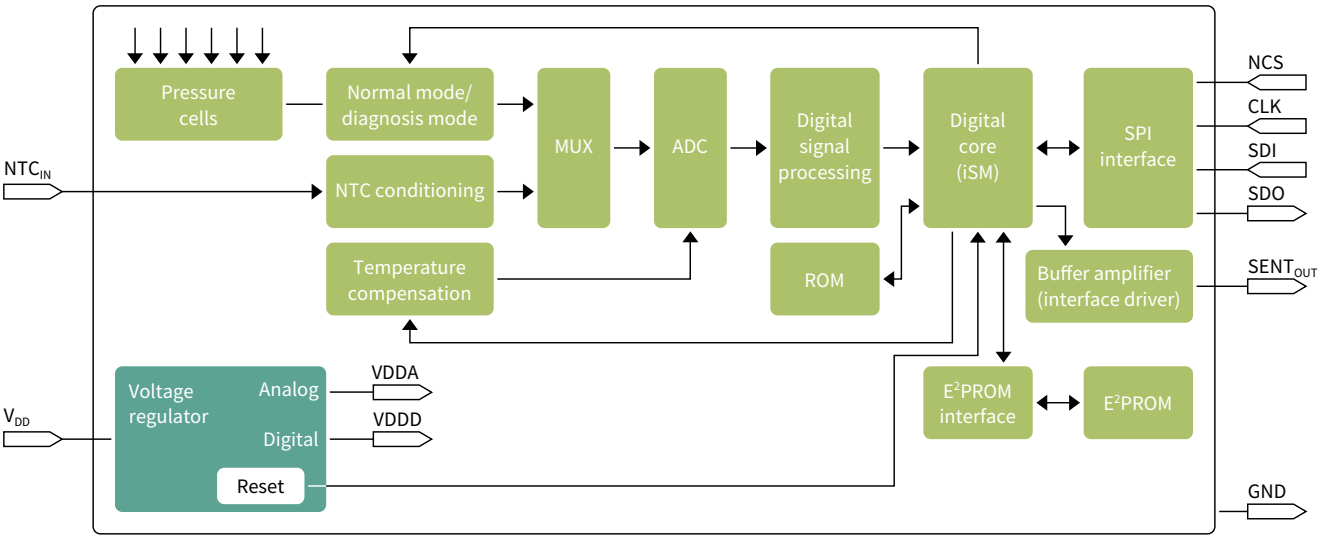

Integrated pressure sensor ICs for manifold and barometric air pressure

Product	Pressure range [kPa]	Max. accuracy [kPa]	Max. operating temperature [°C]	Automotive	Industrial
KP21x *	10 ... 150	1.0	140	✓	✓
KP22x *	10 ... 400	2.5	140	✓	✓
KP23x *	15 ... 115	1.0	125	✓	✓
KP236N6165	60 ... 165	1.0	125	✓	✓
KP253	60 ... 165	1.0	125	✓	✓
KP254	40 ... 115	1.5	125	✓	✓
KP255 *	10 ... 125	1.4	140	✓	✓
KP256	60 ... 165	1.0	125	✓	✓
KP264	40...115	1.5	125	✓	✓
KP276 *	10...400	3.0	170	✓	✓

*For more information on the product, contact our product support

For more details on the product, click on the part number or contact our product support.

350

High-precision coreless current sensors for industrial applications

Infineon's current sensors provide accurate and stable current measurement up to 120 A. The products are intended for use in high-voltage industrial applications such as electric drives, photovoltaic inverters, chargers and power supplies. The coreless open-loop sensors are based on Infineon's precise and stable Hall technology. Thus, the output signal is highly linear over temperature and lifetime. Due to a lack of an iron core, the sensor signal doesn't show hysteresis and it doesn't suffer from saturation. Thanks to the integrated current rail there is no need for external calibration. The differential measurement with two Hall cells ensures high accuracy even in a noisy environment with cross-talk from adjacent current lines or magnetic stray fields. Highlights of the XENSIV™ TLI4971 include best-in-class thermal performance for high currents as a result of its innovative TISON-8 package as well as isolation against high voltages. The two output pins for fast overcurrent signals can be used for pre-warning and system shut-down. Designers can program the threshold levels of the overcurrent signals and thus adapt them to individual requirements without any external components.

Features

- Integrated current rail with typical 220 µΩ insertion resistance enables ultralow power loss
- Small form factor, 8x8 mm SMD, for easy integration and board area saving
- Highly accurate, scalable, DC and AC current sensing
- Bandwidth of 240 kHz enables wide range of applications
- Very low sensitivity error over temperature (< 2.5%)
- Excellent stability of offset over temperature and lifetime
- Galvanic functional isolation up to 1150 V peak VIORM; partial discharge capability of at least 1200 V; 4 mm clearance and creepage
- Differential sensor principle ensures superior magnetic stray field suppression
- Two independent fast over-current detection (OCD) pins with configurable thresholds enable protection mechanisms for power circuitry (typical < 1.5 µs)
- Pre-calibrated sensor

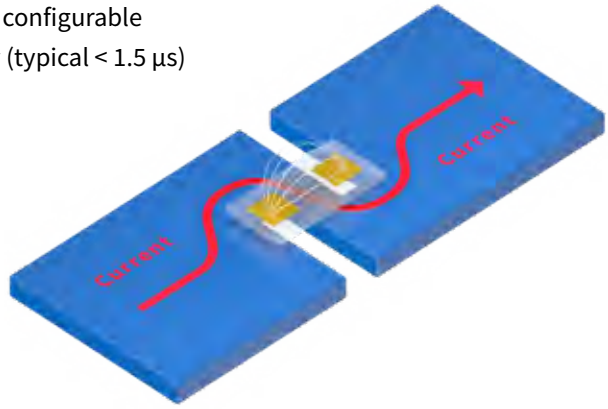

Applications

- Electrical drives (up to 690 V)
- Photovoltaic inverter
- General purpose & GAN based inverters
- Chargers
- Power supplies

Product	Max. Error[1]	Current range [A]	Bandwidth [kHz]	Sensitivity [mV/A]	Certification	Industrial	Supply [V]	Package
TLI4971-A025T5-U-E0001	3.45%	25	240 kHz typ.	48	UL	✓	3.3	PG-TISON-8
TLI4971-A025T5-E0001	3.45%	25	240 kHz typ.	48	–	✓	3.3	PG-TISON-8
TLI4971-A050T5-U-E0001	3.45%	50	240 kHz typ.	24	UL	✓	3.3	PG-TISON-8
TLI4971-A050T5-E0001	3.45%	50	240 kHz typ.	24	–	✓	3.3	PG-TISON-8
TLI4971-A075T5-UE0001	3.45%	75	240 kHz typ.	16	UL	✓	3.3	PG-TISON-8
TLI4971-A075T5-E0001	3.45%	75	240 kHz typ.	16	–	✓	3.3	PG-TISON-8
TLI4971-A120T5-U-E0001	3.45%	120	240 kHz typ.	10	UL	✓	3.3	PG-TISON-8
TLI4971-A120T5-E0001	3.45%	120	240 kHz typ.	10	–	✓	3.3	PG-TISON-8

1) Total error over lifetime and temperature

For more details on the product, click on the part number or contact our product support.

351

Hall switches

The energy-saving option with excellent accuracy, robustness, and quality

TLE/TLI/TLV4961/64/6: Energy-efficient Hall switch family for up to 32 V

The TLE/TLI/TLV496x-xM/L family of Hall switches saves energy and enables designers to create precise, compact systems. With an operational current consumption of just 1.6 mA, TLE/TLI/TLV496x-xM/L products can cut energy consumption up to 50 percent compared with similar competitor products. Thanks to its small magnetic hysteresis, the family paves the way for precise switching points in systems. The integrated temperature profile compensates magnetic drifts and enables stable performance over temperature and lifetime. TLE/TLI/TLV496x-xM products come in the small SOT23 package. The sensors also feature an integrated functionality test for better system control.

Features

- Current consumption of just 1.6 mA
- 3 to 32 V supply voltage range (over voltage up to 42 V)
- 7 kV ESD protection (HBM)
- Overtemperature and overcurrent protection
- Temperature compensation
- Smallest SOT23 package
- Dedicated products for industrial applications (TLI496x)
- AEC-Q100 qualified
- Electrical drives

Applications

- Window lifter (index counting)
- Power closing (index counting)
- Gear stick (position detection)
- Seat belt (position detection)
- BLDC commutation (e.g. wiper seat belt pretentioner, pump, seating)
- Service robots
- Power tools
- White goods
- Electrical drives

Product	Type	Operating point B_{OP}	Release point B_{RP}	Hysteresis ΔB_{HY}	Automotive	Industrial	Consumer	Package
TLE4961-1M/L	Latch	2.0	-2.0	4.0	✓	✓	✓	SOT23/SSO-3-2
TLE4961-2M	Latch	5.0	-5.0	10.0	✓	✓	✓	SOT23
TLE4961-3M/L	Latch	7.5	-7.5	15.0	✓	✓	✓	SOT23/SSO-3-2
TLE4964-1M	Switch	18.0	12.5	5.5	✓	✓	✓	SOT23
TLE4964-2M	Switch	28.0	22.5	5.5	✓	✓	✓	SOT23
TLE4964-3M	Switch	12.5	9.5	3.0	✓	✓	✓	SOT23
TLE4964-5M	Switch	7.5	5.0	2.5	✓	✓	✓	SOT23
TLE4968-1M/L	Bipolar	1.0	-1.0	2.0	✓	✓	✓	SOT23/SSO-3-2
TLE4961-5M	Latch	15.0	-15.0	30.0	✓	✓	✓	SOT23
TLE4961-4M	Latch	10.0	-10.0	20.0	✓	✓	✓	SOT23
TLE4964-4M	Switch	10.0	8.5	1.5	✓	✓	✓	SOT23
TLE4964-6M	Switch	3.5	2.5	1.0	✓	✓	✓	SOT23
TLV4964-1M	Switch	18.0	12.5	5.5	–	–	✓	SOT23
TLV4964-2M	Switch	28.0	22.5	5.5	–	–	✓	SOT23
TLI4961-1M/L	Latch	2.0	-2.0	4.0	–	✓	✓	SOT23/SSO-3-2
TLV4961-3M	Latch	7.5	-7.0	15.0	–	–	✓	SOT23

For more details on the product, click on the part number or contact our product support.

352

TLE/TLI4963/65-xM
5 V high-precision automotive/industrial Hall-effect sensors

By offering an excellent magnetic behavior Infineon's switches are ideally suited for:

- Index counting application with a pole wheel
- Rotor position detection (BLDC motors)
- Open/close detection

Features

- 3.0 to 5.5 V operating supply voltage
- Low current consumption 1.4 mA
- ESD protection 4 kV HBM
- Active error compensation (chopped)
- High stability of magnetic thresholds
- Low jitter (typ. 0.35 µs)
- Operating temperature range:
  - from -40 to +170°C (TLE496x-xM)
  - from -40 to +125°C (TLI496x-xM)
- Small SMD package SOT23
- TLE: AEC-Q100 qualified
- TLI: JESD47 qualified

Product	Type	Operating point B_{OP}	Release point B_{RP}	Hysteresis ΔB_{HY}	Automotive	Industrial	Package
TLE4963-1M	Latch	2.0	-2.0	4.0	✓	–	SOT23
TLE4963-2M	Latch	5.0	-5.0	10.0	✓	–	SOT23
TLE4965-5M	Unipolar switch	7.5	5.0	2.5	✓	–	SOT23
TLI4963-1M	Latch	2.0	-2.0	4.0	–	✓	SOT23
TLI4963-2M	Latch	5.0	-5.0	10.0	–	✓	SOT23
TLI4965-5M	Unipolar switch	7.5	5.0	2.5	–	✓	SOT23

TLV496x-xTA/B
Precision Hall-effect sensor for consumer applications in leaded package

Features

- 3.0 to 26 V operating supply voltage
- Low current consumption 1.6 mA
- ESD protection 4 kV HBM
- Operating temperature range from -40 to +125 °C
- Leaded package TO92S

Applications

- BLDC motor commutation for consumer devices (e.g. e-bikes, fans, aircons)
- Position detection e.g. flaps and control buttons

Product	Type	Operating point B_{OP}	Release point B_{RP}	Hysteresis ΔB_{HY}	Consumer	Industrial	Package
TLV4961-1TA	Latch	2.0	-2.0	4.0	✓	TO92S-3-1	TO92S-3-1
TLV4961-1TB	Latch	2.0	-2.0	4.0	✓	TO92S-3-2	TO92S-3-2
TLV4961-3TA	Latch	7.5	-7.5	15.0	✓	TO92S-3-1	TO92S-3-1
TLV4961-3TB	Latch	7.5	-7.5	15.0	✓	TO92S-3-2	TO92S-3-2
TLV4964-4TA	Unipolar switch	10.0	8.5	1.5	✓	TO92S-3-1	TO92S-3-1
TLV4964-4TB	Unipolar switch	10.0	8.5	1.5	✓	TO92S-3-2	TO92S-3-2
TLV4964-5TA	Unipolar switch	7.5	5.0	2.5	✓	TO92S-3-1	TO92S-3-1
TLV4964-5TB	Unipolar switch	7.5	5.0	2.5	✓	TO92S-3-2	TO92S-3-2
TLV4968-1TA	Latch	1.0	-1.0	2.0	✓	TO92S-3-1	TO92S-3-1
TLV4968-1TB	Latch	1.0	-1.0	2.0	✓	TO92S-3-2	TO92S-3-2

For more details on the product, click on the part number or contact our product support.

353

TLx4966
Two-in-one double Hall sensor

Features
- Two Hall probes for information on speed and direction
- Excellent matching between the two Hall probes
- Hall plate distance of 1.45 mm
- High resistance to mechanical stress by Active Error Compensation
- TSOP6 package
- TLE: AEC-Q100 qualified
- TLI: JESD47 qualified

Applications
- Window lifter
- Sunroof
- Automatic tailgate
- Automated doors
- Sun blinds
- Garage doors

Product	Production samples	Temperature range [°C]	Operating voltage [V]	Magnetic thresholds	Output	Comment	Package
TLI4966G	Available	-40 to +125	2.7–24	Bop: +7.5 mT Brp; -7.5 mT	Speed and direction	› Horizontal Hall plates › For industrial applications › SMD package	TSOP6-6
TLE4966G	Available	-40 to +150	2.7–24	Bop: +7.5 mT Brp; -7.5 mT	Speed and direction	› Horizontal Hall plates › SMD package	TSOP6-6
TLE4966-2G	Available	-40 to +150	2.7–24	Bop: +7.5 mT Brp; -7.5 mT	Speed and speed	› Horizontal Hall plates › SMD package	TSOP6-6
TLE4966-3G	Available	-40 to +150	2.7–24	Bop: +2.5 mT Brp; -2.5 mT	Speed and direction	› Horizontal Hall plates › SMD package	TSOP6-6
TLE4966V-1G	Available	-40 to +150	3.5–32	Bop: +2.5 mT Brp; -2.5 mT	Speed and direction	› Horizontal Hall plates › SMD package	TSOP6-6
TLE4966L	Available	-40 to +150	2.7–24	Bop: +7.5 mT Brp; -7.5 mT	Speed and direction	› Horizontal Hall plates › Leaded package	PG-SSO-4-1

For more details on the product, click on the part number or contact our product support.

354

Linear Halls

TLE499x family: programmable analog/digital linear Hall sensor family

Infineon's family of TLE499x linear Hall ICs is tailored to the needs of highly accurate angular and linear position detection and current measurement applications. Each product measures the vertical component of a magnetic field and outputs a signal that is directly proportional to the magnetic field. These programmable linear Hall sensors come with different interface options: TLE4997 features ratiometric analog output, while TLE4998P comes with pulse width modulation (PWM), TLE4998S with single edge nibble transmission (SENT), and TLE4998C with short PWM codes (SPC). These high-precision 12-bit resolution linear Hall sensors feature EEPROM memory for flexible programming across a wide range of parameters.

Thanks to digital signal processing based on a 20-bit DSP architecture plus digital temperature compensation, these sensors deliver outstanding temperature stability compared with similar compensation methods. TLE4998 also includes stress compensation to withstand stress effects from the package, such as moisture, thus ensuring best-in-class accuracy over the device's lifetime.

Features

- Best-in-class accuracy with low drift of output signal temperature range lifetime (including stress compensation in TLE4998)
- Programmable transfer function (gain, offset), clamping, bandwidth, and temperature characteristics
- AEC-Q100 qualified
- Available in various packages including SSO-3-9 with two integrated capacitors to improve ESD and ESC behavior
- Dual-die SMD package
- TLE4997, TLE4998 ISO 26262-ready
- TLE4999 fully ISO 26262-compliant for highest ASIL-levels

Applications

- Detecting linear and angular position
- Detecting pedal and throttle position
- Steering torque measurement
- Headlight leveling
- High-current sensing
- Seat position and occupant detection
- Suspension control
- Detecting gear stick/lever positions
- Detecting liquid levels in fuel tanks
- Current sensing e.g. for battery management

Product	Programmable	Number of pins	Sensitivity (programmable range)	Magnetic offset	Supply voltage (extended range)	Automotive	ISO 26262	Interface	Package
TLE4997	EEPROM	3/Single die SMD 8	±12.5 to ±300 mV/mT	< ±400 µT	5 V ±10% (7 V)	●	--	Analog	SSO-3-10 TDSO-8
TLE4998P	EEPROM	3/4/Single die SMD 8	±0.2 to ±6%/mT	< ±400 µT	5 V ±10% (16 V)	●	Ready	PWM	SSO-3-10 SSO-4-1 SSO-3-9 (2 capacitors) TDSO- 8
TLE4998S	EEPROM	3/4/Single die SMD 8	±8.2 to ±245 LSB_{12}/mT	< ±400 µT	5 V ±10% (16 V)	●	Ready	SENT	SSO-3-10 SSO-4-1 SSO-3-9 (2 capacitors) TDSO-8
TLE4998C	EEPROM	3/4/Single die SMD 8	±8.2 to ±245 LSB_{12}/mT	< ±400 µT	5 V ±10% (16 V)	●	Ready	SPC	SSO-3-10 SSO-4-1 SSO-3-9 (2 capacitors) TDSO-8
TLE4999I3	EEPROM	3	±73.72 to ±147.44 * LSB_{13}/mT	< ±300 µT	5.5–7 V ±10% (16 V)	●	Compliant	PSI5	SSO-3-12
TLE4999C8	EEPROM	Single die SMD 8	±36.85 to ±73.7 LSB12/mT	< ±300 µT	5 V ±10% (16 V)	●	Compliant	SPC	TDSO-8

ISO 26262 compliant ISO 26262 ready

For more details on the product, click on the part number or contact our product support.

355

Dual linear Halls

Two sensors in one SMD package

The SMD package (TDSO) includes two independent sensors with separate power supplies and separate signal outputs. Due to special mounting technology, Infineon can keep dual-sensor package sizes very small to enable compact PCB layouts and small magnet sizes.

Infineon offers a wide range of Hall sensors in the TDSO package. The combination of two sensors in one package offers sensors redundancy, a feature that is especially interesting for new generation EPS steering systems with increased ISO 26262 requirements and other safety-critical applications. All sensors are automotive qualified.

Most products are also available as a single-sensor solution with only one sensor. The newest member of the TLE499x family, the TLE4999I3, is a fully ISO 26262-compliant linear Hall sensor that includes 2 sensor channels on one chip. The SSO-3 package allows PCB-less application flexibility and the PSI5 interface enables low EMI at high-speed communication with minimum wiring.

Features

- Two sensors in one package
- Separate power supply and signal output
- AEC-Q100 qualified
- Temperature range from -40 to +125°C
- Outstanding quality
- Single-sensor versions available
- 16-pin and 8-pin versions available
- ISO 26262-ready
- TLE4999I3 ISO 26262-compliant

Automotive applications

- Steering torque systems
- Pedal position
- Any other safety-critical application

Product	Interface	Dual-/ single-sensor available	ISO 26262	Package
TLE4997A8D	Analog	yes/yes	Ready	TDSO-8
TLE4998P8D	PWM	yes/yes	Ready	TDSO-8
TLE4998S8D	SENT	yes/yes	Ready	TDSO-8
TLE4998C8D	SPC	yes/yes	Ready	TDSO-8
TLE4999I3	PSI5	monolithic *	Compliant	SSO-3
TLE4999C8(4)	SPC	monolithic *	Compliant	TDSO-8

* 2 sensor channels on one chip

ISO 26262 compliant

ISO 26262 ready

For more details on the product, click on the part number or contact our product support.

356

Angle sensors

Compact designs in small outline packages

Highest variety - low end to high end, standardized and specialized in all four magnetic technologies: Hall, GMR, AMR and TMR

Infineon's magnetic sensor products TLE5501, are fast analog TMR-based angle sensors dedicated to automotive applications. Their fields of use range from steering angle applications, with the highest functional safety requirements, to motors for wipers, pumps and actuators, and electric motors in general. They are also ready to be used in industrial and consumer applications like robotics or gimbal. Angle sensors detect the orientation of an applied magnetic field by measuring sine and cosine angle components with monolithically integrated magnetoresistive elements.

Infineon's iGMR sensors are ideal for applications with a wide-angle range, such as BLDC motors or steering sensors. They are pre-calibrated and ready to use. Different levels of signal processing integration enable designers to optimize system partitioning. The XENSIV™ iAMR sensors also perfectly fit applications with the highest accuracy requirements, as they offer the best performance over temperature, lifetime, and magnetic field range.

iGMR, iAMR and iTMR based angle sensors

Diverse redundant sensor with analog and digital interface

Product	Technology	Die configuration	ISO 26262	Sin/cos output	Angle output	Second interface	Accuracy	Package
TLE5009 *	GMR	Single die	Ready	Analog sin/cos	–	–	0.9°	DSO-8
TLE5009A16(D) *	GMR	Dual die	Ready	Analog sin/cos	–	–	1.0°	TDSO-16
TLE5011	GMR	Single die	Ready	SSC (SPI)	–	–	1.6°	DSO-8
TLI5012B *	GMR	Single die	QM	SSC (SPI)	SSC (SPI)	PWM/IIF/SPC/HSM	1.9°	DSO-8
TLE5012B(D) *	GMR	Single and dual die	Ready	SSC (SPI)	SSC (SPI)	PWM/IIF/SPC/HSM	1.0°	DSO-8/ TDSO-16
TLE5014C16(D)	GMR	Single and dual die	Compliant	–	SPC	–	1.0°	TDSO-16
TLE5014P16(D)	GMR	Single and dual die	Compliant	–	PWM	–	1.0°	TDSO-16
TLE5014S16(D)	GMR	Single and dual die	Compliant	–	SENT	–	1.0°	TDSO-16
TLE5014SP16(D) *	GMR	Single and dual die	Compliant	–	SPI	–	1.0°	TDSO-16
TLE5109A16(D) *	AMR	Single and dual die	Ready	Analog sin/cos	–	–	0.5°	TDSO-16
TLE5309D *	AMR + GMR	Dual die	Ready	Analog sin/cos	SSC (SPI)	–	AMR 0.5°, GMR 1.0°	TDSO-16
TLE5501 *	TMR	Single die	Compliant	Analog sin/cos	–	–	1.0°	DSO-8

SPI = Serial peripheral interface
IIF = Incremental interface
PWM = Pulse width modulation

ISO 26262 compliant

ISO 26262 ready

*For more information on the product, contact our product support

For more details on the product, click on the part number or contact our product support.

357

iTMR

iTMR based angle sensors

Tunneling Magneto Resisitive (iTMR) technology is offering high sensing sensitivity with a high output voltage, reducing the need for an internal amplifier. Thus, the sensor can be connected directly to the microcontroller without any further amplification. In addition, iTMR technology shows a very low temperature drift, reducing external calibration and compensation efforts. The iTMR technology is also well known for its low current consumption.

TLE5501

With the TLE5501 products, Infineon is currently launching the first angle sensor products based on iTMR technology. TLE5501 is available in two versions.

TLE5501 - product versions with different pinout:

- TLE5501 E0001: pin-compatible to TLE5009 automotive qualified acc. AEC-Q100
- TLE5001 E0002: decoupled bridges for redundant external angle calculation and highest diagnostic coverage, realizing ISO 26262-compliant development ASIL D

Features

- Large output signals of up to 0.37 V/V for direct microcontroller connection
- Discrete bridge with differential sine and cosine output
- Very low supply current: ~2 mA
- Magnetic field range (20-100 mT)
- Typ. angle error ~ 1.0 ° (overtemperature and lifetime)
- DSO-8 package
- AEC-Q100, grade 0: TA = -40°C to 150°C (ambient temperature)
- For TLE5501 E0002:
  - Reaching ASIL D with just one single sensor chip
  - ISO 26262-compliant development ASIL D

Applications

- Steering angle sensor
- BLDC motor commutation (e.g. wipers, pumps and actuators)
- Angular position sensing for e.g. robotics or gimbal
- Electric motors
- Industrial automation
- Safety applications

For more details on the product, click on the part number or contact our product support.

358

TLE5014(D)

Digital iGMR sensor with an easy-to-use plug-and-play concept for the highest functional safety applications

All XENSIV™ TLE5014 angle sensors are available as single and dual die products. The products come pre-configured and pre-calibrated as plug-and-play sensors and are easy to use. Customers can choose between the interfaces SENT, PWM, SPC, and SPI. On top of those protocol options, the sensors can be adapted to any kind of application setup via their programmable E²PROM interfaces. TLE5014 magnetic angle sensors meet ISO 26262 ASIL C for the single die and ISO 26262 ASIL D for the dual die versions. All products are ready for applications with the highest functional safety requirements. The sensors show an extremely small angle error of less than 1° across the entire temperature profile and lifetime. This is particularly helpful in applications with the need for very accurate position sensing such as steering angle sensing or motor commutation. Further application areas range from rotor position measurement, electric power steering (EPS), pedal position to any other kind of position measurement.

Features

- Easy-to-use, plug-and-play sensors, pre-configured and pre-calibrated
- Offering high flexibility:
  - Available as single and dual die products
  - 12 bit digital interface with protocol options PWM, SENT, SPC and SPI
  - E2 PROM and look-up table for customer configuration and calibration
- High angle accuracy: max. 1.0° over temperature and lifetime
- High voltage capability up to 26 V
- Development fully compliant with ISO 26262
  - Developed acc. ASIL D level
  - Dual die sensors reaching ASIL D, single die sensors ASIL C metrics
- Safety manual and safety analysis summary report available on request

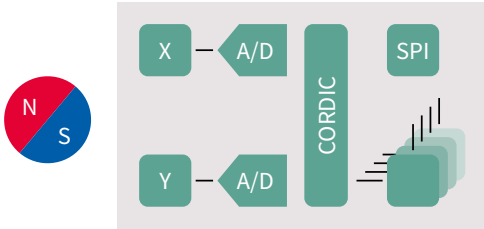

Applications

- Steering angle sensing (SAS)
- Motor commutation
- Rotor position measurement
- Pedal position
- Safety applications
- Any other kind of high-accuracy position measurement

TLE5109A16(D)

Analog iAMR sensor with temperature compensation

Features

- Features a differential or single-ended analog interface for sine and cosine values
- Internal temperature drift compensation for gain and offset
- Also available as a dual-sensor package
- ISO 26262-ready
- Typical 0.1” angle error over lifetime and temperature range after compensation (max 0.5”)
- Available as single and dual die product

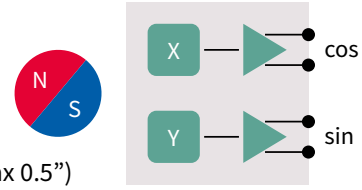

*Giant Magneto resistance

For more details on the product, click on the part number or contact our product support.

359

3D magnetic sensors

TLV493D-A1B6/TLI493D-A2B6/TLI493D-W2B6 for consumer and industrial market

The TLV493D-A1B6 sensor realizes accurate three-dimensional sensing with extremely low power consumption in a small 6-pin package. Capable of detecting the magnetic field in the x, y, and z-direction, the sensor is ideally suited for the measurement of linear, rotation, or 3-dimensional movements. Thanks to its small package and low power consumption, the TLx493D-AxB6 can be used in new applications, replacing potentiometer and optical solutions. Featuring contactless position sensing and high-temperature stability of the magnetic threshold, the sensor allows systems to get smaller, more accurate, and more robust.

Rotation movement

3D movement

Linear movement

Features

- 3D magnetic sensing
- Integrated temperature sensing
- Low current consumption
  - 7 nA in power-down mode
  - 10 µA in ultralow power mode
- 2.8 to 3.5 V operating supply voltage
- Digital output via a 2-wire standard I²C interface
- B_x, B_y and B_z linear field measurement up to ±160 mT
- JESD47 qualified
- 12-bit data resolution for each measurement direction
- Various resolution options from 65 µT/LSB to 130 µT
- Operating temperature range from -40 to +125°C

Product	Temperature range	Qualification	Linear magnetic range	Resolution	I_{DD}	Update rate	Package	Ordering code
TLV493D-A1B6	-40…125°C	JESD47	±130 mT (typ)	10.2 LSB12/mT	7 nA – 3.7 mA	10 Hz – 3.3 kHz	TSOP6	SP001286056
TLI493D-A2B6	-40…105°C	JESD47	±160 mT (min) ±100 mT (min)	7.7 or 15.4 LSB12/mT	7 nA – 3.3 mA	10 Hz – 8.4 kHz	TSOP6	SP001689844
TLI493D-W2BW A0 TLI493D-W2BW A1 TLI493D-W2BW A2 TLI493D-W2BW A3	-40...125°C	JESD47	±50, ±100 or ±160 mT	7.7, 15.4 or 30.8 LSB12/mT	7 nA – 3.4 mA	0,05 Hz – 8.4 kHz	WLB	SP005409964 SP005409966 SP005409968 SP005409970
TLV493D-A2BW	-20°C…85°C	JESD47	±50, ±100 or ±160 mT	7.7, 15.4 or 30.8 LSB12/mT	7 nA – 3.4 mA	6 Hz – 11,6 kHz	WLB	SP005542151

1) Half range mode

While the TLV493D-A1B6 just supports a typical value for the linear magnetic range of ±130 mT, the TLI493D-A2B6 specification includes also a minimum value of ±160 mT.
With the TLI493D-A2B6, broader microcontroller compatibility, as well as an enhanced feature set, is included.

New features

- Sensor address read back
- Short mode range setting, focusing on the half of the magnetic range, ensuring higher accuracy
- Higher update frequency allows for an application field that requires faster update speed
- Angular mode (for x and y read-out only)

Applications

- Anti tempering protection in smart meters
- Joysticks e.g. for medical equipment, cranes,
- CCTV-control, game consoles
- Control elements e.g. white goods multifunction knobs
- Industrial joysticks
- Ergonomic push and control buttons on domestic appliances and power tools
- Position control in robotics

For more details on the product, click on the part number or contact our product support.

360

3D magnetic sensors

TLE493D-A2B6/W2B6/P2B6 for automotive low power applications

Infineon's TLE493D-x2B6 enables all kind of automotive control element applications within the passenger compartment or under the hood with a temperature range of -40 to +125°C, with linear magnetic range requirements up to ±160 mT.

Features

- 3D magnetic sensing
- Integrated temperature sensing
- 2.8 to 3.5 V operating supply voltage
- Low current consumption
  - 0.007 µA in power-down mode
  - 10 µA in ultralow power mode
  - Up to 10 power modes
- Digital output via a 2-wire standard I2C interface
- Bx, By and Bz linear field measurement ±160 mT
- AEC-Q100 qualified
- 12-bit data resolution for each measurement direction
- Various resolution options from 67 µT/LSB to 134 µT
- Operating temperature range from -40 to +125°C

Product	Temperature range	Qualification	Linear magnetic range	Resolution	I_{DD}	Update rate	Wake-up	Package	Ordering code
TLE493D-A2B6	-40 … 125°C	AEC-Q100	±160 mT (min)	130 µT/LSB (65 µT/LSB)1)	7 nA – 3.3 mA	10 Hz – 8.4 kHz	No	TSOP6	SP001689848
TLE493D-W2B6 A0 TLE493D-W2B6 A1 TLE493D-W2B6 A2 TLE493D-W2B6 A3	-40 … 125°C	AEC-Q100	±160 mT (min) ±100 mT (min)	130 µT/LSB (65 µT/LSB)1)	7 nA – 3.3 mA	0.05 Hz – 8.4 kHz	Yes	TSOP6	SP001655334 SP001655340 SP001655344 SP001655348
TLE493D-P2B6 A0 TLE493D-P2B6 A1 TLE493D-P2B6 A2 TLE493D-P2B6 A3	-40 … 125°C	AEC-Q100	±160 mT (min) ±100 mT (min)	130 µT/LSB (65 µT/LSB)1)	7 nA – 3.3 mA	0.05 Hz – 8.4 kHz	Yes	TSOP6	SP005557415 SP005557413 SP005557411 SP005557408

1) Half-range mode

The XENSIV™ sensor TLE493D-A2B6 features include a sensor address read-back feature for additional communication verification, a half range mode focusing to half of the magnetic range, ensuring higher accuracy, and an angular mode (for x and y readout only).

With the TLE493D-W2B6/ P2B6 A0-A3, a 3D sensor family with an enhanced dynamic wake-up feature was developed. Four pre-programmed address options (A0-A3) are available, enabling for a fast start-up initialization when used in I2C bus configurations. Our sensors include enhanced test options, and safety documentation is available to enable the usage of this sensor in the context of ASIL B systems.

Compared to the previous products of this family the new TLE493D-P2B6 A0-A3 family offers enhance precision in x-, y-, z- sensing direction, while otherwise featuring the same dynamic wake-up features, programmability, and test options like TLE493D-W2B6 A0-A3. We provide safety documentation on request for usage of the sensor in the context of ASIL B systems.

Applications

- Control elements for infotainment/navigation systems, air-conditions, multifunctional steering wheels, seat controls
- Top column modules e.g. direction indicator, wiper control
- Gear stick position sensing

For more details on the product, click on the part number or contact our product support.

361

Magnetic speed sensors

Easy to use, robust and cost-effective sensors for speed measurement

Infineon's Hall- and GMR-based magnetic speed sensors are designed to measure speed in safety and powertrain applications such as speedometers, ABS, camshafts/crankshafts, and automatic transmissions. They are also used in similar applications in the industrial sector. The sensors use a ferromagnetic gear tooth or encoder structure to measure linear or rotational speed and position. Hall sensor measuring rotational speed with a gear tooth and a magnetic encoder wheel. The majority of sensors also feature additional benefits such as integrated capacitorsfor high EMC robustness and the highest levels of ESD protection.

TLE4922
Highly robust, easy-to-use mono-Hall speed sensor with twist-independent mounting

This sensor is specially designed to provide an easy-to-use, robust and cost-effective solution for vehicle or industrial speed sensing applications. The TLE4922 can, therefore, be back-biased using a simple, low-cost bulk magnet, while providing a good air gap performance and switching accuracy. Its hidden adaptive hysteresis and calibration algorithm enable good accuracy over air gap jumps and immunity to vibration and run-out events.

Features

- Large operating air gap capability
- Flexible mounting (also known as Twist-independent mounting)
- Hidden adaptive hysteresis
- Low current consumption
- Reverse magnetic polarity capability
- Advanced protection technology
  - Reverse voltage protection at VS-pin
  - Short-circuit protection
  - Overtemperature protection
- Wide operating temperature ranges of -40°C ≤ Tj ≤ ±150°C
- High ESD robustness up to ±4 kV HBM
- 3-wire PWM voltage interface

Applications

- Industrial applications
- Two-wheeler and automotive vehicle speed

362

TLE4929
Fully programmable crankshaft sensor

The TLE4929 is an active Hall sensor ideally suited for crankshaft applications and similar industrial applications, such as a speedometer or any speed sensor with high accuracy and low jitter capabilities.

Features

- Differential Hall speed sensor to measure speed and position of tooth/pole wheels
- Switching point in the middle of the tooth enables backward compatibility
- Robustness over magnetic stray-field due to the differential sensing principle
- Precise miss fire detection through excellent jitter performance
- Dedicated hybrid engine algorithm keeps combustion engine calibrated during an electric drive cycle
- Digital output signal with programmable output-protocol including diagnosis interface
- Direction detection and stop-start-algorithm
- High accuracy and low jitter
- High sensitivity enables large air gap
- End-of-line programmable to adapt engine parameters
- Can be used as a differential camshaft sensor
- Automotive operating temperature range

Product	Automotive	Industrial	Sensor technology	AEC-Q100 qualified	RoHS	HAL free	Product status
TLE4922	✓	✓	Mono-Hall	✓	✓	✓	active and preferred
TLE4929	✓	✓	Differential Hall	✓	✓	✓	active and preferred

363

XENSIV™ - IM67D130A MEMS microphones for automotive applications

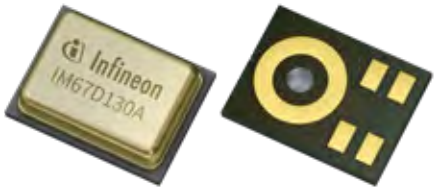

As part of our comprehensive XENSIV™ sensor family, we now also offer high-performance MEMS microphones, qualified according to the state-of-the-art automotive quality standard AEC-Q103-003. Such microphones close the gap in the automotive industry, providing the best possible fit for automotive applications. These automotive XENSIV™ MEMS microphones combine our proven expertise in the automotive industry with our technical leadership in high-end MEMS microphones. They are suited to all applications inside and outside the car, where the best audio performance in harsh automotive environments is required.

Infineon automotive MEMS microphones will revolutionize the in-cabin user experience

Speech: Hands free / e-call / ICC
Enabling distortion free audio capturing for all speech related application thanks to their high SNR and low distortions

Interior

Speech: Microphone arrays – beamforming voice command
Making possible to operate infotainment systems with voice commands due to their narrow sensitivity matching for enhanced performance of beam-forming arrays

Interior

Active and road noise cancellation
Enabling a quite environment for a comfortable trip as such microphones are a good fit for ANC applications thanks to their flat frequency and stable phase response

Interior

364

In addition, they will enhance autonomous driving features … and even allow interaction from outside of the vehicle

– Event sound detection / sirens detection / contact detection
– Road condition detection
Contributing to road safety, as they can be employed to pick up sounds like sirens from emergency vehicles or to detect dangerous road conditions thanks their large dynamic range and acoustic overload point

exterior

Voice recognition / external interaction
Allowing external interaction e.g. for controlling certain functions via voice commands due to their good suitability for voice recognition use cases

exterior

Typical applications

- Automotive qualification according to AEC-Q103, together with long term availability reduces design-in risk and effort
- Increased operating temperature range allows flexible usage in automotive environment up to +105°C
- Best in class audio performance (SNR, AOP, THD) for optimum speech quality and capture of distortion-free audio signals in loud environments as they can occur inside a car
- Narrow sensitivity matching for enhanced performance of beam-forming (noise suppression) arrays
- Flat frequency and stable phase response for optimal fit in acoustic noise cancellation use cases

365

XENSIV™ sensors for consumer and IoT applications

Intuitive sensing: giving things human-like senses for a better contextual awareness

Imagine a world where technology is unobtrusive and seamlessly integrated into our lives. Where intentional/deliberate communication between people and devices is no longer necessary. In this world, there is no need to push buttons or issue commands in order to activate devices, because technology is capable of interpreting implicit intentions and context. This enhances the user experience and makes it more natural – it almost seems like the devices around us intuitively understand what we want them to do. At Infineon, this future is already becoming reality. We develop sensor solutions that enable simple and effortless user interactions with all kinds of smart devices. Bridging the gap between the real and digital worlds, our technology is developed to make life easier, safer, greener and more efficient. Our intuitive sensing solutions are at the very core of this mission. Reflecting our belief that the essential value of sensor technology lies in making our lives more convenient through seamless, natural interactions between people and sensing devices, our aim is to leave you free to focus on what really matters in life.

Choose your type of sense

Thanks to industry-leading technologies Infineon XENSIV™ sensors are exceptionally precise. They are the perfect fit for various customer applications in automotive, industrial and consumer markets.

Pressure sensors

Our digital barometric pressure sensors give designers the best choice when it comes small form factors, highest precision and accuracy over a wide temperature range, fast read-out speeds and low power consumption.

Radar sensors

Radar supports existing applications while providing features that enable completely new use cases. It measures velocity, range and angle, both horizontal and vertical, for precise position mapping and 3D tracking.

MEMS microphones

MEMS microphones overcome existing audio chain limitations and are designed for applications where low self-noise (high SNR), wide dynamic range, low distortions and a high acoustic overload point are required.

PAS CO2 sensor

Leveraging photoacoustic spectroscopy (PAS), Infineon has developed an exceptionally small CO_2 sensor that overcomes existing size, cost and performance challenges.

Today, sensors already enable interactions between people and devices

This interaction often depends on the interpretation and merging of information from different sources. Machines cannot yet read our minds and do not always have the information necessary to correctly evaluate a given situation. So, we sometimes have to explicitly tell devices what we want them to do. This can be inconvenient and time-consuming. Inspired by human nature, Infineon intuitive sensing solutions are designed to take the complexity out of our interaction with devices.

Reflecting a holistic approach, we combine different sensors with state-of-the-art software to create a comprehensive picture of the world around us. By fusing several smart sensors into one coherent intelligent system, our intuitive sensing solutions simplify complex technical processes and enable people to effortlessly interact with devices. These smart devices intuitively sense the world around them, determining what is expected and needed from them.

366

XENSIV™ MEMS microphones for consumer

Low self-noise (SNR), wide dynamic range, low distortions, high acoustic overload point

The popularity of voice user interfaces and the usage of audio recording to share information and experiences are increasing dramatically. However, the performance of microphones often limits the potential of today's cutting-edge devices. Not anymore!

Infineon XENSIV™ MEMS microphones introduce a new performance class for MEMS microphones that overcomes existing audio chain limitations. IM69D130 is designed for applications where low self-noise (high SNR), wide dynamic range, low distortions, and a high acoustic overload point are required. Infineon's latest analog XENSIV™ MEMS microphone IM73A135 pushes the level of audio performance even further (Highlights).

Features

- 69 dB(A) signal-to-noise ratio (SNR)
- Below 1 percent distortions at 128 dBSPL (130 dBSPL AOP)
- Digital (PDM) interface with 6 µs group delay at 1 kHz
- Tight sensitivity (-36 ±1 dB) and phase (± 2 deg) tolerances
- 28 Hz low frequency roll-off
- 4.0 x 3.0 x 1.2 mm³ package

Benefits

- High fidelity and far-field audio recording
- Matched, noise and distortion-free audio signals for advanced audio processing
- Ultralow group delay for latency-critical applications
- No analog components required

Typical applications

- High-quality audio capturing: e.g. cameras, camcorders, conference systems
- Voice user interface: e.g. smart speaker, home automation, and IoT devices
- Active noise cancellation: headphones and earphones
- Audio pattern detection: predictive maintenance, security or safety applications

Product portfolio

Product	OPN	Package	Current consumption	Sensitivity	Signal to noise	Supply voltage
IM69D130	IM69D130V01XTSA1	LLGA-5-1	980 µA	-36 dBFS	69 dB	1.62-3.6 V
IM69D120	IM69D120V01XTSA1	LLGA-5-1	980 µA	-26 dBFS	69 dB	1.62-3.6 V
NEW IM73A135	IM73A135V01XTSA1	PG-LLGA-5-2	170 µA @ 2.75 V, 70 µA @ 1.6 V	-38 dBV	73 dB	1.52-3.0 V

Our new XENSIV™ IM73A135 sets a new performance benchmark in MEMS microphones

Infineon's latest XENSIV™ MEMS microphone IM73A135 sets a new performance benchmark in MEMS microphones. Best-in-class signal to noise ratio (SNR) of 73 dB and a high acoustic overload point of 135 dB SPL enables crystal clear audio pick up. This high dynamic range microphone with a small footprint of 4 x 3 x 1.2 mm³ is based on Infineon's new Sealed Dual Membrane MEMS technology, which allows for better handling during assembly. The IM73A135 allows designers to reach a level of high audio performance that was previously only achievable by ECMs while at the same time reaping the benefits inherent in MEMS technology.

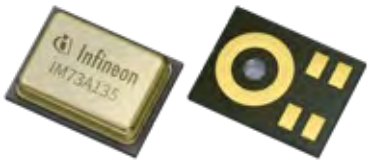

367

Infineon's Sealed Dual Membrane (SDM) MEMS technology

Infineon's SDM MEMS technology is based on a miniaturized symmetrical microphone design. High-end studio microphones are based on a similar working principle to achieve a highly linear output signal. The MEMS structure is hermetically sealed and comprises two moving membranes and a capacitive plate. Sealing the capacitance area enables practically noise-free audio signal capturing, allowing for an increase in SNR from 70 dB up to 75 dB.

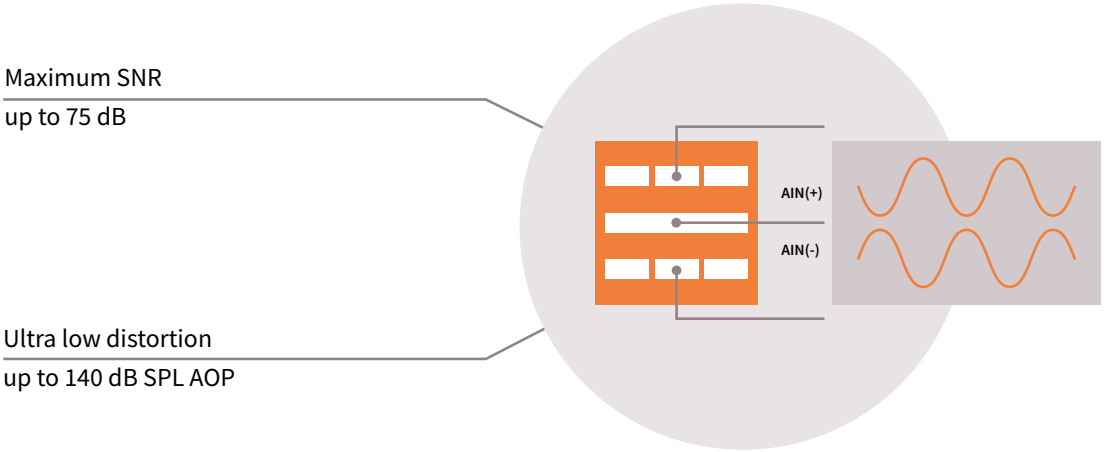

Infineon inside MEMS microphone partners

Building upon the superior XENSIV™ MEMS microphone performance, Infineon's extensive network of global partners offers customers a comprehensive portfolio of XENSIV™ MEMS microphone-based reference designs, as well as Infineon inside MEMS microphones that will propel audio performance to the next level even for the most demanding applications. Click on the buttons below to learn more and purchase our partner solutions.

368

XENSIV™ digital barometric pressure sensor

for mobile and wearable devices

Infineon's digital barometric pressure sensor family is the best choice for mobile and wearable devices due to its small form factor, high precision, and low power consumption. Pressure sensing is based on capacitive technology, which guarantees ultra-high precision (±2 cm) and excellent relative accuracy (±0.06 hPa) over a wide temperature range. The sensor's internal signal processor converts the output from the pressure and temperature sensor elements to 24-bit results. Each pressure sensor has been calibrated individually and contains calibration coefficients. The coefficients are used in the application to convert the measurement results to true pressure and temperature values. All sensors have a FIFO that can store the latest 32 measurements. Since the host processor can remain in a sleep mode for a longer period between readouts, a FIFO can reduce the system power consumption. Sensor measurements and calibration coefficients are available via the serial I2C/SPI interface.

DPS310

A barometric pressure sensor with very low power consumption is recommended for applications where power consumption is critical and the highest precision in pressure metering is required.

DPS368

DPS368 offers the best-in-class resolution (±2 cm), a very fast read-out speed, and low current consumption. The sensor can be used in a harsh environment, as it is robust against water (IPx8 - 50 m underwater for 1 hour), dust and humidity. The small package size saves up to 80 percent of the space and makes the DPS368 ideal for mobile applications and wearable devices.

Typical applications

- Drones: altitude detection and height stability
- Health and fitness: accurate elevation gain and step counting (e.g. for smartwatches)
- Outdoor Navigation: GPS start-up time/accuracy improvement; dead reckoning (e.g. in tunnels)
- Indoor navigation: floor detection e.g. in shopping malls and parking garages
- Smart home: micro weather forecasting; room temperature control; intruder detection
- Airflow control: Smart filter replacement alarm (e.g. in home appliances); predictive maintenance
- Health care: fall detection; respiratory devices; smart inhalers

Key product features	DPS310	DPS368
	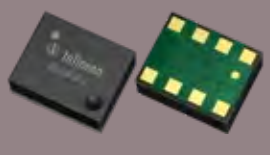	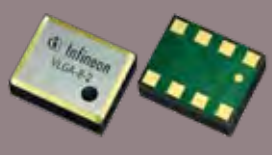
Package size	2.0 x 2.5 x 1.0 mm	2.0 x 2.5 x 1.1 mm
Operating pressure range	300 … 1200 hPa	
Operating temperature range	-40 … 85°C	
Pressure level precision	± 0.002 hPa (or ±0.02 m)	
Relative accuracy	± 0.06 hPa (or ±0.5 m)	
Absolute accuracy	± 1 hPa (or ±8 m)	
Temperature accuracy	0.5°C	
Pressure temperature sensitivity	0.5 Pa/K	
Measurement time	3.6 ms (low precision); 27.6 ms (standard mode)	
Average current consumption @ 1 Hz sampling rate	1.7 µA pressure measurement, 1.5 µA temp. measurement, standby 0.5 µA	
Supply voltage	V_{DDIO}: 1.2 – 3.6 V; V_{DD}: 1.7 – 3.6 V	
Operating modes	Command (manual), background (automatic), standby	
Interface	I2C and SPI, both with optional interrupt	

/pressure-sensors-iot

For more details on the product, click on the part number or contact our product support.

369

Functional block diagram

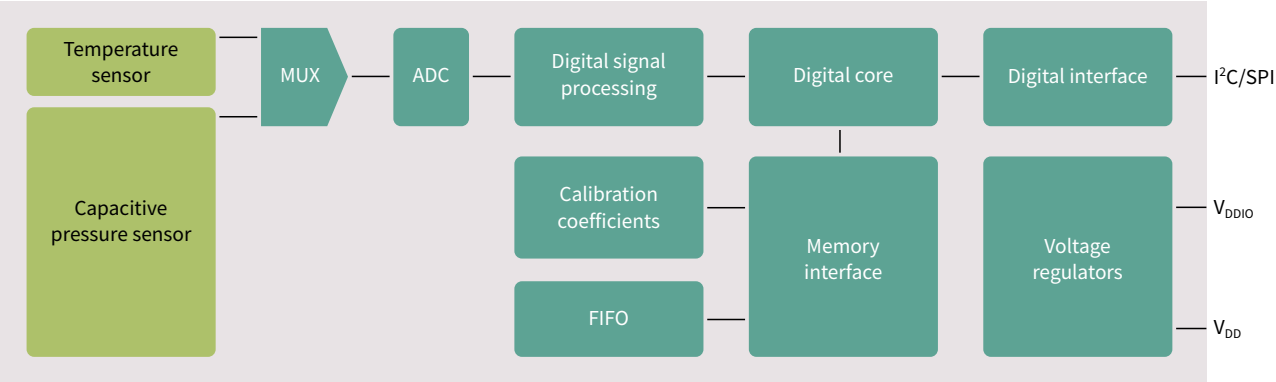

Application circuit example (in I²C configuration)

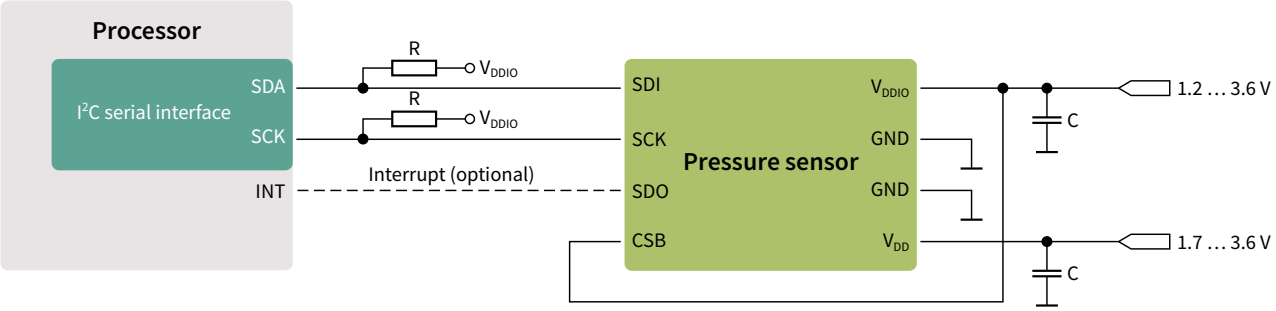

Pin configuration (top view)

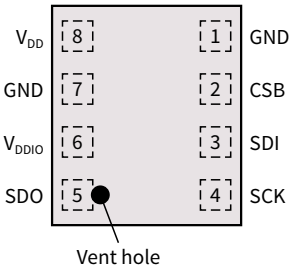

Pin	Name	Function
1	GND	Ground
2	CSB	Chip select
3	SDI	Serial data in/out
4	SCK	Serial clock
5	SDO	Serial data out
6	V_{DDIO}	Digital interface supply
7	GND	Ground
8	V_{DD}	Analog supply

Infineon inside pressure sensor partners

Building upon its best-in-class technology, Infineon offers a full range of barometric pressure sensors as chipsets. Infineon's network of global partners offers customers a comprehensive portfolio of Infineon inside pressure sensors that will propel performance to the next level even for the most demanding applications.

370

XENSIV™ PAS CO2

High performance in a small size – Introducing a disruptive CO_2 sensor based on photoacoustic spectroscopy (PAS)

Infineon's XENSIV™ PAS CO2 breaks the boundaries of CO_2 sensing with its exceptionally small form factor and high accuracy.

Measure what matters with our XENSIV™ PAS CO2 sensor

CO_2 measurement contributes to improvements in health, comfort and productivity as well as energy efficiency. Even at moderate levels, CO_2 can have a negative impact on health and productivity, causing drowsiness and headaches. Fortunately, smart indoor air quality sensors can "smell" rising levels of CO_2 and either alert the user or trigger a system response. Awareness of indoor air quality is further increasing as a result of the COVID-19 pandemic, making accurate, affordable monitoring solutions like XENSIV™ PAS CO2 more important than ever. Given the correlation between CO_2 and aerosol concentration, CO_2 sensors can contribute to mitigating the transmission of not only COVID-19 but also other airborne illnesses such as the common cold and influenza. Furthermore, CO_2 sensors can facilitate demand-controlled ventilation, leading to improvements in energy efficiency and significant savings on energy bills.

Accurate, real-time CO_2 measurement thanks to superior MEMS technology

Widespread adoption of CO_2 sensors has so far been hampered by size, performance and cost constraints. Infineon's XENSIV™ PAS CO2 sensor leverages photoacoustic spectroscopy (PAS) technology to provide an exceptionally small, real CO_2 sensor that is both highly accurate and cost-effective. Infineon's leading position in MEMS technology is the foundation for this unique and accurate CO_2 detection approach. Reliable CO_2 measurement enables smart monitoring of indoor air quality, facilitating improvements in health, productivity and overall well-being. These features make the XENSIV™ PAS CO2 sensor ideal for applications in building automation as well as for integration into consumer IoT devices such as air purifiers, thermostats, baby monitoring devices, wake-up alarms and smart speakers.

Disruptive environmental sensor technology from Infineon

XENSIV™ PAS CO2 integrates on the PCB a photoacoustic transducer, including an acoustic detector, infrared source and optical filter; a microcontroller for signal processing and a MOSFET chip to drive the infrared source. The exceptional sensitivity of the acoustic detector coupled with the integrated PCB design reduce space requirements by more than 75 percent compared NDIR CO_2 sensors.

371

The PAS (photoacoustic spectroscopy) principle

The sensor is characterized by a disruptive measurement principle called PAS (photoacoustic spectroscopy). It works as follows: pulses of infrared light pass through an optical filter tuned to the CO_2 absorption wavelength. The CO_2 molecules absorb the filtered light, causing them to shake and generate a pressure wave with each pulse. This is called the photoacoustic effect. The sound is then detected by an acoustic detector optimized for low frequency operation and converted to a CO_2 concentration reading by the microcontroller.

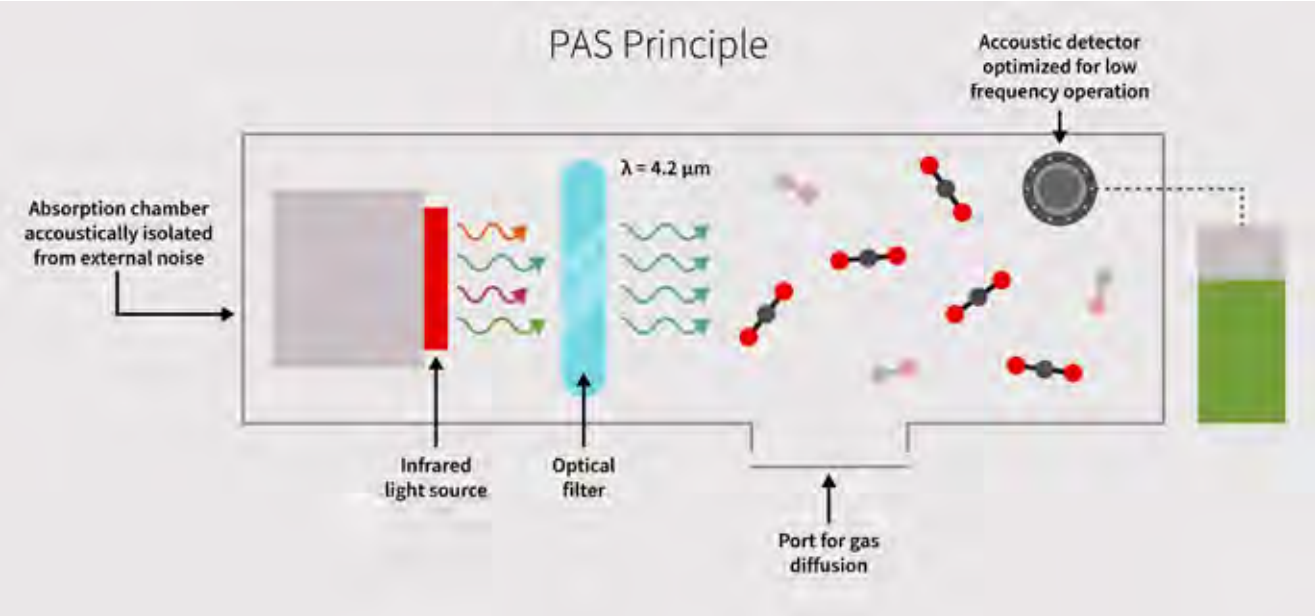

Features and benefits

Key features	Key benefits
› Exceptionally small form factor (14 x 13.8 x 7.5 mm³)	› Space savings in customers' end products
› High accuracy (±30 ppm ±3% of reading)	› High-quality data and compliance with smart building standards
› SMD package delivered in tape and reel	› Cost-effective high-volume assembly and easy system integration
› Advanced compensation and self-calibration algorithms	› Plug & play for fast design-to-market
› Various configuration options (e.g. sampling rate, baseline calibration) and interfaces (UART, I2C, PWM)	› Customer flexibility

Applications

- HVAC (Heating, Ventilation and Air Conditioning) systems
- Smart home appliances such as air purifiers, air conditioners and thermostats
- Consumer devices for air quality monitoring such as personal assistants and CO_2 traffic lights
- Smart indoor lighting

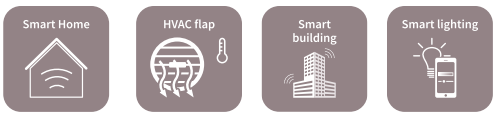

372

XENSIV™ radar sensors for consumer and IoT applications

As market leader in radar chips, we offer a wide portfolio of mmWave radar sensors as part of our XENSIV™ sensor family – including Doppler radar as well as FMCW radar systems. This portfolio includes the smallest 24 GHz MMIC in the market as well as the most integrated and largest 24 GHz radar transceiver family currently available. Those radar chips are designed to support different industrial, smart home, and consumer applications. In addition, we also offer radar sensors in the 60 GHz range, which are used in consumer products such as the Google Pixel 4 smartphone.

Motion detection with radar offers significant advantages over PIR and other motion-sensing technologies

With our 24 and 60 GHz radar sensors, we cover a wide range of applications. Many of them are based on motion detection triggering systems like lighting solutions, automatic doors, camera and security systems, or smart home devices. In contrast to other motion detection technologies like PIR, radar technology offers significant advantages. These include smaller system sizes, greater accuracy, and more precise measurements of detected objects. In addition, radar can also determine the direction of a moving object, speed of an object, distance, and depending on the antenna configuration, even the position of a moving object.

Applications for Infineon's radar sensors

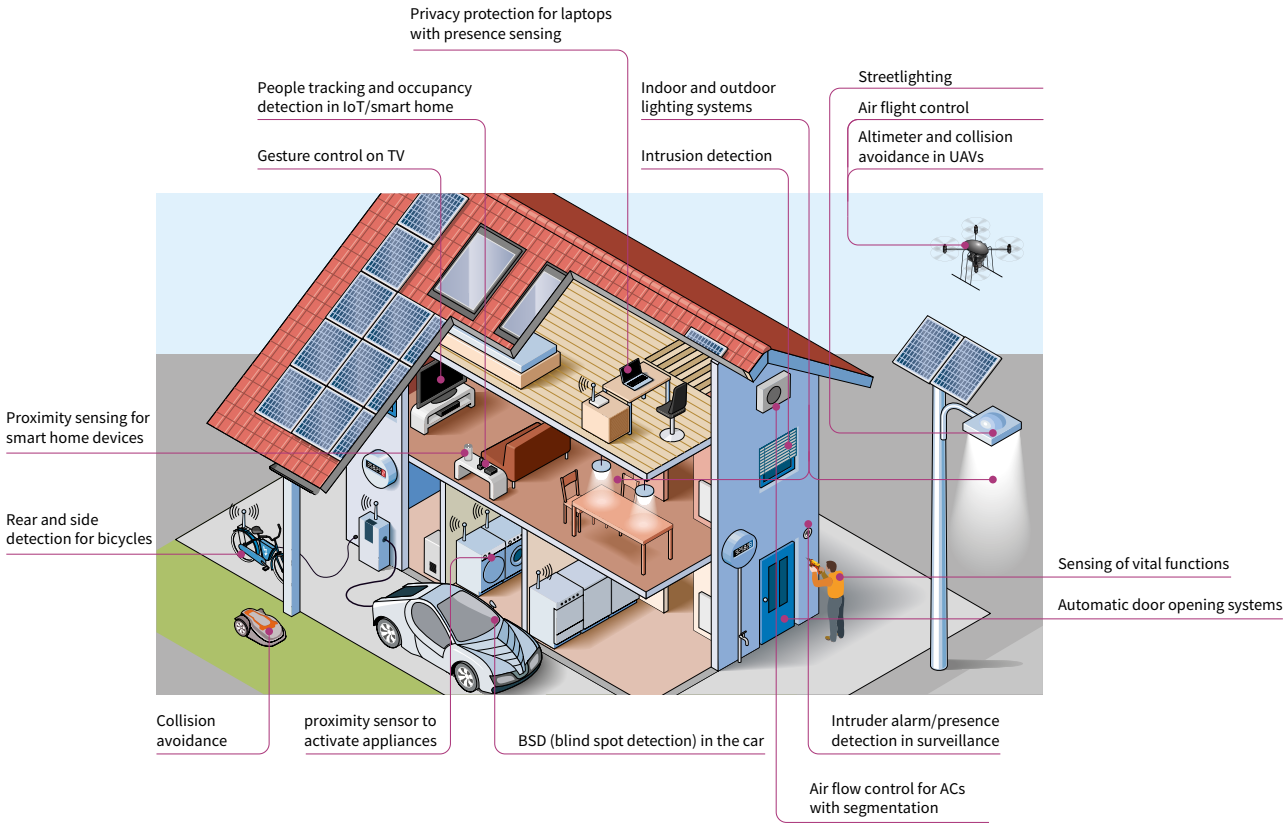

373

Key benefits of radar sensing

- Direction, proximity, and speed detection
- Segmentation and tracking functionalities
- Target positioning
- Detection through non-conductive materials
  - Product design flexibility
  - Anonymous sensing
- Maintains operation through harsh environmental conditions such as rain, snow, fog, dust, etc.
- Sensitive enough to capture breathing and heartbeat
  - Radar can feel presence & vital functions
- Radar performance parameters can be adjusted
  - Adaptable to different application requirements

Applications

New application or simple PIR replacement? Radar has it covered.

Radar, used in motion detection applications, increases accuracy when compared to passive infrared (PIR) technology, allowing more precise measurement of object detection, and providing new capabilities such as the detection of speed and the direction of moving objects. Radar is also superior to camera-based systems by allowing detection of the objects while keeping identities anonymous.

374

Example applications that can benefit from radar technology

Smart Home	Door opening	Security	Lighting	Monitors and laptops
Robust, discreet, small	Direction of travel to remove false opening	Privacy protection, and increased accuracy	Indoor and outdoor Resistant to harsh weather	Small, hidden, sensitive

Home appliances	Air conditioners	Smart speaker	TV	Gaming and VR
		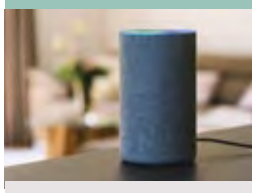	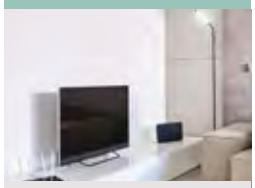	
Activate displays based on presence around	Track people to move the airflow away from them	Eliminate keyword based activation	Safe energy & OLED lifetime by turning off	Enhance gaming experience

Gesture control	Material detection	Service robots	Robotics	Vital sensing
Additional gesture package available	Object recognition and classification	Robust, small footprint, accurate	Safety, accuracy and efficiency	Breathing & heart rate measurement

When to use 24 GHz or 60 GHz radar technology

In the 24 GHz range, the bandwidth for FMCW radar operations covers 250 MHz within the regulated ISM band. In the 60 GHz regime, an unlicensed ultra-wideband of up to 7 GHz can be used for short-range applications. Consequently, 60 GHz FMCW radar systems can offer a better resolution and therefore allow additional use cases such as human tracking and segmentation. Even gesture control, material classification, or the monitoring of various vital functions (respiration, heartbeat, or even blood pressure) is possible with radar technology due to micromotion detection.

XENSIV™ radar sensors for industrial and consumer applications

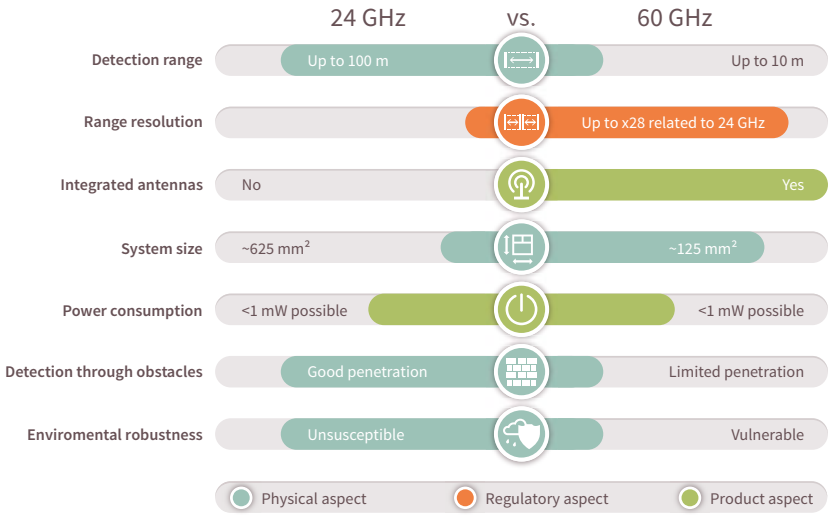

375

XENSIV™ 24 GHz radar sensor ICs

Infineon BGT24M/L family of MMIC chips

Infineon's range of 24 GHz industrial radar chips provides five configurations of transmit and receiver channels, ensuring that there is a chip to support your specific application. From basic applications such as motion detection in security systems, which only requires one transmit and one receive channel, to more complex applications like 3D positioning, which requires two or more receive channels, our range of radar chips supports all of your requirements.

Features	Infineon MMIC	Benefits
› 24 GHz ISM band operation for motion, speed, direction movement and distance measurements › Five 24 GHz chips available › Highly integrated MMICs	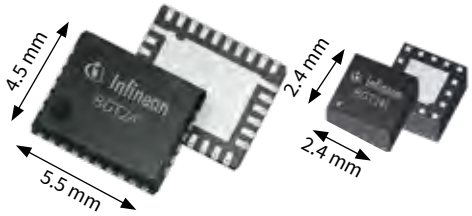	› Long-range distance detection of moving objects up to 50 m › Wide range speed detection up to ±100 km/h › Low BOM costs

Product	Configuration	Features
BGT24MTR11	1Tx + 1Rx	› Measures, not just motion, but also speed, direction, and distance › Small form factor › Resistance to moisture, dirt, and temperature › Increased area coverage › Discrete design › Low power MMICs for energy saving › Privacy protection › Adaptable to different application requirements › Highly integrated chips eliminating costly external components
BGT24MR2	2Rx	
BGT24MTR12	1Tx + 2Rx	
BGT24LTR11	1Tx + 1Rx	
BGT24LTR22	2Tx + 2Rx	

The BGT24LTR22 key features

- 24 GHz transceiver MMIC
- Fully integrated low phase noise VCO
- Integrated analog base band stage with programmable gain and filter settings
- Bi-directional pin for synchronization
- Built in temperature compensation circuit for VCO stabilization, no PLL needed
- Low power consumption
- Fully ESD protected device
- Single ended RF and IF terminals
- Single supply voltage 1.5 V

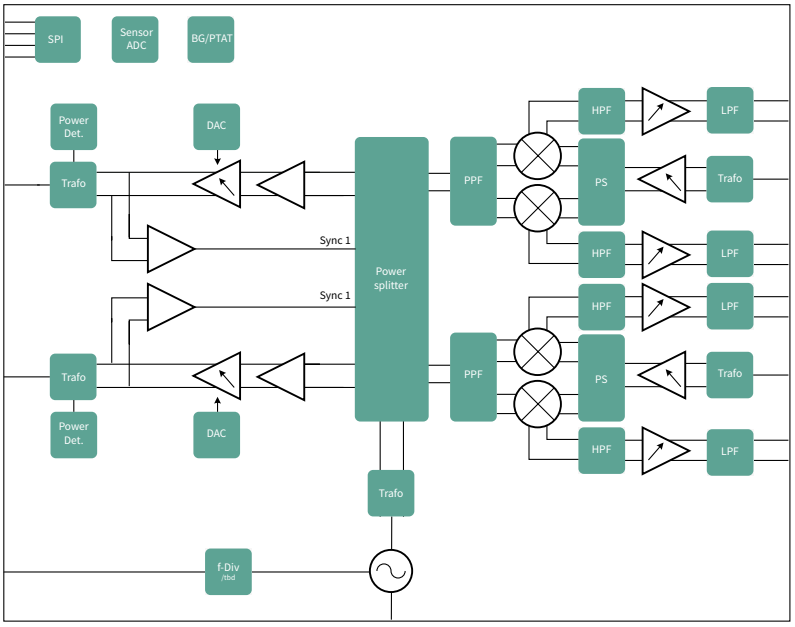

376

XENSIV™ 60 GHz radar sensor IC

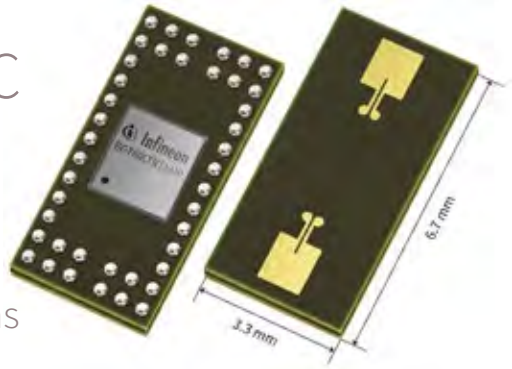

Infineon's innovative XENSIV™ 60 GHz radar chip enables things to see and revolutionizes the human-machine interface.

BGT60LTR11AIP for consumer and IoT applications

The BGT60LTR11AIP is a fully integrated microwave motion sensor including Antennas in Package (AIP) as well as built-in detectors for motion and direction of motion. A state machine enables. In this autonomous mode, it detects a human target up to 5 m with a low power consumption of less than 5 mW. The BGT60LTR11AIP enables radar technology for everyone, since it does not require know-how in RF, antenna design, or radar signal processing. These features make the small-sized radar solution a compelling smart and cost-effective replacement for conventional PIR sensors in low power or battery-powered applications. Also, with its small form factor, Infineon's highly integrated radar sensor solutions bring innovative, intuitive sensing capabilities to many applications. Radar has been demonstrated to be a powerful sensor for short-range motion detection.

Block diagram of the BGT60LTR11AIP

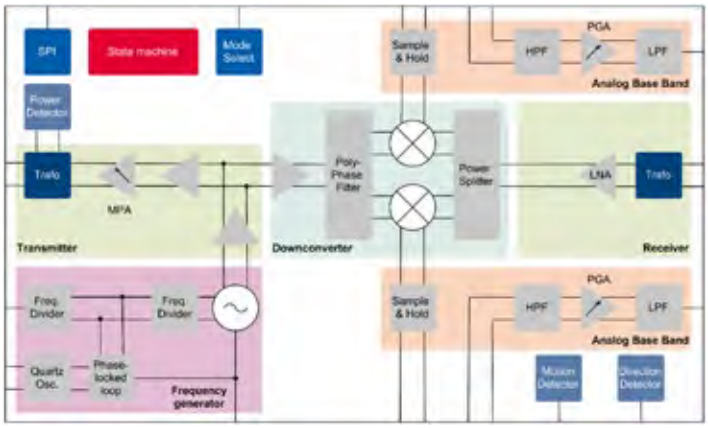

Target application

- Smart Building and Smart Home
- Home appliances
- Smart home security
- Room air conditioners
- Automated door openers
- Smart entrance counter solution

Key features

- 3.3 x 6.7 x 0.56 mm package size
- 1Tx 1Rx Antennas in Package (AIP) with 80 ° field of view
- Built-in motion detector
- Built-in direction of motion detector
- Multiple modes of operation incl. a completely autonomous mode
- Adjustable performance parameters: detection sensitivity, hold time and frequency of operation
- FR4 material for PCB design is sufficient

Key benefits

- Autonomous mode:
  - Up to 5 m detection range
  - Less than 5 mW power consumption
  - Requires minimal external circuitry incl. crystal, LDO and some resistors capacitors

Adding a M0 MCU extends flexibility

- Up to 10 m detection range (SPI mode)
- Less than 2 mW power consumption possible

Product portfolio

Product	Package	SP Number
BGT60LTR11AIP DEMO BGT60LTR11AIP	UF2BGA-42-1	SP005537624 [Demo Kit: SP005422969]

377

24 GHz evaluation and demonstration boards

In addition to the BGT24M/L family of MMIC chips, Infineon provides a continuously expanding range of evaluation and demonstration boards to support the testing and development of radar in multiple applications of our customers. All boards are provided with base-level software to support the ease of use and faster time-to-market integration.

Features

- Four system boards available
- All include 24 GHz radar chip and XMC™ microcontroller
- Kit contains user manual, GUI, MATLAB compiler and Gerber files
- Software available via Infineon Toolbox

Infineon development kit

Demonstrator with SW support

Benefits

- Capability to detect motion, speed and direction of movement (approaching or retreating)
- distance and angle of arrival based on hardware
- Fast prototyping with available software

Sense2GoL Pulse (BGT24LTR11 + XMC4700)	Distance2Go (BGT24MTR11 + XMC4200)	Distance2GoL (BGT24LTR11 + XMC4700)	Position2Go (BGT24MTR12 + XMC4700)
› Capability to detect motion, speed, and direction of movement (approaching or retreating) › Detection range of 18 m for a human target at a power consumption < 5 mW › High sensitivity of detection in comparison to PIR › Arduino compatible microcontroller board (Arduino standard connectors) › Modulation parameters can be changed to suit the application requirements › Multiple current sensors for current consumption monitoring and optimization › Integrated multiple-element patch antennas	› Capability to detect the distance of multiple targets › Capability to detect motion, speed, and direction of movement (approaching or retreating) › Operates in harsh environments and detects through non-metallic materials › BGT24MTR11 – 24 GHz highly integrated RF MMIC › XMC4200 Arm® Cortex®-M4 –32-bit industrial microcontroller › Debug over Cortex 10 pin debug connector › Integrated multiple-element patch antennas	› Capability to detect the distance of the closest human target › Capability to detect motion, speed, and direction of movement (approaching or retreating) › Very low power consumption due to duty cycling options › Operates in harsh environments and detects through non-metallic materials › BGT24LTR11 – 24 GHz highly integrated RF MMIC › XMC4700 Arm® Cortex®-M4 –32-bit industrial microcontroller › Debug over Cortex 10 pin debug connector › Microstrip patch antennas with › 10 dBi gain and 29°/80° field of view	› Capability to detect and track the position of multiple targets › Capability to detect the distance of multiple targets › Capability to detect motion, speed, and direction of movement (approaching or retreating) › Operates in harsh environments and detects through non-metallic materials › BGT24MTR12 – 24 GHz highly integrated RF MMIC › XMC4700 Arm® Cortex®-M4 –32-bit industrial microcontroller › Debug over Cortex 10 pin debug connector › Integrated multiple-element patch antennas
Main applications › Security › Indoor and outdoor lighting › Smart home › Automatic door opener › Intelligent switches › Speed measurement	**Main applications** › Drone: soft landing/obstacle avoidance › Smart toilets › Tank level sensing › Intelligent switches	**Main applications** › Smart Home devices › Indoor and outdoor lighting systems › Unmanned aerial vehicles (UAV) › Security systems from commercial surveillance to low-power IP cameras › HVAC products like smart air conditioners › Smart sanitary facilities (eg Smart Toilets)	**Main applications** › Drone/robots: obstacle avoidance › Security systems incl. surveillance cameras › People tracking (IoT, smart home) › Vital sensing
Board dimensions › Board 55 mm x 85 mm › Shield: 55 mm x 66 mm	**Board dimensions** › Board 36 mm x 45 mm	**Board dimensions** › Board 55 mm x 85 mm › Shield: 55 mm x 66 mm	**Board dimensions** › Board 50 mm x 45 mm
Kit contents › RF radar shield: SHIELD_BGT24LTR11 › Programmed controller board: RADAR BB XMC4700 › Micro USB cable › SW GUI to operate kit › Doppler FW and SW[1)] › Schematic and bill-of-materials of module	**Kit contents** › User's manual › Demonstration board › SW GUI to operate kit › FMCW FW and SW[1)] › Doppler FW and SW[1)] › Schematic and bill-of-materials of module	**Kit contents** › RF radar shield: SHIELD_BGT24LTR11 › Programmed controller board: RADAR BB XMC4700 › Micro USB cable › SW GUI to operate kit › Doppler FW and SW[1)]	**Kit contents** › User's manual › Demonstration board › Corner reflector › SW GUI to operate kit › FMCW FW and SW › Doppler FW and SW › Schematic and bill-of-materials of module

1) Usage of the FMCW and/or Doppler FW and SW requires agreeing to Infineon's user's agreement and licensing terms.

For more details on the product, click on the part number or contact our product support.

378

24 GHz modules

Partnering with the leading radar solution providers enables Infineon to connect our customers looking for turnkey solutions and design support for a complete range of applications. Utilizing our strong network of partners, the radar portfolio is extended to include a range of easy-to-integrate modules. Each of them contains Infineon's 24 GHz MMIC.

Features	Partner modules using Infineon chips	Benefits
› Complete module, including radar MMIC, antenna options, MCU signal processing options, and SW options (Doppler, FSK and FMCW versions available)	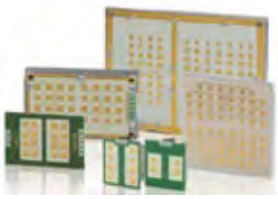 Module (RF module; RF module + MCU including SW)	› Ease of design › Turnkey solution, no need for test and certification

By integrating Infineon's 24GHz MMIC chip into the partners easy-to-use and simple-to-integrate modules the complexity and time to market for a range of applications such as smart home automation, camera & security systems, air conditioners, UAVs, robotics, and smart lighting, are reduced.

Learn radar with Infineon on www.infineon.com/MakeRadar

For the first time, we bring radar to makers and developers. Here you can test, develop, and learn radar and its applications. At infineon.com/makeradar, you will see how simple it has become to work with ultrasmall radar sensors. The board and data will flow to your browser for testing, and this is not all, if you want to take the next step just take the available Arduino code examples and start your project.

Partners

Visit the link below to view our network of partners who provide modules and design support for all 24GHz industrial applications:
www.infineon.com/24GHzPartners

For more details on the product, click on the part number or contact our product support.

379

Shield2Go

Infineon's Shield2Go boards offer a unique customer and evaluation experience – the boards are equipped with one Infineon IC and come with a ready-to-use Arduino library. Customers can now develop their own system solutions by combining 2GO boards together with Infineon MyIoT adapters. MyIoT adapters are gateways to external hardware solutions like Arduino and Raspberry PI, which are popular IoT hardware platforms. All this enables the fastest evaluation and development of the IoT system.

Security

OPTIGA™ Trust E Security Shield2Go
Product name: S2GO_Security_OPTIGA_E
SP: SP001820138

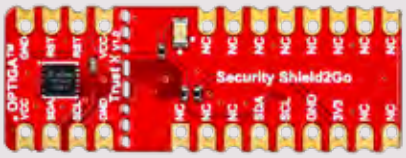

OPTIGA™ Trust X Security Shield2Go
Product name: S2GO SECURITY OPTIGA X
SP: SP002349576

Sensors

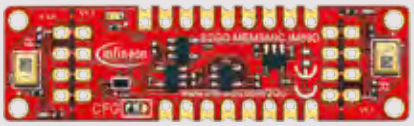

IM69D130 Microphone Shield2Go
Product name: S2GO MEMSMIC IM69D
SP: SP002851544

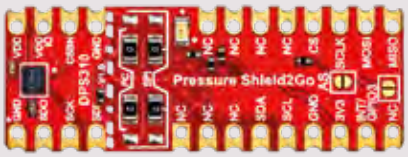

S2GO Pressure Sensor DPS310
Product name: S2GO_PRESSURE_DPS310
SP: SP001777630

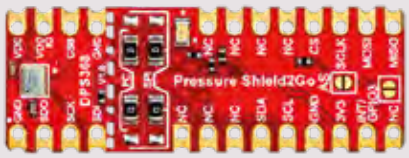

S2GO Pressure Sensor DPS368
Product name: S2GO PRESSURE DPS368
Featured product: XENSIV™ pressure sensor DPS368
OPN: S2GOPRESSUREDPS368TOBO1

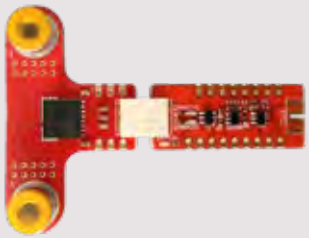

TLI4971 Current Sense Shield2Go
Product name: S2GO_CUR-SENSE_TLI4971
SP: SP005345472

For more details on the product, click on the part number or contact our product support.

380

Shield2Go

Sensors

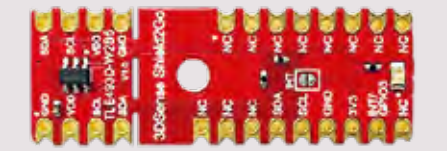

TLE493DW2B6 3DSense Shield2Go
Product name: S2GO_3D_TLE493DW2B6-A0
SP: SP004308594

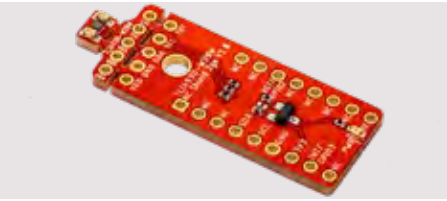

TLI493D 3DSense Shield2Go in small WLB-5 package (1.13 mm x 0.93 mm x 0.59 mm
Product name: S2GO_3D_TLI493DW2BW-A0
SP: SP001823678

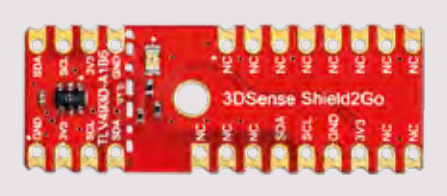

TLV493D 3DSense Shield2Go
Product name: S2GO_3D-SENSE_TLV493D
SP: SP005410385

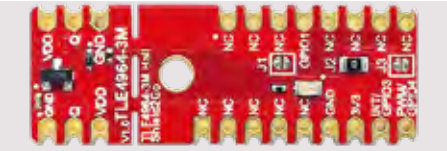

TLE4964-3M Hall Sense Shield2Go
Product name: S2GO_HALL_TLE4964-3M
SP: SP004308590

TLE4966K Double Hall Shield2Go
Product name: S2GO_2_HALL_TLE4966K
SP: SP004308598

Microcontroller

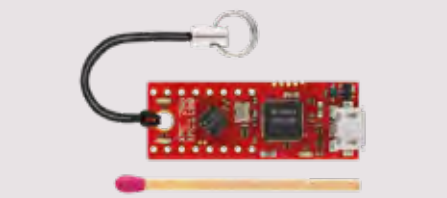

XMC 2Go Kit
Product name: KIT_XMC_2GO_XMC1100_V1
SP: SP001199544

MyIoT – Adapter

MyIoT Adapter
Sales name: MYIOTADAPTERTOBO1
SP: SP002434972

Infineon's 2Go boards offer a unique customer and evaluation experience – the boards are equipped with one Infineon IC and come with a ready-to-use Arduino library. Customers can now develop their own system solutions by combining 2Go boards together with Infineon MyIoT adapters.
MyIoT adapters are gateways to external hardware solutions like Arduino and Raspberry PI, which are popular IoT hardware platforms. All this enables the fastest evaluation and development of IoT system.

For more details on the product, click on the part number or contact our product support.

381

Sensor 2GO kits

Infineon's XENSIV™ Sensor 2GO kits are budget-priced evaluation boards that are already equipped with a sensor combined with an Arm® Cortex®-M0 CPU.
The Sensor 2GO kits provide a complete set of on-board devices, including an on-board debugger. Build your own application and gadget with the Sensor 2GO kits.
Our 2GO kits are ready-to-use plug-and-play boards.

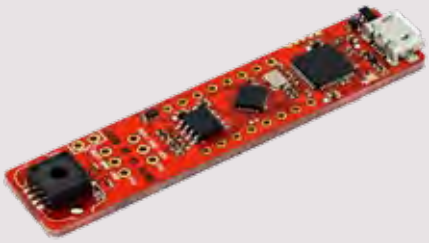

Automotive Pressure Sensor 2GO kit

Product name: KP215F1701-PS2GO-KIT/KP229E3518-PS2GO-KIT/KP236-PS2GO-KIT/KP254-PS2GO-KIT/KP275-PS2GO-KIT

SP: SP002676652/SP002676656/ SP002676664/SP002676664/ SP002676648

Features

- We offer three different derivatives
  - KP215F1701 MAP: Analog Manifold Air Pressure Sensor
  - KP229E3518 TurboMAP: Analog Turbo Manifold Air Pressure Sensor
  - KP236 BAP: Analog Barometric Air Pressure
  - KP254 dBAP: Digital Barometric Air Pressure (SPI)
  - KP275 dMAP: Digital Manifold Air Pressure Sensor (SENT)
- Pressure and external temperature measurement - ONLY KP275dMAP
- CSV file can be generated for each derivative
- External NTC included KP275-PS2GO-KIT
- Configuration of different transfer functions possible, KP215F1701-PS2GO-KIT and KP229E3518-PS2GO-KIT
- A pressure connector consisting of a fast connector for 6mm tubes, pressure couple, and sealing is included
- GUI software for free download
- Power over USB (micro USB), ESD and reverse current protection
- GUI for free download

3D Magnetic Sensor 2GO kit

Product name: TLE493D-A2B6 MS2GO/TLE493D-W2B6 MS2GO/ TLV493D-A1B6 MS2GO

SP: SP001707582/SP001707578/ SP001707574

Features

- We offer three different derivatives
  - TLE493D-A2B6 (three dimensional magnetic sensor)
  - TLE493D-W2B6 (three dimensional magnetic sensor)
  - TLV493D-A1B6 (three dimensional magnetic sensor)
- XMC1100 (Arm® Cortex™-M0 based)
- On-board J-Link Lite Debugger (Realized with XMC4200 Microcontroller)
- Power over USB (Micro USB), ESD and reverse current protection
- GUI for free download

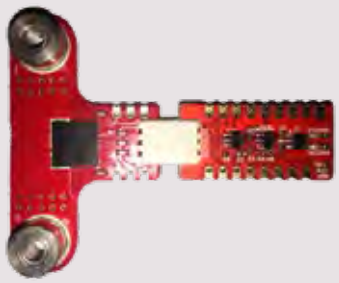

TLI4971 Current Sensor 2GO kit

Product name: TLI4971_MS2GO

SP: SP00534547

Features

- XENSIV™ magnetic current sensor TLI4971-A120T
- Sensor board for high current capability (≤20 A)
- Complete evaluation set including control and debug
- First measurements possible within minutes

For more details on the product, click on the part number or contact our product support.

382

Sensor 2GO kits

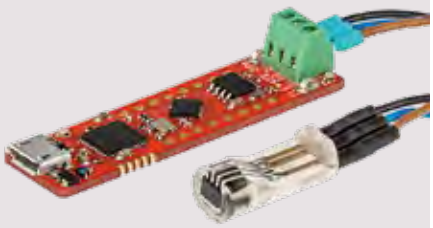

Speed Sensor 2GO kit

Product name: TLE4922 Speed-2-Go-Kit

SP: SP001624692

Features

- Budget-priced evaluation board for speed sensing
- Complete speed sensor incl. back-bias magnet, fixing and cable
- TLE4922 (active mono cell Hall sensor)
- XMC1100 (Arm® Cortex™-M0 based)
- On-board J-Link Lite Debugger (realized with XMC4200 microcontroller)
- Power over USB (Micro USB), ESD and reverse current protection
- GUI based tool for real in-application evaluation for free download

Angle Sensor 2GO kit

Product name: TLE5012B_E1000_MS2GO/TLI5012B_E1000_MS2GO/ TLE5012B_E5000_MS2GO/TLE5012B_E9000_MS2GO

SP: SP002133956/SP002133960/SP002133964/SP002133968

Features

- Budget-priced evaluation board for angle and position sensing
- We offer four derivatives:
  - TLE5012B E1000 version: automotive predefined variant with SSC and IIF communication protocols
  - TLE5012B E5000 version: automotive predefined variant with SSC and PWM communication protocols
  - TLE5012B E9000 version: automotive predefined variant with SSC and SPC communication protocols
  - TLI5012B E1000 version: industrial predefined variant with SSC and IIF communication protocols
- TLE5012B/TLI5012B GMR digital angle sensor
- XMC1100 (Arm® Cortex™-M0 based)
- On-board J-Link Lite Debugger (realized with XMC4200 microcontroller)
- The kit is compatible with the angle rotate knob for fast evaluation
- GUI based tool for real in-application evaluation for free download

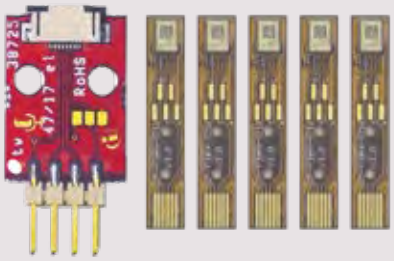

MEMS 2Go

Product name: EVAL_IM69D130_FLEXKIT

SP: SP002153022

The flex evaluation kit allows simple and easy evaluation of XENSIV™ MEMS microphone IM69D130. The flex board can be easily connected to audio testing setup. The evaluation kit includes five IM69D130 mounted on flex board and one adapter board.

Features

- Quick and easy evaluation of XENSIV™ MEMS microphones
- Flex dimensions: 25 x 4.5 mm
- Adapter dimensions: 20 x 15 mm

For more details on the product, click on the part number or contact our product support.

383

Add ons for Sensor 2GO kits and Shield2Go

Joystick for all 3D Magnetic Sensor 2GO kits and Shield2Go

Product name: JOYSTICK FOR 3D 2 GO KIT

SP: SP001491834

Features

- Easy mounting on all 3D magnetic sensor 2GO kits and Shield2Go
- First magnetic joystick measurements within minute

Rotate knob for all 3D Magnetic Sensor 2GO kits, angle sensor 2GO kits and 3D magnetic sensor Shield2Go

Product name: ROTATE KNOB 3D 2 GO KIT

SP: SP001504602

Features

- Easy mounting on all 3D magnetic and angle sensor 2GO kits as well as 3D magnetic sensor Shield2Go
- Rotate knob with magnet as used in control elements and push buttons
- Use cases 3D magnetic sensors: rotational and vertical movements of control elements and push buttons
- Use cases angle sensors: simulates rotational movements for angle measurements

Linear slider for all 3D Magnetic Sensor 2GO kits and Shield2Go

Product name: LINEAR-SLIDER 2GO

SP: SP002043034

Features

- Easy mounting on all 3D magnetic sensor 2GO kits and Shield2Go
- First magnetic linear evaluations within minutes
- Use case: linear movements
- Linear slider with magnet – flexible setup: adaptable air-gaps, two different magnetic strengths/materials and distance limiters

Out of shaft adapter for all 3D Magnetic Sensor 2GO kits and Shield2Go

Product name: OUT OF SHAFT FOR 3D 2 GO

SP: SP003475178

Features

- Easy mounting on all 3D magnetic sensor 2GO kits and Shield2Go
- Use case: angle measurement in out of shaft configuration with 3D Hall sensor
- Three different out of shaft configurations possible (x-z, y-z and x-y axis)
- Magnetic rotation bar with ring magnet included

For more details on the product, click on the part number or contact our product support.

384

Add ons for Sensor 2GO kits and Shield2Go

Linear control trigger for all 3D Magnetic Sensor 2GO Kits and Shield2Go

Product name: POWER_DRILL2GO

Features

- Easy mounting on all 3D magnetic sensor 2GO Kits and Shield2Go
- Use case: control trigger for e.g. power drill (linear position measurements with 3D Hall sensor)
- Magnetic slider with magnet included

Human Machine Interface (HMI) direction indicator for all 3D Magnetic Sensor 2GO Kits and Shield2Go

Product name: DIR_INDICATOR2GO

Features

- Easy mountig on all 3D magnetic sensor 2GO Kits and Shield2Go
- Use case: human-machine interface (3x3 position matrix) for e.g. automotive direction indicator
- Magnetic direction indicator with magnet included in handle bar

HMI mini control with 4 directions and 360° rotation for all 3D Magnetic Sensor 2GO Kits and Shield2Go

Product name: MINI_CONTROL2GO

Features

- Easy mounting on all 3D magnetic sensor 2GO Kits and Shield2Go
- Use case: left/rigth/forwad and backward including 360° rotation at all positions
- Control element includes magnet

OpenClose Adapter for Hall switch Shield2Go

Product name: OPENCLOSE2GOHSTOBO1

Features

- Open & Close detection with magnet for positions detection
- Presence and non-presence detection

For more details on the product, click on the part number or contact our product support.

385

Infineon support for sensors

Useful links and helpful information

Further information, datasheets and documents

infineon.com/sensors
infineon.com/microphones
infineon.com/magnetic-sensors
infineon.com/current-sensor
infineon.com/hall-switches
infineon.com/angle-sensors
infineon.com/3dmagnetic
infineon.com/pressuresensor
infineon.com/24GHz
infineon.com/pressure
infineon.com/CO2

2GO evaluation kits

infineon.com/sensors2go

Online simulation tools

infineon.com/cms/en/product/sensor/#!simulation

Info | Document | Evaluation Board | Tools | Play

Packages

- Surface mount device (SMD) technology
- Through-hole device (THD) technology

Packages

Surface mount device (SMD) technology

DPAK (TO-252-2)		DPAK (TO-252)		DPAK 5-pin (TO-252)		HDSOP-10-1		QDPAK TSC		D²PAK (TO-263)	
2	9.9 x 6.5 x 2.3	3	9.9 x 6.5 x 2.3	5	9.9 x 6.5 x 2.3	10	20.96 x 6.5 x 2.3	22	20.96 x 15.0 x 2.3	3	15.0 x 10.0 x 4.4
D²PAK (TO-263-2)		**TO263-7-11**		**TO263-7-12**		**TO263-7-13**		**D²PAK 7-pin (TO-263)**		**TO-Leadless (TOLL)**	
2	15.0 x 10.0 x 4.4	7	15.0 x 10.0 x 4.4	7	15.0 x 10.0 x 4.4	7	15.0 x 10.0 x 4.4	7	15.0 x 10.0 x 4.4	8	11.68 x 9.9 x 2.3
TOLT (top-side cooling)		**TOLG (Gullwing leads)**		**sTOLL**		**SC59**		**SOT-23**		**SOT-23-5**	
16	15.0 x 10.0 x 2.3	8	11.0 x 10.0 x 2.3	5	8.0 x 7.0 x 2.3	3	3.0 x 2.8 x 1.1	3	2.9 x 2.4 x 1.0	5	2.9 x 1.6 x 1.3
SOT-23-6		**SOT-89**		**SOT-223**		**SOT223-3-1**		**SOT-323**		**SOT-363**	
6	2.9 x 1.6 x 1.3	3	4.5 x 4.0 x 1.5	4	6.5 x 7.0 x 1.6	3	7.0 x 6.5 x 1.6	3	2.0 x 2.1 x 0.9	6	2.0 x 2.1 x 0.9
TSOP6		**PQFN 2x2**		**PQFN 2x2 dual**		**PQFN 3.3x3.3**		**SuperSO8**		**SuperSO8 dual**	
6	2.9 x 2.5 x 1.1	6	2.0 x 2.0 x 0.9	6	2.0 x 2.0 x 0.9	8	3.3 x 3.3 x 1.0	8	5.15 x 6.15 x 1.0	8	5.15 x 6.15 x 1.0
SuperSO8 fused leads		**SuperSO8 super cool**		**TDSON-8-47**		**TDSON-10-2**		**TDSON-10-7**		**TSDSON-8-25 fused leads**	
8	5.15 x 6.15 x 1.0	8	6.0 x 5.0 x 1.03	8	5.15 x 6.15 x 1.0	10	3.0 x 3.0 x 0.9	10	3.0 x 3.0 x 0.9	8	3.3 x 3.3 x 1.0
TISON-8		**TISON-8 (power stage 5x6)**		**TISON-8-4 (Power Block)**		**TSON-8-1**		**TSON-8-3**		**ThinPAK 5x6 (TSON-8)**	
8	7.0 x 7.0 x 1.0	8	5.0 x 6.0 x 1.0	8	5.0 x 6.0 x 1.0	8	3.0 x 3.0 x 1.0	8	5.0 x 6.0 x 1.0	8	6.15 x 5.33 x 1.0
TSON-10		**TSNP-6-13**		**ThinPAK 8x8 (VSON-4)**		**VDSON-8**		**WSON-6-1**		**WSON-8-3**	
10	3.3 x 3.3 x 1.0	6	1.5 x 1 x 0.375	4	8.0 x 8.0 x 1.0	8	4.0 x 4.0 x 0.9	6	3 x 3 x 0.75	8	3 x 3 x 0.75
WSON-10		**DirectFET™ Small Can**		**DirectFET™ Medium Can**		**DirectFET™ Large Can**		**Package (JEITA-code)**			
10	4.0 x 4.0 x 0.8	V	4.8 x 3.8 x 0.65	V	6.3 x 4.9 x 0.65	V	9.1 x 6.98 x 0.71	X	L x W x H		
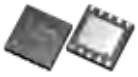								| pin-count V = Variable number of pins All dimensions in mm			

All products are RoHS Compliant.

388

IQFN-27-2		IQFN-30 (DrMOS 4x4)		IQFN-31 (DrMOS 5x5)		IQFN-36		IQFN-39		IQFN-40	
27	3.3 x 6.0 x 0.9	30	4.0 x 4.0 x 1.0	31	5.0 x 5.0 x 0.8	36	7.5 x 6.0 x 0.9	39	5.0 x 6.0 x 0.9	40	6.0 x 6.0 x 0.8
SO-8/SO-8 dual		SO-16/12		SO-14		SO-16		SO-18		DSO-12	
8	5.0 x 6.0 x 1.75	12	10.0 x 6.0 x 1.75	14	8.75 x 6.0 x 1.75	16	10.0 x 6.0 x 1.75	18	12.8 x 10.3 x 2.65	12	10.3 x 7.8 x 2.6 (max)
DSO-16-30 (300 mil)		DSO-24		SSOP-24		TDSO-16		SO-19		SO-20	
16	10.3 x 7.5 x 2.35	24	10.5 x 15.6 x 2.65 (max)	24	6 x 8.65 x 1.75 (max)	16	5.0 x 6.0 x 1.2	19	12.8 x 10.3 x 2.65	20	12.8 x 10.3 x 2.65
DSO-28		SO-36		TSSOP-28		TSSOP-48		LFBGA-516-5		LFBGA-292-6	
28	18.1 x 10.3 x 2.65	36	15.9 x 11.0 x 3.5	28	9.7 x 6.4 x 1.2	48	12.5 x 6.1 x 1.1	516	25.3 x 25.3 x 2.8	292	17.3 x 17.3 x 2.35
BGA-416-26		TFLGA-13-1		LQFP-176-22		LQFP-144-22		TQFP-144-27		TQFP-100-23	
416	27.3 x 27.3 x 3.2	13	5 x 5 x 0.96	176	26.7 x 26.7 x 2.1	144	22.4 x 22.4 x 2.2	144	18.7 x 18.7 x 1.6	100	14.5 x 14.5 x 1.5
TQFP-80-7		VQFN-40-13		VQFN-48-60		VQFN-48-78 (LTI)		VQFN-56-5/-6		Package (JEITA-code)	
80	12.6 x 12.6 x 1.5	40	5 x 5 x 0.85	48	6 x 6 x 0.85	48	7 x 7 x 0.85	56	7 x 7 x 0.9	X	L x W x H
										| pin-count V = Variable number of pins All dimensions in mm	

All products are RoHS Compliant.

389

Through-hole device (THD) technology

IPAK (TO251)		IPAK SL (TO251 SL)		IPAK short lead with ISO standoff		I²PAK (TO262)		TO220 real 2-pin		TO220 2-pin	
3	16.5 x 6.5 x 2.3	3	10.5 x 6.5 x 2.3	3	9.5 x 6.6 x 2.3	3	23.3 x 10 x 4.4	2	29.15 x 10.0 x 4.4	2	29.1 x 9.9 x 4.4
TO220 3-pin		**TO220 FullPAK**		**TO220 FullPAK Narrow Lead**		**TO220 FullPAK Wide Creepage**		**TO220-6-46**		**TO220-6-47**	
3	28.8 x 10 x 4.4	3	29.2 x 10.3 x 4.7	3	29.6 x 10.5 x 4.7	3	28.85 x 11 x 4.7	6	21.7 x 9.9 x 4.4	6	26.1 x 9.9 x 4.4
TO-247		**TO-247-3-Al**		**TO-247 4-pin**		**DIP-7**		**DIP-8**		**DIP-14**	
3	41 x 16 x 5	3	41.3 x 10.9 x 5.18	4	40.15 x 15.9 x 5.0	7	9.52 x 8.9 x 4.37	8	9.52 x 8.9 x 4.37	14	19.5 x 8.9 x 4.37
DIP-20		**Super220**		**Super247**		**SSO-3-9**		**SSO-3-10**		**SSO-4-1**	
20	24.6 x 9.9 x 4.2	3	28.25 x 10.5 x 4.5	3	34.6 x 15.6 x 5	3	A: 3.71 x 5.34 x 1 B: 2.68 x 5.34 x 1.2	3	4.06 x 1.5 x 4.05	4	5.34 x 1.0 x 3.71
						A B					
TO92S-3-1		**TO92S-3-2**		**Package (JEITA-code)**							
3	4.0 x 1.52 x 3.15	3	4.0 x 1.52 x 3.15	X	L x W x H						
				| pin-count V = Variable number of pins All dimensions in mm							

All products are RoHS Compliant.

390

Infineon support for packages

Useful links and helpful information

Further information, datasheets and documents

www.infineon.com/packages

Infineon powerful support

Useful links and helpful information

General support

www.infineon.com/support
www.infineon.com/quality
www.infineon.com/packages
www.infineon.com/green
www.infineon.com/opn

Tools, desks and more

www.infineon.com/solutionfinder
www.infineon.com/lightdesk
www.infineon.com/webinars

Request reliability (FIT) data
http://infineon-community.com/FIT_1

Register for the Newsletter4Engineers
http://infineon-community.com/Newsletter4Engineers

A world leader in semiconductor solutions

Our vision

We are the link between the real and the digital world.

Our values

We commit
We partner
We innovate
We perform

Our mission

We make life easier, safer and greener.

Part of your life. Part of tomorrow.

The Infineon Partner Program

Together we win

Find solutions from our partners to accelerate your business of tomorrow. Infineon's global network of partners are experts in designing products, solutions or services leveraging Infineon components in 5 key areas: software, hardware, services, tools & end-applications.

The Infineon Partner Program is a global ecosystem of qualified companies, offering knowledge and experience to enable and implement Infineon products. Partners from the Infineon Partner Ecosystem help design your device and application based on our components. They have been selected by us on the basis of their competence and ability to design and deliver strong and trustworthy solutions, especially for new technologies and use cases. Their knowledge and experience spans areas as diverse as hardware, software, tools, services and target applications.

Hardware	Software	Tools	Services	End Application
Partners manufacturing electronic components, demo boards and turnkey modules	Partners programming various types of software, algorithms and operating systems	Partners designing computer programs for the development of embedded systems	Partners providing cloud and engineering services, application support or trainings	Partners creating end products and related applications
... jointly we create and commercialize value added solutions, while reaching new buyers	... jointly we enhance our portfolio with complementary components and expand technology know how	... jointly we enable a complete and immersive development experience for customers	... jointly we build up engineering capabilities and offer it to a world class customer network	... jointly we provide customers with state of the art solutions and innovative use cases

Find out more information about the partner program and the latest news around our partners at Infineon Partner Ecosystem Website .

Looking for specific partner solution in your region? Our Partner Finder provides an overview of our partners and their offerings. Simply specify your search in the dropdown menu and browse through the texts, company logo, and partner signet to navigate directly to the respective website for further information.

Further information about Infineon partner solutions, you can also find under the "partner tab" on the product and application pages .

infineon.com/partners

Service hotline

Infineon offers its toll-free 0800/4001 service hotline as one central number, available 24/7 in English, Mandarin and German.

- Germany ..... 0800 951 951 951 (German/English)
- China, mainland ..... 4001 200 951 (Mandarin/English)
- India ..... 000 800 4402 951 (English)
- USA ..... 1-866 951 9519 (English/German)
- Other countries ..... 00 * 800 951 951 951 (English/German)
- Direct access ..... +49 89 234-0 (interconnection fee, German/English)

* Please note: Some countries may require you to dial a code other than “00” to access this international number.
Please visit www.infineon.com/service for your country!

Mobile product catalog

Mobile app for iOS and Android.

www.infineon.com

Published by
Infineon Technologies Austria AG
9500 Villach, Austria

© 2021 Infineon Technologies AG.
All Rights Reserved.

Document number: B131-I1180-V1-7600-EU-EC
Date: 05 / 2021

Please note!
This Document is for information purposes only and any information given herein shall in no event be regarded as a warranty, guarantee or description of any functionality, conditions and/or quality of our products or any suitability for a particular purpose. With regard to the technical specifications of our products, we kindly ask you to refer to the relevant product data sheets provided by us. Our customers and their technical departments are required to evaluate the suitability of our products for the intended application.

We reserve the right to change this document and/or the information given herein at any time.

Additional information
For further information on technologies, our products, the application of our products, delivery terms and conditions and/or prices, please contact your nearest Infineon Technologies office (www.infineon.com).

Warnings
Due to technical requirements, our products may contain dangerous substances. For information on the types in question, please contact your nearest Infineon Technologies office.

Except as otherwise explicitly approved by us in a written document signed by authorized representatives of Infineon Technologies, our products may not be used in any life-endangering applications, including but not limited to medical, nuclear, military, life-critical or any other applications where a failure of the product or any consequences of the use thereof can result in personal injury.

Looking for pricing, stock, or lifecycle information?

Click below to explore more details on WIN SOURCE:

- View TC223S16F133FACKXUMA1 on WIN SOURCE
- Infineon Technologies Information

Optimize Your Supply Chain with WIN SOURCE Solutions

- Global Sourcing Solution
- Obsolete Management
- Cost Control Management
- Shortage Management
- Alternative Solution
- Excess Inventory Management