THE DATASHEET OF

IRF2804STRL7PP

www.win-source.net 0086-755-83957316

PD - 96891

International
IOR Rectifier

AUTOMOTIVE MOSFET

IRF2804S-7P

HEXFET® Power MOSFET

Features

- Advanced Process Technology
- Ultra Low On-Resistance
- 175°C Operating Temperature
- Fast Switching
- Repetitive Avalanche Allowed up to Tjmax

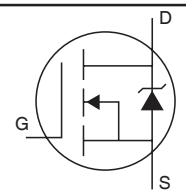

S (Pin 2, 3 ,5,6,7)
G (Pin 1)

V_{DSS} = 40V

$R_{DS(on)}$ = 1.6mΩ

I_D = 160A

Description

Specifically designed for Automotive applications, this HEXFET® Power MOSFET utilizes the latest processing techniques to achieve extremely low on-resistance per silicon area. Additional features of this design are a 175°C junction operating temperature, fast switching speed and improved repetitive avalanche rating . These features combine to make this design an extremely efficient and reliable device for use in Automotive applications and a wide variety of other applications.

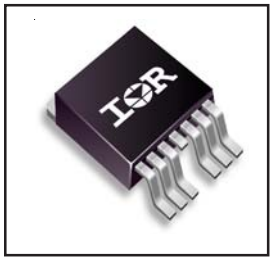

Absolute Maximum Ratings

	Parameter	Max.	Units
I_D @ T_C = 25°C	Continuous Drain Current, V_{GS} @ 10V (Silicon Limited)	320	A
I_D @ T_C = 100°C	Continuous Drain Current, V_{GS} @ 10V (See Fig. 9)	230	
I_D @ T_C = 25°C	Continuous Drain Current, V_{GS} @ 10V (Package Limited)	160	
I_{DM}	Pulsed Drain Current ①	1360	
P_D @T_C = 25°C	Maximum Power Dissipation	330	W
	Linear Derating Factor	2.2	W/°C
V_{GS}	Gate-to-Source Voltage	± 20	V
E_{AS}	Single Pulse Avalanche Energy (Thermally Limited) ②	630	mJ
E_{AS} (tested)	Single Pulse Avalanche Energy Tested Value ⑥	1050	
I_{AR}	Avalanche Current ①	See Fig.12a,12b,15,16	A
E_{AR}	Repetitive Avalanche Energy ⑤		mJ
T_J T_{STG}	Operating Junction and Storage Temperature Range	-55 to + 175	°C
	Soldering Temperature, for 10 seconds	300 (1.6mm from case)	
	Mounting torque, 6-32 or M3 screw	10 lbf•in (1.1N•m)	

Thermal Resistance

	Parameter	Typ.	Max.	Units
$R_{\theta JC}$	Junction-to-Case ⑧	——	0.50	°C/W
$R_{\theta CS}$	Case-to-Sink, Flat, Greased Surface	0.50	——	
$R_{\theta JA}$	Junction-to-Ambient ⑧	——	62	
$R_{\theta JA}$	Junction-to-Ambient (PCB Mount, steady state) ⑦⑧	——	40	

HEXFET® is a registered trademark of International Rectifier.

9/6/04

Static @ T_J = 25°C (unless otherwise specified)

	Parameter	Min.	Typ.	Max.	Units	Conditions
$V_{(BR)DSS}$	Drain-to-Source Breakdown Voltage	40	—	—	V	V_{GS} = 0V, I_D = 250μA
$\Delta BV_{DSS}/\Delta T_J$	Breakdown Voltage Temp. Coefficient	—	0.028	—	V/°C	Reference to 25°C, I_D = 1mA
$R_{DS(on)}$ SMD	Static Drain-to-Source On-Resistance	—	1.2	1.6	mΩ	V_{GS} = 10V, I_D = 160A ③
$V_{GS(th)}$	Gate Threshold Voltage	2.0	—	4.0	V	V_{DS} = V_{GS}, I_D = 250μA
gfs	Forward Transconductance	220	—	—	S	V_{DS} = 10V, I_D = 160A
I_{DSS}	Drain-to-Source Leakage Current	—	—	20	μA	V_{DS} = 40V, V_{GS} = 0V
		—	—	250		V_{DS} = 40V, V_{GS} = 0V, T_J = 125°C
I_{GSS}	Gate-to-Source Forward Leakage	—	—	200	nA	V_{GS} = 20V
	Gate-to-Source Reverse Leakage	—	—	-200		V_{GS} = -20V
Q_g	Total Gate Charge	—	170	260	nC	I_D = 160A
Q_{gs}	Gate-to-Source Charge	—	63	—		V_{DS} = 32V
Q_{gd}	Gate-to-Drain ("Miller") Charge	—	71	—		V_{GS} = 10V ③
$t_{d(on)}$	Turn-On Delay Time	—	17	—	ns	V_{DD} = 20V
t_r	Rise Time	—	150	—		I_D = 160A
$t_{d(off)}$	Turn-Off Delay Time	—	110	—		R_G = 2.6Ω
t_f	Fall Time	—	105	—		V_{GS} = 10V ②
L_D	Internal Drain Inductance	—	4.5	—	nH	Between lead, 6mm (0.25in.)
L_S	Internal Source Inductance	—	7.5	—		from package and center of die contact
C_{iss}	Input Capacitance	—	6930	—	pF	V_{GS} = 0V
C_{oss}	Output Capacitance	—	1750	—		V_{DS} = 25V
C_{rss}	Reverse Transfer Capacitance	—	970	—		ƒ = 1.0MHz, See Fig. 5
C_{oss}	Output Capacitance	—	5740	—		V_{GS} = 0V, V_{DS} = 1.0V, ƒ = 1.0MHz
C_{oss}	Output Capacitance	—	1570	—		V_{GS} = 0V, V_{DS} = 32V, ƒ = 1.0MHz
C_{oss} eff.	Effective Output Capacitance	—	2340	—		V_{GS} = 0V, V_{DS} = 0V to 32V

Diode Characteristics

	Parameter	Min.	Typ.	Max.	Units	Conditions
I_S	Continuous Source Current (Body Diode)	—	—	320	A	MOSFET symbol showing the integral reverse p-n junction diode.
I_{SM}	Pulsed Source Current (Body Diode) ①	—	—	1360		
V_{SD}	Diode Forward Voltage	—	—	1.3	V	T_J = 25°C, I_S = 160A, V_{GS} = 0V ③
t_{rr}	Reverse Recovery Time	—	43	65	ns	T_J = 25°C, I_F = 160A, V_{DD} = 20V
Q_{rr}	Reverse Recovery Charge	—	48	72	nC	di/dt = 100A/μs ③

Notes:

① Repetitive rating; pulse width limited by max. junction temperature. (See fig. 11).

② Limited by T_{Jmax}, starting T_J = 25°C, L=0.049mH, R_G = 25Ω, I_{AS} = 160A, V_{GS} =10V. Part not recommended for use above this value.

③ Pulse width ≤ 1.0ms; duty cycle ≤ 2%.

④ C_{oss} eff. is a fixed capacitance that gives the same charging time as C_{oss} while V_{DS} is rising from 0 to 80% V_{DSS}.

⑤ Limited by T_{Jmax} , see Fig.12a, 12b, 15, 16 for typical repetitive avalanche performance.

⑥ This value determined from sample failure population. 100% tested to this value in production.

⑦ This is applied to D^2Pak, when mounted on 1" square PCB (FR-4 or G-10 Material). For recommended footprint and soldering techniques refer to application note #AN-994.

⑧ R_θ is measured at T_J of approximately 90°C.

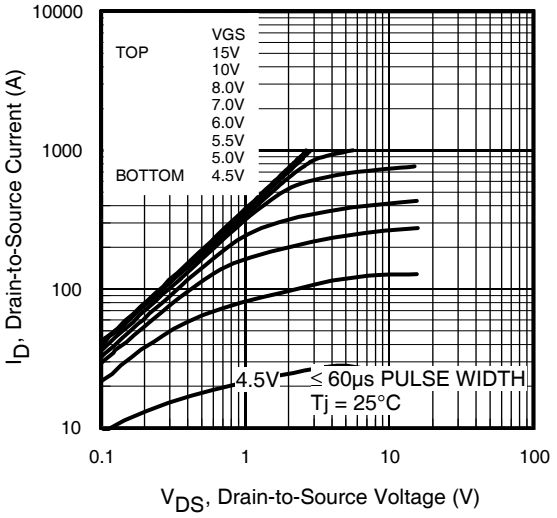

Fig 1. Typical Output Characteristics

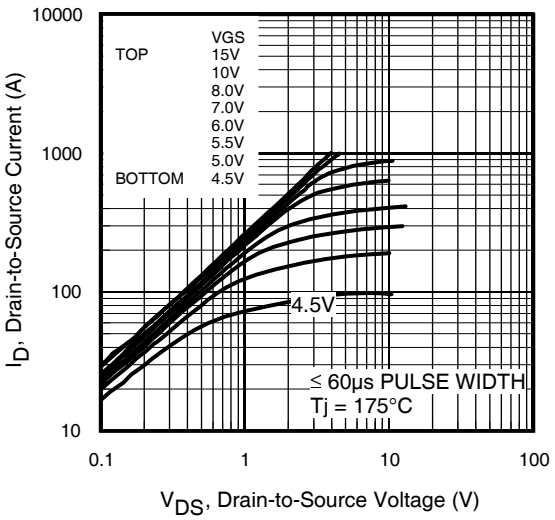

Fig 2. Typical Output Characteristics

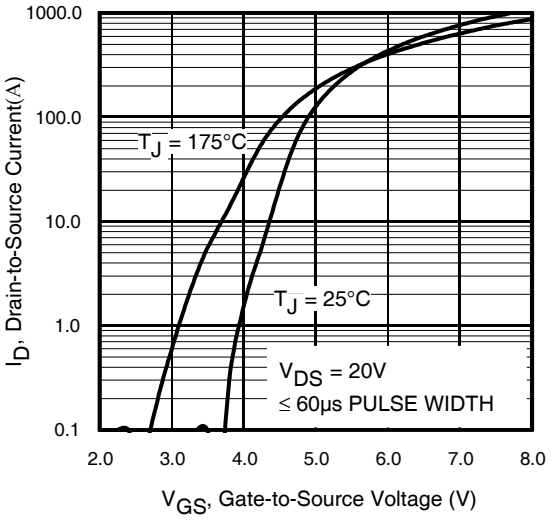

Fig 3. Typical Transfer Characteristics

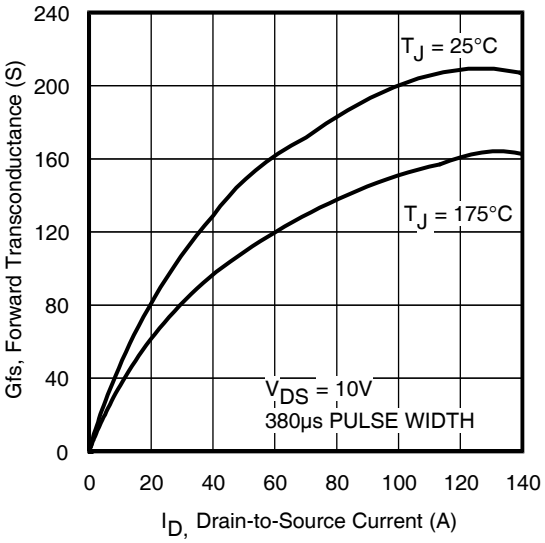

Fig 4. Typical Forward Transconductance vs. Drain Current

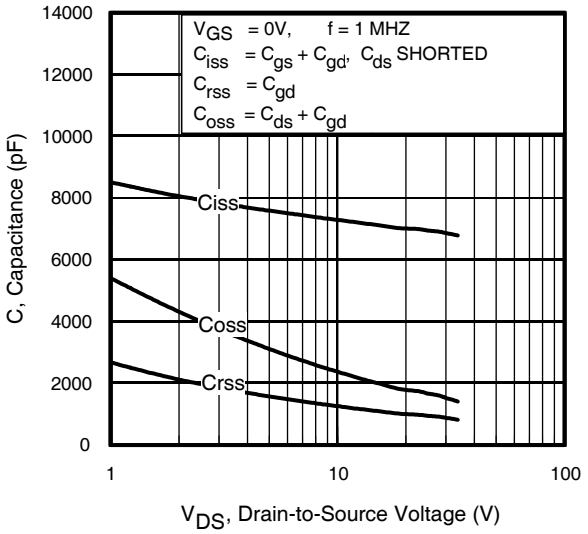

Fig 5. Typical Capacitance vs. Drain-to-Source Voltage

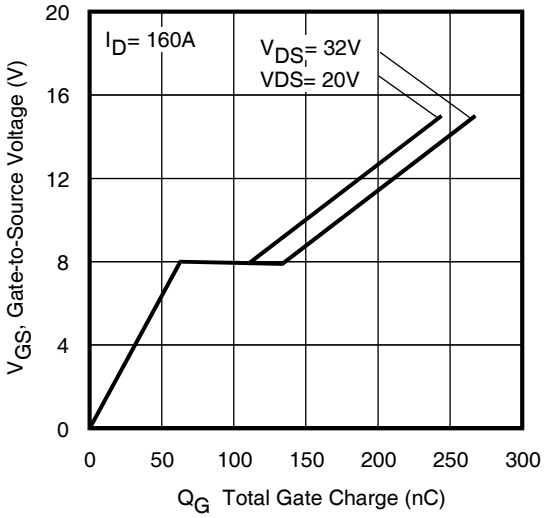

Fig 6. Typical Gate Charge vs. Gate-to-Source Voltage

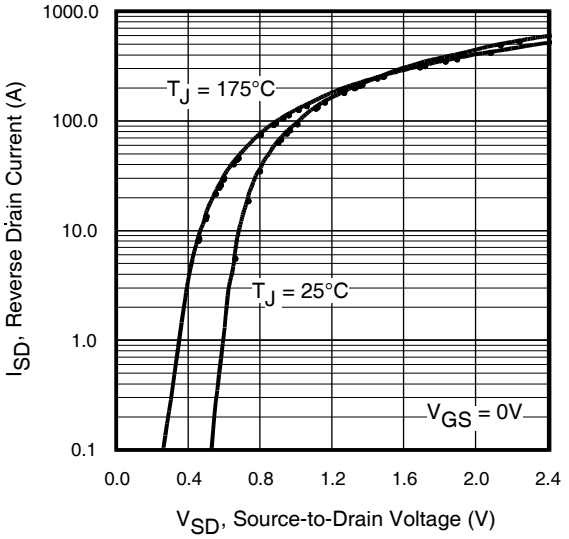

Fig 7. Typical Source-Drain Diode Forward Voltage

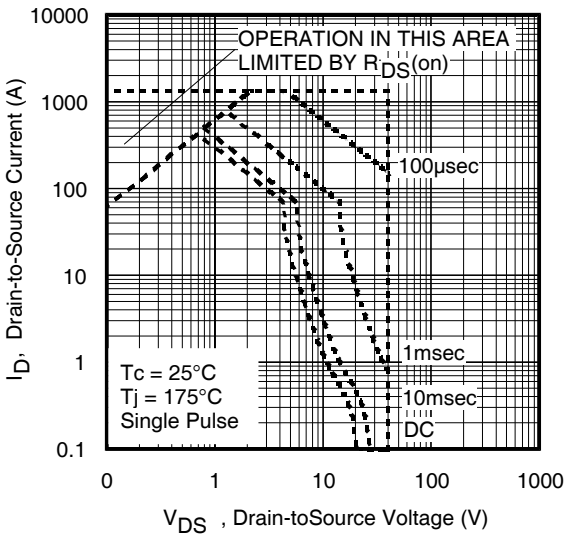

Fig 8. Maximum Safe Operating Area

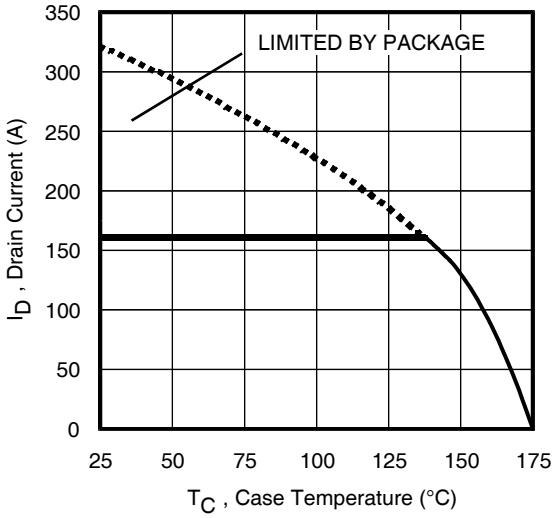

Fig 9. Maximum Drain Current vs. Case Temperature

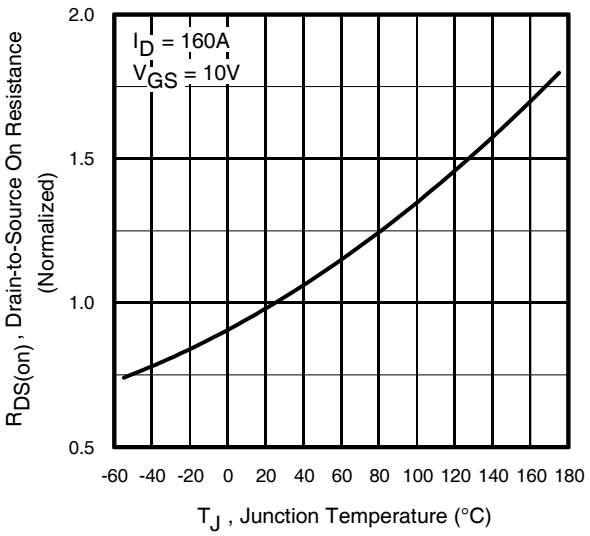

Fig 10. Normalized On-Resistance vs. Temperature

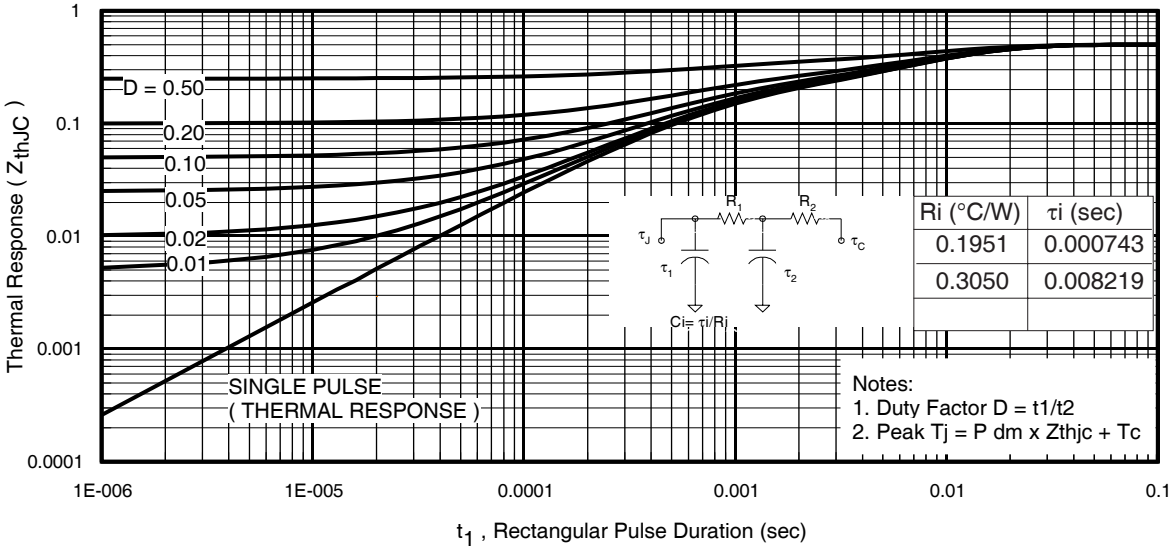

Ri (°C/W)	τi (sec)
0.1951	0.000743
0.3050	0.008219

Fig 11. Maximum Effective Transient Thermal Impedance, Junction-to-Case

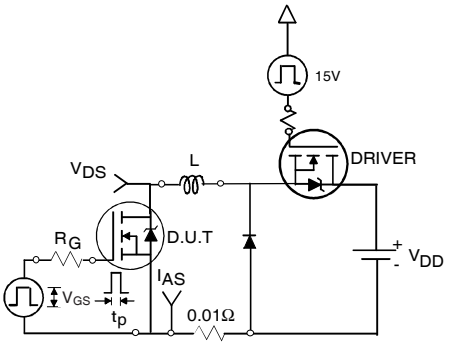

Fig 12a. Unclamped Inductive Test Circuit

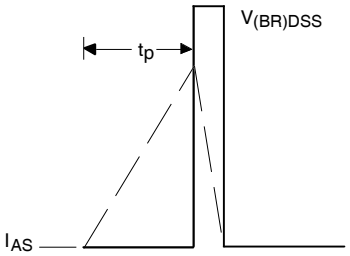

Fig 12b. Unclamped Inductive Waveforms

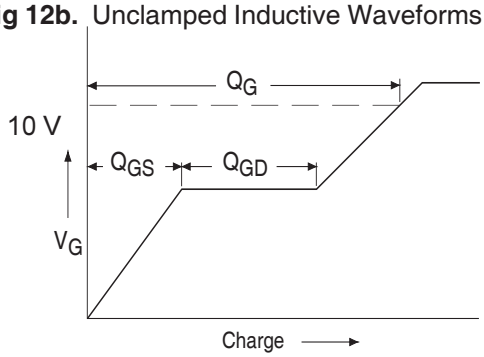

Fig 13a. Basic Gate Charge Waveform

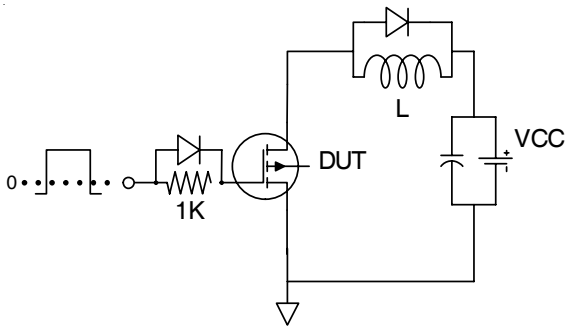

Fig 13b. Gate Charge Test Circuit

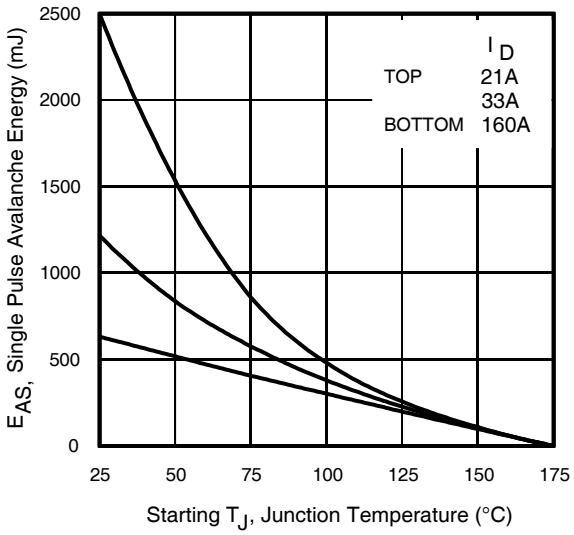

Fig 12c. Maximum Avalanche Energy vs. Drain Current

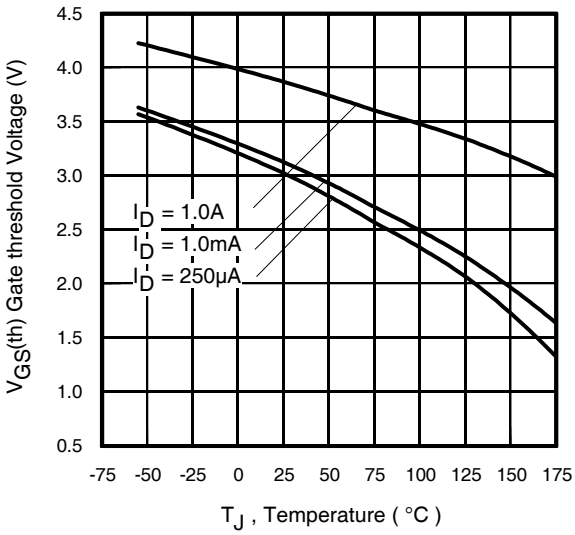

Fig 14. Threshold Voltage vs. Temperature

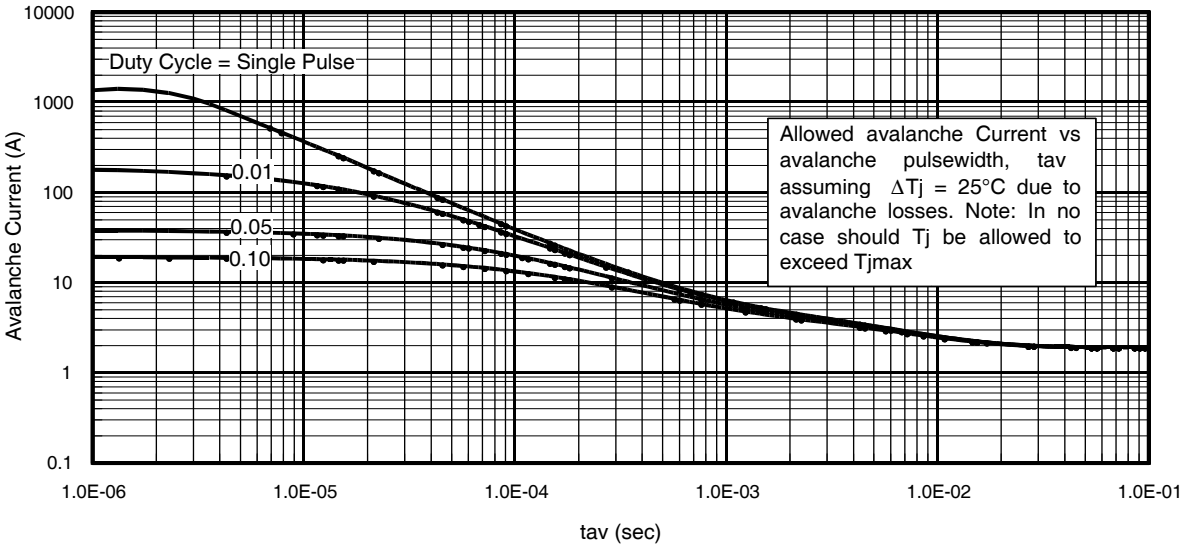

Fig 15. Typical Avalanche Current vs.Pulsewidth

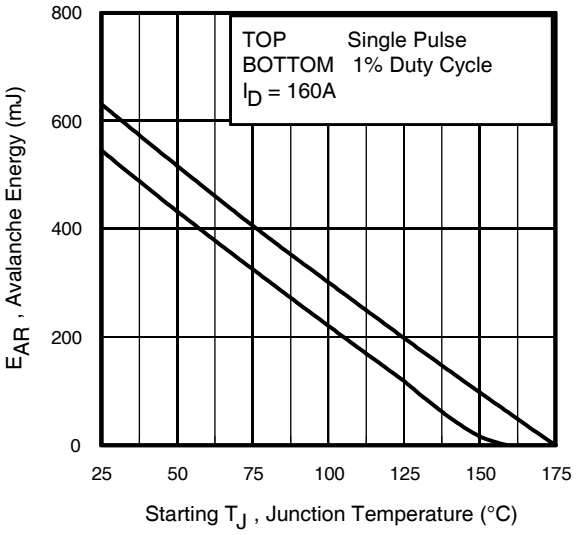

Fig 16. Maximum Avalanche Energy vs. Temperature

Notes on Repetitive Avalanche Curves , Figures 15, 16:
(For further info, see AN-1005 at www.irf.com)

1. Avalanche failures assumption:
   Purely a thermal phenomenon and failure occurs at a temperature far in excess of T_{jmax}. This is validated for every part type.
2. Safe operation in Avalanche is allowed as long as T_{jmax} is not exceeded.
3. Equation below based on circuit and waveforms shown in Figures 12a, 12b.
4. $P_{D\ (ave)}$ = Average power dissipation per single avalanche pulse.
5. BV = Rated breakdown voltage (1.3 factor accounts for voltage increase during avalanche).
6. I_{av} = Allowable avalanche current.
7. ΔT = Allowable rise in junction temperature, not to exceed T_{jmax} (assumed as 25°C in Figure 15, 16).
   t_{av} = Average time in avalanche.
   D = Duty cycle in avalanche = $t_{av} \cdot f$
   $Z_{thJC}(D, t_{av})$ = Transient thermal resistance, see figure 11)

$$P_{D\ (ave)} = 1/2\ (1.3 \cdot BV \cdot I_{av}) = \Delta T / Z_{thJC}$$
$$I_{av} = 2\Delta T / [1.3 \cdot BV \cdot Z_{th}]$$
$$E_{AS\ (AR)} = P_{D\ (ave)} \cdot t_{av}$$

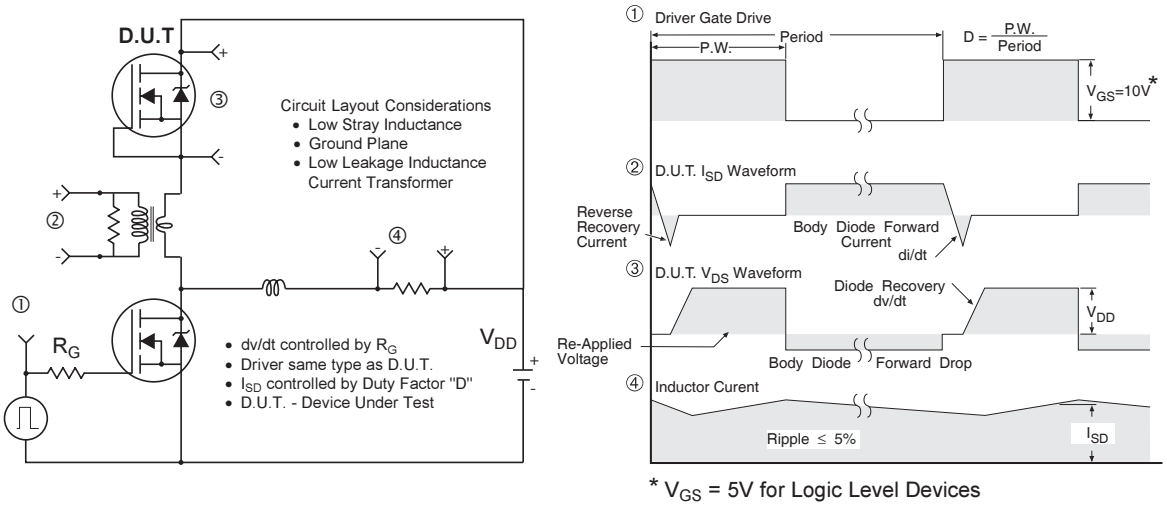

Fig 17. Peak Diode Recovery dv/dt Test Circuit for N-Channel HEXFET® Power MOSFETs

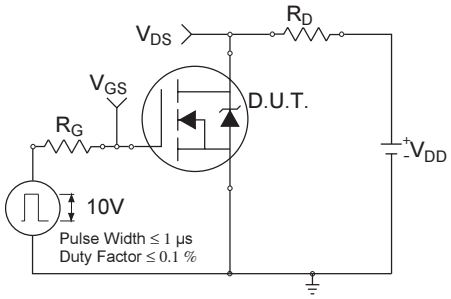

Fig 18a. Switching Time Test Circuit

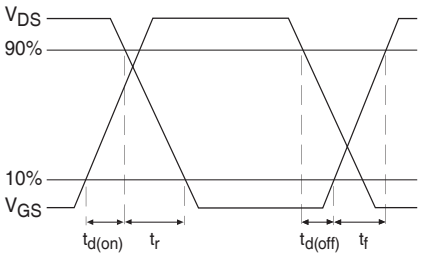

Fig 18b. Switching Time Waveforms

D²Pak - 7 Pin Package Outline

Dimensions are shown in millimeters (inches)

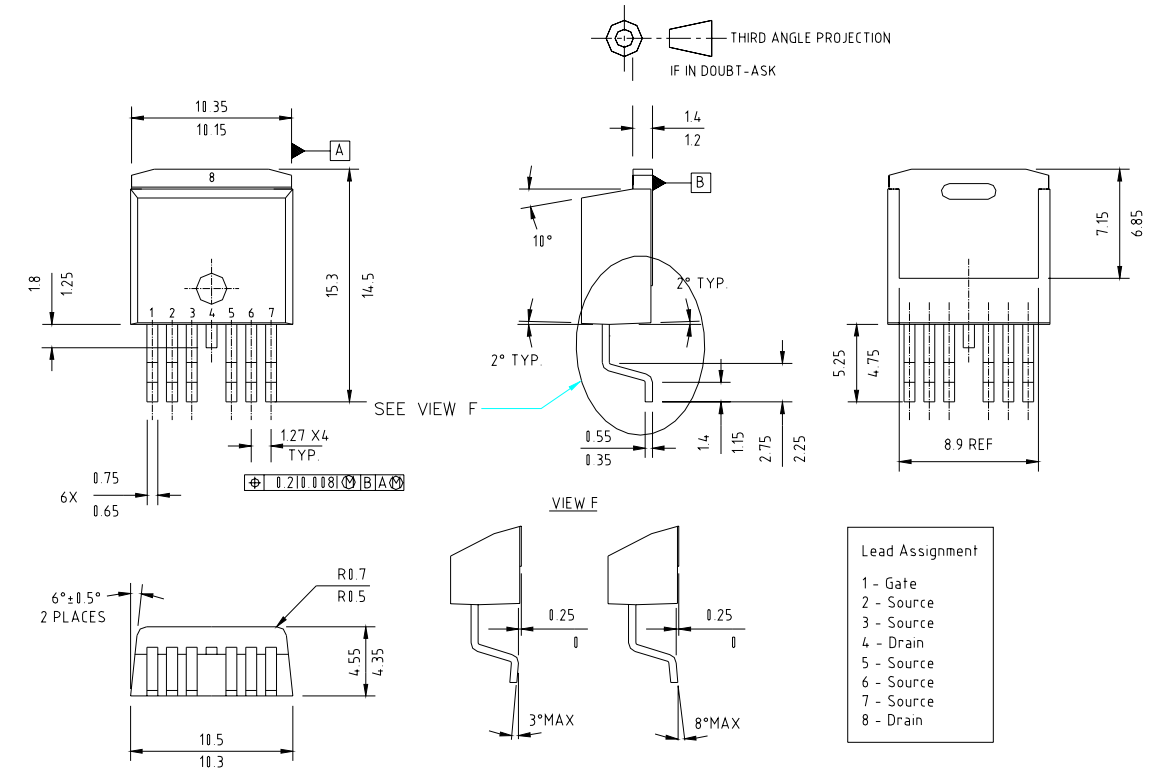

RECOMMENDED FOOTPRINT

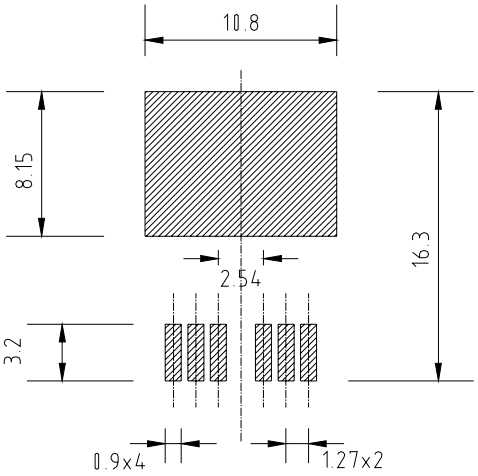

REV	DATE	MODIFICATION
-	18/03/03	RAISED IAW ECN 3426
Rev1	07/04/03	CHANGED IAW ECN 3438
A	23/04/04	ADD LEAD ASSIGNMENT

D^{2}Pak - 7 Pin Tape and Reel

NOTES, TAPE & REEL, LABELLING:

1. TAPE AND REEL.
   - 1.1 REEL SIZE 13 INCH DIAMETER.
   - 1.2 EACH REEL CONTAINING 800 DEVICES.
   - 1.3 THERE SHALL BE A MINIMUM OF 42 SEALED POCKETS CONTAINED IN THE LEADER AND A MINIMUM OF 15 SEALED POCKETS IN THE TRAILER.
   - 1.4 PEEL STRENGTH MUST CONFORM TO THE SPEC. NO. 71-9667.
   - 1.5 PART ORIENTATION SHALL BE AS SHOWN BELOW.
   - 1.6 REEL MAY CONTAIN A MAXIMUM OF TWO UNIQUE LOT CODE/DATE CODE COMBINATIONS. REWORKED REELS MAY CONTAIN A MAXIMUM OF THREE UNIQUE LOT CODE/DATE CODE COMBINATIONS. HOWEVER, THE LOT CODES AND DATE CODES WITH THEIR RESPECTIVE QUANTITIES SHALL APPEAR ON THE BAR CODE LABEL FOR THE AFFECTED REEL.

2. LABELLING (REEL AND SHIPPING BAG).
   - 2.1 CUST. PART NUMBER (BAR CODE): IRF2804STRL-7P
   - 2.2 CUST. PART NUMBER (TEXT CODE): IRF2804STRL-7P
   - 2.3 I.R. PART NUMBER: IRF2804STRL-7P
   - 2.4 QUANTITY:
   - 2.5 VENDOR CODE: IR
   - 2.6 LOT CODE:
   - 2.7 DATE CODE:

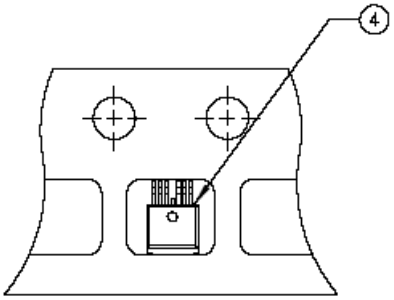

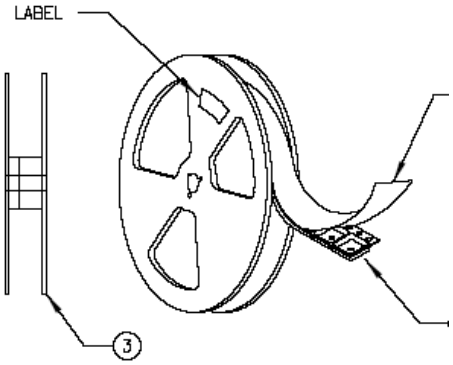

Data and specifications subject to change without notice.
This product has been designed and qualified for the Automotive [Q101]market.
Qualification Standards can be found on IR's Web site.

International
IOR Rectifier

IR WORLD HEADQUARTERS: 233 Kansas St., El Segundo, California 90245, USA Tel: (310) 252-7105
TAC Fax: (310) 252-7903
Visit us at www.irf.com for sales contact information. 09/04

Looking for pricing, stock, or lifecycle information?

Click below to explore more details on WIN SOURCE:

- View IRF2804STRL7PP on WIN SOURCE
- Infineon Technologies Information

Optimize Your Supply Chain with WIN SOURCE Solutions

- Global Sourcing Solution
- Obsolete Management
- Cost Control Management
- Shortage Management
- Alternative Solution
- Excess Inventory Management