THE DATASHEET OF

JS28F160C3BD70

www.win-source.net 0086-755-83957316

Intel® Advanced+ Boot Block Flash Memory (C3)

28F800C3, 28F160C3, 28F320C3, 28F640C3 (x16)

Datasheet

Product Features

- **Flexible SmartVoltage Technology**
  - 2.7 V– 3.6 V Read/Program/Erase
  - 12 V for Fast Production Programming
- **1.65 V–2.5 V or 2.7 V–3.6 V I/O Option**
  - Reduces Overall System Power
- **High Performance**
  - 2.7 V– 3.6 V: 70 ns Max Access Time
- **Optimized Architecture for Code Plus Data Storage**
  - Eight 4 Kword Blocks, Top or Bottom Parameter Boot
  - Up to One Hundred-Twenty-Seven 32 Kword Blocks
  - Fast Program Suspend Capability
  - Fast Erase Suspend Capability
- **Flexible Block Locking**
  - Lock/Unlock Any Block
  - Full Protection on Power-Up
  - WP# Pin for Hardware Block Protection
- **Low Power Consumption**
  - 9 mA Typical Read
  - 7 A Typical Standby with Automatic Power Savings Feature (APS)
- **Extended Temperature Operation**
  - –40 °C to +85 °C
- **128-bit Protection Register**
  - 64 bit Unique Device Identifier
  - 64 bit User Programmable OTP Cells
- **Extended Cycling Capability**
  - Minimum 100,000 Block Erase Cycles
- **Software**
  - Intel® Flash Data Integrator (FDI)
  - Supports Top or Bottom Boot Storage, Streaming Data (e.g., voice)
  - Intel Basic Command Set
  - Common Flash Interface (CFI)
- **Standard Surface Mount Packaging**
  - 48-Ball µBGA*/VFBGA
  - 64-Ball Easy BGA Packages
  - 48-Lead TSOP Package
- **ETOX™ VIII (0.13 µm) Flash Technology**
  - 16, 32 Mbit
- **ETOX™ VII (0.18 µm) Flash Technology**
  - 16, 32, 64 Mbit
- **ETOX™ VI (0.25 µm) Flash Technology**
  - 8, 16 and 32 Mbit

The Intel® Advanced+ Book Block Flash Memory (C3) device, manufactured on Intel's latest 0.13 µm and 0.18 µm technologies, represents a feature-rich solution for low-power applications. The C3 device incorporates low-voltage capability (3 V read, program, and erase) with high-speed, low-power operation. Flexible block locking allows any block to be independently locked or unlocked. Add to this the Intel® Flash Data Integrator (FDI) software and you have a cost-effective, flexible, monolithic code plus data storage solution. Intel® Advanced+ Boot Block Flash Memory (C3) products will be available in 48-lead TSOP, 48-ball CSP, and 64-ball Easy BGA packages. Additional information on this product family can be obtained by accessing the Intel® Flash website: http://www.intel.com/design/flash.

Notice: This specification is subject to change without notice. Verify with your local Intel sales office that you have the latest datasheet before finalizing a design.

Order Number: 290645-017
October 2003

INFORMATION IN THIS DOCUMENT IS PROVIDED IN CONNECTION WITH INTEL PRODUCTS. NO LICENSE, EXPRESS OR IMPLIED, BY ESTOPPEL OR OTHERWISE, TO ANY INTELLECTUAL PROPERTY RIGHTS IS GRANTED BY THIS DOCUMENT. EXCEPT AS PROVIDED IN INTEL'S TERMS AND CONDITIONS OF SALE FOR SUCH PRODUCTS, INTEL ASSUMES NO LIABILITY WHATSOEVER, AND INTEL DISCLAIMS ANY EXPRESS OR IMPLIED WARRANTY, RELATING TO SALE AND/OR USE OF INTEL PRODUCTS INCLUDING LIABILITY OR WARRANTIES RELATING TO FITNESS FOR A PARTICULAR PURPOSE, MERCHANTABILITY, OR INFRINGEMENT OF ANY PATENT, COPYRIGHT OR OTHER INTELLECTUAL PROPERTY RIGHT. Intel products are not intended for use in medical, life saving, or life sustaining applications.

Intel may make changes to specifications and product descriptions at any time, without notice.

Designers must not rely on the absence or characteristics of any features or instructions marked "reserved" or "undefined." Intel reserves these for future definition and shall have no responsibility whatsoever for conflicts or incompatibilities arising from future changes to them.

The 28F800C3, 28F160C3, 28F320C3, 28F640C3 may contain design defects or errors known as errata which may cause the product to deviate from published specifications. Current characterized errata are available on request.

Contact your local Intel sales office or your distributor to obtain the latest specifications and before placing your product order.

Copies of documents which have an ordering number and are referenced in this document, or other Intel literature may be obtained by calling 1-800-548-4725 or by visiting Intel's website at http://www.intel.com.

Copyright © Intel Corporation, 2003

*Third-party brands and names are the property of their respective owners.

Contents

1.0 Introduction 7

1.1 Document Purpose 7
1.2 Nomenclature 7
1.3 Conventions 7

2.0 Device Description 8

2.1 Product Overview 8
2.2 Ballout Diagram 8
2.3 Signal Descriptions 13
2.4 Block Diagram 14
2.5 Memory Map 15

3.0 Device Operations 17

3.1 Bus Operations 17
3.1.1 Read 17
3.1.2 Write 17
3.1.3 Output Disable 17
3.1.4 Standby 18
3.1.5 Reset 18

4.0 Modes of Operation 19

4.1 Read Mode 19
4.1.1 Read Array 19
4.1.2 Read Identifier 19
4.1.3 CFI Query 20
4.1.4 Read Status Register 20
4.1.4.1 Clear Status Register 21
4.2 Program Mode 21
4.2.1 12-Volt Production Programming 21
4.2.2 Suspending and Resuming Program 22
4.3 Erase Mode 22
4.3.1 Suspending and Resuming Erase 23

5.0 Security Modes 27

5.1 Flexible Block Locking 27
5.1.1 Locking Operation 28
5.1.1.1 Locked State 28
5.1.1.2 Unlocked State 28
5.1.1.3 Lock-Down State 28
5.2 Reading Block-Lock Status 28
5.3 Locking Operations during Erase Suspend 29
5.4 Status Register Error Checking 29
5.5 128-Bit Protection Register 29
5.5.1 Reading the Protection Register 30
5.5.2 Programming the Protection Register 30
5.5.3 Locking the Protection Register 30
5.6 V_{PP} Program and Erase Voltages 30

5.6.1 Program Protection 31

6.0 Power Consumption 32

6.1 Active Power (Program/Erase/Read) 32
6.2 Automatic Power Savings (APS) 32
6.3 Standby Power 32
6.4 Deep Power-Down Mode 32
6.5 Power and Reset Considerations 33
6.5.1 Power-Up/Down Characteristics 33
6.5.2 RP# Connected to System Reset 33
6.5.3 VCC, VPP and RP# Transitions 33
6.6 Power Supply Decoupling 34

7.0 Thermal and DC Characteristics 34

7.1 Absolute Maximum Ratings 34
7.2 Operating Conditions 35
7.3 DC Current Characteristics 35
7.4 DC Voltage Characteristics 38

8.0 AC Characteristics 39

8.1 AC Read Characteristics 39
8.2 AC Write Characteristics 43
8.3 Erase and Program Timings 47
8.4 Reset Specifications 48
8.5 AC I/O Test Conditions 49
8.6 Device Capacitance 49

Appendix A Write State Machine States 50

Appendix B Flow Charts 52

Appendix C Common Flash Interface 58

Appendix D Mechanical Specifications 64

Appendix E Additional Information 67

Appendix F Ordering Information 68

Revision History

Date of Revision	Version	Description
05/12/98	-001	Original version
07/21/98	-002	48-Lead TSOP package diagram change µBGA package diagrams change 32-Mbit ordering information change (Section 6) CFI Query Structure Output Table Change (Table C2) CFI Primary-Vendor Specific Extended Query Table Change for Optional Features and Command Support change (Table C8) Protection Register Address Change I_{PPD} test conditions clarification (Section 4.3) µBGA package top side mark information clarification (Section 6)
10/03/98	-003	Byte-Wide Protection Register Address change V_{IH} Specification change (Section 4.3) V_{IL} Maximum Specification change (Section 4.3) I_{CCS} test conditions clarification (Section 4.3) Added Command Sequence Error Note (Table 7) Datasheet renamed from *3 Volt Advanced Boot Block, 8-, 16-, 32-Mbit Flash Memory Family.*
12/04/98	-004	Added t_{BHWH}/t_{BHEH} and t_{QVBL} (Section 4.6) Programming the Protection Register clarification (Section 3.4.2)
12/31/98	-005	Removed all references to x8 configurations
02/24/99	-006	Removed reference to 40-Lead TSOP from front page
06/10/99	-007	Added Easy BGA package (Section 1.2) Removed 1.8 V I/O references *Locking Operations Flowchart* changed (Appendix B) Added t_{WHGL} (Section 4.6) CFI Primary Vendor-Specific Extended Query changed (Appendix C)
03/20/00	-008	Max I_{CCD} changed to 25 µA Table 10, added note indicating V_{CC}Max = 3.3 V for 32-Mbit device
04/24/00	-009	Added specifications for 0.18 micron product offerings throughout document Added 64-Mbit density
10/12/00	-010	Changed references of 32Mbit 80ns devices to 70ns devices to reflect the faster product offering. Changed VccMax=3.3V reference to indicate that the affected product is the 0.25µm 32Mbit device. Minor text edits throughout document.
7/20/01	-011	Added 1.8v I/O operation documentation where applicable Added TSOP PCN ‘Pin-1’ indicator information Changed references in 8 x 8 BGA pinout diagrams from ‘GND’ to ‘Vssq’ Added ‘Vssq’ to Pin Descriptions Information Removed 0.4 µm references in DC characteristics table Corrected 64Mb package Ordering Information from 48-uBGA to 48-VFBGA Corrected ‘bottom’ parameter block sizes to on 8Mb device to 8 x 4KWords Minor text edits throughout document
10/02/01	-012	Added specifications for 0.13 micron product offerings throughout document
2/05/02	-013	Corrected Iccw / Ippw / Icces /Ippes values. Added mechanicals for 16Mb and 64Mb Minor text edits throughout document.

Date of Revision	Version	Description
4/05/02	-014	Updated 64Mb product offerings. Updated 16Mb product offerings. Revised and corrected DC Characteristics Table. Added mechanicals for Easy BGA. Minor text edits throughout document.
3/06/03	-016	Complete technical update.
10/03	-017	Corrected information in the Device Geometry Details table, address 0x34.

1.0 Introduction

1.1 Document Purpose

This datasheet contains the specifications for the Intel® Advanced+ Boot Block Flash Memory (C3) device family. These flash memories add features such as instant block locking and protection registers that can be used to enhance the security of systems.

1.2 Nomenclature

0x	Hexadecimal prefix
0b	Binary prefix
Byte	8 bits
Word	16 bits
Kword	1024 words
Mword	1,048,576 words
Kb	1024 bits
KB	1024 bytes
Mb	1,048,576 bits
MB	1,048,576 bytes
APS	Automatic Power Savings
CUI	Command User Interface
OTP	One Time Programmable
PR	Protection Register
PRD	Protection Register Data
PLR	Protection Lock Register
RFU	Reserved for Future Use
SR	Status Register
SRD	Status Register Data
WSM	Write State Machine

1.3 Conventions

The terms **pin** and **signal** are often used interchangeably to refer to the external signal connections on the package. (*ball* is the term used for CSP).

Group Membership Brackets: Square brackets will be used to designate group membership or to define a group of signals with similar function (i.e. A[21:1], SR[4:1])

Set: When referring to registers, the term set means the bit is a logical 1.

Clear: When referring to registers, the term clear means the bit is a logical 0.

Block: A group of bits (or words) that erase simultaneously with one block erase instruction.

Main Block: A block that contains 32 Kwords.

Parameter Block: A block that contains 4 Kwords.

2.0 Device Description

This section provides an overview of the Intel® Advanced+ Boot Block Flash Memory (C3) device features, packaging, signal naming, and device architecture.

2.1 Product Overview

The C3 device provides high-performance asynchronous reads in package-compatible densities with a 16 bit data bus. Individually-erasable memory blocks are optimally sized for code and data storage. Eight 4 Kword parameter blocks are located in the boot block at either the top or bottom of the device's memory map. The rest of the memory array is grouped into 32 Kword main blocks.

The device supports read-array mode operations at various I/O voltages (1.8 V and 3 V) and erase and program operations at 3 V or 12 V VPP. With the 3 V I/O option, VCC and VPP can be tied together for a simple, ultra-low-power design. In addition to I/O voltage flexibility, the dedicated VPP input provides complete data protection when $V_{PP} \leq V_{PPLK}$.

The device features a 128-bit protection register enabling security techniques and data protection schemes through a combination of factory-programmed and user-programmable OTP data registers. Zero-latency locking/unlocking on any memory block provides instant and complete protection for critical system code and data. Additional block lock-down capability provides hardware protection where software commands alone cannot change the block's protection status.

A command User Interface(CUI) serves as the interface between the system processor and internal operation of the device. A valid command sequence issued to the CUI initiates device automation. An internal Write State Machine (WSM) automatically executes the algorithms and timings necessary for block erase, program, and lock-bit configuration operations.

The device offers three low-power saving features: Automatic Power Savings (APS), standby mode, and deep power-down mode. The device automatically enters APS mode following read cycle completion. Standby mode begins when the system deselects the flash memory by deasserting CE#. The deep power-down mode begins when RP# is asserted, which deselects the memory and places the outputs in a high-impedance state, producing ultra-low power savings. Combined, these three power-savings features significantly enhanced power consumption flexibility.

2.2 Ballout Diagram

The C3 device is available in 48-lead TSOP, 48-ball VF BGA, 48-ball µBGA, and Easy BGA packages. (Refer to Figure 1 on page 9, Figure 3 on page 11, and Figure 4 on page 12, respectively.)

Figure 1. 48-Lead TSOP Package

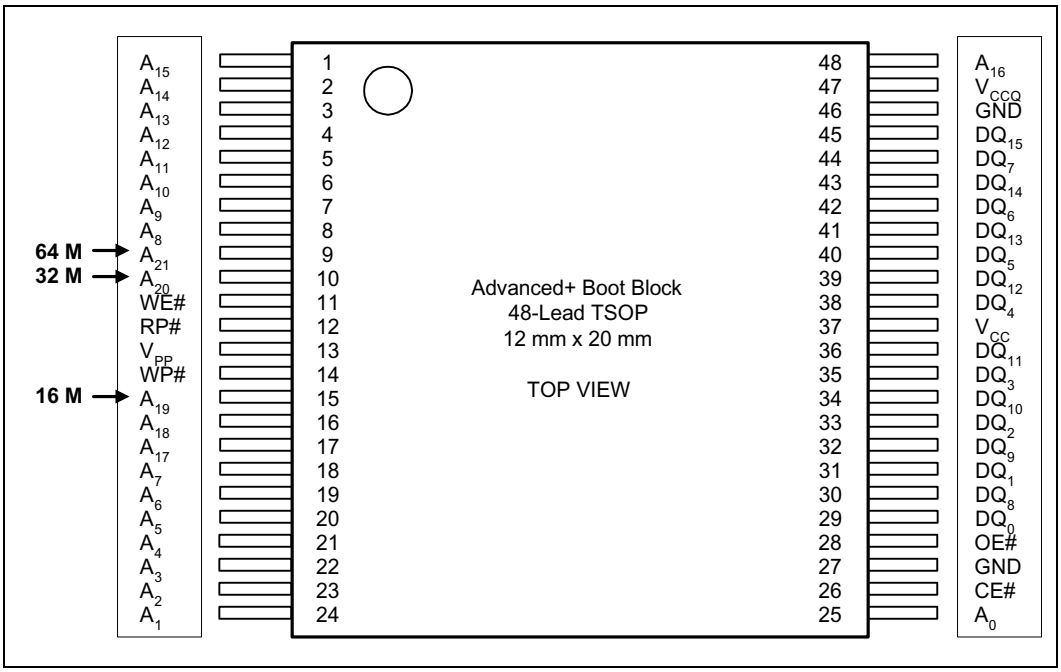

NOTES:

1. For lower densities, upper address should be treated as NC. For example, a 16-Mbit device will have NC on Pins 9 and 10.

Figure 2. Mark for Pin-1 indicator on 48-Lead 8Mb, 16Mb and 32Mb TSOP

Current Mark:

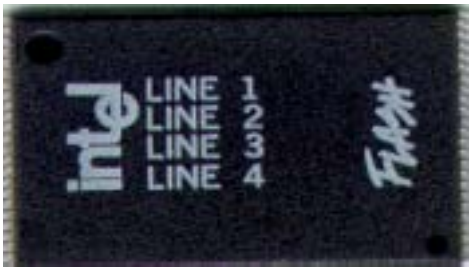

New Mark:

Note: The topside marking on 8 Mb, 16 Mb, and 32 Mb Intel® Advanced and Advanced + Boot Block 48L TSOP products will convert to a white ink triangle as a Pin 1 indicator. Products without the white triangle will continue to use a dimple as a Pin 1 indicator. There are no other changes in package size, materials, functionality, customer handling, or manufacturability. Product will continue to meet Intel stringent quality requirements. Products affected are Intel Ordering Codes shown in Table 1.

Table 1. 48-Lead TSOP

Extended 64 Mbit	Extended 32 Mbit	Extended 16 Mbit	Extended 8 Mbit
TE28F640C3TC80 TE28F640C3BC80	TE28F320C3TD70 TE28F320C3BD70 TE28F320C3TC70 TE28F320C3BC70 TE28F320C3TC90 TE28F320C3BC90 TE28F320C3TA100 TE28F320C3BA100 TE28F320C3TA110 TE28F320C3BA110	TE28F160C3TD70 TE28F160C3BD70 TE28F160C3TC80 TE28F160C3BC80 TE28F160C3TA90 TE28F160C3BA90 TE28F160C3TA110 TE28F160C3BA110	TE28F800C3TA90 TE28F800C3BA90 TE28F800C3TA110 TE28F800C3BA110

Figure 3. 48-Ball µBGA* and 48-Ball Very Fine Pitch BGA (VF BGA) Chip Size Package (Top View, Ball Down)[1,2,3]

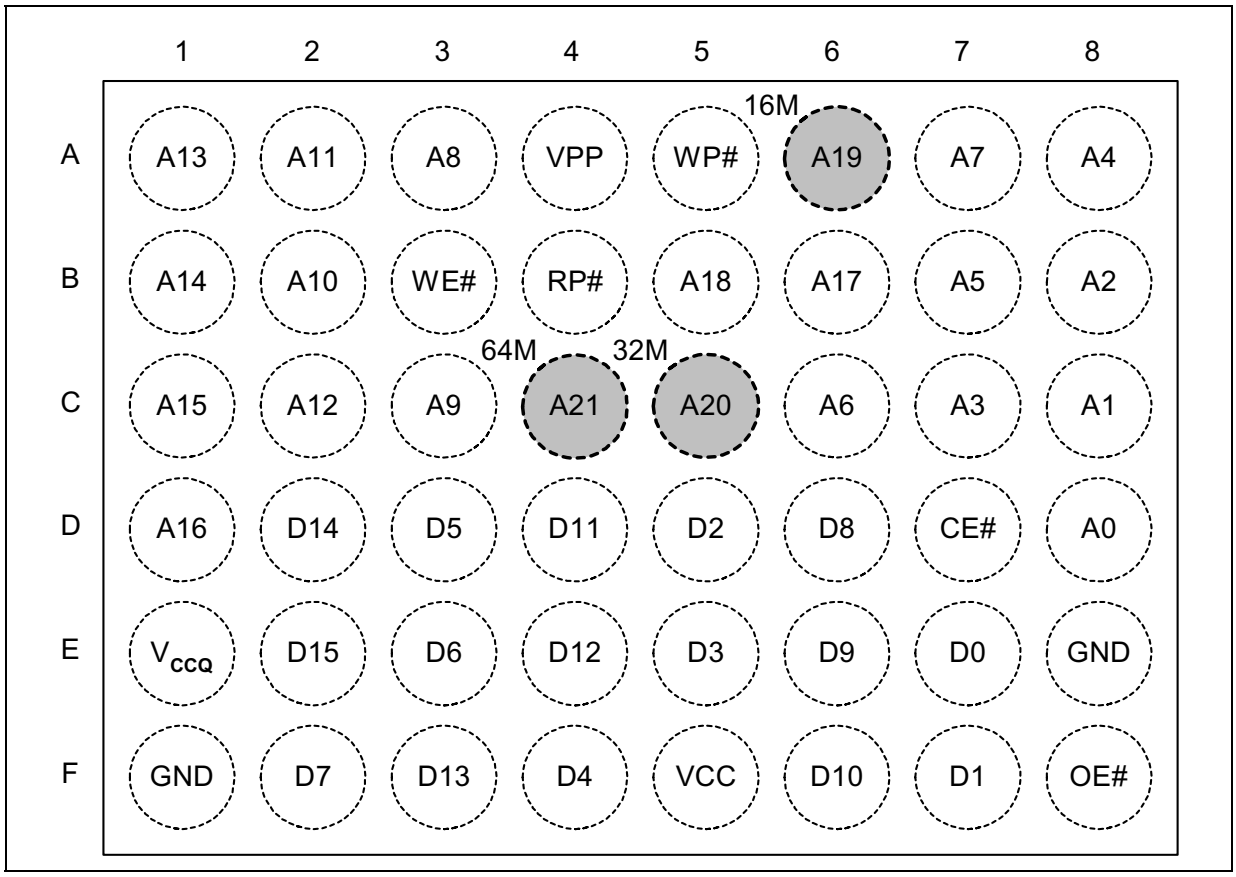

NOTES:
1. Shaded connections indicate the upgrade address connections. Routing is not recommended in this area.
2. A19 denotes 16 Mbit; A20 denotes 32 Mbit; A21 denotes 64 Mbit.
3. Unused address balls are not populated.

Figure 4. 64-Ball Easy BGA Package[1,2]

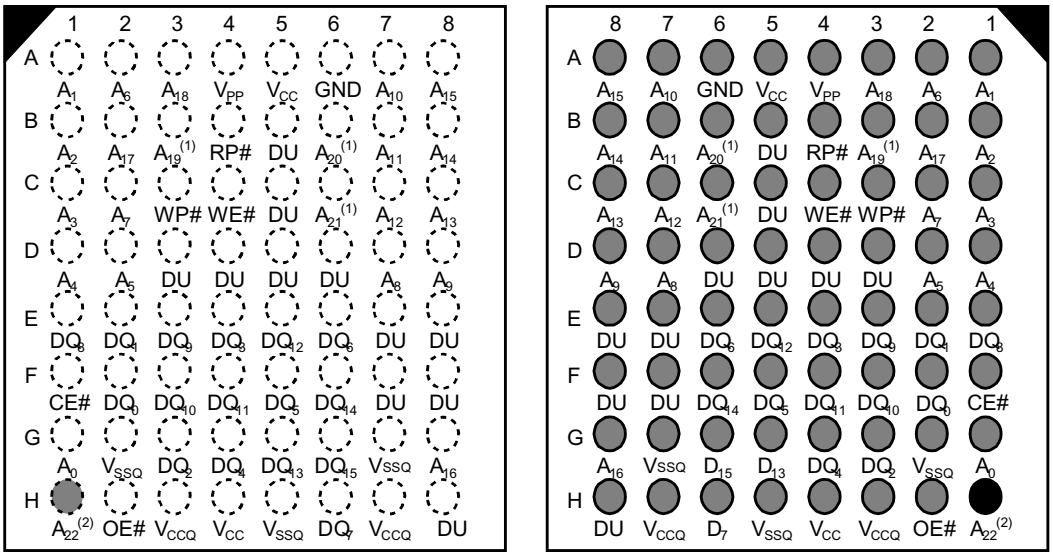

Top View - Ball Side

Bottom View - Ball Side

NOTES:
1. A19 denotes 16 Mbit; A20 denotes 32 Mbit; A21 denotes 64 Mbit.
2. Unused address balls are not populated.

2.3 Signal Descriptions

Table 2 lists the active signals used and provides a brief description of each.

Table 2. Signal Descriptions

Symbol	Type	Name and Function
A[MAX:0]	INPUT	**ADDRESS INPUTS** for memory addresses. Address are internally latched during a program or erase cycle. 8 Mbit: AMAX= A18 16 Mbit: AMAX = A19 32 Mbit: AMAX = A20 64 Mbit: AMAX = A21
DQ[15:0]	INPUT/ OUTPUT	**DATA INPUTS/OUTPUTS:** Inputs data and commands during a write cycle; outputs data during read cycles. Inputs commands to the Command User Interface when CE# and WE# are active. Data is internally latched. The data pins float to tri-state when the chip is de-selected or the outputs are disabled.
CE#	INPUT	**CHIP ENABLE:** Active-low input. Activates the internal control logic, input buffers, decoders and sense amplifiers. CE# is active low. CE# high de-selects the memory device and reduces power consumption to standby levels.
OE#	INPUT	**OUTPUT ENABLE:** Active-low input. Enables the device's outputs through the data buffers during a Read operation.
RP#	INPUT	**RESET/DEEP POWER-DOWN:** Active-low input. When RP# is at logic low, the device is in reset/deep power-down mode, which drives the outputs to High-Z, resets the Write State Machine, and minimizes current levels (I_{CCD}). When RP# is at logic high, the device is in standard operation. When RP# transitions from logic-low to logic-high, the device resets all blocks to locked and defaults to the read array mode.
WE#	INPUT	**WRITE ENABLE:** Active-low input. WE# controls writes to the device. Address and data are latched on the rising edge of the WE# pulse.
WP#	INPUT	**WRITE PROTECT:** Active-low input. When WP# is a logic low, the lock-down mechanism is enabled and blocks marked lock-down cannot be unlocked through software. When WP# is logic high, the lock-down mechanism is disabled and blocks previously locked-down are now locked and can be unlocked and locked through software. After WP# goes low, any blocks previously marked lock-down revert to the lock-down state. See Section 5.0, "Security Modes" on page 27 for details on block locking.
VPP	INPUT/ POWER	**PROGRAM/ERASE POWER SUPPLY:** Operates as an input at logic levels to control complete device protection. Supplies power for accelerated Program and Erase operations in 12 V ± 5% range. This pin cannot be left floating. Lower VPP ≤ VPPLK to protect all contents against Program and Erase commands. Set VPP = VCC for in-system Read, Program and Erase operations. In this configuration, VPP can drop as low as 1.65 V to allow for resistor or diode drop from the system supply. Apply VPP to 12 V ± 5% for faster program and erase in a production environment. Applying 12 V ± 5% to VPP can only be done for a maximum of 1000 cycles on the main blocks and 2500 cycles on the boot blocks. VPP may be connected to 12 V for a total of 80 hours maximum. See Section 5.6 for details on VPP voltage configurations.
VCC	POWER	**DEVICE CORE POWER SUPPLY:** Supplies power for device operations.
VCCQ	POWER	**OUTPUT POWER SUPPLY:** Output-driven source voltage. This ball can be tied directly to V_{CC} if operating within V_{CC} range.
GND	POWER	**GROUND:** For all internal circuitry. All ground inputs must be connected.
DU	-	**DON'T USE:** Do not use this ball. This ball should not be connected to any power supplies, signals or other balls, and must be left floating.
NC	-	**NO CONNECT:** Pin must be left floating.

2.4 Block Diagram

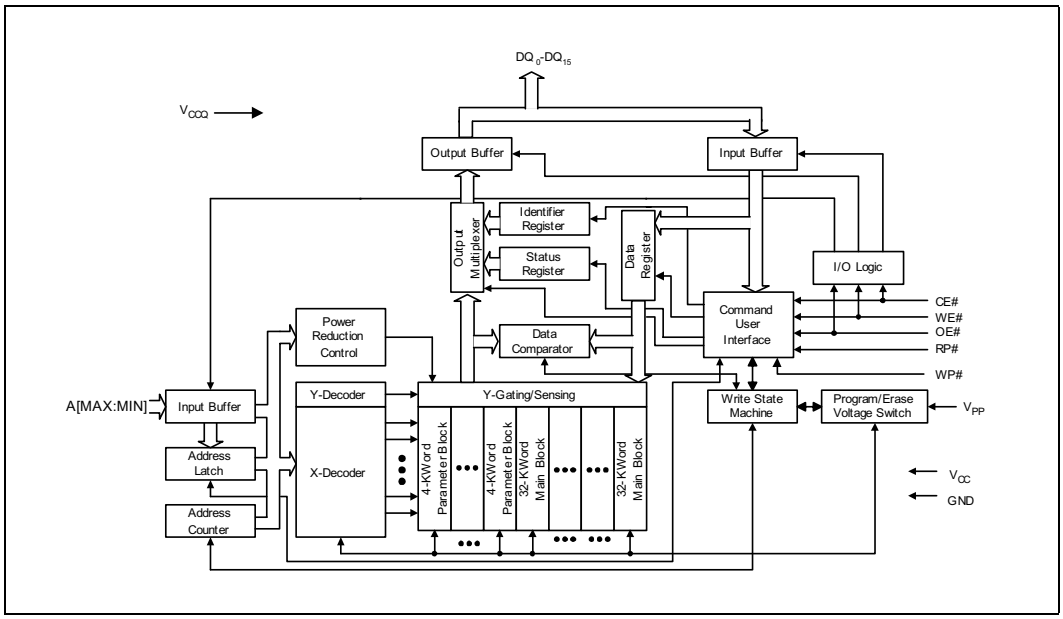

2.5 Memory Map

The C3 device is asymmetrically blocked, which enables system code and data integration within a single flash device. The bulk of the array is divided into 32 Kword main blocks that can store code or data, and 4 Kword boot blocks to facilitate storage of boot code or for frequently changing small parameters. See Table 3, "Top Boot Memory Map" on page 15 and Table 4, "Bottom Boot Memory Map" on page 16 for details.

Table 3. Top Boot Memory Map

Size (KW)	Blk	8-Mbit Memory Addressing (HEX)	Size (KW)	Blk	16-Mbit Memory Addressing (HEX)	Size (KW)	Blk	32-Mbit Memory Addressing (HEX)	Size (KW)	Blk	64-Mbit Memory Addressing (HEX)
4	22	7F000-7FFFF	4	38	FF000-FFFFF	4	70	1FF000-1FFFFF	4	134	3FF000-3FFFFF
4	21	7E000-7EFFF	4	37	FE000-FEFFF	4	69	1FE000-1FEFFF	4	133	3FE000-3FEFFF
4	20	7D000-7DFFF	4	36	FD000-FDFFF	4	68	1FD000-1FDFFF	4	132	3FD000-3FDFFF
4	19	7C000-7CFFF	4	35	FC000-FCFFF	4	67	1FC000-1FCFFF	4	131	3FC000-3FCFFF
4	18	7B000-7BFFF	4	34	FB000-FBFFF	4	66	1FB000-1FBFFF	4	130	3FB000-3FBFFF
4	17	7A000-7AFFF	4	33	FA000-FAFFF	4	65	1FA000-1FAFFF	4	129	3FA000-3FAFFF
4	16	79000-79FFF	4	32	F9000-F9FFF	4	64	1F9000-1F9FFF	4	128	3F9000-3F9FFF
4	15	78000-78FFF	4	31	F8000-F8FFF	4	63	1F8000-1F8FFF	4	127	3F8000-3F8FFF
32	14	70000-77FFF	32	30	F0000-F7FFF	32	62	1F0000-1F7FFF	32	126	3F0000-3F7FFF
32	13	68000-6FFFF	32	29	E8000-EFFFF	32	61	1E8000-1EFFFF	32	125	3E8000-3EFFFF
32	12	60000-67FFF	32	28	E0000-E7FFF	32	60	1E0000-1E7FFF	32	124	3E0000-3E7FFF
32	11	58000-5FFFF	32	27	D8000-DFFFF	32	59	1D8000-1DFFFF	32	123	3D8000-3DFFFF
...	...	...	...	...	...	...	...	...	...	...	...
32	2	10000-17FFF	32	2	10000-17FFF	32	2	10000-17FFF	32	2	10000-17FFF
32	1	8000-0FFFF	32	1	08000-0FFFF	32	1	08000-0FFFF	32	1	08000-0FFFF
32	0	0000-07FFF	32	0	00000-07FFF	32	0	00000-07FFF	32	0	00000-07FFF

Table 4. Bottom Boot Memory Map

Size (KW)	Blk	8-Mbit Memory Addressing (HEX)	Size (KW)	Blk	16-Mbit Memory Addressing (HEX)	Size (KW)	Blk	32-Mbit Memory Addressing (HEX)	Size (KW)	Blk	64-Mbit Memory Addressing (HEX)
32	22	78000-7FFFF	32	38	F8000-FFFFF	32	70	1F8000-1FFFFF	32	134	3F8000-3FFFFF
32	21	70000-77FFF	32	37	F0000-F7FFF	32	69	1F0000-1F7FFF	32	133	3F0000-3F7FFF
32	20	68000-6FFFF	32	36	E8000-EFFFF	32	68	1E8000-1EFFFF	32	132	3E8000-3EFFFF
32	19	60000-67FFF	32	35	E0000-E7FFF	32	67	1E0000-1E7FFF	32	131	3E0000-3E7FFF
...	...	...	...	...	...	...	...	...	.	...	...
32	10	18000-1FFFF	32	10	18000-1FFFF	32	10	18000-1FFFF	32	10	18000-1FFFF
32	9	10000-17FFF	32	9	10000-17FFF	32	9	10000-17FFF	32	9	10000-17FFF
32	8	08000-0FFFF	32	8	08000-0FFFF	32	8	08000-0FFFF	32	8	08000-0FFFF
4	7	07000-07FFF	4	7	07000-07FFF	4	7	07000-07FFF	4	7	07000-07FFF
4	6	06000-06FFF	4	6	06000-06FFF	4	6	06000-06FFF	4	6	06000-06FFF
4	5	05000-05FFF	4	5	05000-05FFF	4	5	05000-05FFF	4	5	05000-05FFF
4	4	04000-04FFF	4	4	04000-04FFF	4	4	04000-04FFF	4	4	04000-04FFF
4	3	03000-03FFF	4	3	03000-03FFF	4	3	03000-03FFF	4	3	03000-03FFF
4	2	02000-02FFF	4	2	02000-02FFF	4	2	02000-02FFF	4	2	02000-02FFF
4	1	01000-01FFF	4	1	01000-01FFF	4	1	01000-01FFF	4	1	01000-01FFF
4	0	00000-00FFF	4	0	00000-00FFF	4	0	00000-00FFF	4	0	00000-00FFF

3.0 Device Operations

The C3 device uses a CUI and automated algorithms to simplify Program and Erase operations. The CUI allows for 100% CMOS-level control inputs and fixed power supplies during erasure and programming.

The internal WSM completely automates Program and Erase operations while the CUI signals the start of an operation and the status register reports device status. The CUI handles the WE# interface to the data and address latches, as well as system status requests during WSM operation.

3.1 Bus Operations

The C3 device performs read, program, and erase operations in-system via the local CPU or microcontroller. Four control pins (CE#, OE#, WE#, and RP#) manage the data flow in and out of the flash device. Table 5 on page 17 summarizes these bus operations.

Table 5. Bus Operations

Mode	RP#	CE#	OE#	WE#	DQ[15:0]
Read	V_{IH}	V_{IL}	V_{IL}	V_{IH}	D_{OUT}
Write	V_{IH}	V_{IL}	V_{IH}	V_{IL}	D_{IN}
Output Disable	V_{IH}	V_{IL}	V_{IH}	V_{IH}	High-Z
Standby	V_{IH}	V_{IH}	X	X	High-Z
Reset	V_{IL}	X	X	X	High-Z

NOTE: X = Don't Care (V_{IL} or V_{IH})

3.1.1 Read

When performing a read cycle, CE# and OE# must be asserted; WE# and RP# must be deasserted. CE# is the device selection control; when active low, it enables the flash memory device. OE# is the data output control; when low, data is output on DQ[15:0]. See Figure 8, "Read Operation Waveform" on page 42.

3.1.2 Write

A write cycle occurs when both CE# and WE# are low; RP# and OE# are high. Commands are issued to the Command User Interface (CUI). The CUI does not occupy an addressable memory location. Address and data are latched on the rising edge of the WE# or CE# pulse, whichever occurs first. See Figure 9, "Write Operations Waveform" on page 47.

3.1.3 Output Disable

With OE# at a logic-high level (V_{IH}), the device outputs are disabled. DQ[15:0] are placed in a high-impedance state.

3.1.4 Standby

Deselecting the device by bringing CE# to a logic-high level (V_{IH}) places the device in standby mode, which substantially reduces device power consumption without any latency for subsequent read accesses. In standby, outputs are placed in a high-impedance state independent of OE#. If deselected during a Program or Erase operation, the device continues to consume active power until the Program or Erase operation is complete.

3.1.5 Reset

From read mode, RP# at V_{IL} for time t_{PLPH} deselects the memory, places output drivers in a high-impedance state, and turns off all internal circuits. After return from reset, a time t_{PHQV} is required until the initial read-access outputs are valid. A delay (t_{PHWL} or t_{PHEL}) is required after return from reset before a write cycle can be initiated. After this wake-up interval, normal operation is restored. The CUI resets to read-array mode, the status register is set to 0x80, and all blocks are locked. See Figure 10, "Reset Operations Waveforms" on page 48.

If RP# is taken low for time t_{PLPH} during a Program or Erase operation, the operation will be aborted and the memory contents at the aborted location (for a program) or block (for an erase) are no longer valid, since the data may be partially erased or written. The abort process goes through the following sequence:

1. When RP# goes low, the device shuts down the operation in progress, a process which takes time t_{PLRH} to complete.

2. After time t_{PLRH}, the part will either reset to read-array mode (if RP# is asserted during t_{PLRH}) or enter reset mode (if RP# is deasserted after t_{PLRH}). See Figure 10, "Reset Operations Waveforms" on page 48.

In both cases, after returning from an aborted operation, the relevant time t_{PHQV} or t_{PHWL}/t_{PHEL} must be observed before a Read or Write operation is initiated, as discussed in the previous paragraph. However, in this case, these delays are referenced to the end of t_{PLRH} rather than when RP# goes high.

As with any automated device, it is important to assert RP# during a system reset. When the system comes out of reset, the processor expects to read from the flash memory. Automated flash memories provide status information when read during program or Block-Erase operations. If a CPU reset occurs with no flash memory reset, proper CPU initialization may not occur because the flash memory may be providing status information instead of array data. Intel® Flash memories allow proper CPU initialization following a system reset through the use of the RP# input. In this application, RP# is controlled by the same RESET# signal that resets the system CPU.

4.0 Modes of Operation

4.1 Read Mode

The flash memory has four read modes (read array, read identifier, read status, and CFI query), and two write modes (program and erase). Three additional modes (erase suspend to program, erase suspend to read, and program suspend to read) are available only during suspended operations. Table 7, "Command Bus Operations" on page 24 and Table 8, "Command Codes and Descriptions" on page 25 summarize the commands used to reach these modes. Appendix A, "Write State Machine States" on page 50 is a comprehensive chart showing the state transitions.

4.1.1 Read Array

When RP# transitions from V_{IL} (reset) to V_{IH}, the device defaults to read-array mode and will respond to the read-control inputs (CE#, address inputs, and OE#) without any additional CUI commands.

When the device is in read array mode, four control signals control data output.

- WE# must be logic high (V_{IH})
- CE# must be logic low (V_{IL})
- OE# must be logic low (V_{IL})
- RP# must be logic high (V_{IH})

In addition, the address of the desired location must be applied to the address pins. If the device is not in read-array mode, as would be the case after a Program or Erase operation, the Read Array command (0xFF) must be issued to the CUI before array reads can occur.

4.1.2 Read Identifier

The read-identifier mode outputs three types of information: the manufacturer/device identifier, the block locking status, and the protection register. The device is switched to this mode by issuing the Read Identifier command (0x90). Once in this mode, read cycles from addresses shown in Table 6 retrieve the specified information. To return to read-array mode, issue the Read Array command (0xFF).

Table 6. Device Identification Codes

Item	Address[1]		Data	Description
	Base	Offset		
Manufacturer ID	Block	0x00	0x0089	
Device ID	Block	0x01	0x88C0	8-Mbit Top Boot Device
			0x88C1	8-Mbit Bottom Boot Device
			0x88C2	16-Mbit Top Boot Device
			0x88C3	16-Mbit Bottom Boot Device
			0x88C4	32-Mbit Top Boot Device
			0x88C5	32-Mbit Bottom Boot Device
			0x88CC	64-Mbit Top Boot Device
			0x88CD	64-Mbit Bottom Boot Device
Block Lock Status[2]	Block	0x02	DQ0 = 0b0	Block is unlocked
			DQ0 = 0b1	Block is locked
Block Lock-Down Status[2]	Block	0x02	DQ1 = 0b0	Block is not locked-down
			DQ1 = 0b1	Block is locked down
Protection Register Lock Status	Block	0x80	Lock Data	
Protection Register	Block	0x81 - 0x88	Register Data	Multiple reads required to read the entire 128-bit Protection Register.

NOTES:
1. The address is constructed from a base address plus an offset. For example, to read the Block Lock Status for block number 38 in a bottom boot device, set the address to 0x0F8000 plus the *offset* (0x02), i.e. 0x0F8002. Then examine DQ0 of the data to determine if the block is locked.
2. See Section 5.2, "Reading Block-Lock Status" on page 28 for valid lock status.

4.1.3 CFI Query

The CFI query mode outputs Common Flash Interface (CFI) data after issuing the Read Query Command (0x98). The CFI data structure contains information such as block size, density, command set, and electrical specifications. Once in this mode, read cycles from addresses shown in Appendix C, "Common Flash Interface," retrieve the specified information. To return to read-array mode, issue the Read Array command (0xFF).

4.1.4 Read Status Register

The status register indicates the status of device operations, and the success/failure of that operation. The Read Status Register (0x70) command causes subsequent reads to output data from the status register until another command is issued. To return to reading from the array, issue a Read Array (0xFF) command.

The status-register bits are output on DQ[7:0]. The upper byte, DQ[15:8], outputs 0x00 when a Read Status Register command is issued.

The contents of the status register are latched on the falling edge of OE# or CE# (whichever occurs last) which prevents possible bus errors that might occur if Status Register contents change while being read. CE# or OE# must be toggled with each subsequent status read, or the Status Register will not indicate completion of a Program or Erase operation.

When the WSM is active, SR[7] will indicate the status of the WSM; the remaining bits in the status register indicate whether the WSM was successful in performing the preferred operation (see Table 9, "Status Register Bit Definition" on page 26).

4.1.4.1 Clear Status Register

The WSM can set Status Register bits 1 through 7 and can clear bits 2, 6, and 7; but, the WSM cannot clear Status Register bits 1, 3, 4 or 5. Because bits 1, 3, 4, and 5 indicate various error conditions, these bits can be cleared only through the Clear Status Register (0x50) command. By allowing the system software to control the resetting of these bits, several operations may be performed (such as cumulatively programming several addresses or erasing multiple blocks in sequence) before reading the status register to determine if an error occurred during that series. Clear the status register before beginning another command or sequence. The Read Array command must be issued before data can be read from the memory array. Resetting the device also clears the Status Register.

4.2 Program Mode

Programming is executed using a two-write cycle sequence. The Program Setup command (0x40) is issued to the CUI followed by a second write which specifies the address and data to be programmed. The WSM will execute a sequence of internally timed events to program preferred bits of the addressed location, then verify the bits are sufficiently programmed. Programming the memory results in specific bits within an address location being changed to a "0." If users attempt to program "1"s, the memory cell contents do not change and no error occurs.

The Status Register indicates programming status. While the program sequence executes, status bit 7 is "0." The status register can be polled by toggling either CE# or OE#. While programming, the only valid commands are Read Status Register, Program Suspend, and Program Resume.

When programming is complete, the program-status bits should be checked. If the programming operation was unsuccessful, bit SR[4] of the Status Register is set to indicate a program failure. If SR[3] is set, then V_{PP} was not within acceptable limits, and the WSM did not execute the program command. If SR[1] is set, a program operation was attempted on a locked block and the operation was aborted.

The status register should be cleared before attempting the next operation. Any CUI instruction can follow after programming is completed; however, to prevent inadvertent status-register reads, be sure to reset the CUI to read-array mode.

4.2.1 12-Volt Production Programming

When V_{PP} is between 1.65 V and 3.6 V, all program and erase current is drawn through the VCC pin. Note that if V_{PP} is driven by a logic signal, V_{IH} min = 1.65 V. That is, V_{PP} must remain above 1.65 V to perform in-system flash modifications. When V_{PP} is connected to a 12 V power supply, the device draws program and erase current directly from the VPP pin. This eliminates the need for an external switching transistor to control V_{PP}. Figure 7 on page 31 shows examples of how the flash power supplies can be configured for various usage models.

The 12 V V_{PP} mode enhances programming performance during the short period of time typically found in manufacturing processes; however, it is not intended for extended use. 12 V may be applied to VPP during Program and Erase operations for a maximum of 1000 cycles on the main blocks and 2500 cycles on the parameter blocks. VPP may be connected to 12 V for a total of 80 hours maximum. Stressing the device beyond these limits may cause permanent damage.

4.2.2 Suspending and Resuming Program

The Program Suspend command halts an in-progress program operation so that data can be read from other locations of memory. Once the programming process starts, issuing the Program Suspend command to the CUI requests that the WSM suspend the program sequence at predetermined points in the program algorithm. The device continues to output status-register data after the Program Suspend command is issued. Polling status-register bits SR[7] and SR[2] will determine when the program operation has been suspended (both will be set to "1"). t_{WHRH1}/ t_{EHRH1} specify the program-suspend latency.

A Read-Array command can now be issued to the CUI to read data from blocks other than that which is suspended. The only other valid commands while program is suspended are Read Status Register, Read Identifier, CFI Query, and Program Resume.

After the Program Resume command is issued to the flash memory, the WSM will continue with the programming process and status register bits SR[2] and SR[7] will automatically be cleared. The device automatically outputs status register data when read (see Figure 14, "Program Suspend / Resume Flowchart" on page 53) after the Program Resume command is issued. V_{PP} must remain at the same V_{PP} level used for program while in program-suspend mode. RP# must also remain at V_{IH}.

4.3 Erase Mode

To erase a block, issue the Erase Set-up and Erase Confirm commands to the CUI, along with an address identifying the block to be erased. This address is latched internally when the Erase Confirm command is issued. Block erasure results in all bits within the block being set to "1." Only one block can be erased at a time. The WSM will execute a sequence of internally timed events to program all bits within the block to "0," erase all bits within the block to "1," then verify that all bits within the block are sufficiently erased. While the erase executes, status bit 7 is a "0."

When the status register indicates that erasure is complete, check the erase-status bit to verify that the Erase operation was successful. If the Erase operation was unsuccessful, SR[5] of the status register will be set to a "1," indicating an erase failure. If V_{PP} was not within acceptable limits after the Erase Confirm command was issued, the WSM will not execute the erase sequence; instead, SR[5] of the status register is set to indicate an erase error, and SR[3] is set to a "1" to identify that V_{PP} supply voltage was not within acceptable limits.

After an Erase operation, clear the status register (0x50) before attempting the next operation. Any CUI instruction can follow after erasure is completed; however, to prevent inadvertent status-register reads, it is advisable to place the flash in read-array mode after the erase is complete.

4.3.1 Suspending and Resuming Erase

Since an Erase operation requires on the order of seconds to complete, an Erase Suspend command is provided to allow erase-sequence interruption in order to read data from—or program data to—another block in memory. Once the erase sequence is started, issuing the Erase Suspend command to the CUI suspends the erase sequence at a predetermined point in the erase algorithm. The status register will indicate if/when the Erase operation has been suspended. Erase-suspend latency is specified by t_{WHRH2}/t_{EHRH2}.

A Read Array or Program command can now be issued to the CUI to read/program data from/to blocks other than that which is suspended. This nested Program command can subsequently be suspended to read yet another location. The only valid commands while Erase is suspended are Read Status Register, Read Identifier, CFI Query, Program Setup, Program Resume, Erase Resume, Lock Block, Unlock Block, and Lock-Down Block. During erase-suspend mode, the chip can be placed in a pseudo-standby mode by taking CE# to V_{IH}, which reduces active current consumption.

Erase Resume continues the erase sequence when CE# = V_{IL}. Similar to the end of a standard Erase operation, the status register should be read and cleared before the next instruction is issued.

Table 7. Command Bus Operations

Command	Notes	First Bus Cycle			Second Bus Cycle		
		Oper	Addr	Data	Oper	Addr	Data
Read Array	1,3	Write	X	0xFF			
Read Identifier	1,3	Write	X	0x90	Read	IA	ID
CFI Query	1,3	Write	X	0x98	Read	QA	QD
Read Status Register	1,3	Write	X	0x70	Read	X	SRD
Clear Status Register	1,3	Write	X	0x50			
Program	2,3	Write	X	0x40/ 0x10	Write	PA	PD
Block Erase/Confirm	1,3	Write	X	0x20	Write	BA	D0H
Program/Erase Suspend	1,3	Write	X	0xB0			
Program/Erase Resume	1,3	Write	X	0xD0			
Lock Block	1,3	Write	X	0x60	Write	BA	0x01
Unlock Block	1,3	Write	X	0x60	Write	BA	0xD0
Lock-Down Block	1,3	Write	X	0x60	Write	BA	0x2F
Protection Program	1,3	Write	X	0xC0	Write	PA	PD

X = "Don't Care"	PA = Prog Addr	BA = Block Addr	IA = Identifier Addr.	QA = Query Addr.
SRD = Status Reg. Data	PD = Prog Data		ID = Identifier Data	QD = Query Data

NOTES:
1. Following the Read Identifier or CFI Query commands, read operations output device identification data or CFI query information, respectively. See Section 4.1.2 and Section 4.1.3.
2. Either 0x40 or 0x10 command is valid, but the Intel standard is 0x40.
3. When writing commands, the upper data bus [DQ8-DQ15] should be either V_{IL} or V_{IH}, to minimize current draw.

Bus operations are defined in Table 5, "Bus Operations" on page 17.

Table 8. Command Codes and Descriptions

Code (HEX)	Device Mode	Command Description
FF	Read Array	This command places the device in read-array mode, which outputs array data on the data pins.
40	Program Set-Up	This is a two-cycle command. The first cycle prepares the CUI for a program operation. The second cycle latches addresses and data information and initiates the WSM to execute the Program algorithm. The flash outputs status-register data when CE# or OE# is toggled. A Read Array command is required after programming to read array data. See Section 4.2, "Program Mode" on page 21.
20	Erase Set-Up	This is a two-cycle command. Prepares the CUI for the Erase Confirm command. If the next command is not an Erase Confirm command, then the CUI will (a) set both SR.4 and SR.5 of the status register to a "1," (b) place the device into the read-status-register mode, and (c) wait for another command. See Section 4.3, "Erase Mode" on page 22.
D0	Erase Confirm Program/Erase Resume Unlock Block	If the previous command was an Erase Set-Up command, then the CUI will close the address and data latches and begin erasing the block indicated on the address pins. During program/erase, the device will respond only to the Read Status Register, Program Suspend and Erase Suspend commands, and will output status-register data when CE# or OE# is toggled. If a Program or Erase operation was previously suspended, this command will resume that operation. If the previous command was Block Unlock Set-Up, the CUI will latch the address and unlock the block indicated on the address pins. If the block had been previously set to Lock-Down, this operation will have no effect. (See Section 5.1)
B0	Program Suspend Erase Suspend	Issuing this command will begin to suspend the currently executing Program/Erase operation. The status register will indicate when the operation has been successfully suspended by setting either the program-suspend SR[2] or erase-suspend SR[6] and the WSM status bit SR[7] to a "1" (ready). The WSM will continue to idle in the SUSPEND state, regardless of the state of all input-control pins except RP#, which will immediately shut down the WSM and the remainder of the chip if RP# is driven to V_{IL}. See Sections 3.2.5.1 and 3.2.6.1.
70	Read Status Register	This command places the device into read-status-register mode. Reading the device will output the contents of the status register, regardless of the address presented to the device. The device automatically enters this mode after a Program or Erase operation has been initiated. See Section 4.1.4, "Read Status Register" on page 20.
50	Clear Status Register	The WSM can set the block-lock status SR[1], V_{PP} Status SR[3], program status SR[4], and erase-status SR[5] bits in the status register to "1," but it cannot clear them to "0." Issuing this command clears those bits to "0."
90	Read Identifier	Puts the device into the read-identifier mode so that reading the device will output the manufacturer/device codes or block-lock status. See Section 4.1.2, "Read Identifier" on page 19.
60	Block Lock, Block Unlock, Block Lock-Down Set-Up	Prepares the CUI for block-locking changes. If the next command is not Block Unlock, Block Lock, or Block Lock-Down, then the CUI will set both the program and erase-status-register bits to indicate a command-sequence error. See Section 5.0, "Security Modes" on page 27.
01	Lock-Block	If the previous command was Lock Set-Up, the CUI will latch the address and lock the block indicated on the address pins. (See Section 5.1)
2F	Lock-Down	If the previous command was a Lock-Down Set-Up command, the CUI will latch the address and lock-down the block indicated on the address pins. (See Section 5.1)
98	CFI Query	Puts the device into the CFI-Query mode so that reading the device will output Common Flash Interface information. See Section 4.1.3 and Appendix C, "Common Flash Interface".
C0	Protection Program Set-Up	This is a two-cycle command. The first cycle prepares the CUI for a program operation to the protection register. The second cycle latches addresses and data information and initiates the WSM to execute the Protection Program algorithm to the protection register. The flash outputs status-register data when CE# or OE# is toggled. A Read Array command is required after programming to read array data. See Section 5.5.

Table 8. Command Codes and Descriptions

Code (HEX)	Device Mode	Command Description
10	Alt. Prog Set-Up	Operates the same as Program Set-up command. (See 0x40/Program Set-Up)
00	Invalid/ Reserved	Unassigned commands should not be used. Intel reserves the right to redefine these codes for future functions.

NOTE: See Appendix A, "Write State Machine States" for mode transition information.

Table 9. Status Register Bit Definition

WSMS	ESS	ES	PS	VPPS	PSS	BLS	R
7	6	5	4	3	2	1	0

	NOTES:
SR[7] WRITE STATE MACHINE STATUS (WSMS) 1 = Ready 0 = Busy	Check Write State Machine bit first to determine Word Program or Block Erase completion, before checking program or erase-status bits.
SR[6] = ERASE-SUSPEND STATUS (ESS) 1 = Erase Suspended 0 = Erase In Progress/Completed	When Erase Suspend is issued, WSM halts execution and sets both WSMS and ESS bits to "1." ESS bit remains set to "1" until an Erase Resume command is issued.
SR[5] = ERASE STATUS (ES) 1 = Error In Block Erase 0 = Successful Block Erase	When this bit is set to "1," WSM has applied the max. number of erase pulses to the block and is still unable to verify successful block erasure.
SR[4] = PROGRAM STATUS (PS) 1 = Error in Programming 0 = Successful Programming	When this bit is set to "1," WSM has attempted but failed to program a word/byte.
SR[3] = V_{PP} STATUS (VPPS) 1 = V_{PP} Low Detect, Operation Abort 0 = V_{PP} OK	The V_{PP} status bit does not provide continuous indication of V_{PP} level. The WSM interrogates V_{PP} level only after the Program or Erase command sequences have been entered, and informs the system if V_{PP} has not been switched on. The V_{PP} is also checked before the operation is verified by the WSM. The V_{PP} status bit is not guaranteed to report accurate feedback between V_{PPLK} and V_{PP1}Min.
SR[2] = PROGRAM SUSPEND STATUS (PSS) 1 = Program Suspended 0 = Program in Progress/Completed	When Program Suspend is issued, WSM halts execution and sets both WSMS and PSS bits to "1." PSS bit remains set to "1" until a Program Resume command is issued.
SR[1] = BLOCK LOCK STATUS 1 = Prog/Erase attempted on a locked block; Operation aborted. 0 = No operation to locked blocks	If a Program or Erase operation is attempted to one of the locked blocks, this bit is set by the WSM. The operation specified is aborted and the device is returned to read status mode.
SR[0] = RESERVED FOR FUTURE ENHANCEMENTS (R)	This bit is reserved for future use and should be masked out when polling the status register.

NOTE: A Command-Sequence Error is indicated when SR[4], SR[5], and SR[7] are set.

5.0 Security Modes

5.1 Flexible Block Locking

The C3 device offers an instant, individual block-locking scheme that allows any block to be locked or unlocked with no latency, enabling instant code and data protection.

This locking scheme offers two levels of protection. The first level allows software-only control of block locking (useful for data blocks that change frequently), while the second level requires hardware interaction before locking can be changed (useful for code blocks that change infrequently).

The following sections will discuss the operation of the locking system. The term "state [abc]" will be used to specify locking states; e.g., "state [001]," where a = value of WP#, b = bit D1 of the Block Lock status register, and c = bit D0 of the Block Lock status register. Figure 5, "Block Locking State Diagram" on page 27 displays all of the possible locking states.

Figure 5. Block Locking State Diagram

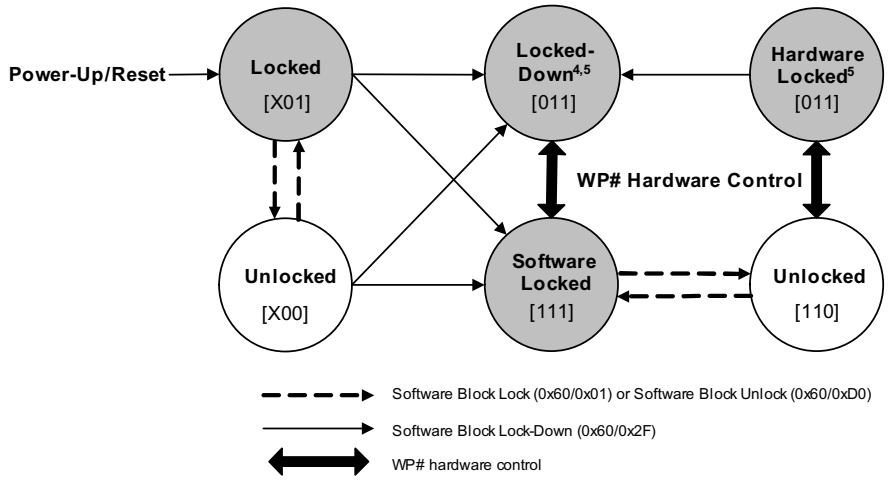

Notes:
1. [a,b,c] represents [WP#, D1, D0]. X = Don't Care.
2. D1 indicates block Lock-down status. D1 = '0', Lock-down has not been issued to this block. D1 = '1', Lock-down has been issued to this block.
3. D0 indicates block lock status. D0 = '0', block is unlocked. D0 = '1', block is locked.
4. Locked-down = Hardware + Software locked.
5. [011] states should be tracked by system software to determine difference between Hardware Locked and Locked-Down states.

5.1.1 Locking Operation

The locking status of each block can be set to Locked, Unlocked, or Lock-Down, each of which will be described in the following sections. See Figure 5, "Block Locking State Diagram" on page 27 and Figure 17, "Locking Operations Flowchart" on page 56.

The following concisely summarizes the locking functionality.

5.1.1.1 Locked State

The default state of all blocks upon power-up or reset is locked (states [001] or [101]). Locked blocks are fully protected from alteration. Any Program or Erase operations attempted on a locked block will return an error on bit SR[1] of the Status Register. The state of a locked block can be changed to Unlocked or Lock Down using the appropriate software commands. An Unlocked block can be locked by writing the Lock command sequence, 0x60 followed by 0x01.

5.1.1.2 Unlocked State

Unlocked blocks (states [000], [100], [110]) can be programmed or erased. All unlocked blocks return to the Locked state when the device is reset or powered down. The status of an unlocked block can be changed to Locked or Locked Down using the appropriate software commands. A Locked block can be unlocked by writing the Unlock command sequence, 0x60 followed by 0xD0.

5.1.1.3 Lock-Down State

Blocks that are Locked-Down (state [011]) are protected from Program and Erase operations (just like Locked blocks), but their protection status cannot be changed using software commands alone. A Locked or Unlocked block can be Locked Down by writing the Lock-Down command sequence, 0x60 followed by 0x2F. Locked-Down blocks revert to the Locked state when the device is reset or powered down.

The Lock-Down function depends on the WP# input pin. When WP# = 0, blocks in Lock Down [011] are protected from program, erase, and lock status changes. When WP# = 1, the Lock-Down function is disabled ([111]) and Locked-Down blocks can be individually unlocked by software command to the [110] state, where they can be erased and programmed. These blocks can then be relocked [111] and unlocked [110] as required while WP# remains high. When WP# goes low, blocks that were previously Locked Down return to the Lock-Down state [011], regardless of any changes made while WP# was high. Device reset or power-down resets all blocks, including those in Lock-Down, to Locked state.

5.2 Reading Block-Lock Status

The Lock status of each block can be read in read-identifier mode of the device by issuing the read-identifier command (0x90). Subsequent reads at Block Address + 0x00002 will output the Lock status of that block. The Lock status is represented by DQ0 and DQ1. DQ0 indicates the Block Lock/Unlock status and is set by the Lock command and cleared by the Unlock command. It is also automatically set when entering Lock Down. DQ1 indicates Lock-Down status, and is set by the Lock-Down command. It cannot be cleared by software—only by device reset or power-down. See Table 6, "Device Identification Codes" on page 20 for block-status information.

5.3 Locking Operations during Erase Suspend

Changes to block-lock status can be performed during an erase-suspend by using the standard locking command sequences to Unlock, Lock, or Lock Down a block. This is useful in the case when another block needs to be updated while an Erase operation is in progress.

To change block locking during an Erase operation, first issue the Erase Suspend command (0xB0), then check the status register until it indicates that the Erase operation has been suspended. Next, write the preferred Lock command sequence to a block and the Lock status will be changed. After completing any preferred Lock, Read, or Program operations, resume the Erase operation with the Erase Resume command (0xD0).

If a block is Locked or Locked Down during a Suspended Erase of the same block, the locking status bits will be changed immediately. But when the Erase is resumed, the Erase operation will complete.

Locking operations cannot be performed during a Program Suspend. Refer to Appendix A, "Write State Machine States" on page 50 for detailed information on which commands are valid during Erase Suspend.

5.4 Status Register Error Checking

Using nested-locking or program-command sequences during Erase Suspend can introduce ambiguity into status register results.

Since locking changes are performed using a two-cycle command sequence, e.g., 0x60 followed by 0x01 to lock a block, following the Block Lock, Block Unlock, or Block Lock-Down Setup command (0x60) with an invalid command will produce a Lock-Command error (SR[4] and SR[5] will be set to 1) in the Status Register. If a Lock-Command error occurs during an Erase Suspend, SR[4] and SR[5] will be set to 1 and will remain at 1 after the Erase is resumed. When Erase is complete, any possible error during the Erase cannot be detected via the status register because of the previous Lock-Command error.

A similar situation happens if an error occurs during a Program-Operation error nested within an Erase Suspend.

5.5 128-Bit Protection Register

The C3 device architecture includes a 128-bit protection register than can be used to increase the security of a system design. For example, the number contained in the protection register can be used to "match" the flash component with other system components, such as the CPU or ASIC, preventing device substitution. The Intel application note, *AP-657 Designing with the Advanced+ Boot Block Flash Memory Architecture,* contains additional application information.

The 128 bits of the protection register are divided into two 64-bit segments. One of the segments is programmed at the Intel factory with a unique 64-bit number, which is unchangeable. The other segment is left blank for customer designs to program, as preferred. Once the customer segment is programmed, it can be locked to prevent further programming.

5.5.1 Reading the Protection Register

The protection register is read in the read-identifier mode. The device is switched to this mode by issuing the Read Identifier command (0x90). Once in this mode, read cycles from addresses shown in Figure 6, "Protection Register Mapping" retrieve the specified information. To return to read-array mode, issue the Read Array command (0xFF).

5.5.2 Programming the Protection Register

The protection register bits are programmed using the two-cycle Protection Program command. The 64-bit number is programmed 16 bits at a time. First, issue the Protection Program Setup command, 0xC0. The next write to the device will latch in address and data, and program the specified location. The allowable addresses are shown in Table 6, "Device Identification Codes" on page 20. See Figure 18, "Protection Register Programming Flowchart" on page 57. Attempts to address Protection Program commands outside the defined protection register address space should not be attempted. Attempting to program to a previously locked protection register segment will result in a Status Register error (Program Error bit SR[4] and Lock Error bit SR[1] will be set to 1).

5.5.3 Locking the Protection Register

The user-programmable segment of the protection register is lockable by programming bit 1 of the PR-LOCK location to 0. See Figure 6, "Protection Register Mapping" on page 30. Bit 0 of this location is programmed to 0 at the Intel factory to protect the unique device number. This bit is set using the Protection Program command to program 0xFFFD to the PR-LOCK location. After these bits have been programmed, no further changes can be made to the values stored in the protection register. Protection Program commands to a locked section will result in a Status Register error (Program Error bit SR[4] and Lock Error bit SR[1] will be set to 1). Protection register lockout state is not reversible.

Figure 6. Protection Register Mapping

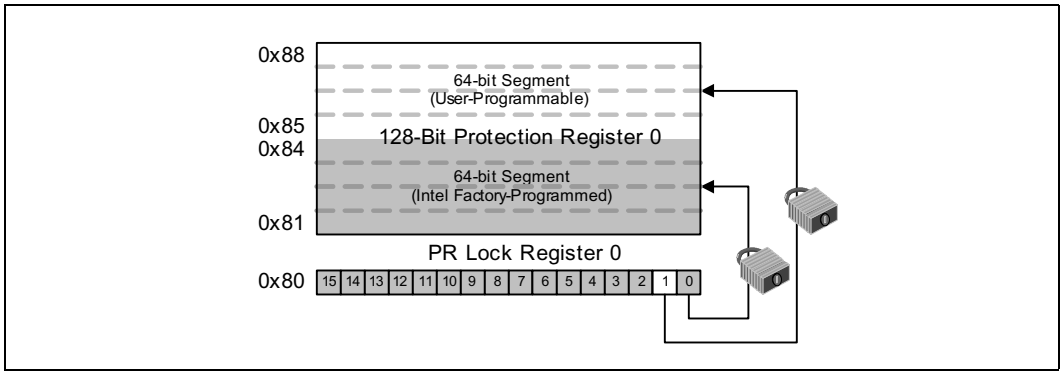

5.6 V_{PP} Program and Erase Voltages

The C3 device provides in-system programming and erase in the 1.65 V–3.6 V range. For fast production programming, 12 V programming can be used. Refer to Figure 7, "Example Power Supply Configurations" on page 31.

5.6.1 Program Protection

In addition to the flexible block locking, the V_{PP} programming voltage can be held low for absolute hardware write protection of all blocks in the flash device. When V_{PP} is below or equal to V_{PPLK}, any Program or Erase operation will result in an error, prompting the corresponding status-register bit (SR[3]) to be set.

Figure 7. Example Power Supply Configurations

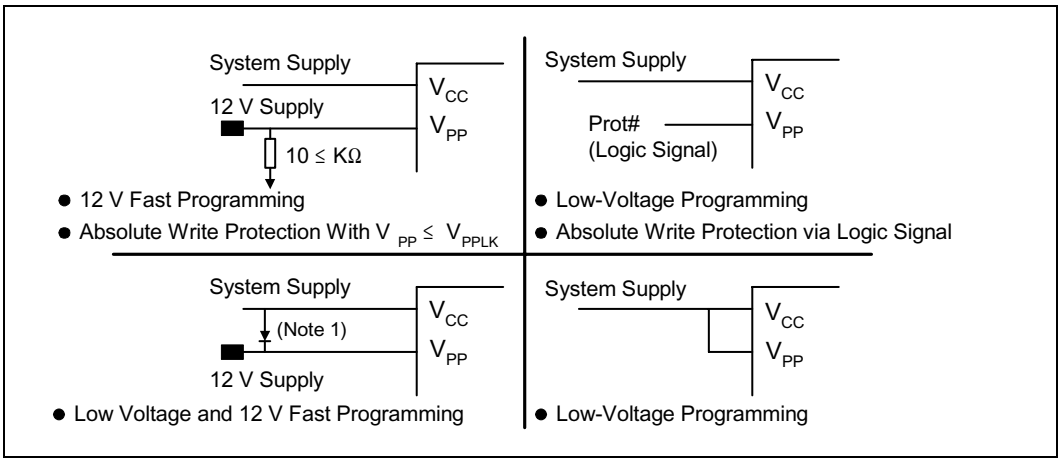

0645_06

NOTE:
1. A resistor can be used if the V_{CC} supply can sink adequate current based on resistor value. See *AP-657 Designing with the Advanced+ Boot Block Flash Memory Architecture* for details.

6.0 Power Consumption

Intel Flash devices have a tiered approach to power savings that can significantly reduce overall system power consumption. The Automatic Power Savings (APS) feature reduces power consumption when the device is selected but idle. If CE# is deasserted, the flash enters its standby mode, where current consumption is even lower. If RP# is deasserted, the flash enter deep power-down mode for ultra-low current consumption. The combination of these features can minimize memory power consumption, and therefore, overall system power consumption.

6.1 Active Power (Program/Erase/Read)

With CE# at a logic-low level and RP# at a logic-high level, the device is in the active mode. Refer to the DC Characteristic tables for I_{CC} current values. Active power is the largest contributor to overall system power consumption. Minimizing the active current could have a profound effect on system power consumption, especially for battery-operated devices.

6.2 Automatic Power Savings (APS)

Automatic Power Savings provides low-power operation during read mode. After data is read from the memory array and the address lines are idle, APS circuitry places the device in a mode where typical current is comparable to I_{CCS}. The flash stays in this static state with outputs valid until a new location is read.

6.3 Standby Power

When CE# is at a logic-high level (V_{IH}), the flash memory is in standby mode, which disables much of the device's circuitry and substantially reduces power consumption. Outputs are placed in a high-impedance state independent of the status of the OE# signal. If CE# transitions to a logic-high level during Erase or Program operations, the device will continue to perform the operation and consume corresponding active power until the operation is completed.

System engineers should analyze the breakdown of standby time versus active time, and quantify the respective power consumption in each mode for their specific application. This approach will provide a more accurate measure of application-specific power and energy requirements.

6.4 Deep Power-Down Mode

The deep power-down mode is activated when RP# = V_{IL}. During read modes, RP# going low de-selects the memory and places the outputs in a high-impedance state. Recovery from deep power-down requires a minimum time of t_{PHQV} for Read operations, and t_{PHWL}/t_{PHEL} for Write operations.

During program or erase modes, RP# transitioning low will abort the in-progress operation. The memory contents of the address being programmed or the block being erased are no longer valid as the data integrity has been compromised by the abort. During deep power-down, all internal circuits are switched to a low-power savings mode (RP# transitioning to V_{IL} or turning off power to the device clears the status register).

6.5 Power and Reset Considerations

6.5.1 Power-Up/Down Characteristics

In order to prevent any condition that may result in a spurious write or erase operation, it is recommended to power-up VCC and VCCQ together. Conversely, VCC and VCCQ must power-down together.

It is also recommended to power-up VPP with or after VCC has reached VCC_{min}. Conversely, VPP must powerdown with or slightly before VCC.

If VCCQ and/or VPP are not connected to the VCC supply, then VCC should attain VCC_{min} before applying VCCQ and VPP. Device inputs should not be driven before supply voltage reaches VCC_{min}.

Power supply transitions should only occur when RP# is low.

6.5.2 RP# Connected to System Reset

The use of RP# during system reset is important with automated program/erase devices since the system expects to read from the flash memory when it comes out of reset. If a CPU reset occurs without a flash memory reset, proper CPU initialization will not occur because the flash memory may be providing status information instead of array data. Intel recommends connecting RP# to the system CPU RESET# signal to allow proper CPU/flash initialization following system reset.

System designers must guard against spurious writes when V_{CC} voltages are above V_{LKO}. Because both WE# and CE# must be low for a command write, driving either signal to V_{IH} will inhibit writes to the device. The CUI architecture provides additional protection since alteration of memory contents can only occur after successful completion of the two-step command sequences. The device is also disabled until RP# is brought to V_{IH}, regardless of the state of its control inputs. By holding the device in reset during power-up/down, invalid bus conditions during power-up can be masked, providing yet another level of memory protection.

6.5.3 V_{CC}, V_{PP} and RP# Transitions

The CUI latches commands as issued by system software and is not altered by V_{PP} or CE# transitions or WSM actions. Its default state upon power-up, after exit from reset mode or after V_{CC} transitions above V_{LKO} (Lockout voltage), is read-array mode.

After any program or Block-Erase operation is complete (even after V_{PP} transitions down to V_{PPLK}), the CUI must be reset to read-array mode via the Read Array command if access to the flash-memory array is desired.

6.6 Power Supply Decoupling

Flash memory power-switching characteristics require careful device decoupling. System designers should consider the following three supply current issues:

- Standby current levels (I_{CCS})
- Read current levels (I_{CCR})
- Transient peaks produced by falling and rising edges of CE#.

Transient current magnitudes depend on the device outputs' capacitive and inductive loading. Two-line control and proper decoupling capacitor selection will suppress these transient voltage peaks. Each flash device should have a 0.1 µF ceramic capacitor connected between each V_{CC} and GND, and between its V_{PP} and VSS. These high- frequency, inherently low-inductance capacitors should be placed as close as possible to the package leads.

7.0 Thermal and DC Characteristics

7.1 Absolute Maximum Ratings

Warning: Stressing the device beyond the "Absolute Maximum Ratings" may cause permanent damage. These are stress ratings only. Operation beyond the "Operating Conditions" is not recommended, and extended exposure beyond the "Operating Conditions" may affect device reliability.

NOTICE: Specifications are subject to change without notice. Verify with your local Intel Sales office that you have the latest datasheet before finalizing a design.

Parameter	Maximum Rating	Notes
Extended Operating Temperature		
During Read	–40 °C to +85 °C	
During Block Erase and Program	–40 °C to +85 °C	
Temperature under Bias	–40 °C to +85 °C	
Storage Temperature	–65 °C to +125 °C	
Voltage On Any Pin (except V_{CC} and V_{PP}) with Respect to GND	–0.5 V to +3.7 V	1
V_{PP} Voltage (for Block Erase and Program) with Respect to GND	–0.5 V to +13.5 V	1,2,3
V_{CC} and V_{CCQ} Supply Voltage with Respect to GND	–0.2 V to +3.6 V	
Output Short Circuit Current	100 mA	4

NOTES:
1. Minimum DC voltage is –0.5 V on input/output pins. During transitions, this level may undershoot to –2.0 V for periods <20 ns. Maximum DC voltage on input/output pins is V_{CC} +0.5 V which, during transitions, may overshoot to V_{CC} +2.0 V for periods <20 ns.
2. Maximum DC voltage on V_{PP} may overshoot to +14.0 V for periods <20 ns.
3. V_{PP} Program voltage is normally 1.65 V–3.6 V. Connection to a 11.4 V–12.6 V supply can be done for a maximum of 1000 cycles on the main blocks and 2500 cycles on the parameter blocks during program/erase. V_{PP} may be connected to 12 V for a total of 80 hours maximum.
4. Output shorted for no more than one second. No more than one output shorted at a time.

7.2 Operating Conditions

Table 10. Temperature and Voltage Operating Conditions

Symbol	Parameter	Notes	Min	Max	Units
T_A	Operating Temperature		–40	+85	°C
V_{CC1}	V_{CC} Supply Voltage	1, 2	2.7	3.6	Volts
V_{CC2}		1, 2	3.0	3.6	
V_{CCQ1}	I/O Supply Voltage	1	2.7	3.6	Volts
V_{CCQ2}			1.65	2.5	
V_{CCQ3}			1.8	2.5	
V_{PP1}	Supply Voltage	1	1.65	3.6	Volts
V_{PP2}		1, 3	11.4	12.6	Volts
Cycling	Block Erase Cycling	3	100,000		Cycles

NOTES:
1. V_{CC} and V_{CCQ} must share the same supply when they are in the V_{CC1} range.
2. V_{CC}Max = 3.3 V for 0.25µm 32-Mbit devices.
3. Applying V_{PP} = 11.4 V–12.6 V during a program/erase can only be done for a maximum of 1000 cycles on the main blocks and 2500 cycles on the parameter blocks. V_{PP} may be connected to 12 V for a total of 80 hours maximum.

7.3 DC Current Characteristics

Table 11. DC Current Characteristics (Sheet 1 of 3)

Sym	Parameter	V_{CC}	2.7 V–3.6 V		2.7 V–2.85 V		2.7 V–3.3 V		Unit	Test Conditions
		V_{CCQ}	2.7 V–3.6 V		1.65 V–2.5 V		1.8 V–2.5 V			
		Note	Typ	Max	Typ	Max	Typ	Max		
I_{LI}	Input Load Current	1,2		± 1		± 1		± 1	µA	V_{CC} = V_{CC}Max V_{CCQ} = V_{CCQ}Max V_{IN} = V_{CCQ} or GND
I_{LO}	Output Leakage Current	1,2		± 10		± 10		± 10	µA	V_{CC} = V_{CC}Max V_{CCQ} = V_{CCQ}Max V_{IN} = V_{CCQ} or GND

Table 11. DC Current Characteristics (Sheet 2 of 3)

Sym	Parameter	V_{CC}	2.7 V–3.6 V		2.7 V–2.85 V		2.7 V–3.3 V		Unit	Test Conditions
		V_{CCQ}	2.7 V–3.6 V		1.65 V–2.5 V		1.8 V–2.5 V			
		Note	Typ	Max	Typ	Max	Typ	Max		
I_{CCS}	V_{CC} Standby Current for 0.13 and 0.18 Micron Product	1	7	15	20	50	150	250	µA	V_{CC} = V_{CC}Max CE# = RP# = V_{CCQ} or during Program/ Erase Suspend WP# = V_{CCQ} or GND
	V_{CC} Standby Current for 0.25 Micron Product	1	10	25	20	50	150	250	µA	
I_{CCD}	V_{CC} Power-Down Current for 0.13 and 0.18 Micron Product	1,2	7	15	7	20	7	20	µA	V_{CC} = V_{CC}Max V_{CCQ} = V_{CCQ}Max V_{IN} = V_{CCQ} or GND RP# = GND ± 0.2 V
	V_{CC} Power-Down Current for 0.25 Product	1,2	7	25	7	25	7	25	µA	
I_{CCR}	V_{CC} Read Current for 0.13 and 0.18 Micron Product	1,2,3	9	18	8	15	9	15	mA	V_{CC} = V_{CC}Max V_{CCQ} = V_{CCQ}Max OE# = V_{IH}, CE# =V_{IL} f = 5 MHz, I_{OUT}=0 mA Inputs = V_{IL} or V_{IH}
	V_{CC} Read Current for 0.25 Micron Product	1,2,3	10	18	8	15	9	15	mA	
I_{PPD}	V_{PP} Deep Power-Down Current	1	0.2	5	0.2	5	0.2	5	µA	RP# = GND ± 0.2 V $V_{PP} \leq V_{CC}$
I_{CCW}	V_{CC} Program Current	1,4	18	55	18	55	18	55	mA	V_{PP} =V_{PP1}, Program in Progress
			8	22	10	30	10	30	mA	V_{PP} = V_{PP2} (12v) Program in Progress
I_{CCE}	V_{CC} Erase Current	1,4	16	45	21	45	21	45	mA	V_{PP} = V_{PP1}, Erase in Progress
			8	15	16	45	16	45	mA	V_{PP} = V_{PP2} (12v) , Erase in Progress
I_{CCES}/ I_{CCWS}	V_{CC} Erase Suspend Current for 0.13 and 0.18 Micron Product	1,4,5	7	15	50	200	50	200	µA	CE# = V_{IH}, Erase Suspend in Progress
	V_{CC} Erase Suspend Current for 0.25 Micron Product		10	25	50	200	50	200	µA	

Table 11. DC Current Characteristics (Sheet 3 of 3)

Sym	Parameter	V_{CC}	2.7 V–3.6 V		2.7 V–2.85 V		2.7 V–3.3 V		Unit	Test Conditions
		V_{CCQ}	2.7 V–3.6 V		1.65 V–2.5 V		1.8 V–2.5 V			
		Note	Typ	Max	Typ	Max	Typ	Max		
I_{PPR}	V_{PP} Read Current	1,4	2	±15	2	±15	2	±15	µA	$V_{PP} \leq V_{CC}$
			50	200	50	200	50	200	µA	$V_{PP} > V_{CC}$
I_{PPW}	V_{PP} Program Current	1,4	0.05	0.1	0.05	0.1	0.05	0.1	mA	$V_{PP} = V_{PP1}$, Program in Progress
			8	22	8	22	8	22	mA	$V_{PP} = V_{PP2}$ (12v) Program in Progress
I_{PPE}	V_{PP} Erase Current	1,4	0.05	0.1	0.05	0.1	0.05	0.1	mA	$V_{PP} = V_{PP1}$, Erase in Progress
			8	22	16	45	16	45	mA	$V_{PP} = V_{PP2}$ (12v) , Erase in Progress
I_{PPES}/ I_{PPWS}	V_{CC} Erase Suspend Current	1,4	0.2	5	0.2	5	0.2	5	µA	$V_{PP} = V_{PP1}$, Program or Erase Suspend in Progress
			50	200	50	200	50	200	µA	$V_{PP} = V_{PP2}$ (12v) , Program or Erase Suspend in Progress

NOTES:
1. All currents are in RMS unless otherwise noted. Typical values at nominal V_{CC}, T_A = +25 °C.
2. The test conditions V_{CC}Max, V_{CCQ}Max, V_{CC}Min, and V_{CCQ}Min refer to the maximum or minimum V_{CC} or V_{CCQ} voltage listed at the top of each column. V_{CC}Max = 3.3 V for 0.25µm 32-Mbit devices.
3. Automatic Power Savings (APS) reduces I_{CCR} to approximately standby levels in static operation (CMOS inputs).
4. Sampled, not 100% tested.
5. I_{CCES} or I_{CCWS} is specified with device de-selected. If device is read while in erase suspend, current draw is sum of I_{CCES} and I_{CCR}. If the device is read while in program suspend, current draw is the sum of I_{CCWS} and I_{CCR}.

7.4 DC Voltage Characteristics

Table 12. DC Voltage Characteristics

Sym	Parameter	V_{CC}	2.7 V–3.6 V		2.7 V–2.85 V		2.7 V–3.3 V		Unit	Test Conditions
		V_{CCQ}	2.7 V–3.6 V		1.65 V–2.5 V		1.8 V–2.5 V			
		Note	Min	Max	Min	Max	Min	Max		
V_{IL}	Input Low Voltage		–0.4	V_{CC} * 0.22 V	–0.4	0.4	–0.4	0.4	V	
V_{IH}	Input High Voltage		2.0	V_{CCQ} +0.3V	V_{CCQ} – 0.4V	V_{CCQ} +0.3V	V_{CCQ} – 0.4V	V_{CCQ} +0.3V	V	
V_{OL}	Output Low Voltage		–0.1	0.1	-0.1	0.1	-0.1	0.1	V	$V_{CC} = V_{CC}$Min $V_{CCQ} = V_{CCQ}$Min I_{OL} = 100 µA
V_{OH}	Output High Voltage		V_{CCQ} –0.1V		V_{CCQ} – 0.1V		V_{CCQ} – 0.1V		V	$V_{CC} = V_{CC}$Min $V_{CCQ} = V_{CCQ}$Min I_{OH} = –100 µA
V_{PPLK}	V_{PP} Lock-Out Voltage	1		1.0		1.0		1.0	V	Complete Write Protection
V_{PP1}	V_{PP} during Program / Erase Operations	1	1.65	3.6	1.65	3.6	1.65	3.6	V	
V_{PP2}		1,2	11.4	12.6	11.4	12.6	11.4	12.6	V	
V_{LKO}	V_{CC} Prog/ Erase Lock Voltage		1.5		1.5		1.5		V	
V_{LKO2}	V_{CCQ} Prog/ Erase Lock Voltage		1.2		1.2		1.2		V	

NOTES:
1. Erase and Program are inhibited when $V_{PP} < V_{PPLK}$ and not guaranteed outside the valid V_{PP} ranges of V_{PP1} and V_{PP2}.
2. Applying V_{PP} = 11.4 V–12.6 V during program/erase can only be done for a maximum of 1000 cycles on the main blocks and 2500 cycles on the parameter blocks. V_{PP} may be connected to 12 V for a total of 80 hours maximum.

8.0 AC Characteristics

8.1 AC Read Characteristics

Table 13. Read Operations—8 Mbit Density

#	Sym	Parameter	Density	8 Mbit								Unit
			Product	90 ns				110 ns				
			V_{CC}	3.0 V – 3.6 V		2.7 V – 3.6 V		3.0 V – 3.6 V		2.7 V – 3.6 V		
			Note	Min	Max	Min	Max	Min	Max	Min	Max	
R1	t_{AVAV}	Read Cycle Time	3,4	80		90		100		110		ns
R2	t_{AVQV}	Address to Output Delay	3,4		80		90		100		110	ns
R3	t_{ELQV}	CE# to Output Delay	1,3,4		80		90		100		110	ns
R4	t_{GLQV}	OE# to Output Delay	1,3,4		30		30		30		30	ns
R5	t_{PHQV}	RP# to Output Delay	3,4		150		150		150		150	ns
R6	t_{ELQX}	CE# to Output in Low Z	2,3,4	0		0		0		0		ns
R7	t_{GLQX}	OE# to Output in Low Z	2,3,4	0		0		0		0		ns
R8	t_{EHQZ}	CE# to Output in High Z	2,3,4		20		20		20		20	ns
R9	t_{GHQZ}	OE# to Output in High Z	2,3,4		20		20		20		20	ns
R10	t_{OH}	Output Hold from Address, CE#, or OE# Change, Whichever Occurs First	2,3,4	0		0		0		0		ns

NOTES:
1. OE# may be delayed up to t_{ELQV}–t_{GLQV} after the falling edge of CE# without impact on t_{ELQV}.
2. Sampled, but not 100% tested.
3. See Figure 8, “Read Operation Waveform” on page 42.
4. See Figure 11, “AC Input/Output Reference Waveform” on page 49 for timing measurements and maximum allowable input slew rate.

Table 14. Read Operations—16 Mbit Density

#	Sym	Parameter	Density	16 Mbit												Unit	Notes
			Product	70 ns		80 ns		90 ns				110 ns					
			V_{CC}	2.7 V–3.6 V		2.7 V–3.6 V		3.0 V–3.6 V		2.7 V–3.6 V		3.0 V–3.6V		2.7 V–3.6V			
				Min	Max	Min	Max	Min	Max	Min	Max	Min	Max	Min	Max		
R1	t_{AVAV}	Read Cycle Time		70		80		80		90		100		110		ns	3,4
R2	t_{AVQV}	Address to Output Delay			70		80		80		90		100		110	ns	3,4
R3	t_{ELQV}	CE# to Output Delay			70		80		80		90		100		110	ns	1,3,4
R4	t_{GLQV}	OE# to Output Delay			20		20		30		30		30		30	ns	1,3,4
R5	t_{PHQV}	RP# to Output Delay			150		150		150		150		150		150	ns	3,4
R6	t_{ELQX}	CE# to Output in Low Z		0		0		0		0		0		0		ns	2,3,4
R7	t_{GLQX}	OE# to Output in Low Z		0		0		0		0		0		0		ns	2,3,4
R8	t_{EHQZ}	CE# to Output in High Z			20		20		20		20		20		20	ns	2,3,4
R9	t_{GHQZ}	OE# to Output in High Z			20		20		20		20		20		20	ns	2,3,4
R10	t_{OH}	Output Hold from Address, CE#, or OE# Change, Whichever Occurs First		0		0		0		0		0		0		ns	2,3,4

NOTES:
1. OE# may be delayed up to t_{ELQV}–t_{GLQV} after the falling edge of CE# without impact on t_{ELQV}.
2. Sampled, but not 100% tested.
3. See Figure 8, “Read Operation Waveform” on page 42.
4. See Figure 11, “AC Input/Output Reference Waveform” on page 49 for timing measurements and maximum allowable input slew rate.

Table 15. Read Operations—32 Mbit Density

#	Sym	Para-meter	Density	32 Mbit												Unit	Notes
			Product	70 ns		90 ns		100 ns				110 ns					
			V_{CC}	2.7 V–3.6 V		2.7 V–3.6 V		3.0 V–3.3 V		2.7 V–3.3 V		3.0 V–3.3 V		2.7 V–3.3 V			
				Min	Max	Min	Max	Min	Max	Min	Max	Min	Max	Min	Max		
R1	t_{AVAV}	Read Cycle Time		70		90		90		100		100		110		ns	3,4
R2	t_{AVQV}	Address to Output Delay			70		90		90		100		100		110	ns	3,4
R3	t_{ELQV}	CE# to Output Delay			70		90		90		100		100		110	ns	1,3,4
R4	t_{GLQV}	OE# to Output Delay			20		20		30		30		30		30	ns	1,3,4
R5	t_{PHQV}	RP# to Output Delay			150		150		150		150		150		150	ns	3,4
R6	t_{ELQX}	CE# to Output in Low Z		0		0		0		0		0		0		ns	2,3,4
R7	t_{GLQX}	OE# to Output in Low Z		0		0		0		0		0		0		ns	2,3,4
R8	t_{EHQZ}	CE# to Output in High Z			20		20		20		20		20		20	ns	2,3,4
R9	t_{GHQZ}	OE# to Output in High Z			20		20		20		20		20		20	ns	2,3,4
R10	t_{OH}	Output Hold from Address, CE#, or OE# Change, Whichever Occurs First		0		0		0		0		0		0		ns	2,3,4

NOTES:
1. OE# may be delayed up to t_{ELQV}–t_{GLQV} after the falling edge of CE# without impact on t_{ELQV}.
2. Sampled, but not 100% tested.
3. See Figure 8, “Read Operation Waveform” on page 42.
4. See Figure 11, “AC Input/Output Reference Waveform” on page 49 for timing measurements and maximum allowable input slew rate.

Table 16. Read Operations — 64 Mbit Density

#	Sym	Parameter	Density	64 Mbit				Unit
			Product	70 ns		80 ns		
			V_{CC}	2.7 V–3.6 V		2.7 V–3.6 V		
			Note	Min	Max	Min	Max	
R1	t_{AVAV}	Read Cycle Time	3,4	70		80		ns
R2	t_{AVQV}	Address to Output Delay	3,4		70		80	ns
R3	t_{ELQV}	CE# to Output Delay	1,3,4		70		80	ns
R4	t_{GLQV}	OE# to Output Delay	1,3,4		20		20	ns
R5	t_{PHQV}	RP# to Output Delay	3,4		150		150	ns
R6	t_{ELQX}	CE# to Output in Low Z	2,3,4	0		0		ns
R7	t_{GLQX}	OE# to Output in Low Z	2,3,4	0		0		ns
R8	t_{EHQZ}	CE# to Output in High Z	2,3,4		20		20	ns
R9	t_{GHQZ}	OE# to Output in High Z	2,3,4		20		20	ns
R10	t_{OH}	Output Hold from Address, CE#, or OE# Change, Whichever Occurs First	2,3,4	0		0		ns

NOTES:
1. OE# may be delayed up to t_{ELQV}–t_{GLQV} after the falling edge of CE# without impact on t_{ELQV}.
2. Sampled, but not 100% tested.
3. See Figure 8, “Read Operation Waveform” on page 42.
4. See Figure 11, “AC Input/Output Reference Waveform” on page 49 for timing measurements and maximum allowable input slew rate.

Figure 8. Read Operation Waveform

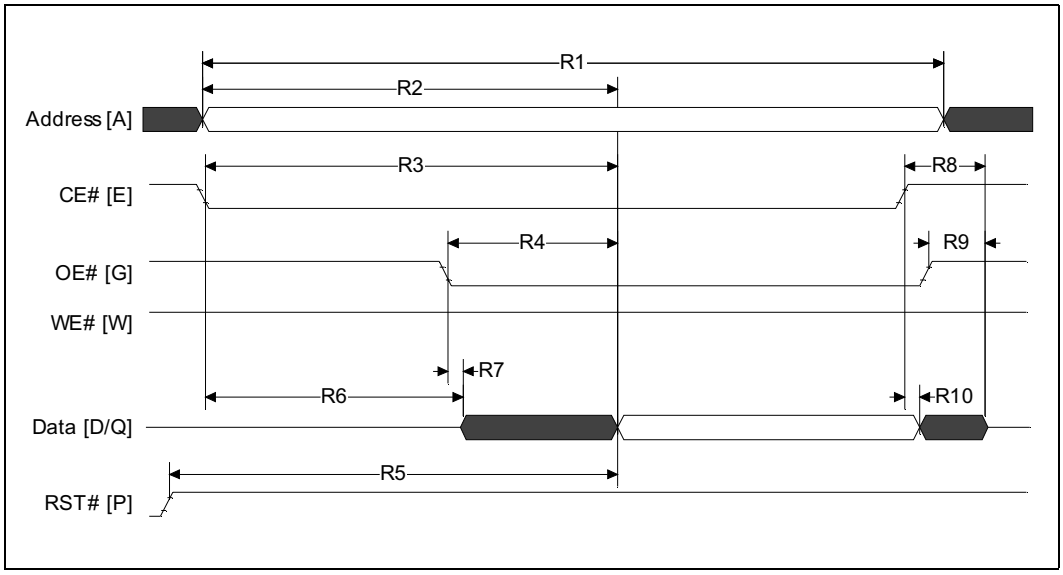

8.2 AC Write Characteristics

Table 17. Write Operations—8 Mbit Density

#	Sym	Parameter	Density			8 Mbit				Unit
			Product			90 ns		110 ns		
			V_{CC}	3.0 V – 3.6 V		80		100		
				2.7 V – 3.6 V			90		110	
					Note	Min	Min	Min	Min	
W1	t_{PHWL} / t_{PHEL}	RP# High Recovery to WE# (CE#) Going Low			4,5	150	150	150	150	ns
W2	t_{ELWL} / t_{WLEL}	CE# (WE#) Setup to WE# (CE#) Going Low			4,5	0	0	0	0	ns
W3	t_{WLWH} / t_{ELEH}	WE# (CE#) Pulse Width			4,5	50	60	70	70	ns
W4	t_{DVWH} / t_{DVEH}	Data Setup to WE# (CE#) Going High			2,4,5	50	50	60	60	ns
W5	t_{AVWH} / t_{AVEH}	Address Setup to WE# (CE#) Going High			2,4,5	50	60	70	70	ns
W6	t_{WHEH} / t_{EHWH}	CE# (WE#) Hold Time from WE# (CE#) High			4,5	0	0	0	0	ns
W7	t_{WHDX} / t_{EHDX}	Data Hold Time from WE# (CE#) High			2,4,5	0	0	0	0	ns
W8	t_{WHAX} / t_{EHAX}	Address Hold Time from WE# (CE#) High			2,4,5	0	0	0	0	ns
W9	t_{WHWL} / t_{EHEL}	WE# (CE#) Pulse Width High			2,4,5	30	30	30	30	ns
W10	t_{VPWH} / t_{VPEH}	V_{PP} Setup to WE# (CE#) Going High			3,4,5	200	200	200	200	ns
W11	t_{QVVL}	V_{PP} Hold from Valid SRD			3,4	0	0	0	0	ns
W12	t_{BHWH} / t_{BHEH}	WP# Setup to WE# (CE#) Going High			3,4	0	0	0	0	ns
W13	t_{QVBL}	WP# Hold from Valid SRD			3,4	0	0	0	0	ns
W14	t_{WHGL}	WE# High to OE# Going Low			3,4	30	30	30	30	ns

NOTES:
1. Write pulse width (t_{WP}) is defined from CE# or WE# going low (whichever goes low last) to CE# or WE# going high (whichever goes high first). Hence, $t_{WP} = t_{WLWH} = t_{ELEH} = t_{WLEH} = t_{ELWH}$. Similarly, write pulse width high (t_{WPH}) is defined from CE# or WE# going high (whichever goes high first) to CE# or WE# going low (whichever goes low last). Hence, $t_{WPH} = t_{WHWL} = t_{EHEL} = t_{WHEL} = t_{EHWL}$.
2. Refer to Table 7, "Command Bus Operations" on page 24 for valid A_{IN} or D_{IN}.
3. Sampled, but not 100% tested.
4. See Figure 11, "AC Input/Output Reference Waveform" on page 49 for timing measurements and maximum allowable input slew rate.
5. See *Figure 9, "Write Operations Waveform" on page 47.*

Table 18. Write Operations—16 Mbit Density

#	Sym	Parameter	Density			16 Mbit						Unit
			Product			70 ns	80 ns	90 ns		110 ns		
			V_{CC}	3.0 V – 3.6 V				80		100		
				2.7 V – 3.6 V		70	80		90		110	
					Note	Min	Min	Min	Min	Min	Min	
W1	t_{PHWL} / t_{PHEL}	RP# High Recovery to WE# (CE#) Going Low			4,5	150	150	150	150	150	150	ns
W2	t_{ELWL} / t_{WLEL}	CE# (WE#) Setup to WE# (CE#) Going Low			4,5	0	0	0	0	0	0	ns
W3	t_{WLWH} / t_{ELEH}	WE# (CE#) Pulse Width			1,4,5	45	50	50	60	70	70	ns
W4	t_{DVWH} / t_{DVEH}	Data Setup to WE# (CE#) Going High			2,4,5	40	40	50	50	60	60	ns
W5	t_{AVWH} / t_{AVEH}	Address Setup to WE# (CE#) Going High			2,4,5	50	50	50	60	70	70	ns
W6	t_{WHEH} / t_{EHWH}	CE# (WE#) Hold Time from WE# (CE#) High			4,5	0	0	0	0	0	0	ns
W7	t_{WHDX} / t_{EHDX}	Data Hold Time from WE# (CE#) High			2,4,5	0	0	0	0	0	0	ns
W8	t_{WHAX} / t_{EHAX}	Address Hold Time from WE# (CE#) High			2,4,5	0	0	0	0	0	0	ns
W9	t_{WHWL} / t_{EHEL}	WE# (CE#) Pulse Width High			1,4,5	25	30	30	30	30	30	ns
W10	t_{VPWH} / t_{VPEH}	V_{PP} Setup to WE# (CE#) Going High			3,4,5	200	200	200	200	200	200	ns
W11	t_{QVVL}	V_{PP} Hold from Valid SRD			3,4	0	0	0	0	0	0	ns
W12	t_{BHWH} / t_{BHEH}	WP# Setup to WE# (CE#) Going High			3,4	0	0	0	0	0	0	ns
W13	t_{QVBL}	WP# Hold from Valid SRD			3,4	0	0	0	0	0	0	ns
W14	t_{WHGL}	WE# High to OE# Going Low			3,4	30	30	30	30	30	30	ns

NOTES:

1. Write pulse width (t_{WP}) is defined from CE# or WE# going low (whichever goes low last) to CE# or WE# going high (whichever goes high first). Hence, $t_{WP} = t_{WLWH} = t_{ELEH} = t_{WLEH} = t_{ELWH}$. Similarly, write pulse width high (t_{WPH}) is defined from CE# or WE# going high (whichever goes high first) to CE# or WE# going low (whichever goes low last). Hence, $t_{WPH} = t_{WHWL} = t_{EHEL} = t_{WHEL} = t_{EHWL}$.
2. Refer to Table 7, "Command Bus Operations" on page 24 for valid A_{IN} or D_{IN}.
3. Sampled, but not 100% tested.
4. See Figure 11, "AC Input/Output Reference Waveform" on page 49 for timing measurements and maximum allowable input slew rate.
5. See *Figure 9, "Write Operations Waveform" on page 47*.

Table 19. Write Operations—32 Mbit Density

#	Sym	Parameter	Density		32 Mbit						Unit
			Product		70 ns	90 ns	100 ns		110 ns		
			V_{CC}	3.0 V – 3.6 V[6]			90		100		
				2.7 V – 3.6 V	70	90		100		110	
				Note	Min	Min	Min	Min	Min	Min	
W1	t_{PHWL} / t_{PHEL}	RP# High Recovery to WE# (CE#) Going Low		4,5	150	150	150	150	150	150	ns
W2	t_{ELWL} / t_{WLEL}	CE# (WE#) Setup to WE# (CE#) Going Low		4,5	0	0	0	0	0	0	ns
W3	t_{WLWH} / t_{ELEH}	WE# (CE#) Pulse Width		1,4,5	45	60	60	70	70	70	ns
W4	t_{DVWH} / t_{DVEH}	Data Setup to WE# (CE#) Going High		2,4,5	40	40	50	60	60	60	ns
W5	t_{AVWH} / t_{AVEH}	Address Setup to WE# (CE#) Going High		2,4,5	50	60	60	70	70	70	ns
W6	t_{WHEH} / t_{EHWH}	CE# (WE#) Hold Time from WE# (CE#) High		4,5	0	0	0	0	0	0	ns
W7	t_{WHDX} / t_{EHDX}	Data Hold Time from WE# (CE#) High		2,4,5	0	0	0	0	0	0	ns
W8	t_{WHAX} / t_{EHAX}	Address Hold Time from WE# (CE#) High		2,4,5	0	0	0	0	0	0	ns
W9	t_{WHWL} / t_{EHEL}	WE# (CE#) Pulse Width High		1,4,5	25	30	30	30	30	30	ns
W10	t_{VPWH} / t_{VPEH}	V_{PP} Setup to WE# (CE#) Going High		3,4,5	200	200	200	200	200	200	ns
W11	t_{QVVL}	V_{PP} Hold from Valid SRD		3,4	0	0	0	0	0	0	ns
W12	t_{BHWH} / t_{BHEH}	WP# Setup to WE# (CE#) Going High		3,4	0	0	0	0	0	0	ns
W13	t_{QVBL}	WP# Hold from Valid SRD		3,4	0	0	0	0	0	0	ns
W14	t_{WHGL}	WE# High to OE# Going Low		3,4	30	30	30	30	30	30	ns

NOTES:

1. Write pulse width (t_{WP}) is defined from CE# or WE# going low (whichever goes low last) to CE# or WE# going high (whichever goes high first). Hence, $t_{WP} = t_{WLWH} = t_{ELEH} = t_{WLEH} = t_{ELWH}$. Similarly, write pulse width high (t_{WPH}) is defined from CE# or WE# going high (whichever goes high first) to CE# or WE# going low (whichever goes low last). Hence, $t_{WPH} = t_{WHWL} = t_{EHEL} = t_{WHEL} = t_{EHWL}$.
2. Refer to Table 7, "Command Bus Operations" on page 24 for valid A_{IN} or D_{IN}.
3. Sampled, but not 100% tested.
4. See Figure 11, "AC Input/Output Reference Waveform" on page 49 for timing measurements and maximum allowable input slew rate.
5. See *Figure 9, "Write Operations Waveform" on page 47.*
6. V_{CC}Max = 3.3 V for 32-Mbit 0.25 Micron product.

Table 20. Write Operations—64Mbit Density

#	Sym	Parameter	Density			64 Mbit	Unit
			Product			80 ns	
			V_{CC}	2.7 V – 3.6 V	Note	Min	
W1	t_{PHWL} / t_{PHEL}	RP# High Recovery to WE# (CE#) Going Low			4,5	150	ns
W2	t_{ELWL} / t_{WLEL}	CE# (WE#) Setup to WE# (CE#) Going Low			4,5	0	ns
W3	t_{WLWH} / t_{ELEH}	WE# (CE#) Pulse Width			1,4,5	60	ns
W4	t_{DVWH} / t_{DVEH}	Data Setup to WE# (CE#) Going High			2,4,5	40	ns
W5	t_{AVWH} / t_{AVEH}	Address Setup to WE# (CE#) Going High			2,4,5	60	ns
W6	t_{WHEH} / t_{EHWH}	CE# (WE#) Hold Time from WE# (CE#) High			4,5	0	ns
W7	t_{WHDX} / t_{EHDX}	Data Hold Time from WE# (CE#) High			2,4,5	0	ns
W8	t_{WHAX} / t_{EHAX}	Address Hold Time from WE# (CE#) High			2,4,5	0	ns
W9	t_{WHWL} / t_{EHEL}	WE# (CE#) Pulse Width High			1,4,5	30	ns
W10	t_{VPWH} / t_{VPEH}	V_{PP} Setup to WE# (CE#) Going High			3,4,5	200	ns
W11	t_{QVVL}	V_{PP} Hold from Valid SRD			3,4	0	ns
W12	t_{BHWH} / t_{BHEH}	WP# Setup to WE# (CE#) Going High			3,4	0	ns
W13	t_{QVBL}	WP# Hold from Valid SRD			3,4	0	ns
W14	t_{WHGL}	WE# High to OE# Going Low			3,4	30	ns

NOTES:

1. Write pulse width (t_{WP}) is defined from CE# or WE# going low (whichever goes low last) to CE# or WE# going high (whichever goes high first). Hence, $t_{WP} = t_{WLWH} = t_{ELEH} = t_{WLEH} = t_{ELWH}$. Similarly, write pulse width high (t_{WPH}) is defined from CE# or WE# going high (whichever goes high first) to CE# or WE# going low (whichever goes low last). Hence, $t_{WPH} = t_{WHWL} = t_{EHEL} = t_{WHEL} = t_{EHWL}$.
2. Refer to Table 7, "Command Bus Operations" on page 24 for valid A_{IN} or D_{IN}.
3. Sampled, but not 100% tested.
4. See Figure 11, "AC Input/Output Reference Waveform" on page 49 for timing measurements and maximum allowable input slew rate.
5. See *Figure 9, "Write Operations Waveform" on page 47*.

Figure 9. Write Operations Waveform

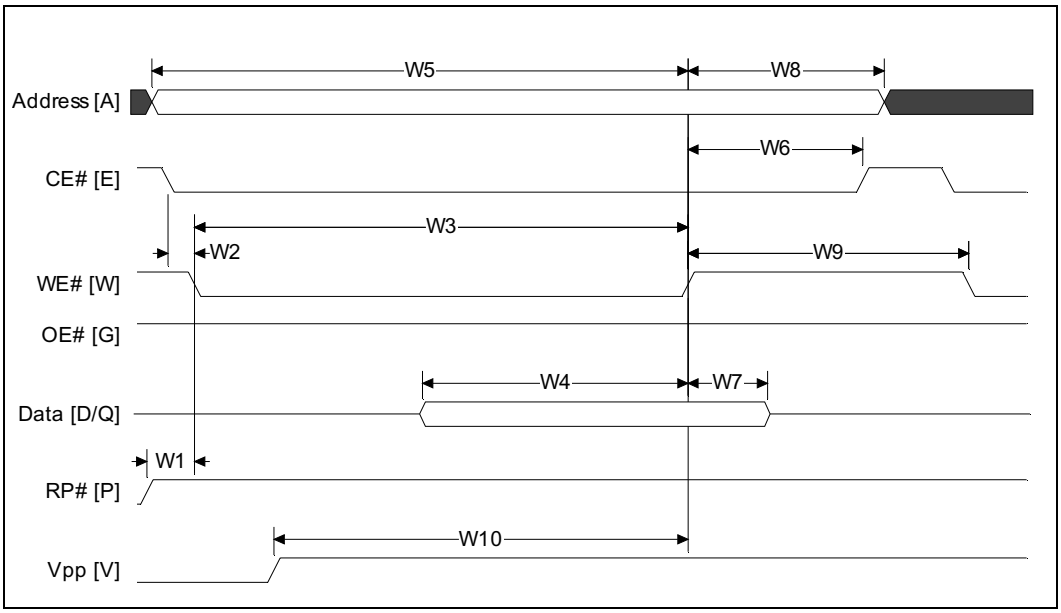

8.3 Erase and Program Timings

Table 21. Erase and Program Timings

Symbol	Parameter	V_{PP}	1.65 V–3.6 V		11.4 V–12.6 V		Unit
		Note	Typ	Max	Typ	Max	
t_{BWPB}	4-KW Parameter Block Word Program Time	1, 2, 3	0.10	0.30	0.03	0.12	s
t_{BWMB}	32-KW Main Block Word Program Time	1, 2, 3	0.8	2.4	0.24	1	s
t_{WHQV1} / t_{EHQV1}	Word Program Time for 0.13 and 0.18 Micron Product	1, 2, 3	12	200	8	185	µs
	Word Program Time for 0.25 Micron Product	1, 2, 3	22	200	8	185	µs
t_{WHQV2} / t_{EHQV2}	4-KW Parameter Block Erase Time	1, 2, 3	0.5	4	0.4	4	s
t_{WHQV3} / t_{EHQV3}	32-KW Main Block Erase Time	1, 2, 3	1	5	0.6	5	s
t_{WHRH1} / t_{EHRH1}	Program Suspend Latency	1,3	5	10	5	10	µs
t_{WHRH2} / t_{EHRH2}	Erase Suspend Latency	1,3	5	20	5	20	µs

NOTES:
1. Typical values measured at T_A= +25 °C and nominal voltages.
2. Excludes external system-level overhead.
3. Sampled, but not 100% tested.

8.4 Reset Specifications

Table 22. Reset Specifications

Symbol	Parameter	Notes	V_{CC} 2.7 V – 3.6 V		Unit
			Min	Max	
t_{PLPH}	RP# Low to Reset during Read (If RP# is tied to V_{CC}, this specification is not applicable)	1, 2	100		ns
t_{PLRH1}	RP# Low to Reset during Block Erase	3		22	µs
t_{PLRH2}	RP# Low to Reset during Program	3		12	µs

NOTES:
1. If t_{PLPH} is < 100 ns the device may still reset but this is not guaranteed.
2. If RP# is asserted while a Block Erase or Word Program operation is not executing, the reset will complete within 100 ns.
3. Sampled, but not 100% tested.

Figure 10. Reset Operations Waveforms

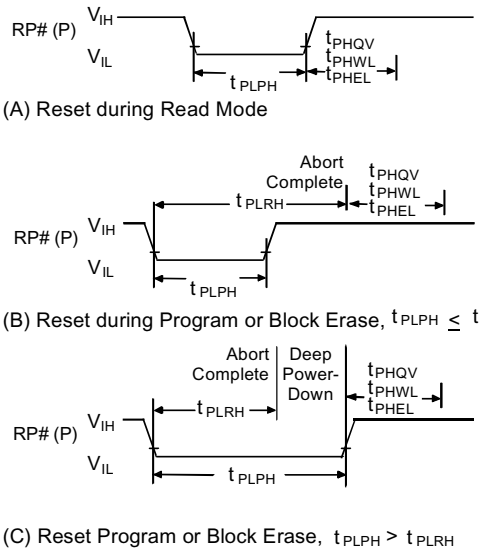

8.5 AC I/O Test Conditions

Figure 11. AC Input/Output Reference Waveform

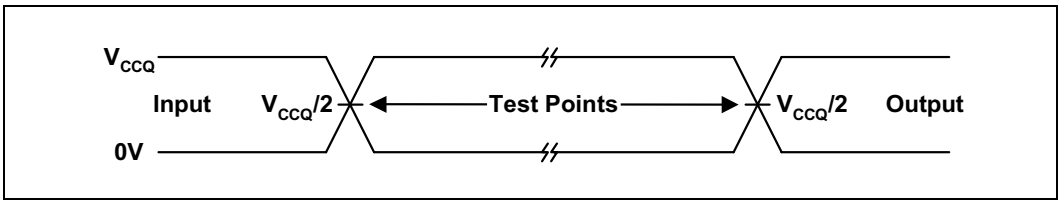

NOTE: Input timing begins, and output timing ends, at $V_{CCQ}/2$. Input rise and fall times (10% to 90%) < 5 ns. Worst case speed conditions are when $V_{CC} = V_{CC}$Min.

Figure 12. Transient Equivalent Testing Load Circuit

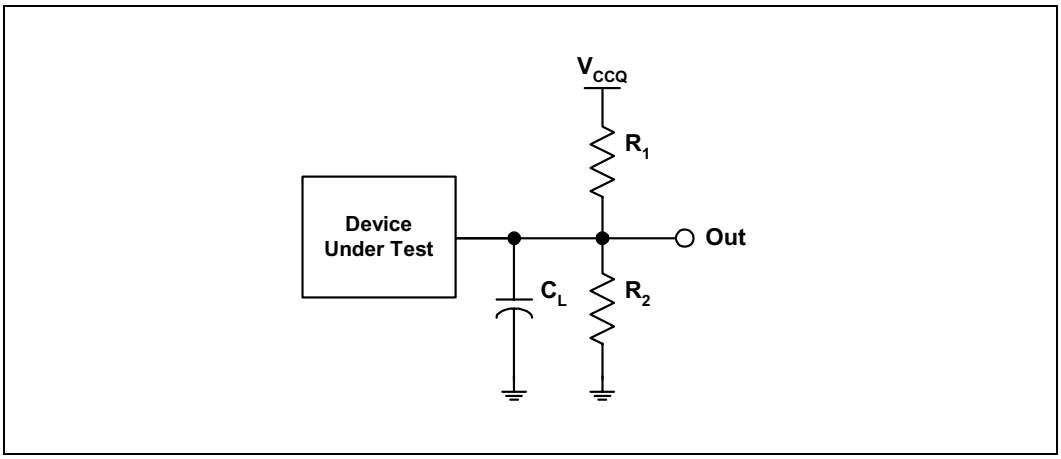

NOTE: See Table 17 for component values.

Table 23. Test Configuration Component Values for Worst Case Speed Conditions

Test Configuration	C_L (pF)	R_1 (kΩ)	R_2 (kΩ)
V_{CCQ}Min Standard Test	50	25	25

NOTE: C_L includes jig capacitance.

8.6 Device Capacitance

T_A = 25 °C, f = 1 MHz

Symbol	Parameter§	Typ	Max	Unit	Condition
C_{IN}	Input Capacitance	6	8	pF	V_{IN} = 0.0 V
C_{OUT}	Output Capacitance	8	12	pF	V_{OUT} = 0.0 V

§Sampled, not 100% tested.

Appendix A Write State Machine States

This table shows the command state transitions based on incoming commands.

Current State	SR.7	Data When Read	Command Input (and Next State)							
			Read Array (FFH)	Program Setup (10/ 40H)	Erase Setup (20H)	Erase Confirm (D0H)	Prog/Ers Suspend (B0H)	Prog/Ers Resume (D0)	Read Status (70H)	Clear Status (50H)
Read Array	"1"	Array	Read Array	Prog. Setup	Ers. Setup	Read Array			Read Sts.	Read Array
Read Status	"1"	Status	Read Array	Prog. Setup	Ers. Setup	Read Array			Read Sts.	Read Array
Read Config.	"1"	Config	Read Array	Prog. Setup	Ers. Setup	Read Array			Read Sts.	Read Array
Read Query	"1"	CFI	Read Array	Prog. Setup	Ers. Setup	Read Array			Read Sts.	Read Array
Lock Setup	"1"	Status	Lock Command Error			Lock (Done)	Lock Cmd. Error	Lock (Done)	Lock Cmd. Error	
Lock Cmd. Error	"1"	Status	Read Array	Prog. Setup	Ers. Setup	Read Array			Read Sts.	Read Array
Lock Oper. (Done)	"1"	Status	Read Array	Prog. Setup	Ers. Setup	Read Array			Read Sts.	Read Array
Prot. Prog. Setup	"1"	Status	Protection Register Program							
Prot. Prog. (Not Done)	"0"	Status	Protection Register Program (Not Done)							
Prot. Prog. (Done)	"1"	Status	Read Array	Prog. Setup	Ers. Setup	Read Array			Read Sts.	Read Array
Prog. Setup	"1"	Status	Program							
Program (Not Done)	"0"	Status	Program (Not Done)				Prog. Sus. Status	Program (Not Done)		
Prog. Susp. Status	"1"	Status	Prog. Sus. Read Array	Program Suspend Read Array		Prog. (Not Done)	Prog. Sus. Rd. Array	Program (Not Done)	Prog. Sus. Status	Prog. Sus. Rd. Array
Prog. Susp. Read Array	"1"	Array	Prog. Sus. Read Array	Program Suspend Read Array		Prog. (Not Done)	Prog. Sus. Rd. Array	Program (Not Done)	Prog. Sus. Status	Prog. Sus. Rd. Array
Prog. Susp. Read Config	"1"	Config	Prog. Sus. Read Array	Program Suspend Read Array		Prog. (Not Done)	Prog. Sus. Rd. Array	Program (Not Done)	Prog. Sus. Status	Prog. Sus. Rd. Array
Prog. Susp. Read Query	"1"	CFI	Prog. Sus. Read Array	Program Suspend Read Array		Prog. (Not Done)	Prog. Sus. Rd. Array	Program (Not Done)	Prog. Sus. Status	Prog. Sus. Rd. Array
Program (Done)	"1"	Status	Read Array	Prog. Setup	Ers. Setup	Read Array			Read Status	Read Array
Erase Setup	"1"	Status	Erase Command Error			Erase (Not Done)	Erase Cmd. Error	Erase (Not Done)	Erase Command Error	
Erase Cmd. Error	"1"	Status	Read Array	Prog. Setup	Ers. Setup	Read Array			Read Status	Read Array
Erase (Not Done)	"0"	Status	Erase (Not Done)				Erase Sus. Status	Erase (Not Done)		
Ers. Susp. Status	"1"	Status	Erase Sus. Read Array	Prog. Setup	Ers. Sus. Rd. Array	Erase	Ers. Sus. Rd. Array	Erase	Erase Sus. Status	Ers. Sus. Rd. Array
Erase Susp. Array	"1"	Array	Erase Sus. Read Array	Prog. Setup	Ers. Sus. Rd. Array	Erase	Ers. Sus. Rd. Array	Erase	Erase Sus. Status	Ers. Sus. Rd. Array
Ers. Susp. Read Config	"1"	Config	Erase Sus. Read Array	Prog. Setup	Ers. Sus. Rd. Array	Erase	Ers. Sus. Rd. Array	Erase	Erase Sus. Status	Ers. Sus. Rd. Array
Ers. Susp. Read Query	"1"	CFI	Erase Sus. Read Array	Prog. Setup	Ers. Sus. Rd. Array	Erase	Ers. Sus. Rd. Array	Erase	Erase Sus. Status	Ers. Sus. Rd. Array
Erase (Done)	"1"	Status	Read Array	Prog. Setup	Ers. Setup	Read Array			Read Sts.	Read Array

Current State	Command Input (and Next State)						
	Read Config (90H)	Read Query (98H)	Lock Setup (60H)	Prot. Prog. Setup (C0H)	Lock Confirm (01H)	Lock Down Confirm (2FH)	Unlock Confirm (D0H)
Read Array	Read Config.	Read Query	Lock Setup	Prot. Prog. Setup	Read Array		
Read Status	Read Config.	Read Query	Lock Setup	Prot. Prog. Setup	Read Array		
Read Config.	Read Config.	Read Query	Lock Setup	Prot. Prog. Setup	Read Array		
Read Query	Read Config.	Read Query	Lock Setup	Prot. Prog. Setup	Read Array		
Lock Setup	Locking Command Error				Lock Operation (Done)		
Lock Cmd. Error	Read Config.	Read Query	Lock Setup	Prot. Prog. Setup	Read Array		
Lock Oper. (Done)	Read Config.	Read Query	Lock Setup	Prot. Prog. Setup	Read Array		
Prot. Prog. Setup	Protection Register Program						
Prot. Prog. (Not Done)	Protection Register Program (Not Done)						
Prot. Prog. (Done)	Read Config.	Read Query	Lock Setup	Prot. Prog. Setup	Read Array		
Prog. Setup	Program						
Program (Not Done)	Program (Not Done)						
Prog. Susp. Status	Prog. Susp. Read Config.	Prog. Susp. Read Query	Program Suspend Read Array				Program (Not Done)
Prog. Susp. Read Array	Prog. Susp. Read Config.	Prog. Susp. Read Query	Program Suspend Read Array				Program (Not Done)
Prog. Susp. Read Config.	Prog. Susp. Read Config.	Prog. Susp. Read Query	Program Suspend Read Array				Program (Not Done)
Prog. Susp. Read Query.	Prog. Susp. Read Config.	Prog. Susp. Read Query	Program Suspend Read Array				Program (Not Done)
Program (Done)	Read Config.	Read Query	Lock Setup	Prot. Prog. Setup	Read Array		
Erase Setup	Erase Command Error						Erase (Not Done)
Erase Cmd. Error	Read Config.	Read Query	Lock Setup	Prot. Prog. Setup	Read Array		
Erase (Not Done)	Erase (Not Done)						
Erase Susp. Status	Ers. Susp. Read Config.	Erase Suspend Read Query	Lock Setup	Erase Suspend Read Array			Erase (Not Done)
Erase Suspend Array	Ers. Susp. Read Config.	Erase Suspend Read Query	Lock Setup	Erase Suspend Read Array			Erase (Not Done)
Eras Sus. Read Config	Erase Suspend Read Config.	Erase Suspend Read Query	Lock Setup	Erase Suspend Read Array			Erase (Not Done)
Eras Sus. Read Query	Erase Suspend Read Config.	Erase Suspend Read Query	Lock Setup	Erase Suspend Read Array			Erase (Not Done)
Ers.(Done)	Read Config.	Read Query	Lock Setup	Prot. Prog. Setup	Read Array		

Appendix B Flow Charts

Figure 13. Word Program Flowchart

WORD PROGRAM PROCEDURE

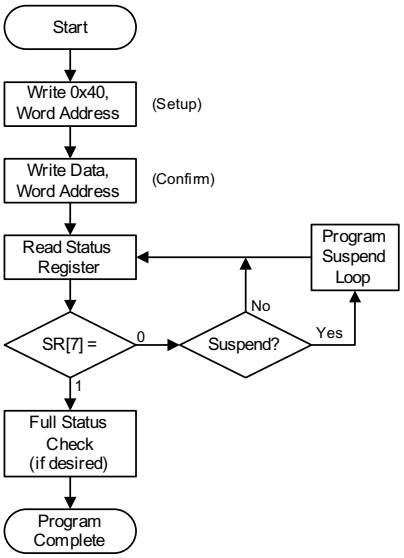

Bus Operation	Command	Comments
Write	Program Setup	Data = 0x40 Addr = Location to program
Write	Data	Data = Data to program Addr = Location to program
Read	None	Status register data: Toggle CE# or OE# to update Status Register
Idle	None	Check SR[7] 1 = WSM Ready 0 = WSM Busy

Repeat for subsequent Word Program operations.

Full Status Register check can be done after each program, or after a sequence of program operations.

Write 0xFF after the last operation to set to the Read Array state.

FULL STATUS CHECK PROCEDURE

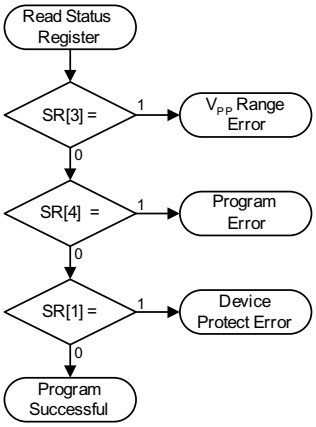

Bus Operation	Command	Comments
Idle	None	Check SR[3]: 1 = V_{PP} Error
Idle	None	Check SR[4]: 1 = Data Program Error
Idle	None	Check SR[1]: 1 = Block locked; operation aborted

SR[3] MUST be cleared before the Write State Machine will allow further program attempts.

If an error is detected, clear the Status Register before continuing operations - only the Clear Staus Register command clears the Status Register error bits.

Figure 14. Program Suspend / Resume Flowchart

PROGRAM SUSPEND / RESUME PROCEDURE

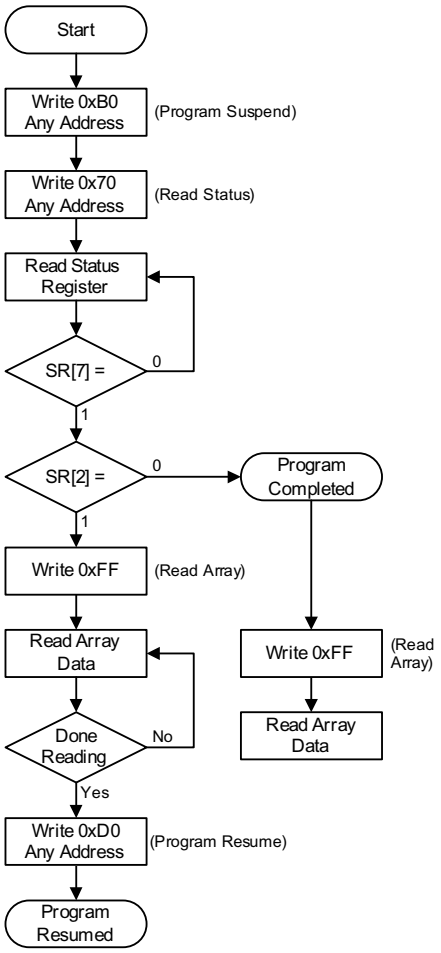

Bus Operation	Command	Comments
Write	Read Status	Data = 0x70 Addr = Any address
Write	Program Suspend	Data = 0xB0 Addr = Any address
Read	None	Status register data Toggle CE# or OE# to update Status register Addr = Any address
Idle	None	Check SR[7]: 1 = WSM ready 0 = WSM busy
Idle	None	Check SR[2]: 1 = Program suspended 0 = Program completed
Write	Read Array	Data = 0xFF Addr = Any address
Read	None	Read array data from block other than the one being programmed
Write	Program Resume	Data = 0xD0 Addr = Any address

Figure 15. Erase Suspend / Resume Flowchart

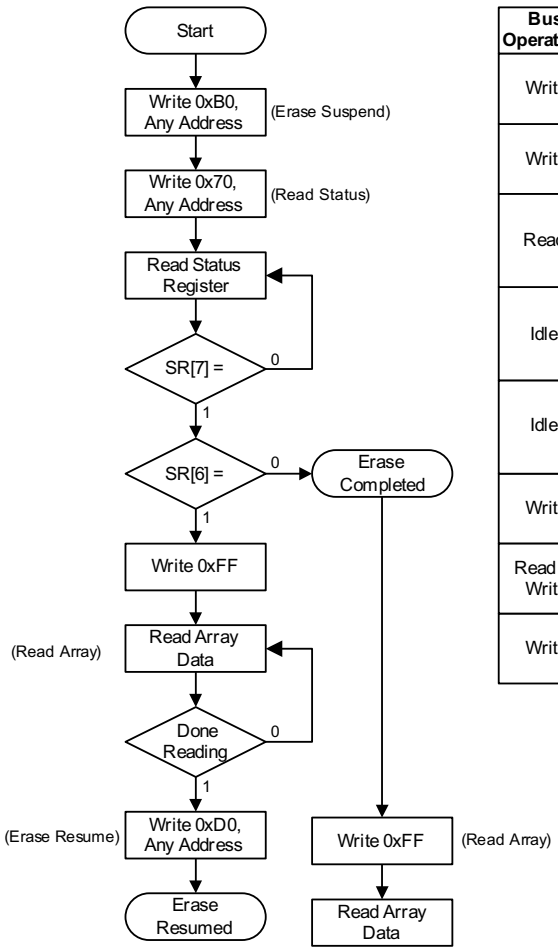

Bus Operation	Command	Comments
Write	Read Status	Data = 0x70 Addr = Any address
Write	Erase Suspend	Data = 0xB0 Addr = Any address
Read	None	Status Register data. Toggle CE# or OE# to update Status register; Addr = Any Address
Idle	None	Check SR[7]: 1 = WSM ready 0 = WSM busy
Idle	None	Check SR[6]: 1 = Erase suspended 0 = Erase completed
Write	Read Array or Program	Data = 0xFF or 0x40 Addr = Any address
Read or Write	None	Read array or program data from/to block other than the one being erased
Write	Program Resume	Data = 0xD0 Addr = Any address

Figure 16. Block Erase Flowchart

BLOCK ERASE PROCEDURE

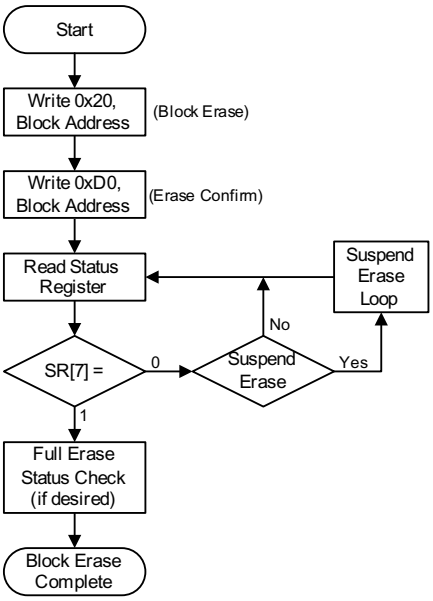

Bus Operation	Command	Comments
Write	Block Erase Setup	Data = 0x20 Addr = Block to be erased (BA)
Write	Erase Confirm	Data = 0xD0 Addr = Block to be erased (BA)
Read	None	Status Register data. Toggle CE# or OE# to update Status register data
Idle	None	Check SR[7]: 1 = WSM ready 0 = WSM busy

Repeat for subsequent block erasures.

Full Status register check can be done after each block erase or after a sequence of block erasures.

Write 0xFF after the last operation to enter read array mode.

FULL ERASE STATUS CHECK PROCEDURE

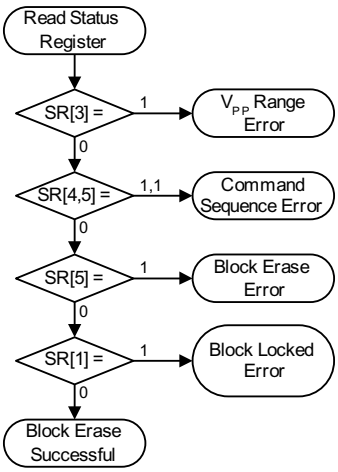

Bus Operation	Command	Comments
Idle	None	Check SR[3]: 1 = V_{PP} Range Error
Idle	None	Check SR[4,5]: Both 1 = Command Sequence Error
Idle	None	Check SR[5]: 1 = Block Erase Error
Idle	None	Check SR[1]: 1 = Attempted erase of locked block; erase aborted.

SR[1,3] must be cleared before the Write State Machine will allow further erase attempts.

Only the Clear Status Register command clears SR[1, 3, 4, 5].

If an error is detected, clear the Status register before attempting an erase retry or other error recovery.

Figure 17. Locking Operations Flowchart

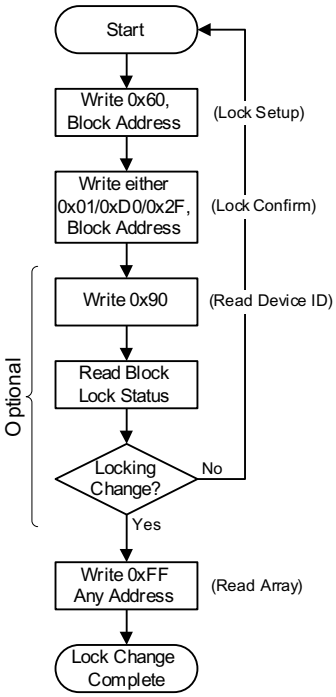

Bus Operation	Command	Comments
Write	Lock Setup	Data = 0x60 Addr = Any Address
Write	Lock, Unlock, or Lock-Down Confirm	Data = 0x01 (Block Lock) 0xD0 (Block Unlock) 0x2F (Lock-Down Block) Addr = Block to lock/unlock/lock-down
Write (Optional)	Read Device ID	Data = 0x90 Addr = Any Address
Read (Optional)	Block Lock Status	Block Lock status data Addr = Block address + offset 2
Idle (Optional)	None	Confirm locking change on D[1,0] .
Write	Read Array	Data = 0xFF Addr = Any address

Figure 18. Protection Register Programming Flowchart

PROTECTION REGISTER PROGRAMMING PROCEDURE

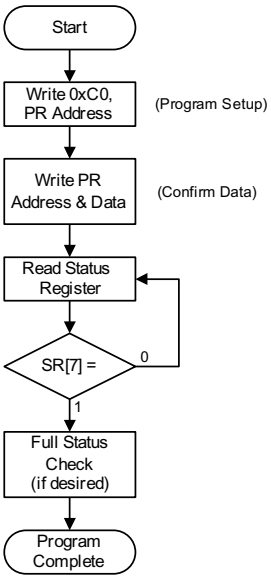

Bus Operation	Command	Comments
Write	Program PR Setup	Data = 0xC0 Addr = First Location to Program
Write	Protection Program	Data = Data to Program Addr = Location to Program
Read	None	Status Register Data. Toggle CE# or OE# to Update Status Register Data
Idle	None	Check SR[7]: 1 = WSM Ready 0 = WSM Busy

Program Protection Register operation addresses must be within the Protection Register address space. Addresses outside this space will return an error.

Repeat for subsequent programming operations.

Full Status Register check can be done after each program, or after a sequence of program operations.

Write 0xFF after the last operation to set Read Array state.

FULL STATUS CHECK PROCEDURE

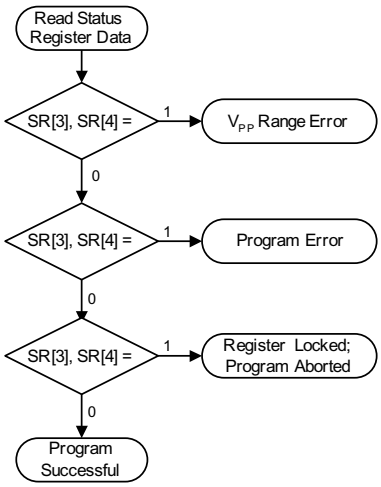

Bus Operation	Command	Comments
Idle	None	Check SR[1], SR[3], SR[4]: 0,1,1 = V_{PP} Range Error
Idle	None	Check SR[1], SR[3], SR[4]: 0,0,1 = Programming Error
Idle	None	Check SR[1], SR[3], SR[4]: 1,0,1 = Block locked; operation aborted

SR[3] must be cleared before the Write State Machine will allow further program attempts.

Only the Clear Staus Register command clears SR[1, 3, 4].

If an error is detected, clear the Status register before attempting a program retry or other error recovery.

Appendix C Common Flash Interface

This appendix defines the data structure or "database" returned by the Common Flash Interface (CFI) Query command. System software should parse this structure to gain critical information such as block size, density, x8/x16, and electrical specifications. Once this information has been obtained, the software will know which command sets to use to enable flash writes, block erases, and otherwise control the flash component. The Query is part of an overall specification for multiple command set and control interface descriptions called Common Flash Interface, or CFI.

C.1 Query Structure Output

The Query database allows system software to obtain information for controlling the flash device. This section describes the device's CFI-compliant interface that allows access to Query data.

Query data are presented on the lowest-order data outputs (DQ0-DQ7) only. The numerical offset value is the address relative to the maximum bus width supported by the device. On this family of devices, the Query table device starting address is a 0x10, which is a word address for x16 devices.

For a word-wide (x16) device, the first two Query-structure bytes, ASCII "Q" and "R," appear on the low byte at word addresses 0x10 and 0x11. This CFI-compliant device outputs 0x00 data on upper bytes. The device outputs ASCII "Q" in the low byte (DQ0-DQ7) and 0x00 in the high byte (DQ8-DQ15).

At Query addresses containing two or more bytes of information, the least significant data byte is presented at the lower address, and the most significant data byte is presented at the higher address.

In all of the following tables, addresses and data are represented in hexadecimal notation, so the "h" suffix has been dropped. In addition, since the upper byte of word-wide devices is always "0x00," the leading "00" has been dropped from the table notation and only the lower byte value is shown. Any x16 device outputs can be assumed to have 0x00 on the upper byte in this mode.

Table 24. Summary of Query Structure Output as a Function of Device and Mode

Device	Hex Offset	Hex Code	ASCII Value
Device Addresses	00010:	51	"Q"
	00011:	52	"R"
	00012:	59	"Y"

Table 25. Example of Query Structure Output of x16 Devices (Sheet 1 of 2)

Word Addressing:		
Offset	Hex Code	Value
A[X-0]	DQ[16:0]	
0x00010	0051	"Q"
0x00011	0052	"R"
0x00012	0059	"Y"
0x00013	P_IDLO	PrVendor

Table 25. Example of Query Structure Output of x16 Devices (Sheet 2 of 2)

0x00014	P_IDHI	ID #
0x00015	PLO	PrVendor
0x00016	PHI	TblAdr
0x00017	A_IDLO	AltVendor
0x00018	A_IDHI	ID #
...	...	...

C.2 Query Structure Overview

The Query command causes the flash component to display the Common Flash Interface (CFI) Query structure or "database." The structure sub-sections and address locations are summarized below.

Table 26. Query Structure

Offset	Sub-Section Name	Description[1]
0x00000		Manufacturer Code
0x00001		Device Code
0x(BA+2)[2]	Block Status register	Block-specific information
0x00004-0xF	Reserved	Reserved for vendor-specific information
0x00010	CFI query identification string	Command set ID and vendor data offset
0x0001B	System interface information	Device timing & voltage information
0x00027	Device geometry definition	Flash device layout
P[3]	Primary Intel-specific Extended Query Table	Vendor-defined additional information specific to the Primary Vendor Algorithm

NOTES:
1. Refer to the Query Structure Output section and offset 0x28 for the detailed definition of offset address as a function of device bus width and mode.
2. BA = Block Address beginning location (i.e., 0x08000 is block 1's beginning location when the block size is 32K-word).
3. Offset 15 defines "P" which points to the Primary Intel-specific Extended Query Table.

C.3 Block Status Register

The Block Status Register indicates whether an erase operation completed successfully or whether a given block is locked or can be accessed for flash program/erase operations.

Block Erase Status (BSR[1]) allows system software to determine the success of the last block erase operation. BSR[1] can be used just after power-up to verify that the VCC supply was not accidentally removed during an erase operation.

Table 27. Block Status Register

Offset	Length	Description	Add.	Value
0x(BA+2)[1]	1	Block Lock Status Register	BA+2	--00 or --01
		BSR[0] Block lock status 0 = Unlocked 1 = Locked	BA+2	(bit 0): 0 or 1
		BSR[1] Block lock-down status 0 = Not locked down 1 = Locked down	BA+2	(bit 1): 0 or 1
		BSR[7:2]: *Reserved for future use*	BA+2	(bit 2-7): 0

NOTES:
1. BA = Block Address beginning location (i.e., 0x08000 is block 1's beginning location when the block size is 32K-word).

C.4 CFI Query Identification String

The Identification String provides verification that the component supports the Common Flash Interface specification. It also indicates the specification version and supported vendor-specified command set(s).

Table 28. CFI Identification

Offset	Length	Description	Add.	Hex Code	Value
0x10	3	Query-unique ASCII string "QRY"	10: 11: 12:	--51 --52 --59	"Q" "R" "Y"
0x13	2	Primary vendor command set and control interface ID code 16-bit ID code for vendor-specified algorithms	13: 14:	--03 --00	
0x15	2	Extended Query Table primary algorithm address	15: 16:	--35 --00	
0x17	2	Alternate vendor command set and control interface ID code 0x0000 means no second vendor-specified algorithm exists	17: 18:	--00 --00	
0x19	2	Secondary algorithm Extended Query Table address 0x0000 means none exists	19: 1A:	--00 --00	

Table 29. System Interface Information

Offset	Length	Description	Add.	Hex Code	Value
0x1B	1	V_{CC} logic supply minimum program/erase voltage bits 0–3 BCD 100 mV bits 4–7 BCD volts	1B:	--27	2.7 V
0x1C	1	V_{CC} logic supply maximum program/erase voltage bits 0–3 BCD 100 mV bits 4–7 BCD volts	1C:	--36	3.6 V
0x1D	1	V_{PP} [programming] supply minimum program/erase voltage bits 0–3 BCD 100 mV bits 4–7 HEX volts	1D:	--B4	11.4 V

Offset	Length	Description	Add.	Hex Code	Value
0x1E	1	V_{PP} [programming] supply maximum program/erase voltage bits 0–3 BCD 100 mV bits 4–7 HEX volts	1E:	--C6	12.6 V
0x1F	1	“n” such that typical single word program time-out =2^n µs	1F:	--05	32 µs
0x20	1	“n” such that typical max. buffer write time-out = 2^n µs	20:	--00	NA
0x21	1	“n” such that typical block erase time-out = 2^n ms	21:	--0A	1 s
0x22	1	“n” such that typical full chip erase time-out = 2^n ms	22:	--00	NA
0x23	1	“n” such that maximum word program time-out = 2^n times typical	23:	--04	512µs
0x24	1	“n” such that maximum buffer write time-out = 2^n times typical	24:	--00	NA
0x25	1	“n” such that maximum block erase time-out = 2^n times typical	25:	--03	8s
0x26	1	“n” such that maximum chip erase time-out = 2^n times typical	26:	--00	NA

C.5 Device Geometry Definition

Table 30. Device Geometry Definition

Offset	Length	Description	Add.	Hex Code	Value
0x27	1	“n” such that device size = 2^n in number of bytes	27	See Table 31	
0x28	2	Flash device interface: x8 async 28:00,29:00; x16 async 28:01,29:00; x8/x16 async 28:02,29:00	28: 29:	--01 --00	x16
0x2A	2	“n” such that maximum number of bytes in write buffer = 2^n	2A: 2B:	--00 --00	0
0x2C	1	Number of erase block regions within device: 1. x = 0 means no erase blocking; the device erases in “bulk” 2. x specifies the number of device or partition regions with one or more contiguous same-size erase blocks. 3. Symmetrically blocked partitions have one blocking region 4. Partition size = (total blocks) x (individual block size)	2C:	--02	2
0x2D	4	Erase Block Region 1 Information bits 0–15 = y, y+1 = number of identical-size erase blocks bits 16–31 = z, region erase block(s) size are z x 256 bytes	2D: 2E: 2F: 30:	See Table 31	
0x2D	14	Erase Block Region 2 Information bits 0–15 = y, y+1 = number of identical-size erase blocks bits 16–31 = z, region erase block(s) size are z x 256 bytes	31: 32: 33: 34:	See Table 31	

Table 31. Device Geometry Details

Address	16 Mbit		32 Mbit		64 Mbit	
	-B	-T	-B	-T	-B	-T
0x27	--15	-15	--16	-16	--17	--17
0x28	--01	--01	--01	--01	--01	--01
0x29	--00	--00	--00	-00	-00	-00
0x2A	--00	--00	--00	-00	-00	-00
0x2B	--00	--00	--00	-00	-00	-00
0x2C	--02	--02	--02	--02	--02	--02
0x2D	--07	--1E	--07	--3E	--07	--7E
0x2E	--00	--00	--00	-00	-00	-00
0x2F	--20	--00	--20	-00	--20	--00
0x30	--00	--01	--00	--01	--00	--01
0x31	--1E	--07	--3E	--07	--7E	--07
0x32	--00	--00	--00	-00	-00	-00
0x33	--00	--20	--00	--20	--00	--20
0x34	--01	--00	--01	--00	--01	--00

C.6 Intel-Specific Extended Query Table

Certain flash features and commands are optional. The Intel-Specific Extended Query table specifies this and other similar types of information.

Table 32. Primary-Vendor Specific Extended Query (Sheet 1 of 2)

Offset[1] P = 0x15	Length	Description (Optional Flash Features and Commands)	Address	Hex Code	Value
0x(P+0) 0x(P+1) 0x(P+2)	3	Primary extended query table Unique ASCII string “PRI”	35: 36: 37:	--50 --52 --49	“P” “R” “I”
0x(P+3)	1	Major version number, ASCII	38:	--31	“1”
0x(P+4)	1	Minor version number, ASCII	39:	--30	“0”
0x(P+5) 0x(P+6) 0x(P+7) 0x(P+8)	4	Optional feature and command support (1=yes, 0=no) bits 9–31 are reserved; undefined bits are “0.” If bit 31 is “1” then another 31 bit field of optional features follows at the end of the bit-30 field.	3A: 3B: 3C: 3D:	--66 --00 --00 --00	
		bit 0 Chip erase supported bit 1 Suspend erase supported bit 2 Suspend program supported bit 3 Legacy lock/unlock supported bit 4 Queued erase supported bit 5 Instant individual block locking supported bit 6 Protection bits supported bit 7 Page mode read supported bit 8 Synchronous read supported	bit 0 = 0 bit 1 = 1 bit 2 = 1 bit 3 = 0 bit 4 = 0 bit 5 = 1 bit 6 = 1 bit 7 = 0 bit 8 = 0		No Yes Yes No No Yes Yes No No

Table 32. Primary-Vendor Specific Extended Query (Sheet 2 of 2)

Offset[1] P = 0x15	Length	Description (Optional Flash Features and Commands)	Address	Hex Code	Value
0x(P+9)	1	Supported functions after suspend: Read Array, Status, Query Other supported operations are: *bits 1–7 reserved; undefined bits are "0"*	3E:	--01	
		bit 0 Program supported after erase suspend	bit 0 = 1		Yes
0x(P+A) 0x(P+B)	2	Block status register mask bits 2–15 are Reserved; undefined bits are "0" bit 0 Block Lock-Bit Status Register active bit 1 Block Lock-Down Bit Status active	3F: 40:	--03 --00	
			bit 0 = 1 bit 1 = 1		Yes Yes
0x(P+C)	1	V_{CC} logic supply highest performance program/ erase voltage bits 0–3 BCD value in 100 mV bits 4–7 BCD value in volts	41:	--33	3.3 V
0x(P+D)	1	V_{PP} optimum program/erase supply voltage bits 0–3 BCD value in 100 mV bits 4–7 HEX value in volts	42:	--C0	12.0 V

NOTES:
1. The variable P is a pointer which is defined at CFI offset 0x15.

Table 33. Protection Register Information

Offset[1] P = 0x35	Length	Description (Optional Flash Features and Commands)	Address	Hex Code	Value
0x(P+E)	1	Number of Protection register fields in JEDEC ID space. "00h," indicates that 256 protection bytes are available	43:	--01	01
0x(P+F) 0x(P+10) (0xP+11) 0x(P+12)	4	Protection Field 1: Protection Description This field describes user-available One Time Programmable (OTP) Protection register bytes. Some are pre-programmed with device-unique serial numbers. Others are user programmable. Bits 0–15 point to the Protection register Lock byte, the section's first byte. The following bytes are factory pre-programmed and user-programmable. bits 0–7 = Lock/bytes JEDEC-plane physical low address bits 8–15 = Lock/bytes JEDEC -plane physical high address bits 16–23 = "n" such that 2^n = factory pre-programmed bytes bits 24–31 = "n" such that 2^n = user programmable bytes	44: 45: 46: 47:	--80 --00 --03 --03	80h 00h 8 byte 8 byte
0x(P+13)		Reserved for future use	48:		

NOTES:
1. The variable P is a pointer which is defined at CFI offset 0x15.

Appendix D Mechanical Specifications

Figure 19. µBGA* and VF BGA Package Drawing & Dimensions

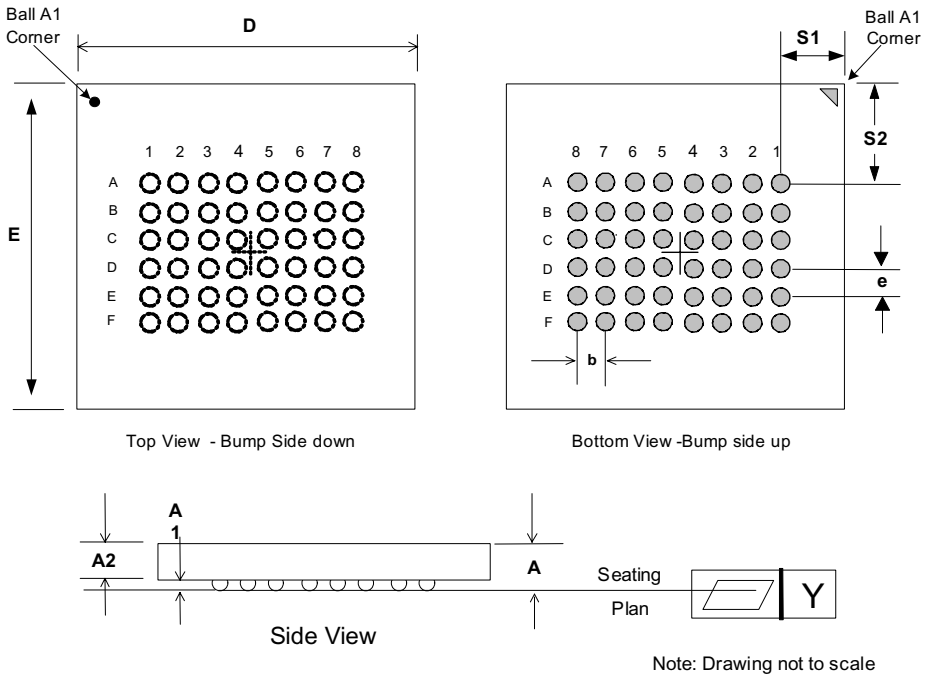

		Millimeters			Inches		
Dimensions	**Symbol**	**Min**	**Nom**	**Max**	**Min**	**Nom**	**Max**
Package Height	A			1.000			0.0394
Ball Height	A1	0.150			0.0059		
Package Body Thickness	A2		0.665			0.0262	
Ball (Lead) Width	b	0.325	0.375	0.425	0.0128	0.0148	0.0167
Package Body Length 8M (.25)	D	7.810	7.910	8.010			
Package Body Length 16M (.25/.18/.13) 32M (.25/.18/.13)	D	7.186	7.286	7.386	0.2829	0.2868	0.2908
Package Body Length 64M (.18)	D	7.600	7.700	7.800	0.2992	0.3031	0.3071
Package Body Width 8M (.25)	E	6.400	6.500	6.600	0.2520	0.2559	0.2598
Package Body Width 16M (.25/.18/.13) 32M (.18/.13)	E	6.864	6.964	7.064	0.2702	0.2742	0.2781
Package Body Width 32M (.25)	E	10.750	10.850	10.860	0.4232	0.4272	0.4276
Package Body Width 64M (.18)	E	8.900	9.000	9.100	0.3504	0.3543	0.3583
Pitch	e		0.750			0.0295	
Ball (Lead) Count 8M, 16M	N		46			46	
Ball (Lead) Count 32M	N		47			47	
Ball (Lead) Count 64M	N		48			48	
Seating Plane Coplanarity	Y			0.100			0.0039
Corner to Ball A1 Distance Along D 8M (.25)	S1	1.230	1.330	1.430	0.0484	0.0524	0.0563
Corner to Ball A1 Distance Along D 16M (.25/.18/.13) 32M (.18/.13)	S1	0.918	1.018	1.118	0.0361	0.0401	0.0440
Corner to Ball A1 Distance Along D 64M (.18)	S1	1.125	1.225	1.325	0.0443	0.0482	0.0522
Corner to Ball A1 Distance Along E 8M (.25)	S2	1.275	1.375	1.475	0.0502	0.0541	0.0581
Corner to Ball A1 Distance Along E 16M (.25/.18/.13) 32M (.18/.13)	S2	1.507	1.607	1.707	0.0593	0.0633	0.0672
Corner to Ball A1 Distance Along E 32M (.25)	S2	3.450	3.550	3.650	0.1358	0.1398	0.1437
Corner to Ball A1 Distance Along E 64M (.18)	S2	2.525	2.625	2.725	0.0994	0.1033	0.1073

Figure 20. TSOP Package Drawing & Dimensions

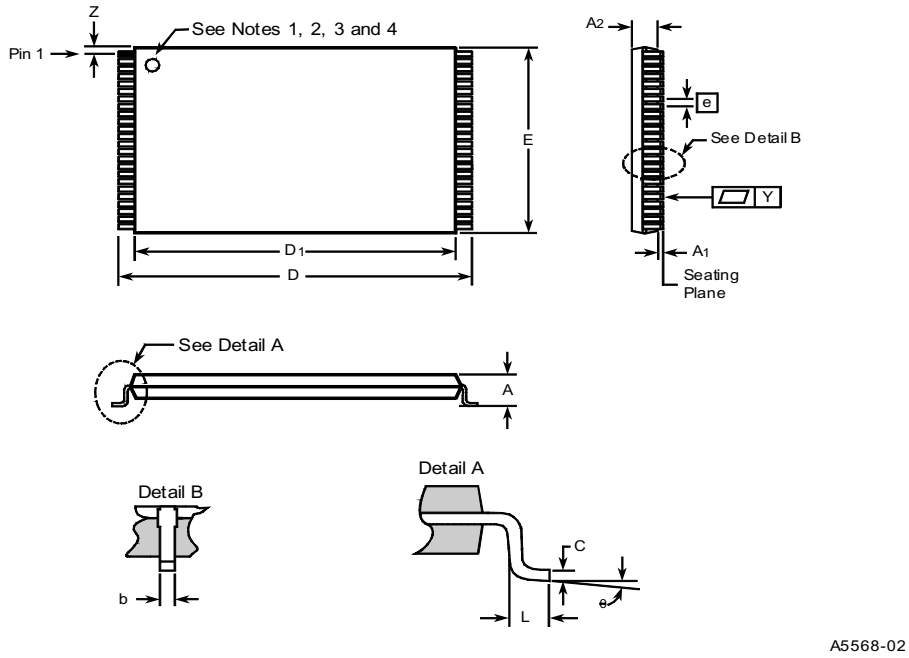

Dimensions

Family: Thin Small Outline Package									
	Symbol	Millimeters				Inches			
		Min	Nom	Max	Notes	Min	Nom	Max	Notes
Package Height	A			1.200				0.047	
Standoff	A1	0.050				0.002			
Package Body Thickness	A2	0.950	1.000	1.050		0.037	0.039	0.041	
Lead Width	b	0.150	0.200	0.300		0.006	0.008	0.012	
Lead Thickness	c	0.100	0.150	0.200		0.004	0.006	0.008	
Plastic Body Length	D1	18.200	18.400	18.600		0.717	0.724	0.732	
Package Body Width	E	11.800	12.000	12.200		0.465	0.472	0.480	
Lead Pitch	e		0.500				0.0197		
Terminal Dimension	D	19.800	20.000	20.200		0.780	0.787	0.795	
Lead Tip Length	L	0.500	0.600	0.700		0.020	0.024	0.028	
Lead Count	N		48				48		
Lead Tip Angle	Ø	0°	3°	5°		0°	3°	5°	
Seating Plane Coplanarity	Y			0.100				0.004	
Lead to Package Offset	Z	0.150	0.250	0.350		0.006	0.010	0.014	

1. One dimple on package denotes Pin 1.
2. If two dimples, then the larger dimple denotes Pin 1.
3. Pin 1 will always be in the upper left corner of the package, in reference to the product mark.
4. Pin 1 will always supersede above pin one notes.

Figure 21. Easy BGA Package Drawing & Dimension

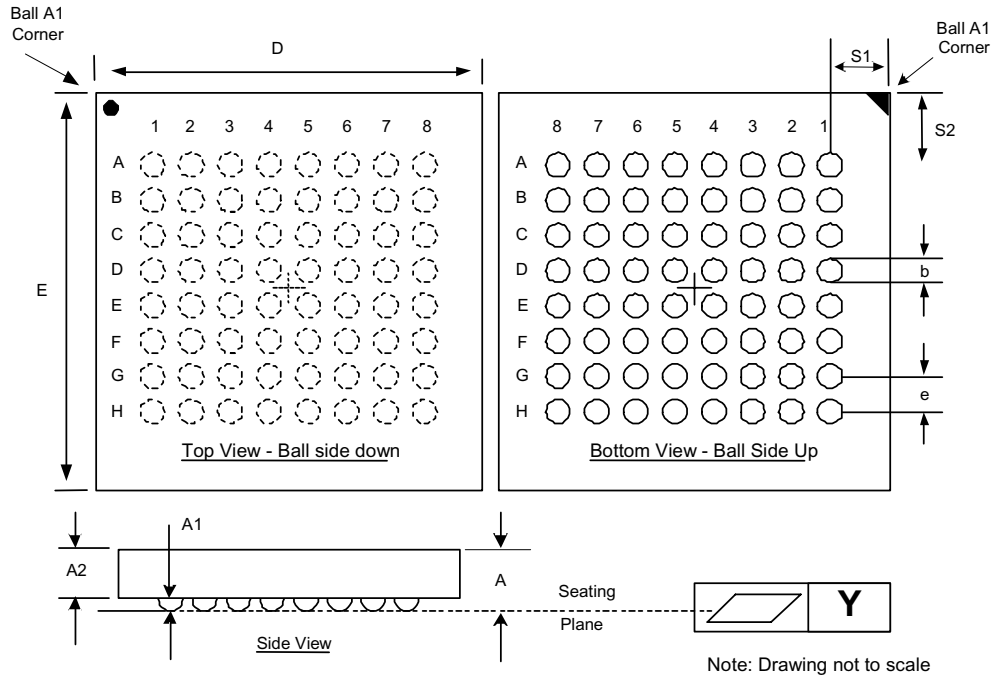

Dimensions Table

		Millimeters				Inches		
	Symbol	Min	Nom	Max	Notes	Min	Nom	Max
Package Height	A			1.200				0.0472
Ball Height	A1	0.250				0.0098		
Package Body Thickness	A2		0.780				0.0307	
Ball (Lead) Width	b	0.330	0.430	0.530		0.0130	0.0169	0.0209
Package Body Width	D	9.900	10.000	10.100	1	0.3898	0.3937	0.3976
Package Body Length	E	12.900	13.000	13.100	1	0.5079	0.5118	0.5157
Pitch	[e]		1.000				0.0394	
Ball (Lead) Count	N		64				64	
Seating Plane Coplanarity	Y			0.100				0.0039
Corner to Ball A1 Distance Along D	S1	1.400	1.500	1.600	1	0.0551	0.0591	0.0630
Corner to Ball A1 Distance Along E	S2	2.900	3.000	3.100	1	0.1142	0.1181	0.1220

Note: (1) Package dimensions are for reference only. These dimensions are estimates based on die size, and are subject to change.

Appendix E Additional Information

Order Number	Document/Tool
297938	*3 Volt Advanced+ Boot Block Flash Memory Specification Update*
292216	*AP-658 Designing for Upgrade to the Advanced+ Boot Block Flash Memory*
292215	*AP-657 Designing with the Advanced+ Boot Block Flash Memory Architecture*
Contact your Intel Representative	*Intel® Flash Data Integrator (FDI) Software Developer's Kit*
297874	*IFDI Interactive: Play with Intel® Flash Data Integrator on Your PC*

NOTES:
1. Please call the Intel Literature Center at (800) 548-4725 to request Intel documentation. International customers should contact their local Intel or distribution sales office.
2. Visit Intel's World Wide Web home page at 'http://www.intel.com/design/flash' for technical documentation and tools.

Appendix F Ordering Information

Figure 22. Component Ordering Information

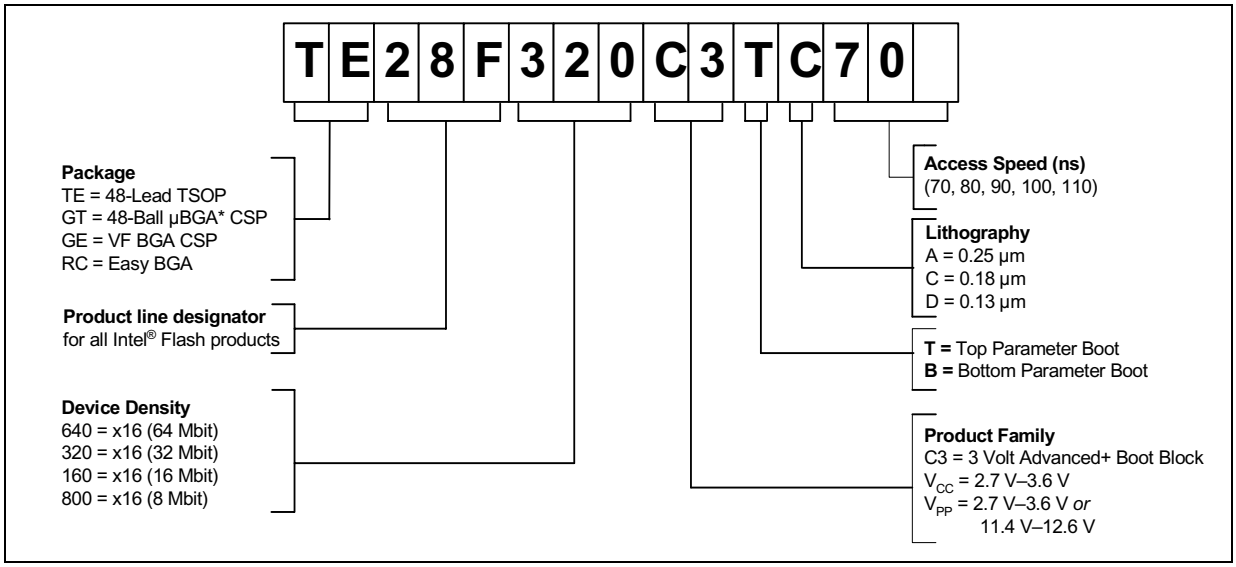

VALID COMBINATIONS (All Extended Temperature)				
	48-Lead TSOP	**48-Ball µBGA* CSP**	**48-Ball VF BGA**	**Easy BGA**
Extended 64 Mbit	TE28F640C3TC80 TE28F640C3BC80		GE28F640C3TC80 GE28F640C3BC80	RC28F640C3TC80 RC28F640C3BC80
Extended 32 Mbit	TE28F320C3TD70 TE28F320C3BD70 TE28F320C3TC70 TE28F320C3BC70 TE28F320C3TC90 TE28F320C3BC90 TE28F320C3TA100 TE28F320C3BA100 TE28F320C3TA110 TE28F320C3BA110	GT28F320C3TA100 GT28F320C3BA100 GT28F320C3TA110 GT28F320C3BA110	GE28F320C3TD70 GE28F320C3BD70 GE28F320C3TC70 GE28F320C3BC70 GE28F320C3TC90 GE28F320C3BC90	RC28F320C3TD70 RC28F320C3BD70 RC28F320C3TD90 RC28F320C3BD90 RC28F320C3TC90 RC28F320C3BC90 RC28F320C3TA100 RC28F320C3BA100 RC28F320C3TA110 RC28F320C3BA110
Extended 16 Mbit	TE28F160C3TD70 TE28F160C3BD70 TE28F160C3TC70 TE28F160C3BC70 TE28F160C3TC80 TE28F160C3BC80 TE28F160C3TC90 TE28F160C3BC90 TE28F160C3TA90 TE28F160C3BA90 TE28F160C3TA110 TE28F160C3BA110	GT28F160C3TA90 GT28F160C3BA90 GT28F160C3TA110 GT28F160C3BA110	GE28F160C3TD70 GE28F160C3BD70 GE28F160C3TC70 GE28F160C3BC70 GE28F160C3TC80 GE28F160C3BC80 GE28F160C3TC90 GE28F160C3BC90	RC28F160C3TD70 RC28F160C3BD70 RC28F160C3TC70 RC28F160C3BC70 RC28F160C3TC80 RC28F160C3BC80 RC28F160C3TC90 RC28F160C3BC90 RC28F160C3TA90 RC28F160C3BA90 RC28F160C3TA110 RC28F160C3BA110
Extended 8 Mbit	TE28F800C3TA90 TE28F800C3BA90 TE28F800C3TA110 TE28F800C3BA110		GE28F800C3TA70 GE28F800C3BA70 GE28F800C3TA90 GE28F800C3BA90	RC28F800C3TA90 RC28F800C3BA90 RC28F800C3TA110 RC28F800C3BA110

NOTE: The second line of the 48-ball µBGA package top side mark specifies assembly codes. For samples only, the first character signifies either “E” for engineering samples or “S” for silicon daisy chain samples. All other assembly codes without an “E” or “S” as the first character are production units.

Looking for pricing, stock, or lifecycle information?

Click below to explore more details on WIN SOURCE:

- View JS28F160C3BD70 on WIN SOURCE
- Micron Technology Inc. Information

Optimize Your Supply Chain with WIN SOURCE Solutions

- Global Sourcing Solution
- Obsolete Management
- Cost Control Management
- Shortage Management
- Alternative Solution
- Excess Inventory Management