IWR6843, IWR6443 Single-Chip 60 to 64GHz mmWave Sensor

1 Features

- FMCW transceiver
  - Integrated PLL, transmitter, receiver, Baseband, and ADC
  - 60 to 64GHz coverage with 4GHz continuous bandwidth
  - Four receive channels
  - Three transmit channels
  - Supports 6-bit phase shifter for TX Beam forming
  - Ultra-accurate chirp engine based on fractional-N PLL
  - TX power: 12dBm
  - RX noise figure:
    - 12dB
  - Phase noise at 1MHz:
    - –93dBc/Hz
- Built-in calibration and self-test
  - Arm® Cortex®-R4F-based radio control system
  - Built-in firmware (ROM)
  - Self-calibrating system across process and temperature
  - Embedded self-monitoring with no host processor involvement on Functional Safety-Compliant devices
- C674x DSP for advanced signal processing (IWR6843 only)
- Hardware accelerator for FFT, filtering, and CFAR processing
- Memory compression
- Arm-R4F microcontroller for object detection, and interface control
  - Supports autonomous mode (loading user application from QSPI flash memory)
- Internal memory with ECC
  - IWR6843: 1.75MB, divided into MSS program RAM (512KB), MSS data RAM (192KB), DSP L1 RAM (64KB) and L2 RAM (256KB), and L3 radar data cube RAM (768KB)
  - IWR6443: 1.4MB, divided into MSS program RAM (512KB), MSS data RAM (192KB), and L3 radar data cube RAM (768KB)
  - Technical reference manual includes allowed size modifications
- Other interfaces available to user application
  - Up to 6 ADC channels (low sample rate monitoring)
  - Up to 2 SPI ports
  - Up to 2 UARTs
  - 1 CAN-FD interface
  - I2C
  - GPIOs
  - 2 lane LVDS interface for raw ADC data and debug instrumentation
- Functional Safety-Compliant
  - Developed for functional safety applications
  - Documentation available to aid IEC 61508 functional safety system design up to SIL 3
  - Hardware integrity up to SIL-2
  - Safety-related certification
    - IEC 61508 certified upto SIL 2 by TUV SUD
- Non-Functional safety variants also available
- Power management
  - Built-in LDO network for enhanced PSRR
  - I/Os support dual voltage 3.3V/1.8V
- Clock source
  - 40.0MHz crystal with internal oscillator
  - Supports external oscillator at 40MHz
  - Supports externally driven clock (square/sine) at 40MHz
- Easy hardware design
  - 0.65mm pitch, 161-pin 10.4mm × 10.4mm flip chip BGA package for easy assembly and low-cost PCB design
  - Small solution size
- Operating conditions
  - Junction temp range: –40°C to 105°C

An IMPORTANT NOTICE at the end of this data sheet addresses availability, warranty, changes, use in safety-critical applications, intellectual property matters and other important disclaimers. PRODUCTION DATA.

2 Applications

- Industrial sensor for measuring range, velocity, and angle
- Building automation
- Displacement sensing
- Gesture recognition
- Robotics
- Traffic monitoring
- Level Sensing
- Security and surveillance
- Factory automation safety guards
- Occupancy detection / people tracking / people counting
- Automated door & gate
- Motion detection

3 Description

The IWR6x43 device is an integrated single chip mmWave sensor based on FMCW radar technology capable of operation in the 60GHz to 64GHz band. It is built with TI's low power 45nm RFCMOS process and enables unprecedented levels of integration in an extremely small form factor. This device is an ideal solution for low power, self-monitored, ultra-accurate radar systems in the industrial space. Multiple variants are currently available including Functional Safety-Compliant devices and non-functional safety devices.

Device Information

PART NUMBER(2)	PACKAGE(1)	BODY SIZE	TRAY / TAPE AND REEL
IWR6843AQGABL	ABL (FCBGA, 161)	10.4mm × 10.4mm	Tray
IWR6843AQGABLR	ABL (FCBGA, 161)	10.4mm × 10.4mm	Tape and Reel
IWR6843AQSABL	ABL (FCBGA, 161)	10.4mm × 10.4mm	Tray
IWR6843AQSABLR	ABL (FCBGA, 161)	10.4mm × 10.4mm	Tape and Reel
IWR6843ABGABL	ABL (FCBGA, 161)	10.4mm × 10.4mm	Tray
IWR6843ABGABLR	ABL (FCBGA, 161)	10.4mm × 10.4mm	Tape and Reel
IWR6843ABSABL	ABL (FCBGA, 161)	10.4mm × 10.4mm	Tray
IWR6843ABSABLR	ABL (FCBGA, 161)	10.4mm × 10.4mm	Tape and Reel
IWR6443AQGABL	ABL (FCBGA, 161)	10.4mm × 10.4mm	Tray
IWR6443AQGABLR	ABL (FCBGA, 161)	10.4mm × 10.4mm	Tape and Reel

(1) For more information, see Section 13, *Mechanical, Packaging, and Orderable Information*.
(2) For more information, see Section 11.1, *Device Nomenclature*.

Copyright © 2025 Texas Instruments Incorporated

4 Functional Block Diagram

Figure 4-1 shows the functional block diagram of the device.

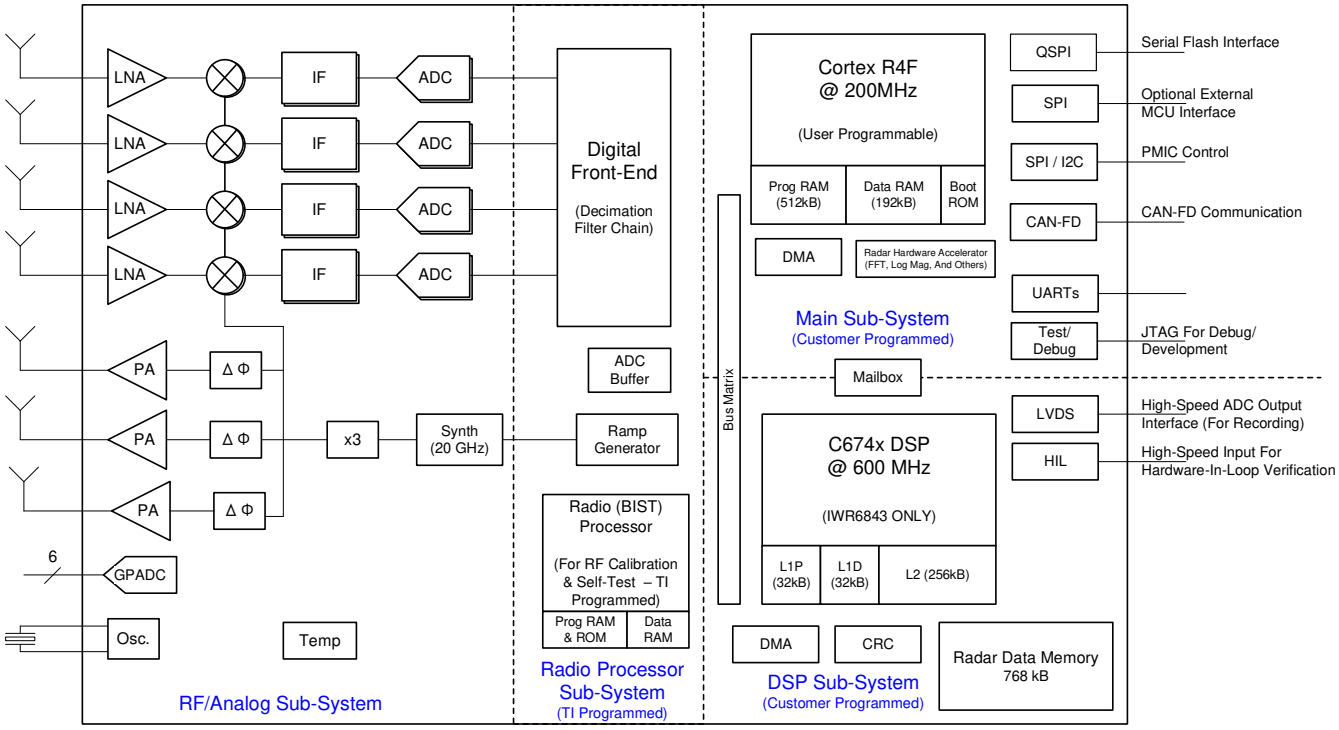

Figure 4-1. Functional Block Diagram

Table of Contents

1 Features....1
2 Applications....2
3 Description....2
4 Functional Block Diagram....3
5 Device Comparison....5
5.1 Related Products....7
6 Terminal Configuration and Functions....8
6.1 Pin Diagram....8
6.2 Signal Descriptions....13
6.3 Pin Attributes....18
7 Specifications....26
7.1 Absolute Maximum Ratings....26
7.2 ESD Ratings....26
7.3 Power-On Hours (POH)....27
7.4 Recommended Operating Conditions....27
7.5 VPP Specifications for One-Time Programmable (OTP) eFuses....28
7.6 Power Supply Specifications....29
7.7 Power Consumption Summary....30
7.8 Power Save Mode....30
7.9 RF Specification....32
7.10 CPU Specifications....33
7.11 Thermal Resistance Characteristics for FCBGA Package [ABL0161]....34
7.12 Timing and Switching Characteristics....34
8 Detailed Description....57
8.1 Overview....57
8.2 Functional Block Diagram....57
8.3 Subsystems....58
8.4 Other Subsystems....62
8.5 Boot Modes....63
9 Monitoring and Diagnostics....67
9.1 Monitoring and Diagnostic Mechanisms....67
10 Applications, Implementation, and Layout....72
10.1 Application Information....72
10.2 Reference Schematic....72
11 Device and Documentation Support....73
11.1 Device Nomenclature....73
11.2 Tools and Software....74
11.3 Documentation Support....74
11.4 Support Resources....74
11.5 Trademarks....75
11.6 Electrostatic Discharge Caution....75
11.7 Glossary....75
12 Revision History....76
13 Mechanical, Packaging, and Orderable Information....78
13.1 Packaging Information....78
13.2 Tray Information for ABL, 10.4 × 10.4 mm....82

Copyright © 2025 Texas Instruments Incorporated

5 Device Comparison

Unless otherwise noted, the device-specific information, in this document, relates to both the IWR6843 and IWR6443 devices. The device differences are highlighted in Table 5-1, *Device Features Comparison*.

Table 5-1. Device Features Comparison

FUNCTION	IWR6843AOP	IWR6843	IWR6443	IWR1843	IWR1642	IWR1443	IWRL6432AOP	IWRL6432	IWRL1432
Antenna on Package (AOP)	Yes	—	—	—	—	—	Yes	—	—
Number of receivers	4	4	4	4	4	4	3	3	3
Number of transmitters	3[(1)]	3[(1)]	3[(1)]	3[(1)]	2	3	2	2	2
RF frequency range	60 to 64 GHz	60 to 64 GHz	60 to 64 GHz	76 to 81 GHz	76 to 81 GHz	76 to 81 GHz	57 to 64GHz	57 to 64GHz	76 to 81 GHz
On-chip memory	1.75MB	1.75MB	1.4MB	2MB	1.5MB	576KB	1MB	1MB	1MB
Max I/F (Intermediate Frequency) (MHz)	10	10	10	10	5	15	5	5	5
Max real sampling rate (Msps)	25	25	25	25	12.5	37.5	12.5	12.5	12.5
Max complex sampling rate (Msps)	12.5	12.5	12.5	12.5	6.25	18.75	—	—	—
Functional Safety-Compliance	SIL-2[(4)]	SIL-2[(4)]	—	—	—	—	SIL-2 targeted[(4)]	SIL-2 [(4)]	SIL-2 [(4)]
Processors									
MCU	Yes	Yes	Yes	Yes	Yes	Yes	Yes	Yes	Yes
DSP (C674x)	Yes	Yes	—	Yes	Yes	—	—	—	—
Peripherals									
Serial Peripheral Interface (SPI) ports	2	2	2	2	2	1	2	2	2
Quad Serial Peripheral Interface (QSPI)	Yes	Yes	Yes	Yes	Yes	Yes	Yes	Yes	Yes
Inter-Integrated Circuit (I^2C) interface	1	1	1	1	1	1	1	1	1
Controller Area Network (DCAN) interface	—	—	—	Yes	Yes	Yes	—	—	—
Controller Area Network (CAN-FD) interface	Yes	Yes	Yes	Yes	—	—	Yes	Yes	Yes
Trace	Yes	Yes	Yes	Yes	Yes	—	—	—	—
PWM	Yes	Yes	Yes	Yes	Yes	—	Yes	Yes	Yes
Hardware In Loop (HIL/DMM)	Yes	Yes	Yes	Yes	Yes	—	—	—	—
GPADC	Yes	Yes	Yes	Yes	Yes	Yes	Yes	Yes	Yes
LVDS/Debug [(3)]	Yes	Yes	Yes	Yes	Yes	Yes	—	—	—
CSI2	—	—	—	—	—	Yes	—	—	—

Copyright © 2025 Texas Instruments Incorporated

Table 5-1. Device Features Comparison (continued)

FUNCTION		IWR6843AOP	IWR6843	IWR6443	IWR1843	IWR1642	IWR1443	IWRL6432AOP	IWRL6432	IWRL1432
Hardware accelerator		Yes	Yes	Yes	Yes	—	Yes	Yes	Yes	Yes
1-V bypass mode		Yes	Yes	Yes	Yes	Yes	Yes	N/A	N/A	N/A
JTAG		Yes	Yes	Yes	Yes	Yes	Yes	Yes	Yes	Yes
Number of Tx that can be simultaneously used		3	3	3	3	2	2	2	2	2
Product status	Product Preview (PP), Advance Information (AI), or Production Data (PD)	PD(2)	PD(2)	PD(2)	PD(2)	PD(2)	PD(2)	PD(2)	PD(2)	PD(2)

(1) 3 Tx Simultaneous operation is supported only with 1-V LDO bypass and PA LDO disable mode. In this mode, the 1-V supply needs to be fed on the VOUT PA pin.
(2) PRODUCTION DATA information is current as of publication date. Products conform to specifications per the terms of the Texas Instruments standard warranty.
(3) LVDS Interface is not a production Interface and is only used for debug.
(4) Non-Functional Safety Variants also available. As the certification may get secured at different times and post certificate the target would be updated to “compliant” from “compliance targeted” only in related datasheets, please refer to the respective datasheets for most recent compliance status.

Copyright © 2025 Texas Instruments Incorporated

5.1 Related Products

For information about other devices in this family of products or related products see the links that follow.

mmWave sensors	TI's mmWave sensors rapidly and accurately sense range, angle and velocity with less power using the smallest footprint mmWave sensor portfolio for industrial applications.
mmWave IWR	The Texas Instruments IWRxxxx family of mmWave Sensors are highly integrated and built on RFCMOS technology operating in 76- to 81-GHz or 60- to 64-GHz frequency band. The devices have a closed-loop PLL for precise and linear chirp synthesis, includes a built-in radio processor (BIST) for RF calibration and safety monitoring. The devices have a very small-form factor, low power consumption, and are highly accurate. Industrial applications from long range to ultra short range can be realized using these devices.
Companion products for IWR6843	Review products that are frequently purchased or used in conjunction with this product.
Reference designs for IWR6843	The IWR6843 TI Designs Reference Design Library is a robust reference design library spanning analog, embedded processor and connectivity. Created by TI experts to help you jump-start your system design, all TI Designs include schematic or block diagrams, BOMs, and design files to speed your time to market. Search and download designs at ti.com/tidesigns.

Copyright © 2025 Texas Instruments Incorporated

6 Terminal Configuration and Functions

6.1 Pin Diagram

Figure 6-1 shows the pin locations for the 161-pin FCBGA package. Figure 6-2, Figure 6-3, Figure 6-4, and Figure 6-5 show the same pins, but split into four quadrants.

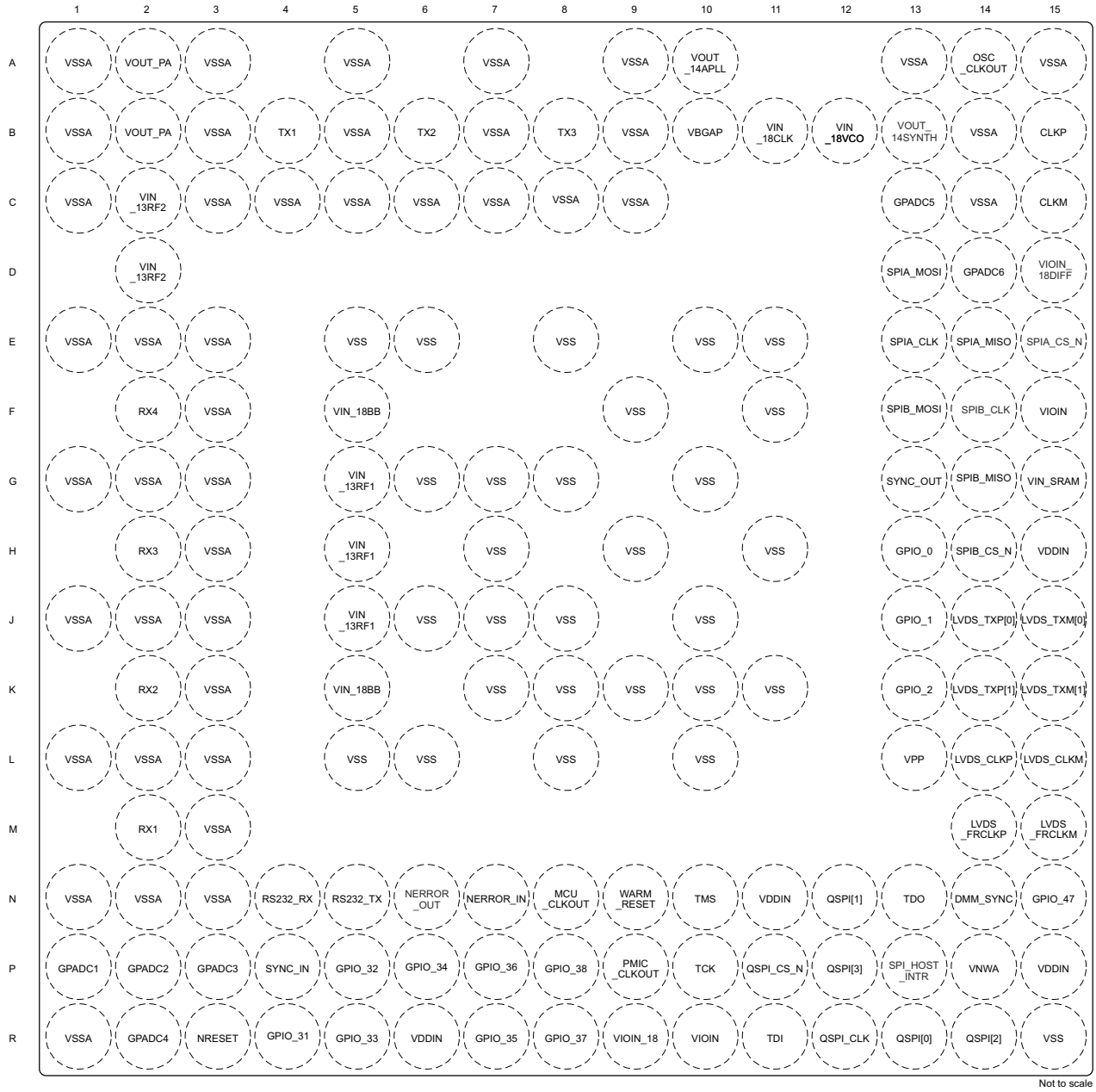

Figure 6-1. Pin Diagram

Copyright © 2025 Texas Instruments Incorporated

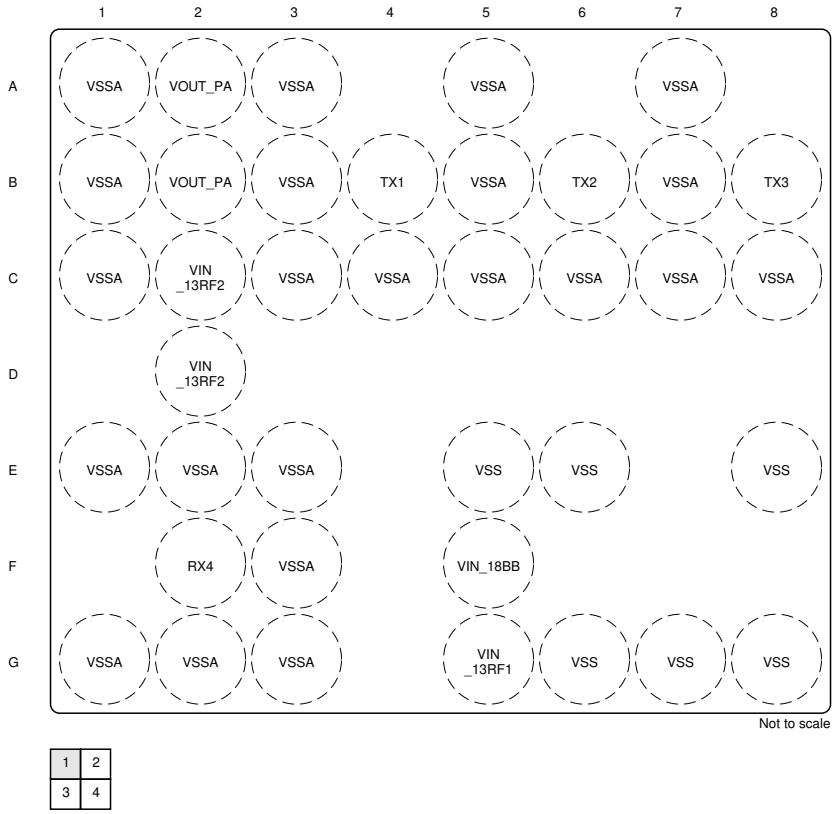

Figure 6-2. Top Left Quadrant

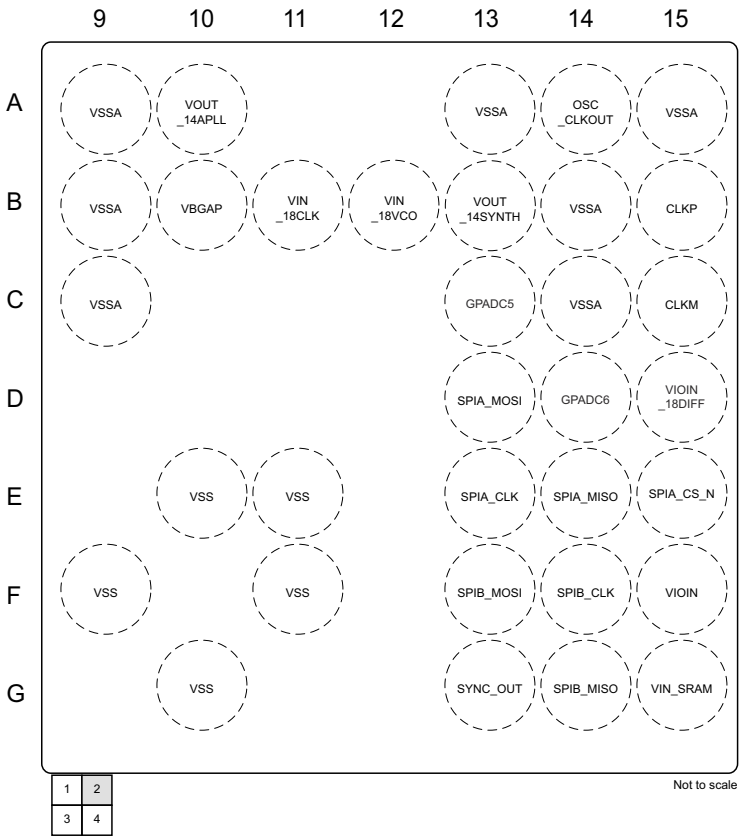

Figure 6-3. Top Right Quadrant

Copyright © 2025 Texas Instruments Incorporated

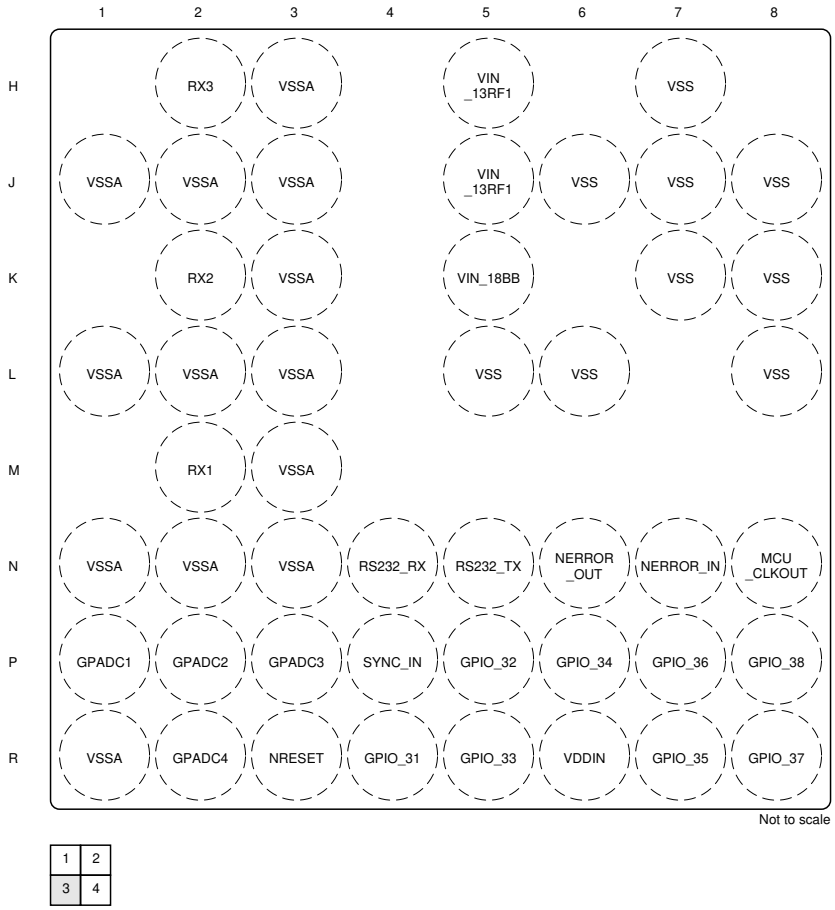

Figure 6-4. Bottom Left Quadrant

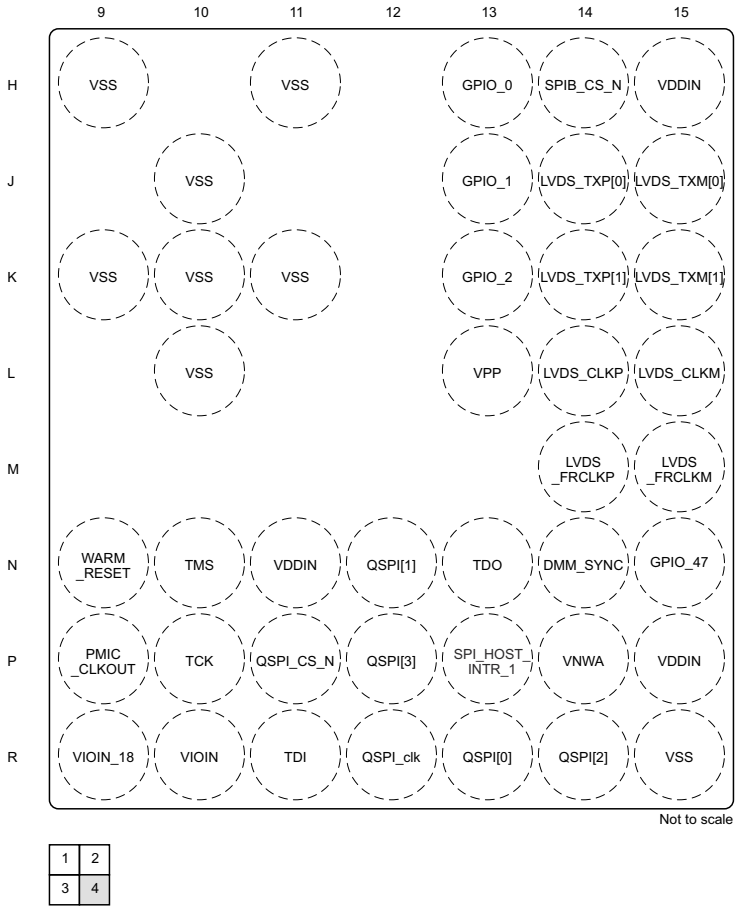

Figure 6-5. Bottom Right Quadrant

Copyright © 2025 Texas Instruments Incorporated

6.2 Signal Descriptions

Note

All digital IO pins of the device (except NERROR IN, NERROR_OUT, and WARM_RESET) are non-failsafe; hence, care needs to be taken that they are not driven externally without the VIO supply being present to the device.

Note

The GPIO state during the power supply ramp is not ensured. In case the GPIO is used in the application where the state of the GPIO is critical, even when NRESET is low, a tri-state buffer should be used to isolate the GPIO output from the radar device and a pull resister used to define the required state in the application. The NRESET signal to the radar device could be used to control the output enable (OE) of the tri-state buffer.

6.2.1 Signal Descriptions - Digital

SIGNAL NAME	PIN TYPE	DESCRIPTION	BALL NO.
BSS_UART_TX	O	Debug UART Transmit [Radar Block]	F14, H14, K13, N10, N13, N4, N5, R8
CAN_FD_RX	I	CAN FD (MCAN) Receive Signal	D13, F14, N10, N4, P12
CAN_FD_TX	O	CAN FD (MCAN) Transmit Signal	E14, H14, N5, P10, R14
DMM0	I	Debug Interface (Hardware In Loop) - Data Line	R4
DMM1	I	Debug Interface (Hardware In Loop) - Data Line	P5
DMM2	I	Debug Interface (Hardware In Loop) - Data Line	R5
DMM3	I	Debug Interface (Hardware In Loop) - Data Line	P6
DMM4	I	Debug Interface (Hardware In Loop) - Data Line	R7
DMM5	I	Debug Interface (Hardware In Loop) - Data Line	P7
DMM6	I	Debug Interface (Hardware In Loop) - Data Line	R8
DMM7	I	Debug Interface (Hardware In Loop) - Data Line	P8
DMM_CLK	I	Debug Interface (Hardware In Loop) - Clock	N15
DMM_MUX_IN	I	Debug Interface (Hardware In Loop) Mux Select between DMM1 and DMM2 (Two Instances)	G13, J13, P4
DMM_SYNC	I	Debug Interface (Hardware In Loop) - Sync	N14
DSS_UART_TX	O	Debug UART Transmit [DSP]	D13, E13, G14, P8, R12
EPWM1A	O	PWM Module 1 - Output A	N5, N8
EPWM1B	O	PWM Module 1 - Output B	H13, N5, P9
EPWM1SYNCI	I	PWM Module 1 - Sync Input	J13
EPWM2A	O	PWM Module 2- Output A	H13, N4, N5, P9
EPWM2B	O	PWM Module 2 - Output B	N4
EPWM2SYNCO	O	PWM Module 2 - Sync Output	R7
EPWM3A	O	PWM Module 3 - Output A	N4
EPWM3SYNCO	O	PWM Module 3 - Sync Output	P6
GPIO_0	IO	General-purpose I/O	H13
GPIO_1	IO	General-purpose I/O	J13
GPIO_2	IO	General-purpose I/O	K13
GPIO_3	IO	General-purpose I/O	E13
GPIO_4	IO	General-purpose I/O	H14
GPIO_5	IO	General-purpose I/O	F14
GPIO_6	IO	General-purpose I/O	P11

Copyright © 2025 Texas Instruments Incorporated

SIGNAL NAME	PIN TYPE	DESCRIPTION	BALL NO.
GPIO_7	IO	General-purpose I/O	R12
GPIO_8	IO	General-purpose I/O	R13
GPIO_9	IO	General-purpose I/O	N12
GPIO_10	IO	General-purpose I/O	R14
GPIO_11	IO	General-purpose I/O	P12
GPIO_12	IO	General-purpose I/O	P13
GPIO_13	IO	General-purpose I/O	H13
GPIO_14	IO	General-purpose I/O	N5
GPIO_15	IO	General-purpose I/O	N4
GPIO_16	IO	General-purpose I/O	J13
GPIO_17	IO	General-purpose I/O	P10
GPIO_18	IO	General-purpose I/O	N10
GPIO_19	IO	General-purpose I/O	D13
GPIO_20	IO	General-purpose I/O	E14
GPIO_21	IO	General-purpose I/O	F13
GPIO_22	IO	General-purpose I/O	G14
GPIO_23	IO	General-purpose I/O	R11
GPIO_24	IO	General-purpose I/O	N13
GPIO_25	IO	General-purpose I/O	N8
GPIO_26	IO	General-purpose I/O	K13
GPIO_27	IO	General-purpose I/O	P9
GPIO_28	IO	General-purpose I/O	P4
GPIO_29	IO	General-purpose I/O	G13
GPIO_30	IO	General-purpose I/O	C13
GPIO_31	IO	General-purpose I/O	R4
GPIO_32	IO	General-purpose I/O	P5
GPIO_33	IO	General-purpose I/O	R5
GPIO_34	IO	General-purpose I/O	P6
GPIO_35	IO	General-purpose I/O	R7
GPIO_36	IO	General-purpose I/O	P7
GPIO_37	IO	General-purpose I/O	R8
GPIO_38	IO	General-purpose I/O	P8
GPIO_47	IO	General-purpose I/O	N15
I2C_SCL	IO	I2C Clock	G14, N4
I2C_SDA	IO	I2C Data	F13, N5
LVDS_TXP[0]	O	Differential data Out – Lane 0	J14
LVDS_TXM[0]	O		J15
LVDS_TXP[1]	O	Differential data Out – Lane 1	K14
LVDS_TXM[1]	O		K15
LVDS_CLKP	O	Differential clock Out	L14
LVDS_CLKM	O		L15
LVDS_FRCLKP	O	Differential Frame Clock	M14
LVDS_FRCLKM	O		M15
MCU_CLKOUT	O	Programmable clock given out to external MCU or the processor	N8
MSS_UARTA_RX	I	Main Subsystem - UART A Receive	F14, N4, R11
MSS_UARTA_TX	O	Main Subsystem - UART A Transmit	H14, N13, N5, R4

Copyright © 2025 Texas Instruments Incorporated

SIGNAL NAME	PIN TYPE	DESCRIPTION	BALL NO.
MSS_UARTB_RX	IO	Main Subsystem - UART B Receive	N4, P4
MSS_UARTB_TX	O	Main Subsystem - UART B Transmit	F14, H14, K13, N13, N5, P10, P7
NDMM_EN	I	Debug Interface (Hardware In Loop) Enable - Active Low Signal	N13, N5
NERROR_IN	I	Failsafe input to the device. Nerror output from any other device can be concentrated in the error signaling monitor module inside the device and appropriate action can be taken by Firmware	N7
NERROR_OUT	O	Open drain fail safe output signal. Connected to PMIC/ Processor/MCU to indicate that some severe criticality fault has happened. Recovery would be through reset.	N6
PMIC_CLKOUT	O	Output Clock from IWR6843 device for PMIC	H13, K13, P9
QSPI[0]	IO	QSPI Data Line #0 (Used with Serial Data Flash)	R13
QSPI[1]	I	QSPI Data Line #1 (Used with Serial Data Flash)	N12
QSPI[2]	I	QSPI Data Line #2 (Used with Serial Data Flash)	R14
QSPI[3]	I	QSPI Data Line #3 (Used with Serial Data Flash)	P12
QSPI_CLK	O	QSPI Clock (Used with Serial Data Flash)	R12
QSPI_CLK_EXT	I	QSPI Clock (Used with Serial Data Flash)	H14
QSPI_CS_N	O	QSPI Chip Select (Used with Serial Data Flash)	P11
RS232_RX	I	Debug UART (Operates as Bus Main) - Receive Signal	N4
RS232_TX	O	Debug UART (Operates as Bus Main) - Transmit Signal	N5
SOP[0]	I	Sense On Power - Line#0	N13
SOP[1]	I	Sense On Power - Line#1	G13
SOP[2]	I	Sense On Power - Line#2	P9
SPIA_CLK	IO	SPI Channel A - Clock	E13
SPIA_CS_N	IO	SPI Channel A - Chip Select	E15
SPIA_MISO	IO	SPI Channel A - Main In Slave Out	E14
SPIA_MOSI	IO	SPI Channel A - Main Out Slave In	D13
SPIB_CLK	IO	SPI Channel B - Clock	F14, R12
SPIB_CS_N	IO	SPI Channel B Chip Select (Instance ID 0)	H14, P11
SPIB_CS_N_1	IO	SPI Channel B Chip Select (Instance ID 1)	G13, J13, P13
SPIB_CS_N_2	IO	SPI Channel B Chip Select (Instance ID 2)	G13, J13, N12
SPIB_MISO	IO	SPI Channel B - Main In Slave Out	G14, R13
SPIB_MOSI	IO	SPI Channel B - Main Out Slave In	F13, N12
SPI_HOST_INTR	O	Out of Band Interrupt to an external host communicating over SPI	P13
SYNC_IN	I	Low frequency Synchronization signal input	P4
SYNC_OUT	O	Low Frequency Synchronization Signal output	G13, J13, K13, P4
TCK	I	JTAG Test Clock	P10
TDI	I	JTAG Test Data Input	R11
TDO	O	JTAG Test Data Output	N13
TMS	I	JTAG Test Mode Signal	N10
TRACE_CLK	O	Debug Trace Output - Clock	N15
TRACE_CTL	O	Debug Trace Output - Control	N14
TRACE_DATA_0	O	Debug Trace Output - Data Line	R4
TRACE_DATA_1	O	Debug Trace Output - Data Line	P5
TRACE_DATA_2	O	Debug Trace Output - Data Line	R5
TRACE_DATA_3	O	Debug Trace Output - Data Line	P6
TRACE_DATA_4	O	Debug Trace Output - Data Line	R7
TRACE_DATA_5	O	Debug Trace Output - Data Line	P7

Copyright © 2025 Texas Instruments Incorporated

SIGNAL NAME	PIN TYPE	DESCRIPTION	BALL NO.
TRACE_DATA_6	O	Debug Trace Output - Data Line	R8
TRACE_DATA_7	O	Debug Trace Output - Data Line	P8
FRAME_START	O	Pulse signal indicating the start of each frame	N8, K13, P9
CHIRP_START	O	Pulse signal indicating the start of each chirp	N8, K13, P9
CHIRP_END	O	Pulse signal indicating the end of each chirp	N8, K13, P9
ADC_VALID	O	When high, indicating valid ADC samples	P13, H13
WARM_RESET	IO	Open drain fail safe warm reset signal. Can be driven from PMIC for diagnostic or can be used as status signal that the device is going through reset.	N9

6.2.2 Signal Descriptions - Analog

INTERFACE	SIGNAL NAME	PIN TYPE	DESCRIPTION	BALL NO.
Transmitters	TX1	O	Single ended transmitter1 o/p	B4
	TX2	O	Single ended transmitter2 o/p	B6
	TX3	O	Single ended transmitter3 o/p	B8
Receivers	RX1	I	Single ended receiver1 i/p	M2
	RX2	I	Single ended receiver2 i/p	K2
	RX3	I	Single ended receiver3 i/p	H2
	RX4	I	Single ended receiver4 i/p	F2
Reset	NRESET	I	Power on reset for chip. Active low	R3
Reference Oscillator	CLKP	I	In XTAL mode: Input for the reference crystal In External clock mode: Single ended input reference clock port	B15
	CLKM	I	In XTAL mode: : Feedback drive for the reference crystal In External clock mode: Connect this port to ground	C15
Reference clock	OSC_CLKOUT	O	Reference clock output from clocking subsystem after cleanup PLL (1.4V output voltage swing).	A14
Bandgap voltage	VBGAP	O	Device's Band Gap Reference Output	B10
Power supply	VDDIN	Power	1.2V digital power supply	H15, N11, P15, R6
	VIN_SRAM	Power	1.2V power rail for internal SRAM	G15
	VNWA	Power	1.2V power rail for SRAM array back bias	P14
	VIOIN	Power	I/O Supply (3.3V or 1.8V): All CMOS I/Os would operate on this supply	R10, F15
	VIOIN_18	Power	1.8V supply for CMOS IO	R9
	VIN_18CLK	Power	1.8V supply for clock module	B11
	VIOIN_18DIFF	Power	1.8V supply for LVDS port	D15
	VPP	Power	Voltage supply for fuse chain	L13

Copyright © 2025 Texas Instruments Incorporated

INTERFACE	SIGNAL NAME	PIN TYPE	DESCRIPTION	BALL NO.
Power supply	VIN_13RF1	Power	1.3V Analog and RF supply,VIN_13RF1 and VIN_13RF2 could be shorted on the board	G5, H5, J5
	VIN_13RF2	Power	1.3V Analog and RF supply	C2,D2
	VIN_18BB	Power	1.8V Analog base band power supply	K5, F5
	VIN_18VCO	Power	1.8V RF VCO supply	B12
	VSS	Ground	Digital ground	L5, L6, L8, L10, K7, K8, K9, K10, K11, J6, J7, J8, J10, H7, H9, H11, G6, G7, G8, G10, F9, F11, E5, E6, E8, E10, E11, R15
	VSSA	Ground	Analog ground	A1, A3, A5, A7, A9, A13, A15, B1, B3, B5, B7, B9, B14, C1, C3, C4, C5, C6, C7, C8, C9, C14, E1, E2, E3, F3, G1, G2, G3, H3, J1, J2, J3, K3, L1, L2, L3, M3, N1, N2, N3, R1
Internal LDO output/ inputs	VOUT_14APLL	O	Internal LDO output	A10
	VOUT_14SYNTH	O	Internal LDO output	B13
	VOUT_PA	IO	Internal LDO output. When internal PA LDO is used, this pin provides the output voltage of the LDO. When the internal PA LDO is bypassed, and disabled, the 1-V supply should be fed on this pin. This is mandatory in the 3TX simultaneous use case.	A2, B2
Test and Debug output for pre-production phase. Can be pinned out on production hardware for field debug	Analog Test1 / GPADC1	IO	Analog IO dedicated for ADC service	P1
	Analog Test2 / GPADC2	IO	Analog IO dedicated for ADC service	P2
	Analog Test3 / GPADC3	IO	Analog IO dedicated for ADC service	P3
	Analog Test4 / GPADC4	IO	Analog IO dedicated for ADC service	R2
	ANAMUX / GPADC5	IO	Analog IO dedicated for ADC service	C13
	VSENSE / GPADC6	IO	Analog IO dedicated for ADC service	D14

Copyright © 2025 Texas Instruments Incorporated

6.3 Pin Attributes

Table 6-1. Pin Attributes (ABL0161 Package)

BALL NUMBER [1]	BALL NAME [2]	SIGNAL NAME [3]	PINCNTL ADDRESS[4]	MODE [5] [9]	TYPE [6]	BALL RESET STATE [7]	PULL UP/DOWN TYPE [8]
H13	GPIO_0	GPIO_13	0xFFFFEA04	0	IO	Output Disabled	Pull Down
		GPIO_0		1	IO		
		PMIC_CLKOUT		2	O		
		EPWM1B		10	O		
		ePWM2A		11	O		
J13	GPIO_1	GPIO_16	0xFFFFEA08	0	IO	Output Disabled	Pull Down
		GPIO_1		1	IO		
		SYNC_OUT		2	O		
		DMM_MUX_IN		12	I		
		SPIB_CS_N_1		13	IO		
		SPIB_CS_N_2		14	IO		
		EPWM1SYNCI		15	I		
K13	GPIO_2	GPIO_26	0xFFFFEA64	0	IO	Output Disabled	Pull Down
		GPIO_2		1	IO		
		OSC_CLKOUT		2	O		
		MSS_UARTB_TX		7	O		
		BSS_UART_TX		8	O		
		SYNC_OUT		9	O		
		PMIC_CLKOUT		10	O		
		CHIRP_START		11	O		
		CHIRP_END		12	O		
		FRAME_START		13	O		
R4	GPIO_31	TRACE_DATA_0	0xFFFFEA7C	0	O	Output Disabled	Pull Down
		GPIO_31		1	IO		
		DMM0		2	I		
		MSS_UARTA_TX		4	IO		
P5	GPIO_32	TRACE_DATA_1	0xFFFFEA80	0	O	Output Disabled	Pull Down
		GPIO_32		1	IO		
		DMM1		2	I		
R5	GPIO_33	TRACE_DATA_2	0xFFFFEA84	0	O	Output Disabled	Pull Down
		GPIO_33		1	IO		
		DMM2		2	I		
P6	GPIO_34	TRACE_DATA_3	0xFFFFEA88	0	O	Output Disabled	Pull Down
		GPIO_34		1	IO		
		DMM3		2	I		
		EPWM3SYNCO		4	O		

Copyright © 2025 Texas Instruments Incorporated

Table 6-1. Pin Attributes (ABL0161 Package) (continued)

BALL NUMBER [1]	BALL NAME [2]	SIGNAL NAME [3]	PINCNTL ADDRESS[4]	MODE [5] [9]	TYPE [6]	BALL RESET STATE [7]	PULL UP/DOWN TYPE [8]
R7	GPIO_35	TRACE_DATA_4	0xFFFFEA8C	0	O	Output Disabled	Pull Down
		GPIO_35		1	IO		
		DMM4		2	I		
		EPWM2SYNCO		4	O		
P7	GPIO_36	TRACE_DATA_5	0xFFFFEA90	0	O	Output Disabled	Pull Down
		GPIO_36		1	IO		
		DMM5		2	I		
		MSS_UARTB_TX		5	O		
R8	GPIO_37	TRACE_DATA_6	0xFFFFEA94	0	O	Output Disabled	Pull Down
		GPIO_37		1	IO		
		DMM6		2	I		
		BSS_UART_TX		5	O		
P8	GPIO_38	TRACE_DATA_7	0xFFFFEA98	0	O	Output Disabled	Pull Down
		GPIO_38		1	IO		
		DMM7		2	I		
		DSS_UART_TX		5	O		
N15	GPIO_47	TRACE_CLK	0xFFFFEABC	0	O	Output Disabled	Pull Down
		GPIO_47		1	IO		
		DMM_CLK		2	I		
N14	DMM_SYNC	TRACE_CTL	0xFFFFEAC0	0	O	Output Disabled	Pull Down
		DMM_SYNC		2	I		
N8	MCU_CLKOUT	GPIO_25	0xFFFFEA60	0	IO	Output Disabled	Pull Down
		MCU_CLKOUT		1	O		
		CHIRP_START		2	O		
		CHIRP_END		6	O		
		FRAME_START		7	O		
		EPWM1A		12	O		
N7	NERROR_IN	NERROR_IN	0xFFFFEA44	0	I	Input	
N6	NERROR_OUT	NERROR_OUT	0xFFFFEA4C	0	O	Hi-Z (Open Drain)	
P9	PMIC_CLKOUT	SOP[2]	0xFFFFEA68	During Power Up	I	Output Disabled	Pull Down
		GPIO_27		0	IO		
		PMIC_CLKOUT		1	O		
		CHIRP_START		6	O		
		CHIRP_END		7	O		
		FRAME_START		8	O		
		EPWM1B		11	O		
		EPWM2A		12	O		

Copyright © 2025 Texas Instruments Incorporated

Table 6-1. Pin Attributes (ABL0161 Package) (continued)

BALL NUMBER [1]	BALL NAME [2]	SIGNAL NAME [3]	PINCNTL ADDRESS[4]	MODE [5] [9]	TYPE [6]	BALL RESET STATE [7]	PULL UP/DOWN TYPE [8]
R13	QSPI[0]	GPIO_8	0xFFFFEA2C	0	IO	Output Disabled	Pull Down
		QSPI[0]		1	IO		
		SPIB_MISO		2	IO		
N12	QSPI[1]	GPIO_9	0xFFFFEA30	0	IO	Output Disabled	Pull Down
		QSPI[1]		1	I		
		SPIB_MOSI		2	IO		
		SPIB_CS_N_2		8	IO		
R14	QSPI[2]	GPIO_10	0xFFFFEA34	0	IO	Output Disabled	Pull Down
		QSPI[2]		1	I		
		CAN_FD_TX		8	O		
P12	QSPI[3]	GPIO_11	0xFFFFEA38	0	IO	Output Disabled	Pull Down
		QSPI[3]		1	I		
		CAN_FD_RX		8	I		
R12	QSPI_CLK	GPIO_7	0xFFFFEA3C	0	IO	Output Disabled	Pull Down
		QSPI_CLK		1	O		
		SPIB_CLK		2	IO		
		DSS_UART_TX		6	O		
P11	QSPI_CS_N	GPIO_6	0xFFFFEA40	0	IO	Output Disabled	Pull Up
		QSPI_CS_N		1	O		
		SPIB_CS_N		2	IO		
N4	RS232_RX	GPIO_15	0xFFFFEA74	0	IO	Input Enabled	Pull Up
		RS232_RX		1	I		
		MSS_UARTA_RX		2	I		
		BSS_UART_TX		6	IO		
		MSS_UARTB_RX		7	IO		
		CAN_FD_RX		8	I		
		I2C_SCL		9	IO		
		EPWM2A		10	O		
		EPWM2B		11	O		
		EPWM3A		12	O		

Copyright © 2025 Texas Instruments Incorporated

Table 6-1. Pin Attributes (ABL0161 Package) (continued)

BALL NUMBER [1]	BALL NAME [2]	SIGNAL NAME [3]	PINCNTL ADDRESS[4]	MODE [5] [9]	TYPE [6]	BALL RESET STATE [7]	PULL UP/DOWN TYPE [8]
N5	RS232_TX	GPIO_14	0xFFFFEA78	0	IO	Output Enabled	
		RS232_TX		1	O		
		MSS_UARTA_TX		5	IO		
		MSS_UARTB_TX		6	IO		
		BSS_UART_TX		7	IO		
		CAN_FD_TX		10	O		
		I2C_SDA		11	IO		
		EPWM1A		12	O		
		EPWM1B		13	O		
		NDMM_EN		14	I		
		EPWM2A		15	O		
E13	SPIA_CLK	GPIO_3	0xFFFFEA14	0	IO	Output Disabled	Pull Up
		SPIA_CLK		1	IO		
		DSS_UART_TX		7	O		
E15	SPIA_CS_N	GPIO_30	0xFFFFEA18	0	IO	Output Disabled	Pull Up
		SPIA_CS_N		1	IO		
E14	SPIA_MISO	GPIO_20	0xFFFFEA10	0	IO	Output Disabled	Pull Up
		SPIA_MISO		1	IO		
		CAN_FD_TX		2	O		
D13	SPIA_MOSI	GPIO_19	0xFFFFEA0C	0	IO	Output Disabled	Pull Up
		SPIA_MOSI		1	IO		
		CAN_FD_RX		2	I		
		DSS_UART_TX		8	O		
F14	SPIB_CLK	GPIO_5	0xFFFFEA24	0	IO	Output Disabled	Pull Up
		SPIB_CLK		1	IO		
		MSS_UARTA_RX		2	I		
		MSS_UARTB_TX		6	O		
		BSS_UART_TX		7	O		
		CAN_FD_RX		8	I		
H14	SPIB_CS_N	GPIO_4	0xFFFFEA28	0	IO	Output Disabled	Pull Up
		SPIB_CS_N		1	IO		
		MSS_UARTA_TX		2	O		
		MSS_UARTB_TX		6	O		
		BSS_UART_TX		7	IO		
		QSPI_CLK_EXT		8	I		
		CAN_FD_TX		9	O		

Copyright © 2025 Texas Instruments Incorporated

Table 6-1. Pin Attributes (ABL0161 Package) (continued)

BALL NUMBER [1]	BALL NAME [2]	SIGNAL NAME [3]	PINCNTL ADDRESS[4]	MODE [5] [9]	TYPE [6]	BALL RESET STATE [7]	PULL UP/DOWN TYPE [8]
G14	SPIB_MISO	GPIO_22	0xFFFFEA20	0	IO	Output Disabled	Pull Up
		SPIB_MISO		1	IO		
		I2C_SCL		2	IO		
		DSS_UART_TX		6	O		
F13	SPIB_MOSI	GPIO_21	0xFFFFEA1C	0	IO	Output Disabled	Pull Up
		SPIB_MOSI		1	IO		
		I2C_SDA		2	IO		
P13	SPI_HOST_INTR	GPIO_12	0xFFFFEA00	0	IO	Output Disabled	Pull Down
		SPI_HOST_INTR		1	O		
		SPIB_CS_N_1		6	IO		
P4	SYNC_IN	GPIO_28	0xFFFFEA6C	0	IO	Output Disabled	Pull Down
		SYNC_IN		1	I		
		MSS_UARTB_RX		6	IO		
		DMM_MUX_IN		7	I		
		SYNC_OUT		9	O		
G13	SYNC_OUT	SOP[1]	0xFFFFEA70	During Power Up	I	Output Disabled	Pull Down
		GPIO_29		0	IO		
		SYNC_OUT		1	O		
		DMM_MUX_IN		9	I		
		SPIB_CS_N_1		10	IO		
		SPIB_CS_N_2		11	IO		
P10	TCK	GPIO_17	0xFFFFEA50	0	IO	Input Enabled	Pull Down
		TCK		1	I		
		MSS_UARTB_TX		2	O		
		CAN_FD_TX		8	O		
R11	TDI	GPIO_23	0xFFFFEA58	0	IO	Input Enabled	Pull Up
		TDI		1	I		
		MSS_UARTA_RX		2	I		
N13	TDO	SOP[0]	0xFFFFEA5C	During Power Up	I	Output Enabled	
		GPIO_24		0	IO		
		TDO		1	O		
		MSS_UARTA_TX		2	O		
		MSS_UARTB_TX		6	O		
		BSS_UART_TX		7	O		
		NDMM_EN		9	I		
N10	TMS	GPIO_18	0xFFFFEA54	0	IO	Input Enabled	Pull Down
		TMS		1	I		
		BSS_UART_TX		2	O		
		CAN_FD_RX		6	I		

Copyright © 2025 Texas Instruments Incorporated

Table 6-1. Pin Attributes (ABL0161 Package) (continued)

BALL NUMBER [1]	BALL NAME [2]	SIGNAL NAME [3]	PINCNTL ADDRESS[4]	MODE [5] [9]	TYPE [6]	BALL RESET STATE [7]	PULL UP/DOWN TYPE [8]
N9	WARM_RESET	WARM_RESET	0xFFFFEA48	0	IO	Hi-Z Input (Open Drain)	

The following list describes the table column headers:

1. **BALL NUMBER:** Ball numbers on the bottom side associated with each signal on the bottom.
2. **BALL NAME:** Mechanical name from package device (name is taken from muxmode 0).
3. **SIGNAL NAME:** Names of signals multiplexed on each ball (also notice that the name of the ball is the signal name in muxmode 0).
4. **PINCNTL ADDRESS:** MSS Address for PinMux Control
5. **MODE:** Multiplexing mode number: value written to PinMux Cntl register to select specific Signal name for this Ball number. Mode column has bit range value.
6. **TYPE:** Signal type and direction:
   - I = Input
   - O = Output
   - IO = Input or Output
7. **BALL RESET STATE:** The state of the terminal at power-on reset
8. **PULL UP/DOWN TYPE:** indicates the presence of an internal pullup or pulldown resistor. Pullup and pulldown resistors can be enabled or disabled via software.
   - Pull Up: Internal pullup
   - Pull Down: Internal pulldown
   - An empty box means No pull.
9. Pin Mux Control Value maps to lower 4 bits of register.

Copyright © 2025 Texas Instruments Incorporated

IO MUX registers are available in the MSS memory map and the respective mapping to device pins is as follows:

Table 6-2. PAD IO Control Registers

Default Pin/Ball Name	Package Ball /Pin (Address)	Pin Mux Config Register
SPI_HOST_INTR	P13	0xFFFFEA00
GPIO_0	H13	0xFFFFEA04
GPIO_1	J13	0xFFFFEA08
SPIA_MOSI	D13	0xFFFFEA0C
SPIA_MISO	E14	0xFFFFEA10
SPIA_CLK	E13	0xFFFFEA14
SPIA_CS_N	E15	0xFFFFEA18
SPIB_MOSI	F13	0xFFFFEA1C
SPIB_MISO	G14	0xFFFFEA20
SPIB_CLK	F14	0xFFFFEA24
SPIB_CS_N	H14	0xFFFFEA28
QSPI[0]	R13	0xFFFFEA2C
QSPI[1]	N12	0xFFFFEA30
QSPI[2]	R14	0xFFFFEA34
QSPI[3]	P12	0xFFFFEA38
QSPI_CLK	R12	0xFFFFEA3C
QSPI_CS_N	P11	0xFFFFEA40
NERROR_IN	N7	0xFFFFEA44
WARM_RESET	N9	0xFFFFEA48
NERROR_OUT	N6	0xFFFFEA4C
TCK	P10	0xFFFFEA50
TMS	N10	0xFFFFEA54
TDI	R11	0xFFFFEA58
TDO	N13	0xFFFFEA5C
MCU_CLKOUT	N8	0xFFFFEA60
GPIO_2	K13	0xFFFFEA64
PMIC_CLKOUT	P9	0xFFFFEA68
SYNC_IN	P4	0xFFFFEA6C
SYNC_OUT	G13	0xFFFFEA70
RS232_RX	N4	0xFFFFEA74
RS232_TX	N5	0xFFFFEA78

Copyright © 2025 Texas Instruments Incorporated

Table 6-2. PAD IO Control Registers (continued)

Default Pin/Ball Name	Package Ball /Pin (Address)	Pin Mux Config Register
GPIO_31	R4	0xFFFFEA7C
GPIO_32	P5	0xFFFFEA80
GPIO_33	R5	0xFFFFEA84
GPIO_34	P6	0xFFFFEA88
GPIO_35	R7	0xFFFFEA8C
GPIO_36	P7	0xFFFFEA90
GPIO_37	R8	0xFFFFEA94
GPIO_38	P8	0xFFFFEA98
GPIO_47	N15	0xFFFFEABC
DMM_SYNC	N14	0xFFFFEAC0

The register layout is as follows:

Table 6-3. PAD IO Register Bit Descriptions

BIT	FIELD	TYPE	RESET (POWER ON DEFAULT)	DESCRIPTION
31-11	NU	RW	0	Reserved
10	SC	RW	0	IO slew rate control: 0 = Higher slew rate 1 = Lower slew rate
9	PUPDSEL	RW	0	Pullup/PullDown Selection 0 = Pull Down 1 = Pull Up (This field is valid only if Pull Inhibit is set as '0')
8	PI	RW	0	Pull Inhibit/Pull Disable 0 = Enable 1 = Disable
7	OE_OVERRIDE	RW	1	Output Override
6	OE_OVERRIDE_CTRL	RW	1	Output Override Control: (A '1' here overrides any o/p manipulation of this IO by any of the peripheral block hardware it is associated with for example a SPI Chip select)
5	IE_OVERRIDE	RW	0	Input Override
4	IE_OVERRIDE_CTRL	RW	0	Input Override Control: (A '1' here overrides any i/p value on this IO with a desired value)
3-0	FUNC_SEL	RW	1	Function select for Pin Multiplexing (Refer to the Pin Mux Sheet)

Copyright © 2025 Texas Instruments Incorporated

7 Specifications

7.1 Absolute Maximum Ratings

PARAMETERS[1] [2]		MIN	MAX	UNIT
VDDIN	1.2 V digital power supply	–0.5	1.4	V
VIN_SRAM	1.2 V power rail for internal SRAM	–0.5	1.4	V
VNWA	1.2 V power rail for SRAM array back bias	–0.5	1.4	V
VIOIN	I/O supply (3.3 V or 1.8 V): All CMOS I/Os would operate on this supply.	–0.5	3.8	V
VIOIN_18	1.8 V supply for CMOS IO	–0.5	2	V
VIN_18CLK	1.8 V supply for clock module	–0.5	2	V
VIOIN_18DIFF	1.8 V supply for LVDS port	–0.5	2	V
VIN_13RF1	1.3 V Analog and RF supply, VIN_13RF1 and VIN_13RF2 could be shorted on the board.	–0.5	1.45	V
VIN_13RF2				
VIN_13RF1 (1-V Internal LDO bypass mode)	Device supports mode where external Power Management block can supply 1 V on VIN_13RF1 and VIN_13RF2 rails. In this configuration, the internal LDO of the device would be kept bypassed.	–0.5	1.4	V
VIN_13RF2 (1-V Internal LDO bypass mode)				
VIN_18BB	1.8-V Analog baseband power supply	–0.5	2	V
VIN_18VCO supply	1.8-V RF VCO supply	–0.5	2	V
RX1-4	Externally applied power on RF inputs		10	dBm
TX1-3	Externally applied power on RF outputs[3]		10	dBm
Input and output voltage range	Dual-voltage LVCMOS inputs, 3.3 V or 1.8 V (Steady State)	–0.3V	VIOIN + 0.3	V
	Dual-voltage LVCMOS inputs, operated at 3.3 V/1.8 V (Transient Overshoot/Undershoot) or external oscillator input		VIOIN + 20% up to 20% of signal period	
CLKP, CLKM	Input ports for reference crystal	–0.5	2	V
Clamp current	Input or Output Voltages 0.3 V above or below their respective power rails. Limit clamp current that flows through the internal diode protection cells of the I/O.	–20	20	mA
T_J	Operating junction temperature range	–40	105	°C
T_{STG}	Storage temperature range after soldered onto PC board	–55	150	°C

(1) Stresses beyond those listed under *Absolute Maximum Ratings* may cause permanent damage to the device. These are stress ratings only, and functional operation of the device at these or any other conditions beyond those indicated under *Recommended Operating Conditions* is not implied. Exposure to absolute-maximum-rated conditions for extended periods may affect device reliability.
(2) All voltage values are with respect to V_{SS}, unless otherwise noted.
(3) This value is for an externally applied signal level on the TX. Additionally, a reflection coefficient up to Gamma = 1 can be applied on the TX output.

7.2 ESD Ratings

			VALUE	UNIT
$V_{(ESD)}$	Electrostatic discharge	Human-body model (HBM), per ANSI/ESDA/JEDEC JS-001[1]	±2000	V
		Charged-device model (CDM), per ANSI/ESDA/JEDEC JS-002[2] [3]	±500	

(1) JEDEC document JEP155 states that 500-V HBM allows safe manufacturing with a standard ESD control process
(2) JEDEC document JEP157 states that 250-V CDM allows safe manufacturing with a standard ESD control process
(3) Corner pins are rated as ±750 V

Copyright © 2025 Texas Instruments Incorporated

7.3 Power-On Hours (POH)

JUNCTION TEMPERATURE (T_j) (1)	OPERATING CONDITION	NOMINAL CVDD VOLTAGE (V)	POWER-ON HOURS [POH] (HOURS)
105°C T_j	50% RF duty cycle	1.2	100,000

(1) This information is provided solely for your convenience and does not extend or modify the warranty provided under TI's standard terms and conditions for TI semiconductor products.

7.4 Recommended Operating Conditions

		MIN	NOM	MAX	UNIT
VDDIN	1.2 V digital power supply	1.14	1.2	1.32	V
VIN_SRAM	1.2 V power rail for internal SRAM	1.14	1.2	1.32	V
VNWA	1.2 V power rail for SRAM array back bias	1.14	1.2	1.32	V
VIOIN	I/O supply (3.3 V or 1.8 V): All CMOS I/Os would operate on this supply.	3.135	3.3	3.465	V
		1.71	1.8	1.89	
VIOIN_18	1.8 V supply for CMOS IO	1.71	1.8	1.9	V
VIN_18CLK	1.8 V supply for clock module	1.71	1.8	1.9	V
VIOIN_18DIFF	1.8 V supply for LVDS port	1.71	1.8	1.9	V
VIN_13RF1	1.3 V Analog and RF supply. VIN_13RF1 and VIN_13RF2 could be shorted on the board	1.23	1.3	1.36	V
VIN_13RF2					
VIN_13RF1 (1-V Internal LDO bypass mode)	Device supports mode where external Power Management block can supply 1 V on VIN_13RF1 and VIN_13RF2 rails. In this configuration, the internal LDO of the device would be kept bypassed.	0.95	1	1.05	V
VIN_13RF2 (1-V Internal LDO bypass mode)					
VIN18BB	1.8-V Analog baseband power supply	1.71	1.8	1.9	V
VIN_18VCO	1.8V RF VCO supply	1.71	1.8	1.9	V
V_{IH}	Voltage Input High (1.8 V mode)	1.17			V
	Voltage Input High (3.3 V mode)	2.25			
V_{IL}	Voltage Input Low (1.8 V mode)			0.3*VIOIN	V
	Voltage Input Low (3.3 V mode)			0.62	
V_{OH}	High-level output threshold (I_{OH} = 6 mA)	VIOIN – 450			mV
V_{OL}	Low-level output threshold (I_{OL} = 6 mA)			450	mV
NRESET SOP[2:0]	V_{IL} (1.8V Mode)			0.45	V
	V_{IH} (1.8V Mode)	0.96			
	V_{IL} (3.3V Mode)			0.65	
	V_{IH} (3.3V Mode)	1.57			

Copyright © 2025 Texas Instruments Incorporated

7.5 VPP Specifications for One-Time Programmable (OTP) eFuses

This section specifies the operating conditions required for programming the OTP eFuses and is applicable only for authenticated boot devices. During the process of writing the customer specific keys or other fields like software version etc. in the efuse, the user needs to provide the VPP supply.

7.5.1 Recommended Operating Conditions for OTP eFuse Programming

PARAMETER	DESCRIPTION	MIN	NOM	MAX	UNIT
VPP	Supply voltage range for the eFuse ROM domain during normal operation		NC[2]		
	Supply voltage range for the eFuse ROM domain during OTP programming [1]	1.65	1.7	1.75	V
Duration of VPP Supply	If VPP voltage is supplied for more than recommended Hours, it can cause reliability issue			24	Hours
I(VPP)				50	mA

(1) During normal operation, no voltage should be applied to VPP. This can be typically achieved by disabling the external regulator attached to the VPP terminal.
(2) NC: No Connect

Note

Power up sequence: VPP must be ramped up at the end i.e after all other rails ramp up is done

7.5.2 Hardware Requirements

The following hardware requirements must be met when programming keys in the OTP eFuses:

- The VPP power supply must be disabled when not programming OTP registers.

7.5.3 Impact to Your Hardware Warranty

You recognize and accept at your own risk that your use of eFuse permanently alters the TI device. You acknowledge that eFuse can fail due to incorrect operating conditions or programming sequence. Such a failure may render the TI device inoperable and TI will be unable to confirm the TI device conformed to TI device specifications prior to the attempted eFuse. CONSEQUENTLY, in these cases of faulty EFUSE programmability, TI WILL HAVE NO LIABILITY.

Copyright © 2025 Texas Instruments Incorporated

7.6 Power Supply Specifications

Table 7-1 describes the four rails from an external power supply block of the IWR6843 device.

Table 7-1. Power Supply Rails Characteristics

SUPPLY	DEVICE BLOCKS POWERED FROM THE SUPPLY	RELEVANT IOS IN THE DEVICE
1.8 V	Synthesizer and APLL VCOs, crystal oscillator, IF Amplifier stages, ADC, LVDS	Input: VIN_18VCO, VIN18CLK, VIN_18BB, VIOIN_18DIFF, VIOIN_18 LDO Output: VOUT_14SYNTH, VOUT_14APLL
1.3 V (or 1 V in internal LDO bypass mode)(1)	Power Amplifier, Low Noise Amplifier, Mixers and LO Distribution	Input: VIN_13RF2, VIN_13RF1 LDO Output: VOUT_PA
3.3 V (or 1.8 V for 1.8 V I/O mode)	Digital I/Os	Input VIOIN
1.2 V	Core Digital and SRAMs	Input: VDDIN, VIN_SRAM

(1) Three simultaneous transmitter operation is supported only in 1-V LDO bypass and PA LDO disable mode. In this mode 1V supply needs to be fed on the VOUT PA pin.

The 1.3-V (1.0 V) and 1.8-V power supply ripple specifications mentioned in Table 7-2 are defined to meet a target spur level of –105 dBc (RF Pin = –15 dBm) at the RX. The spur and ripple levels have a dB-to-dB relationship, for example, a 1-dB increase in supply ripple leads to a ~1 dB increase in spur level. Values quoted are rms levels for a sinusoidal input applied at the specified frequency.

Table 7-2. Ripple Specifications

FREQUENCY (kHz)	RF RAIL		VCO/IF RAIL
	1.0 V (INTERNAL LDO BYPASS) (μV_{RMS})	1.3 V (μV_{RMS})	1.8 V (μV_{RMS})
137.5	7	648	83
275	5	76	21
550	3	22	11
1100	2	4	6
2200	11	82	13
4400	13	93	19
6600	22	117	29

Copyright © 2025 Texas Instruments Incorporated

7.7 Power Consumption Summary

Table 7-3 and Table 7-4 summarize the power consumption at the power terminals.

Table 7-3. Maximum Current Ratings at Power Terminals

PARAMETER	SUPPLY NAME	DESCRIPTION	MIN	TYP	MAX	UNIT
Current consumption[1]	VDDIN, VIN_SRAM, VNWA	Total current drawn by all nodes driven by 1.2V rail			1000	mA
	VIN_13RF1, VIN_13RF2	Total current drawn by all nodes driven by 1.3V rail (or 1V rail in LDO Bypass mode), when only 2 transmitters are used.[2]			2000	
	VIOIN_18, VIN_18CLK, VIOIN_18DIFF, VIN_18BB, VIN_18VCO	Total current drawn by all nodes driven by 1.8V rail			850	
	VIOIN	Total current drawn by all nodes driven by 3.3V rail[3]			50	

(1) The specified current values are at typical supply voltage level.
(2) Simultaneous 3 Transmitter operation is supported only with 1-V LDO bypass and PA LDO disable mode. In this mode, the 1-V supply needs to be fed on the VOUT_PA pin. In this case, the peak 1-V supply current goes up to 2500 mA. To enable the LDO bypass mode, see the *Interface Control* document in the mmWave Device Firmware Package.
(3) The exact VIOIN current depends on the peripherals used and their frequency of operation.

Table 7-4. Average Power Consumption at Power Terminals

PARAMETER	CONDITION			DESCRIPTION	MIN	TYP	MAX	UNIT
Average power consumption	1.0-V internal LDO bypass mode	24% duty cycle	1TX, 4RX	Regular power ADC mode 6.4 Msps complex transceiver, 13.13-ms frame, 64 chirps, 256 samples/chirp, 8.5-µs interchirp time, DSP + Hardware accelerator active		1.19		W
			2TX, 4RX[1]			1.25		
		48% duty cycle	1TX, 4RX	Regular power ADC mode 6.4 Msps complex transceiver, 13.13-ms frame, 64 chirps, 256 samples/chirp, 8.5-µs interchirp time, DSP + Hardware accelerator active		1.62		
			2TX, 4RX[1]			1.75		

(1) Two TX antennas are on simultaneously.

7.8 Power Save Mode

xWR6x43 devices support 2 power down states:

1. RF Power Down state
2. APLL Power Down state

The allowed state transitions are shown in Figure 7-1. This flow chart shows the sequence of steps for entering and exiting power save mode.

Copyright © 2025 Texas Instruments Incorporated

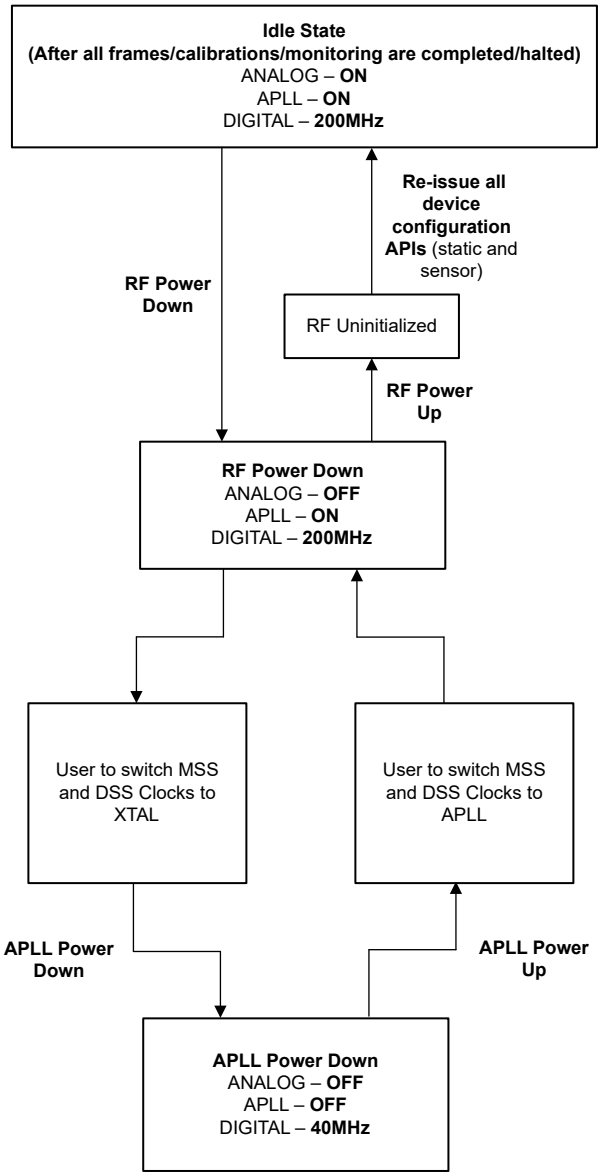

Figure 7-1. Power Save Mode State Transition Diagram

7.9 RF Specification

over recommended operating conditions (unless otherwise noted)

PARAMETER			MIN	TYP	MAX	UNIT
Receiver	Noise figure	60 to 64 GHz		12		dB
	1-dB compression point (Out Of Band)(1)			–12		dBm
	Maximum gain			48		dB
	Gain range			18		dB
	Gain step size			2		dB
	IF bandwidth(2)				10	MHz
	ADC sampling rate (real/complex 2x)				25	Msps
	ADC sampling rate (complex 1x)				12.5	Msps
	ADC resolution			12		Bits
	Idle Channel Spurs			–90		dBFS
Transmitter	Output power			12		dBm
	Power backoff range			26		dB
Clock subsystem	Frequency range		60		64	GHz
	Ramp rate				250	MHz/µs
	Phase noise at 1-MHz offset	60 to 64 GHz		–93		dBc/Hz

(1) 1-dB Compression Point (Out Of Band) is measured by feed a Continuous wave Tone (10 kHz) well below the lowest HPF cut-off frequency.

(2) The analog IF stages include high-pass filtering, with two independently configurable first-order high-pass corner frequencies. The set of available HPF corners is summarized as follows:

Available HPF Corner Frequencies (kHz)

HPF1	HPF2
175, 235, 350, 700	350, 700, 1400, 2800

The filtering performed by the digital baseband chain is targeted to provide:

- Less than ±0.5 dB pass-band ripple/droop, and
- Better than 60 dB anti-aliasing attenuation for any frequency that can alias back into the pass-band.

Figure 7-2 shows variations of noise figure and in-band P1dB parameters with respect to receiver gain programmed.

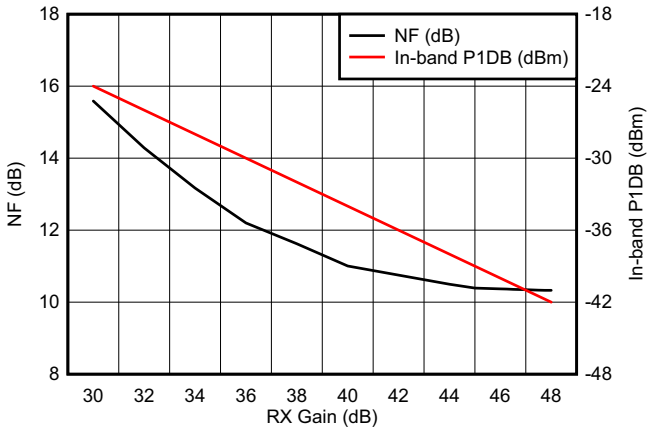

Figure 7-2. Noise Figure, In-band P1dB vs Receiver Gain

Copyright © 2025 Texas Instruments Incorporated

7.10 CPU Specifications

over recommended operating conditions (unless otherwise noted)

PARAMETER		MIN	TYP	MAX	UNIT
DSP Subsystem (C674 Family)	Clock Speed		600		MHz
	L1 Code Memory		32		KB
	L1 Data Memory		32		KB
	L2 Memory		256		KB
Main Subsystem (R4F Family)	Clock Speed		200		MHz
	Tightly Coupled Memory - A (Program)		512		KB
	Tightly Coupled Memory - B (Data)		192		KB
Shared Memory	Shared L3 Memory		768		KB

Copyright © 2025 Texas Instruments Incorporated

7.11 Thermal Resistance Characteristics for FCBGA Package [ABL0161]

THERMAL METRICS[1]		°C/W[2] [3]
$R\Theta_{JC}$	Junction-to-case	4.92
$R\Theta_{JB}$	Junction-to-board	6.57
$R\Theta_{JA}$	Junction-to-free air	22.3
$R\Theta_{JMA}$	Junction-to-moving air	N/A [4]
Psi_{JT}	Junction-to-package top	4.92
Psi_{JB}	Junction-to-board	6.4

(1) For more information about traditional and new thermal metrics, see *Semiconductor and IC Package Thermal Metrics*.
(2) °C/W = degrees Celsius per watt.
(3) These values are based on a JEDEC-defined 2S2P system (with the exception of the Theta JC [$R\Theta_{JC}$] value, which is based on a JEDEC-defined 1S0P system) and will change based on environment as well as application. For more information, see these EIA/JEDEC standards:
- JESD51-2, *Integrated Circuits Thermal Test Method Environmental Conditions - Natural Convection (Still Air)*
- JESD51-3, *Low Effective Thermal Conductivity Test Board for Leaded Surface Mount Packages*
- JESD51-7, *High Effective Thermal Conductivity Test Board for Leaded Surface Mount Packages*
- JESD51-9, *Test Boards for Area Array Surface Mount Package Thermal Measurements*

(4) N/A = not applicable

7.12 Timing and Switching Characteristics

7.12.1 Power Supply Sequencing and Reset Timing

The IWR6843 device expects all external voltage rails to be stable before reset is deasserted. Figure 7-3 describes the device wake-up sequence.

Copyright © 2025 Texas Instruments Incorporated

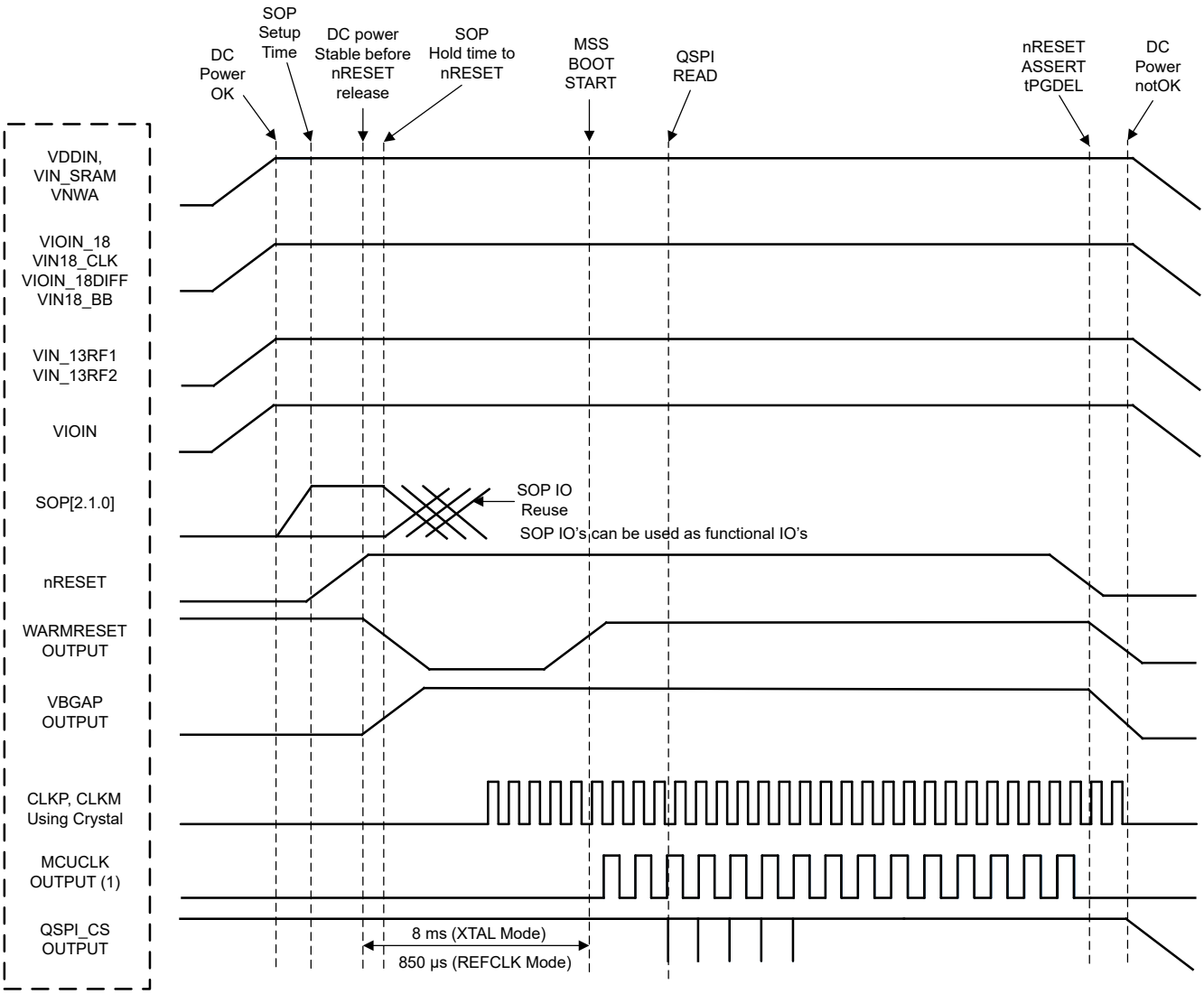

A. MCU_CLK_OUT in autonomous mode, where IWR6843 application is booted from the serial flash, MCU_CLK_OUT is not enabled by default by the device bootloader.

Figure 7-3. Device Wake-up Sequence

7.12.2 Input Clocks and Oscillators

7.12.2.1 Clock Specifications

The IWR6843 requires external clock source (that is, a 40-MHz crystal or external oscillator to CLKP) for initial boot and as a reference for an internal APLL hosted in the device. An external crystal is connected to the device pins. Figure 7-4 shows the crystal implementation.

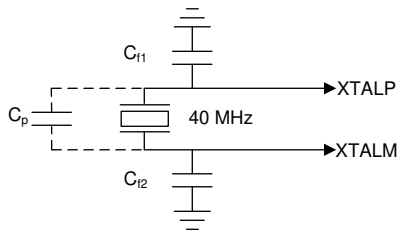

Figure 7-4. Crystal Implementation

Note

The load capacitors, C_{f1} and C_{f2} in Figure 7-4, should be chosen such that Equation 1 is satisfied. C_L in the equation is the load specified by the crystal manufacturer. All discrete components used to implement the oscillator circuit should be placed as close as possible to the associated oscillator CLKP and CLKM pins.

$$C_L = C_{f1} \times \frac{C_{f2}}{C_{f1} + C_{f2}} + C_P \quad (1)$$

Table 7-5 lists the electrical characteristics of the clock crystal.

Table 7-5. Crystal Electrical Characteristics (Oscillator Mode)

NAME	DESCRIPTION	MIN	TYP	MAX	UNIT
f_P	Parallel resonance crystal frequency		40		MHz
C_L	Crystal load capacitance	5	8	12	pF
ESR	Crystal ESR			50	Ω
Temperature range	Expected temperature range of operation	–40		105	°C
Frequency tolerance	Crystal frequency tolerance(1) (2) (3)	–200		200	ppm
Drive level			50	200	µW

(1) The crystal manufacturer's specification must satisfy this requirement.
(2) Includes initial tolerance of the crystal, drift over temperature, aging and frequency pulling due to incorrect load capacitance.
(3) Crystal tolerance affects radar sensor accuracy.

In the case where an external clock is used as the clock resource, the signal is fed to the CLKP pin only; CLKM is grounded. The phase noise requirement is very important when a 40-MHz clock is fed externally. Table 7-6 lists the electrical characteristics of the external clock signal.

Copyright © 2025 Texas Instruments Incorporated

Table 7-6. External Clock Mode Specifications

PARAMETER		SPECIFICATION			UNIT
		MIN	TYP	MAX	
Input Clock: External AC-coupled sine wave or DC-coupled square wave Phase Noise referred to 40 MHz	Frequency		40		MHz
	AC-Amplitude	700		1200	mV (pp)
	DC-V_{il}	0.00		0.20	V
	DC-V_{ih}	1.6		1.95	V
	Phase Noise at 1 kHz			–132	dBc/Hz
	Phase Noise at 10 kHz			–143	dBc/Hz
	Phase Noise at 100 kHz			–152	dBc/Hz
	Phase Noise at 1 MHz			–153	dBc/Hz
	Duty Cycle	35		65	%
	Freq Tolerance	–50		50	ppm
	Freq Tolerance	–50		50	ppm

Copyright © 2025 Texas Instruments Incorporated

7.12.3 Multibuffered / Standard Serial Peripheral Interface (MibSPI)

7.12.3.1 Peripheral Description

The SPI uses a MibSPI Protocol by TI.

The MibSPI/SPI is a high-speed synchronous serial input/output port that allows a serial bit stream of programmed length (2 to 16 bits) to be shifted into and out of the device at a programmed bit-transfer rate. The MibSPI/SPI is normally used for communication between the microcontroller and external peripherals or another microcontroller.

Standard and MibSPI modules have the following features:

- 16-bit shift register
- Receive buffer register
- 8-bit baud clock generator
- SPICLK can be internally-generated (controller mode) or received from an external clock source (peripheral mode)
- Each word transferred can have a unique format.
- SPI I/Os not used in the communication can be used as digital input/output signals

7.12.3.2 MibSPI Transmit and Receive RAM Organization

The Multibuffer RAM is comprised of 256 buffers. Each entry in the Multibuffer RAM consists of 4 parts: a 16-bit transmit field, a 16-bit receive field, a 16-bit control field and a 16-bit status field. The Multibuffer RAM can be partitioned into multiple transfer group with variable number of buffers each.

Section 7.12.3.2.2 and Section 7.12.3.2.3 assume the operating conditions stated in Section 7.12.3.2.1.

7.12.3.2.1 SPI Timing Conditions

		MIN	TYP	MAX	UNIT
Input Conditions					
t_R	Input rise time	1		3	ns
t_F	Input fall time	1		3	ns
Output Conditions					
C_{LOAD}	Output load capacitance	2		15	pF

7.12.3.2.2 SPI Controller Mode Switching Parameters (CLOCK PHASE = 0, SPICLK = output, SPISIMO = output, and SPISOMI = input) (1) (2) (3)

NO.	PARAMETER		MIN	TYP	MAX	UNIT
1	$t_{c(SPC)M}$	Cycle time, SPICLK(4)	25		$256_{tc(VCLK)}$	ns
2(4)	$t_{w(SPCH)M}$	Pulse duration, SPICLK high (clock polarity = 0)	$0.5t_{c(SPC)M} – 4$		$0.5t_{c(SPC)M} + 4$	ns
	$t_{w(SPCL)M}$	Pulse duration, SPICLK low (clock polarity = 1)	$0.5t_{c(SPC)M} – 4$		$0.5t_{c(SPC)M} + 4$	
3(4)	$t_{w(SPCL)M}$	Pulse duration, SPICLK low (clock polarity = 0)	$0.5t_{c(SPC)M} – 4$		$0.5t_{c(SPC)M} + 4$	ns
	$t_{w(SPCH)M}$	Pulse duration, SPICLK high (clock polarity = 1)	$0.5t_{c(SPC)M} – 4$		$0.5t_{c(SPC)M} + 4$	
4(4)	$t_{d(SPCH-SIMO)M}$	Delay time, SPISIMO valid before SPICLK low, (clock polarity = 0)	$0.5t_{c(SPC)M} – 3$			ns
	$t_{d(SPCL-SIMO)M}$	Delay time, SPISIMO valid before SPICLK high, (clock polarity = 1)	$0.5t_{c(SPC)M} – 3$			
5(4)	$t_{v(SPCL-SIMO)M}$	Valid time, SPISIMO data valid after SPICLK low, (clock polarity = 0)	$0.5t_{c(SPC)M} – 10.5$			ns
	$t_{v(SPCH-SIMO)M}$	Valid time, SPISIMO data valid after SPICLK high, (clock polarity = 1)	$0.5t_{c(SPC)M} – 10.5$			

Copyright © 2025 Texas Instruments Incorporated

NO.	PARAMETER			MIN	TYP	MAX	UNIT
6[5]	$t_{C2TDELAY}$	Setup time CS active until SPICLK high (clock polarity = 0)	CSHOLD = 0	(C2TDELAY+2)* $t_{c(VCLK)}$ – 7.5		(C2TDELAY+2) * $t_{c(VCLK)}$ + 7	ns
			CSHOLD = 1	(C2TDELAY +3) * $t_{c(VCLK)}$ – 7.5		(C2TDELAY+3) * $t_{c(VCLK)}$ + 7	
		Setup time CS active until SPICLK low (clock polarity = 1)	CSHOLD = 0	(C2TDELAY+2)* $t_{c(VCLK)}$ – 7.5		(C2TDELAY+2) * $t_{c(VCLK)}$ + 7	
			CSHOLD = 1	(C2TDELAY +3) * $t_{c(VCLK)}$ – 7.5		(C2TDELAY+3) * $t_{c(VCLK)}$ + 7	
7[5]	$t_{T2CDELAY}$	Hold time, SPICLK low until CS inactive (clock polarity = 0)		0.5*$t_{c(SPC)M}$ + (T2CDELAY + 1) *$t_{c(VCLK)}$ – 7		0.5*$t_{c(SPC)M}$ + (T2CDELAY + 1) * $t_{c(VCLK)}$ + 7.5	ns
		Hold time, SPICLK high until CS inactive (clock polarity = 1)		0.5*$t_{c(SPC)M}$ + (T2CDELAY + 1) *$t_{c(VCLK)}$ – 7		0.5*$t_{c(SPC)M}$ + (T2CDELAY + 1) * $t_{c(VCLK)}$ + 7.5	
8[4]	$t_{su(SOMI-SPCL)M}$	Setup time, SPISOMI before SPICLK low (clock polarity = 0)		5			ns
	$t_{su(SOMI-SPCH)M}$	Setup time, SPISOMI before SPICLK high (clock polarity = 1)		5			
9[4]	$t_{h(SPCL-SOMI)M}$	Hold time, SPISOMI data valid after SPICLK low (clock polarity = 0)		3			ns
	$t_{h(SPCH-SOMI)M}$	Hold time, SPISOMI data valid after SPICLK high (clock polarity = 1)		3			

(1) The MASTER bit (SPIGCRx.0) is set and the CLOCK PHASE bit (SPIFMTx.16) is cleared (where x= 0 or 1).
(2) $t_{c(MSS_VCLK)}$ = main subsystem clock time = 1 / $f_{(MSS_VCLK)}$. For more details, see the Technical Reference Manual.
(3) When the SPI is in Controller mode, the following must be true: For PS values from 1 to 255: $t_{c(SPC)M} \geq (PS + 1)t_{c(MSS_VCLK)} \geq 25ns$, where PS is the prescale value set in the SPIFMTx.[15:8] register bits. For PS values of 0: $t_{c(SPC)M} = 2t_{c(MSS_VCLK)} \geq 25ns$.
(4) The active edge of the SPICLK signal referenced is controlled by the CLOCK POLARITY bit (SPIFMTx.17).
(5) C2TDELAY and T2CDELAY is programmed in the SPIDELAY register

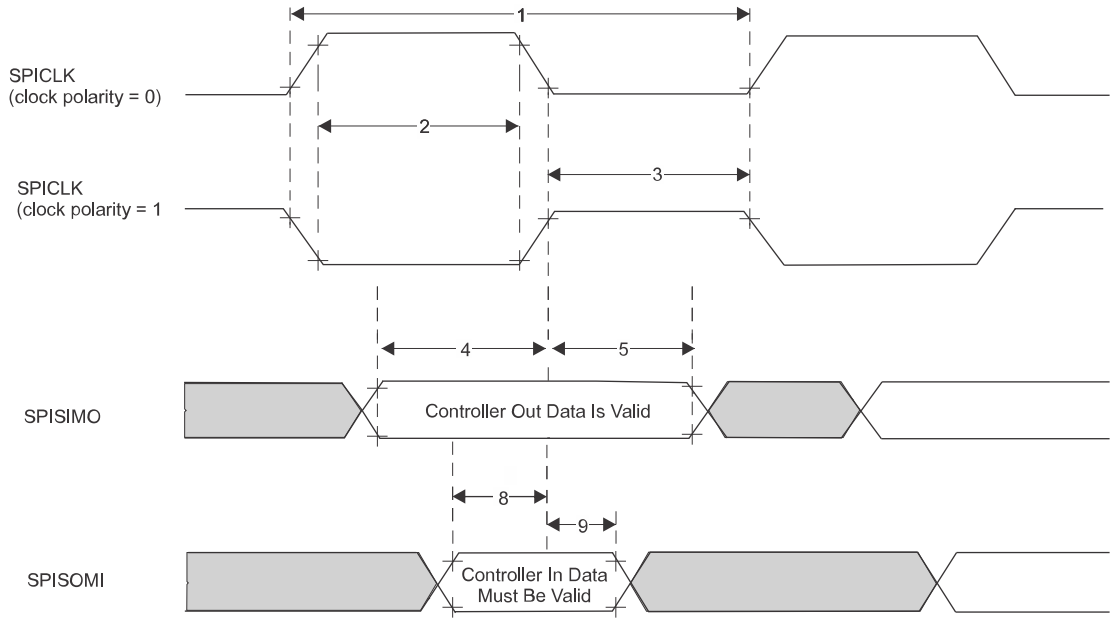

Figure 7-5. SPI Controller Mode External Timing (CLOCK PHASE = 0)

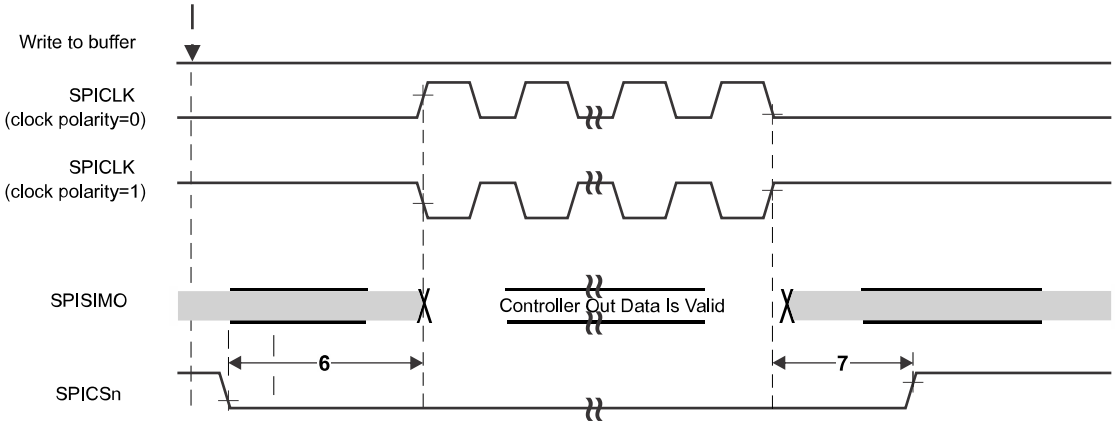

Figure 7-6. SPI Controller Mode Chip Select Timing (CLOCK PHASE = 0)

7.12.3.2.3 SPI Controller Mode Switching Parameters (CLOCK PHASE = 1, SPICLK = output, SPISIMO = output, and SPISOMI = input) [(1) (2) (3)]

NO.	PARAMETER			MIN	TYP	MAX	UNIT
1	$t_{c(SPC)M}$	Cycle time, SPICLK[(4)]		25		$256t_{c(VCLK)}$	ns
2[(4)]	$t_{w(SPCH)M}$	Pulse duration, SPICLK high (clock polarity = 0)		$0.5t_{c(SPC)M} – 4$		$0.5t_{c(SPC)M} + 4$	ns
	$t_{w(SPCL)M}$	Pulse duration, SPICLK low (clock polarity = 1)		$0.5t_{c(SPC)M} – 4$		$0.5t_{c(SPC)M} + 4$	
3[(4)]	$t_{w(SPCL)M}$	Pulse duration, SPICLK low (clock polarity = 0)		$0.5t_{c(SPC)M} – 4$		$0.5t_{c(SPC)M} + 4$	ns
	$t_{w(SPCH)M}$	Pulse duration, SPICLK high (clock polarity = 1)		$0.5t_{c(SPC)M} – 4$		$0.5t_{c(SPC)M} + 4$	
4[(4)]	$t_{d(SPCH-SIMO)M}$	Delay time, SPISIMO valid before SPICLK low, (clock polarity = 0)		$0.5t_{c(SPC)M} – 3$			ns
	$t_{d(SPCL-SIMO)M}$	Delay time, SPISIMO valid before SPICLK high, (clock polarity = 1)		$0.5t_{c(SPC)M} – 3$			
5[(4)]	$t_{v(SPCL-SIMO)M}$	Valid time, SPISIMO data valid after SPICLK low, (clock polarity = 0)		$0.5t_{c(SPC)M} – 10.5$			ns
	$t_{v(SPCH-SIMO)M}$	Valid time, SPISIMO data valid after SPICLK high, (clock polarity = 1)		$0.5t_{c(SPC)M} – 10.5$			
6[(5)]	$t_{C2TDELAY}$	Setup time CS active until SPICLK high (clock polarity = 0)	CSHOLD = 0	$0.5*t_{c(SPC)M} + (C2TDELAY + 2)*t_{c(VCLK)} – 7$		$0.5*t_{c(SPC)M} + (C2TDELAY+2) * t_{c(VCLK)} + 7.5$	ns
			CSHOLD = 1	$0.5*t_{c(SPC)M} + (C2TDELAY + 2)*t_{c(VCLK)} – 7$		$0.5*t_{c(SPC)M} + (C2TDELAY+2) * t_{c(VCLK)} + 7.5$	
		Setup time CS active until SPICLK low (clock polarity = 1)	CSHOLD = 0	$0.5*t_{c(SPC)M} + (C2TDELAY+2)*t_{c(VCLK)} – 7$		$0.5*t_{c(SPC)M} + (C2TDELAY+2) * t_{c(VCLK)} + 7.5$	
			CSHOLD = 1	$0.5*t_{c(SPC)M} + (C2TDELAY+3)*t_{c(VCLK)} – 7$		$0.5*t_{c(SPC)M} + (C2TDELAY+3) * t_{c(VCLK)} + 7.5$	
7[(5)]	$t_{T2CDELAY}$	Hold time, SPICLK low until CS inactive (clock polarity = 0)		$(T2CDELAY + 1) *t_{c(VCLK)} – 7.5$		$(T2CDELAY + 1) *t_{c(VCLK)} + 7$	ns
		Hold time, SPICLK high until CS inactive (clock polarity = 1)		$(T2CDELAY + 1) *t_{c(VCLK)} – 7.5$		$(T2CDELAY + 1) *t_{c(VCLK)} + 7$	

Copyright © 2025 Texas Instruments Incorporated

NO.	PARAMETER		MIN	TYP	MAX	UNIT
8[4]	$t_{su(SOMI-SPCL)M}$	Setup time, SPISOMI before SPICLK low (clock polarity = 0)	5			ns
	$t_{su(SOMI-SPCH)M}$	Setup time, SPISOMI before SPICLK high (clock polarity = 1)	5			
9[4]	$t_{h(SPCL-SOMI)M}$	Hold time, SPISOMI data valid after SPICLK low (clock polarity = 0)	3			ns
	$t_{h(SPCH-SOMI)M}$	Hold time, SPISOMI data valid after SPICLK high (clock polarity = 1)	3			

(1) The MASTER bit (SPIGCRx.0) is set and the CLOCK PHASE bit (SPIFMTx.16) is set (where x = 0 or 1).
(2) $t_{c(MSS_VCLK)}$ = main subsystem clock time = 1 / $f_{(MSS_VCLK)}$. For more details, see the Technical Reference Manual.
(3) When the SPI is in Controller mode, the following must be true: For PS values from 1 to 255: $t_{c(SPC)M} \geq (PS + 1)t_{c(MSS_VCLK)} \geq 25$ ns, where PS is the prescale value set in the SPIFMTx.[15:8] register bits. For PS values of 0: $t_{c(SPC)M} = 2t_{c(MSS_VCLK)} \geq 25$ ns.
(4) The active edge of the SPICLK signal referenced is controlled by the CLOCK POLARITY bit (SPIFMTx.17).
(5) C2TDELAY and T2CDELAY is programmed in the SPIDELAY register

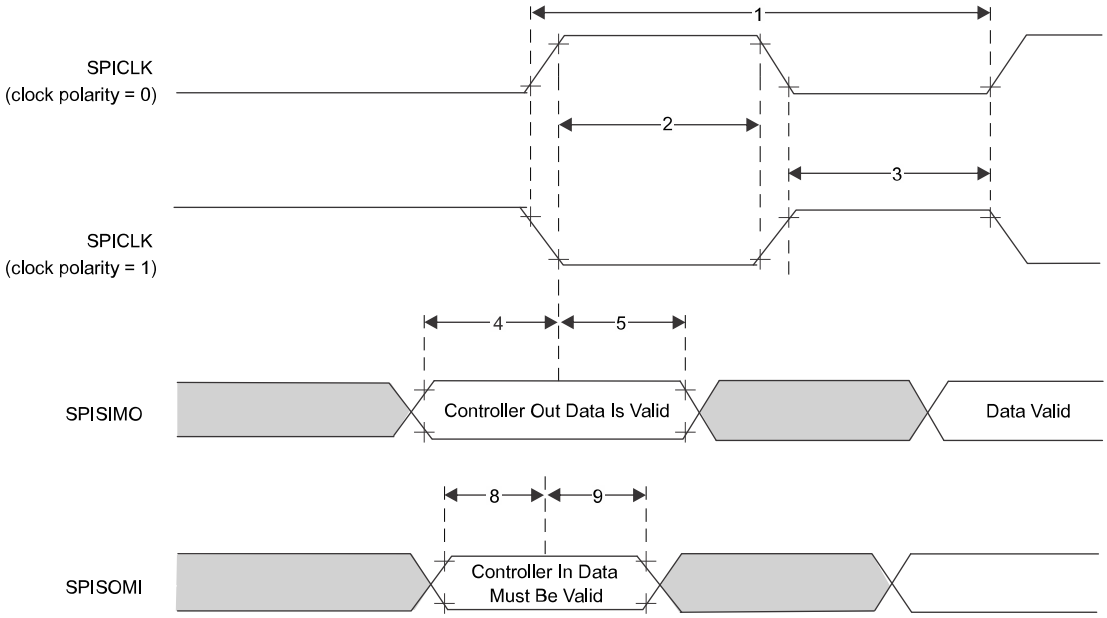

Figure 7-7. SPI Controller Mode External Timing (CLOCK PHASE = 1)

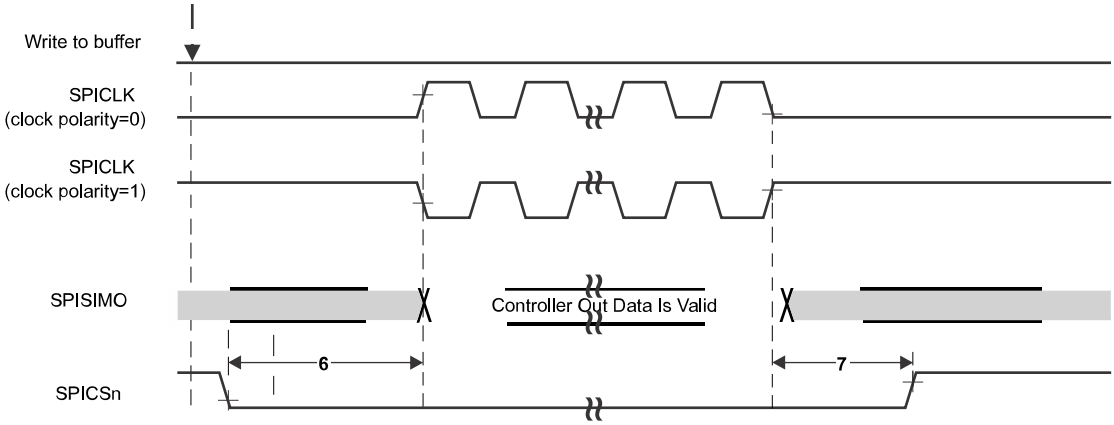

Figure 7-8. SPI Controller Mode Chip Select Timing (CLOCK PHASE = 1)

Copyright © 2025 Texas Instruments Incorporated

7.12.3.3 SPI Peripheral Mode I/O Timings

7.12.3.3.1 SPI Peripheral Mode Switching Parameters (SPICLK = input, SPISIMO = input, and SPISOMI = output) [(1) (2) (3)]

NO.	PARAMETER		MIN	TYP	MAX	UNIT
1	$t_{c(SPC)S}$	Cycle time, SPICLK[(4)]	25			ns
2[(5)]	$t_{w(SPCH)S}$	Pulse duration, SPICLK high (clock polarity = 0)	10			ns
	$t_{w(SPCL)S}$	Pulse duration, SPICLK low (clock polarity = 1)	10			
3[(5)]	$t_{w(SPCL)S}$	Pulse duration, SPICLK low (clock polarity = 0)	10			ns
	$t_{w(SPCH)S}$	Pulse duration, SPICLK high (clock polarity = 1)	10			
4[(5)]	$t_{d(SPCH-SOMI)S}$	Delay time, SPISOMI valid after SPICLK high (clock polarity = 0)			10	ns
	$t_{d(SPCL-SOMI)S}$	Delay time, SPISOMI valid after SPICLK low (clock polarity = 1)			10	
5[(5)]	$t_{h(SPCH-SOMI)S}$	Hold time, SPISOMI data valid after SPICLK high (clock polarity = 0)	2			ns
	$t_{h(SPCL-SOMI)S}$	Hold time, SPISOMI data valid after SPICLK low (clock polarity = 1)	2			
4[(5)]	$t_{d(SPCH-SOMI)S}$	Delay time, SPISOMI valid after SPICLK high (clock polarity = 0; clock phase = 0) OR (clock polarity = 1; clock phase = 1)			10	ns
	$t_{d(SPCL-SOMI)S}$	Delay time, SPISOMI valid after SPICLK low (clock polarity = 1; clock phase = 0) OR (clock polarity = 0; clock phase = 1)			10	
5[(5)]	$t_{h(SPCH-SOMI)S}$	Hold time, SPISOMI data valid after SPICLK high (clock polarity = 0; clock phase = 0) OR (clock polarity = 1; clock phase = 1)	2			ns
	$t_{h(SPCL-SOMI)S}$	Hold time, SPISOMI data valid after SPICLK low (clock polarity = 1; clock phase = 0) OR (clock polarity = 0; clock phase = 1)	2			
6[(5)]	$t_{su(SIMO-SPCL)S}$	Setup time, SPISIMO before SPICLK low (clock polarity = 0; clock phase = 0) OR (clock polarity = 1; clock phase = 1)	3			ns
	$t_{su(SIMO-SPCH)S}$	Setup time, SPISIMO before SPICLK high (clock polarity = 1; clock phase = 0) OR (clock polarity = 0; clock phase = 1)	3			
7[(5)]	$t_{h(SPCL-SIMO)S}$	Hold time, SPISIMO data valid after SPICLK low (clock polarity = 0; clock phase = 0) OR (clock polarity = 1; clock phase = 1)	1			ns
	$t_{h(SPCL-SIMO)S}$	Hold time, SPISIMO data valid after SPICLK high (clock polarity = 1; clock phase = 0) OR (clock polarity = 0; clock phase = 1)	1			

(1) The MASTER bit (SPIGCRx.0) is cleared (where x = 0 or 1).
(2) The CLOCK PHASE bit (SPIFMTx.16) is either cleared or set for CLOCK PHASE = 0 or CLOCK PHASE = 1 respectively.
(3) $t_{c(MSS_VCLK)}$ = main subsystem clock time = 1 / $f_{(MSS_VCLK)}$. For more details, see the Technical Reference Manual.
(4) When the SPI is in peripheral mode, the following must be true: For PS values from 1 to 255: $t_{c(SPC)S} \geq (PS + 1)t_{c(MSS_VCLK)} \geq 25$ ns, where PS is the prescale value set in the SPIFMTx.[15:8] register bits.For PS values of 0: $t_{c(SPC)S} = 2t_{c(MSS_VCLK)} \geq 25$ ns.
(5) The active edge of the SPICLK signal referenced is controlled by the CLOCK POLARITY bit (SPIFMTx.17).

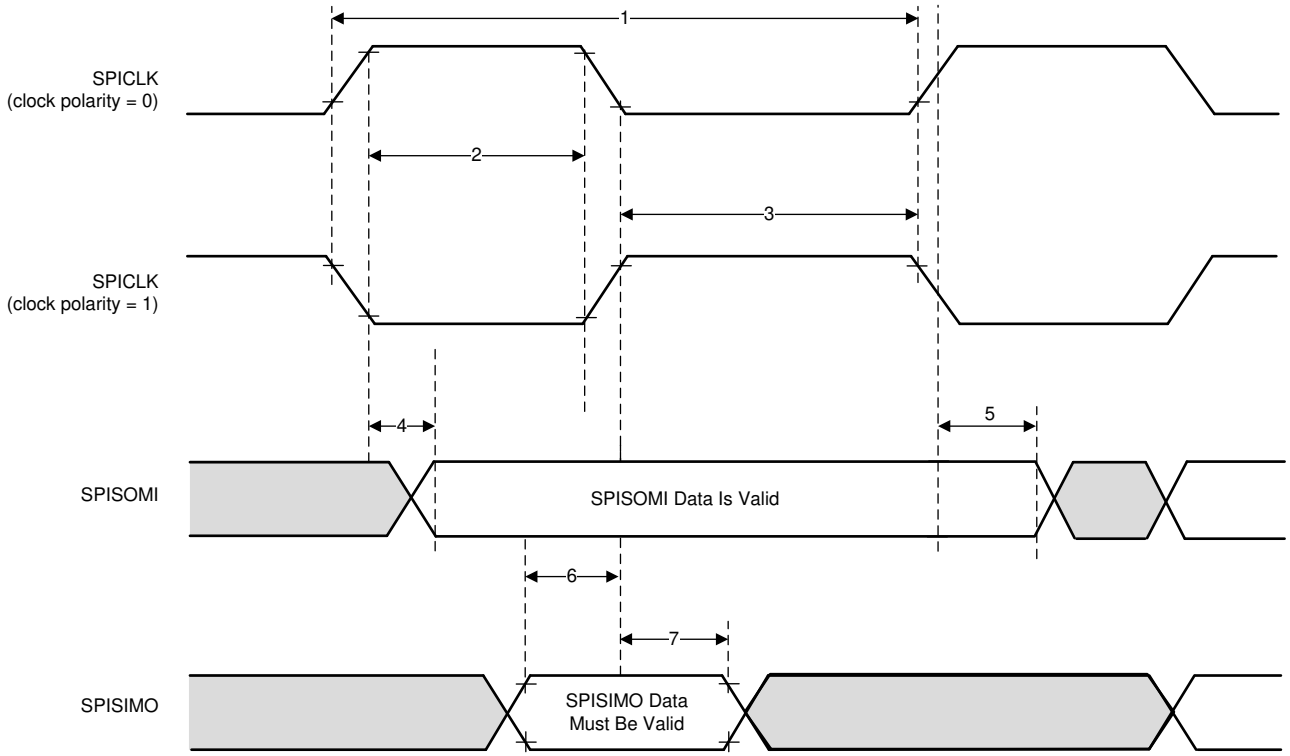

Figure 7-9. SPI peripheral Mode External Timing (CLOCK PHASE = 0)

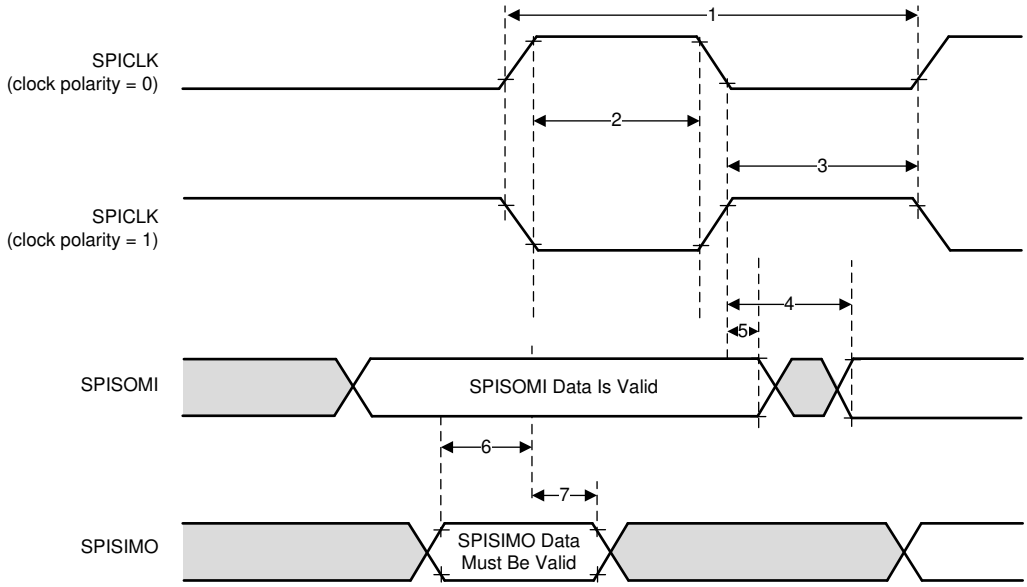

Figure 7-10. SPI peripheral Mode External Timing (CLOCK PHASE = 1)

Copyright © 2025 Texas Instruments Incorporated

7.12.3.4 Typical Interface Protocol Diagram (Peripheral Mode)

1. Host should ensure that there is a delay of two SPI clocks between CS going low and start of SPI clock.
2. Host should ensure that CS is toggled for every 16 bits of transfer through SPI.

Figure 7-11 shows the SPI communication timing of the typical interface protocol.

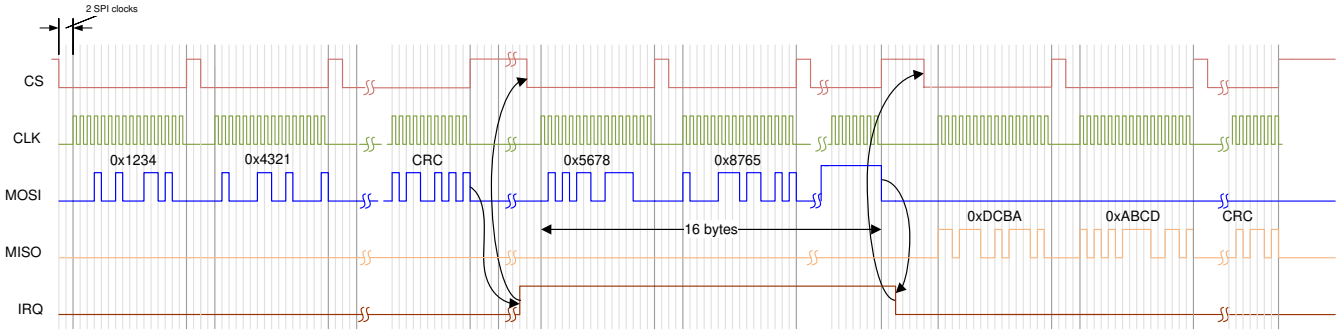

Figure 7-11. SPI Communication

7.12.4 LVDS Interface Configuration

The supported IWR6843 LVDS lane configuration is two Data lanes (LVDS_TXP/M), one Bit Clock lane (LVDS_CLKP/M) and one Frame clock lane (LVDS_FRCLKP/M). The LVDS interface is used for debugging. The LVDS interface supports the following data rates:

- 900 Mbps (450 MHz DDR Clock)
- 600 Mbps (300 MHz DDR Clock)
- 450 Mbps (225 MHz DDR Clock)
- 400 Mbps (200 MHz DDR Clock)
- 300 Mbps (150 MHz DDR Clock)
- 225 Mbps (112.5 MHz DDR Clock)
- 150 Mbps (75 MHz DDR Clock)

Note that the bit clock is in DDR format and hence the numbers of toggles in the clock is equivalent to data.

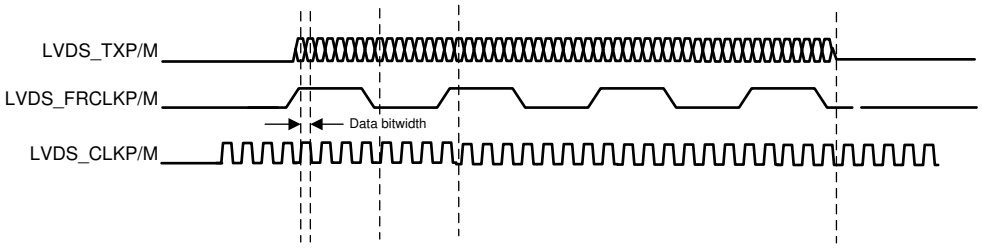

Figure 7-12. LVDS Interface Lane Configuration And Relative Timings

7.12.4.1 LVDS Interface Timings

Table 7-7. LVDS Electrical Characteristics

PARAMETER	TEST CONDITIONS	MIN	TYP	MAX	UNIT
Duty Cycle Requirements	max 1 pF lumped capacitive load on LVDS lanes	48%		52%	
Output Differential Voltage	peak-to-peak single-ended with 100 Ω resistive load between differential pairs	250		450	mV
Output Offset Voltage		1125		1275	mV
Trise and Tfall	20%-80%, 900 Mbps		330		ps
Jitter (pk-pk)	900 Mbps		80		ps

Copyright © 2025 Texas Instruments Incorporated

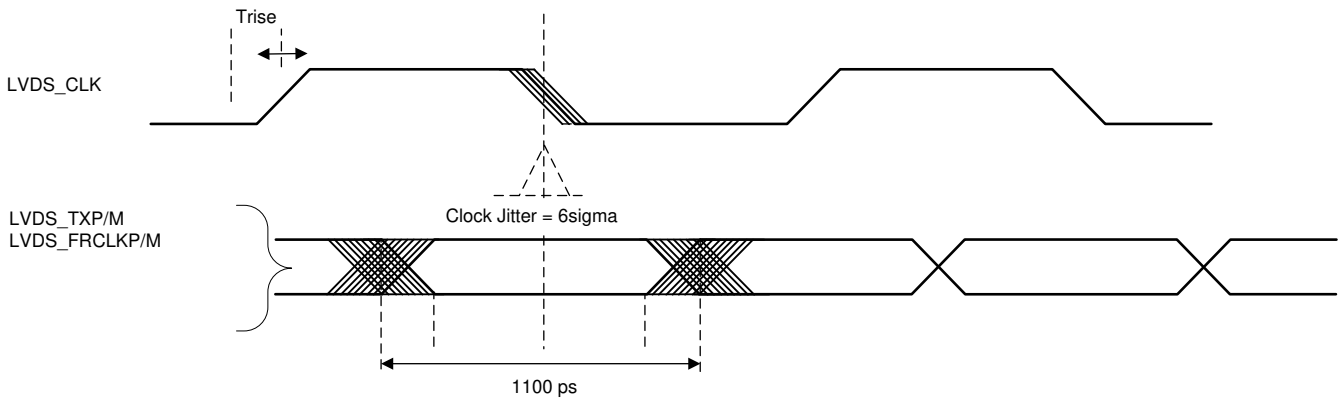

Figure 7-13. Timing Parameters

7.12.5 General-Purpose Input/Output

Section 7.12.5.1 lists the switching characteristics of output timing relative to load capacitance.

7.12.5.1 Switching Characteristics for Output Timing versus Load Capacitance (C_L)

PARAMETER(1) (2)		TEST CONDITIONS		VIOIN = 1.8V	VIOIN = 3.3V	UNIT
t_r	Max rise time	Slew control = 0	C_L = 20 pF	2.8	3.0	ns
			C_L = 50 pF	6.4	6.9	
			C_L = 75 pF	9.4	10.2	
t_f	Max fall time		C_L = 20 pF	2.8	2.8	ns
			C_L = 50 pF	6.4	6.6	
			C_L = 75 pF	9.4	9.8	
t_r	Max rise time	Slew control = 1	C_L = 20 pF	3.3	3.3	ns
			C_L = 50 pF	6.7	7.2	
			C_L = 75 pF	9.6	10.5	
t_f	Max fall time		C_L = 20 pF	3.1	3.1	ns
			C_L = 50 pF	6.6	6.6	
			C_L = 75 pF	9.6	9.6	

(1) Slew control, which is configured by PADxx_CFG_REG, changes behavior of the output driver (faster or slower output slew rate).
(2) The rise/fall time is measured as the time taken by the signal to transition from 10% and 90% of VIOIN voltage.

Copyright © 2025 Texas Instruments Incorporated

7.12.6 Controller Area Network - Flexible Data-rate (CAN-FD)

The CAN-FD module supports both classic CAN and CAN FD (CAN with Flexible Data-Rate) specifications. CAN FD feature allows high throughput and increased payload per data frame. The classic CAN and CAN FD devices can coexist on the same network without any conflict.

The CAN-FD has the following features:

- Conforms with CAN Protocol 2.0 A, B and ISO 11898-1
- Full CAN FD support (up to 64 data bytes per frame)
- AUTOSAR and SAE J1939 support
- Up to 32 dedicated Transmit Buffers
- Configurable Transmit FIFO, up to 32 elements
- Configurable Transmit Queue, up to 32 elements
- Configurable Transmit Event FIFO, up to 32 elements
- Up to 64 dedicated Receive Buffers
- Two configurable Receive FIFOs, up to 64 elements each
- Up to 128 11-bit filter elements
- Internal Loopback mode for self-test
- Mask-able interrupts, two interrupt lines
- Two clock domains (CAN clock / Host clock)
- Parity / ECC support - Message RAM single error correction and double error detection (SECDED) mechanism
- Full Message Memory capacity (4352 words).

7.12.6.1 Dynamic Characteristics for the CANx TX and RX Pins

PARAMETER		MIN	TYP	MAX	UNIT
$t_{d(CAN_FD_tx)}$	Delay time, transmit shift register to CAN_FD_tx pin[(1)]			15	ns
$t_{d(CAN_FD_rx)}$	Delay time, CAN_FD_rx pin to receive shift register[(1)]			10	ns

(1) These values do not include rise/fall times of the output buffer.

7.12.7 Serial Communication Interface (SCI)

The SCI has the following features:

- Standard universal asynchronous receiver-transmitter (UART) communication
- Standard non-return to zero (NRZ) format
- Double-buffered receive and transmit functions
- Asynchronous or iso-synchronous communication modes with no CLK pin
- Capability to use Direct Memory Access (DMA) for transmit and receive data
- Two external pins: RS232_RX and RS232_TX

7.12.7.1 SCI Timing Requirements

		MIN	TYP	MAX	UNIT
f(baud)	Supported baud rate at 20 pF		921.6		kHz

Copyright © 2025 Texas Instruments Incorporated

7.12.8 Inter-Integrated Circuit Interface (I2C)

The inter-integrated circuit (I2C) module is a multicontroller communication module providing an interface between devices compliant with Philips Semiconductor I2C-bus specification version 2.1 and connected by an I^2C-bus™. This module will support any target or controller I2C compatible device.

The I2C has the following features:

- Compliance to the Philips I2C bus specification, v2.1 (The I2C Specification, Philips document number 9398 393 40011)
  - Bit/Byte format transfer
  - 7-bit and 10-bit device addressing modes
  - General call
  - START byte
  - Multi-controller transmitter/ target receiver mode
  - Multi-controller receiver/ target transmitter mode
  - Combined controller transmit/receive and receive/transmit mode
  - Transfer rates of 100 kbps up to 400 kbps (Phillips fast-mode rate)
- Free data format
- Two DMA events (transmit and receive)
- DMA event enable/disable capability
- Module enable/disable capability
- The SDA and SCL are optionally configurable as general purpose I/O
- Slew rate control of the outputs
- Open drain control of the outputs
- Programmable pullup/pulldown capability on the inputs
- Supports Ignore NACK mode

Note

This I2C module does not support:

- High-speed (HS) mode
- C-bus compatibility mode
- The combined format in 10-bit address mode (the I2C sends the target address second byte every time it sends the target address first byte)

7.12.8.1 I2C Timing Requirements [1]

		STANDARD MODE		FAST MODE		UNIT
		MIN	MAX	MIN	MAX	
$t_{c(SCL)}$	Cycle time, SCL	10		2.5		µs
$t_{su(SCLH-SDAL)}$	Setup time, SCL high before SDA low (for a repeated START condition)	4.7		0.6		µs
$t_{h(SCLL-SDAL)}$	Hold time, SCL low after SDA low (for a START and a repeated START condition)	4		0.6		µs
$t_{w(SCLL)}$	Pulse duration, SCL low	4.7		1.3		µs
$t_{w(SCLH)}$	Pulse duration, SCL high	4		0.6		µs
$t_{su(SDA-SCLH)}$	Setup time, SDA valid before SCL high	250		100		µs
$t_{h(SCLL-SDA)}$	Hold time, SDA valid after SCL low	0	3.45[1]	0	0.9	µs
$t_{w(SDAH)}$	Pulse duration, SDA high between STOP and START conditions	4.7		1.3		µs
$t_{su(SCLH-SDAH)}$	Setup time, SCL high before SDA high (for STOP condition)	4		0.6		µs
$t_{w(SP)}$	Pulse duration, spike (must be suppressed)			0	50	ns
C_b [2] [3]	Capacitive load for each bus line		400		400	pF

(1) The I2C pins SDA and SCL do not feature fail-safe I/O buffers. These pins could potentially draw current when the device is powered down.
(2) The maximum th(SDA-SCLL) for I2C bus devices has only to be met if the device does not stretch the low period (tw(SCLL)) of the SCL signal.
(3) C_b = total capacitance of one bus line in pF. If mixed with fast-mode devices, faster fall-times are allowed.

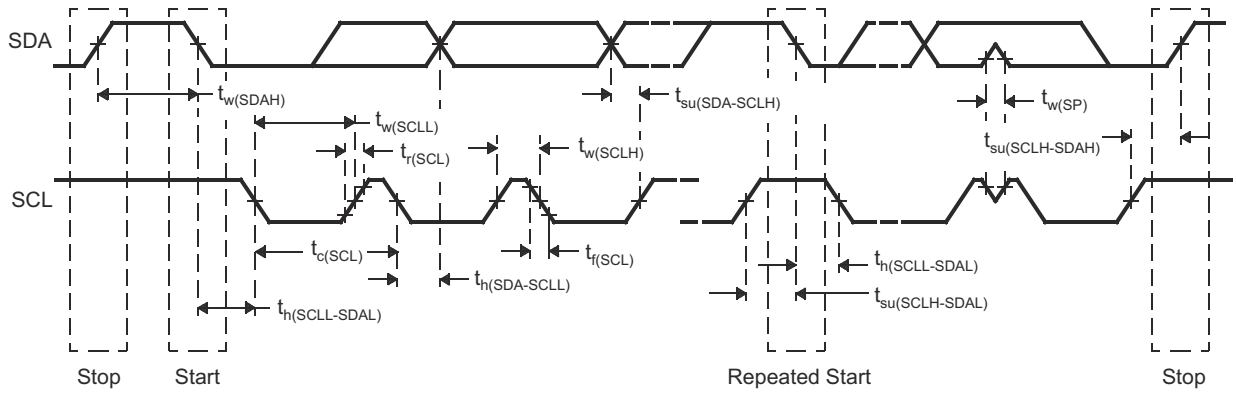

Figure 7-14. I2C Timing Diagram

Note

- A device must internally provide a hold time of at least 300 ns for the SDA signal (referred to the VIHmin of the SCL signal) to bridge the undefined region of the falling edge of SCL.
- The maximum th(SDA-SCLL) has only to be met if the device does not stretch the LOW period (tw(SCLL)) of the SCL signal. E.A Fast-mode I2C-bus device can be used in a Standard-mode I2C-bus system, but the requirement $t_{su(SDA-SCLH)} \geq 250$ ns must then be met. This will automatically be the case if the device does not stretch the LOW period of the SCL signal. If such a device does stretch the LOW period of the SCL signal, it must output the next data bit to the SDA line tr max + $t_{su(SDA-SCLH)}$.

Copyright © 2025 Texas Instruments Incorporated

7.12.9 Quad Serial Peripheral Interface (QSPI)

The quad serial peripheral interface (QSPI) module is a kind of SPI module that allows single, dual, or quad read access to external SPI devices. This module has a memory mapped register interface, which provides a direct interface for accessing data from external SPI devices and thus simplifying software requirements. The QSPI works as a controller only. The QSPI in the device is primarily intended for fast booting from quad-SPI flash memories.

The QSPI supports the following features:

- Programmable clock divider
- Six-pin interface
- Programmable length (from 1 to 128 bits) of the words transferred
- Programmable number (from 1 to 4096) of the words transferred
- Support for 3-, 4-, or 6-pin SPI interface
- Optional interrupt generation on word or frame (number of words) completion
- Programmable delay between chip select activation and output data from 0 to 3 QSPI clock cycles

Timing Requirements for QSPI Input (Read) Timings and *QSPI Switching Characteristics* assume the operating conditions stated in *QSPI Timing Conditions*.

7.12.9.1 QSPI Timing Conditions

		MIN	TYP	MAX	UNIT
Input Conditions					
t_R	Input rise time	1		3	ns
t_F	Input fall time	1		3	ns
Output Conditions					
C_{LOAD}	Output load capacitance	2		15	pF

7.12.9.2 Timing Requirements for QSPI Input (Read) Timings (1) (2)

		MIN	TYP	MAX	UNIT
$t_{su(D-SCLK)}$	Setup time, d[3:0] valid before falling sclk edge	7.3			ns
$t_{h(SCLK-D)}$	Hold time, d[3:0] valid after falling sclk edge	1.5			ns
$t_{su(D-SCLK)}$	Setup time, final d[3:0] bit valid before final falling sclk edge	7.3 – P(3)			ns
$t_{h(SCLK-D)}$	Hold time, final d[3:0] bit valid after final falling sclk edge	1.5 + P(3)			ns

(1) Clock Mode 0 (clk polarity = 0 ; clk phase = 0) is the mode of operation.
(2) The Device captures data on the falling clock edge in Clock Mode 0, as opposed to the traditional rising clock edge. Although non-standard, the falling-edge-based setup and hold time timings have been designed to be compatible with standard SPI devices that launch data on the falling edge in Clock Mode 0.
(3) P = SCLK period in ns.

7.12.9.3 QSPI Switching Characteristics

NO.	PARAMETER		MIN	TYP	MAX	UNIT
Q1	$t_{c(SCLK)}$	Cycle time, sclk	12.5			ns
Q2	$t_{w(SCLKL)}$	Pulse duration, sclk low	Y*P – 3(1) (2)			ns
Q3	$t_{w(SCLKH)}$	Pulse duration, sclk high	Y*P – 3(1)			ns
Q4	$t_{d(CS-SCLK)}$	Delay time, sclk falling edge to cs active edge	–M*P – 1(1) (3)		–M*P + 2.5(1) (3)	ns
Q5	$t_{d(SCLK-CS)}$	Delay time, sclk falling edge to cs inactive edge	N*P – 1(1) (3)		N*P + 2.5(1) (3)	ns
Q6	$t_{d(SCLK-D1)}$	Delay time, sclk falling edge to d[1] transition	–3.5		7	ns
Q7	$t_{ena(CS-D1LZ)}$	Enable time, cs active edge to d[1] driven (lo-z)	–P – 4(3)		–P +1(3)	ns
Q8	$t_{dis(CS-D1Z)}$	Disable time, cs active edge to d[1] tri-stated (hi-z)	–P – 4(3)		–P +1(3)	ns
Q9	$t_{d(SCLK-D1)}$	Delay time, sclk first falling edge to first d[1] transition (for PHA = 0 only)	–3.5 – P(3)		7 – P(3)	ns
Q12	$t_{su(D-SCLK)}$	Setup time, d[3:0] valid before falling sclk edge	7.3			ns
Q13	$t_{h(SCLK-D)}$	Hold time, d[3:0] valid after falling sclk edge	1.5			ns
Q14	$t_{su(D-SCLK)}$	**Setup time, final d[3:0] bit valid before final falling sclk edge**	7.3 — P(3)			ns
Q15	$t_{h(SCLK-D)}$	Hold time, final d[3:0] bit valid after final falling sclk edge	1.5 + P(3)			ns

(1) The Y parameter is defined as follows: If DCLK_DIV is 0 or ODD then, Y equals 0.5. If DCLK_DIV is EVEN then, Y equals (DCLK_DIV/2) / (DCLK_DIV+1). For best performance, it is recommended to use a DCLK_DIV of 0 or ODD to minimize the duty cycle distortion. All required details about clock division factor DCLK_DIV can be found in the device-specific Technical Reference Manual.
(2) P = SCLK period in ns.
(3) M = QSPI_SPI_DC_REG.DDx + 1, N = 2

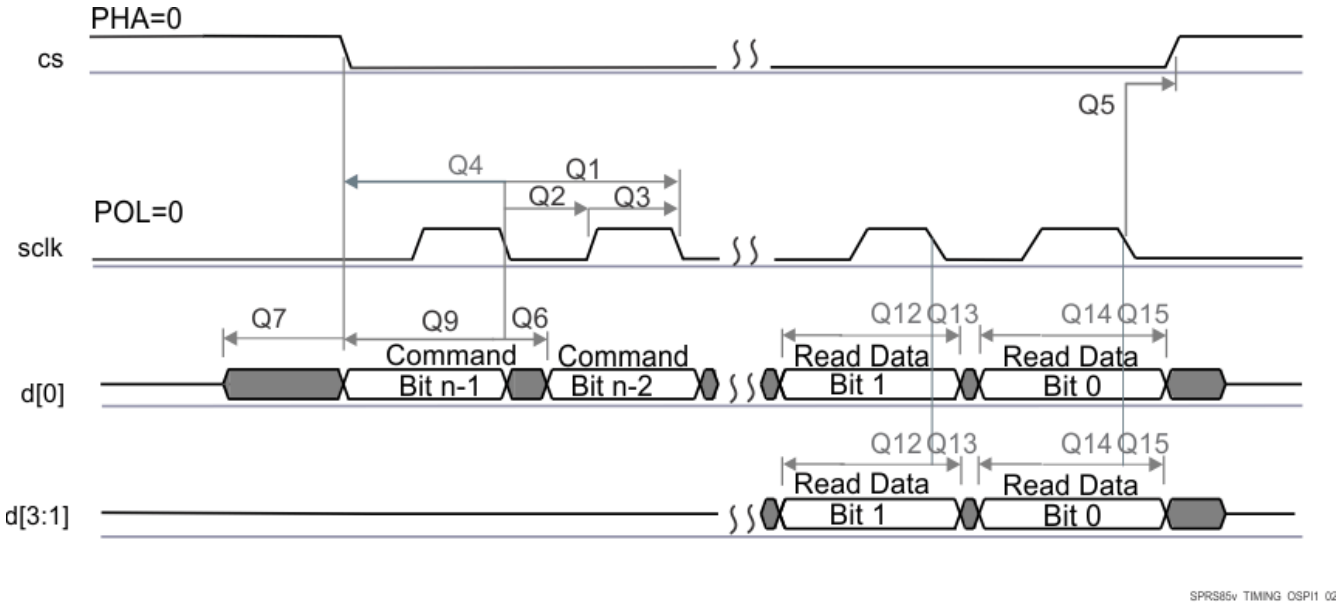

Figure 7-15. QSPI Read (Clock Mode 0)

Copyright © 2025 Texas Instruments Incorporated

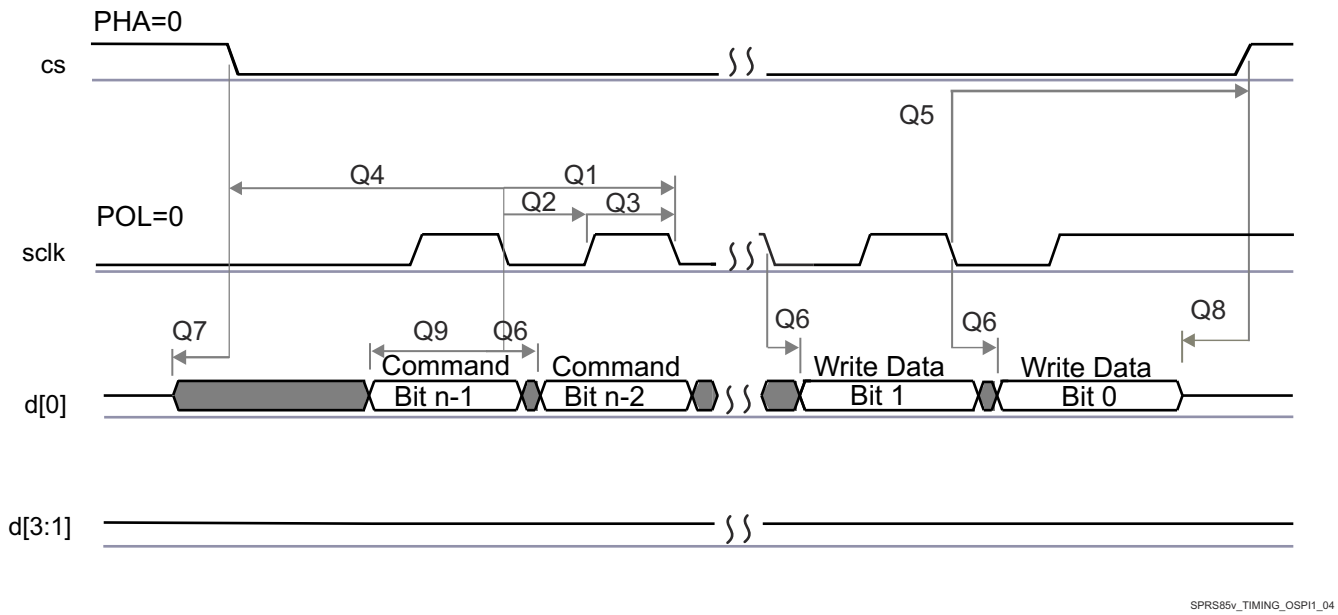

Figure 7-16. QSPI Write (Clock Mode 0)

7.12.10 ETM Trace Interface

Section 7.12.10.2 and Section 7.12.8.1 assume the recommended operating conditions stated in Section 7.12.10.1.

7.12.10.1 ETMTRACE Timing Conditions

		MIN	TYP	MAX	UNIT
Output Conditions					
C_{LOAD}	Output load capacitance	2		20	pF

7.12.10.2 ETM TRACE Switching Characteristics

NO.	PARAMETER		MIN	TYP	MAX	UNIT
1	$t_{cyc(ETM)}$	Cycle time, TRACECLK period	20			ns
2	$t_{h(ETM)}$	Pulse Duration, TRACECLK High	9			ns
3	$t_{l(ETM)}$	Pulse Duration, TRACECLK Low	9			ns
4	$t_{r(ETM)}$	Clock and data rise time			3.3	ns
5	$t_{f(ETM)}$	Clock and data fall time			3.3	ns
6	$t_{d(ETMTRACE CLKH-ETMDATAV)}$	Delay time, ETM trace clock high to ETM data valid	1		7	ns
7	$t_{d(ETMTRACE CLKI-ETMDATAV)}$	Delay time, ETM trace clock low to ETM data valid	1		7	ns

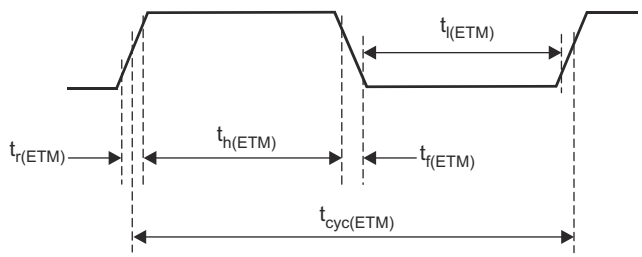

Figure 7-17. ETMTRACECLKOUT Timing

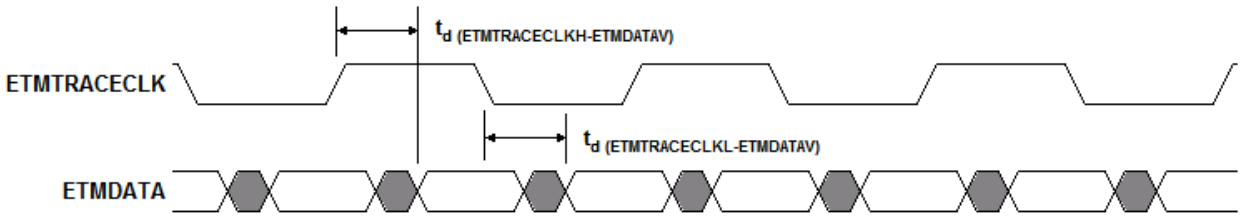

Figure 7-18. ETMDATA Timing

Copyright © 2025 Texas Instruments Incorporated

7.12.11 Data Modification Module (DMM)

A Data Modification Module (DMM) gives the ability to write external data into the device memory.

The DMM has the following features:

- Acts as a bus controller, thus enabling direct writes to the 4GB address space without CPU intervention
- Writes to memory locations specified in the received packet (leverages packets defined by trace mode of the RAM trace port [RTP] module)
- Writes received data to consecutive addresses, which are specified by the DMM (leverages packets defined by direct data mode of RTP module)
- Configurable port width (1, 2, 4, 8 pins)
- Up to 100 Mbit/s pin data rate

7.12.11.1 DMM Timing Requirements

		MIN	TYP	MAX	UNIT
$t_{cyc(DMM)}$	Clock period	10			ns
t_R	Clock rise time	1		3	ns
t_F	Clock fall time	1		3	ns
$t_{h(DMM)}$	High pulse width	6			ns
$t_{l(DMM)}$	Low pulse width	6			ns
$t_{ssu(DMM)}$	SYNC active to clk falling edge setup time	2			ns
$t_{sh(DMM)}$	DMM clk falling edge to SYNC deactive hold time	3			ns
$t_{dsu(DMM)}$	DATA to DMM clk falling edge setup time	2			ns
$t_{dh(DMM)}$	DMM clk falling edge to DATA hold time	3			ns

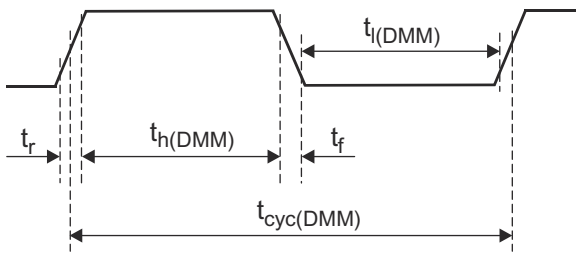

Figure 7-19. DMMCLK Timing

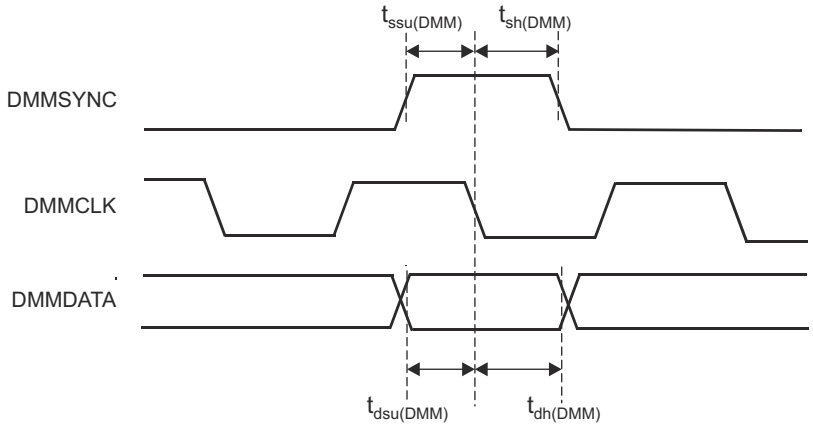

Figure 7-20. DMMDATA Timing

7.12.12 JTAG Interface

Section 7.12.12.2 and Section 7.12.12.3 assume the operating conditions stated in Section 7.12.12.1.

7.12.12.1 JTAG Timing Conditions

		MIN	TYP	MAX	UNIT
Input Conditions					
t_R	Input rise time	1		3	ns
t_F	Input fall time	1		3	ns
Output Conditions					
C_{LOAD}	Output load capacitance	2		15	pF

7.12.12.2 Timing Requirements for IEEE 1149.1 JTAG

NO.			MIN	TYP	MAX	UNIT
1	$t_{c(TCK)}$	Cycle time TCK	66.66			ns
1a	$t_{w(TCKH)}$	Pulse duration TCK high (40% of tc)	26.67			ns
1b	$t_{w(TCKL)}$	Pulse duration TCK low(40% of tc)	26.67			ns
3	$t_{su(TDI-TCK)}$	Input setup time TDI valid to TCK high	2.5			ns
	$t_{su(TMS-TCK)}$	Input setup time TMS valid to TCK high	2.5			ns
4	$t_{h(TCK-TDI)}$	Input hold time TDI valid from TCK high	18			ns
	$t_{h(TCK-TMS)}$	Input hold time TMS valid from TCK high	18			ns

7.12.12.3 Switching Characteristics Over Recommended Operating Conditions for IEEE 1149.1 JTAG

NO.	PARAMETER		MIN	TYP	MAX	UNIT
2	$t_{d(TCKL-TDOV)}$	Delay time, TCK low to TDO valid	0		25	ns

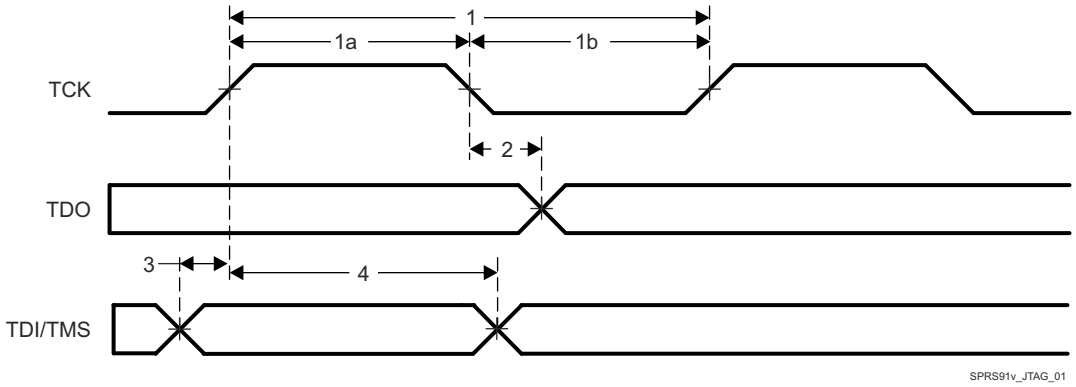

Figure 7-21. JTAG Timing

Copyright © 2025 Texas Instruments Incorporated

8 Detailed Description

8.1 Overview

The IWR6843 device includes the entire Millimeter Wave blocks and analog baseband signal chain for three transmitters and four receivers, as well as a customer-programmable MCU and DSP. This device is applicable as a radar-on-a-chip in use-cases with modest requirements for memory, processing capacity and application code size. These could be cost-sensitive industrial radar sensing applications. Examples are:

- Industrial-level sensing
- Industrial automation sensor fusion with radar
- Traffic intersection monitoring with radar
- Industrial radar-proximity monitoring
- People counting
- Gesturing

In terms of scalability, the IWR6843 device could be paired with a low-end external MCU, to address more complex applications that might require additional memory for a larger application software footprint and faster interfaces. The IWR6843 has an embedded DSP for signal processing, processing the radar signals for FFT, magnitude, detection, and other applications.

8.2 Functional Block Diagram

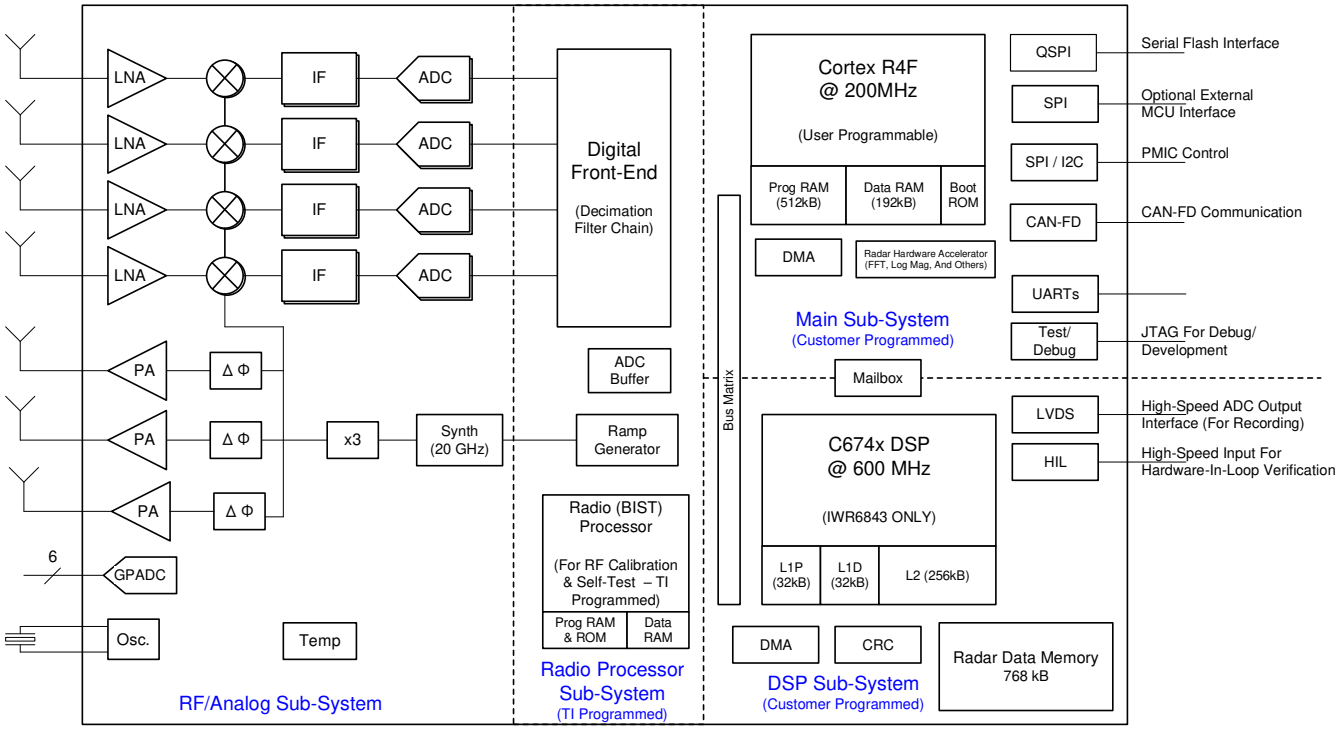

Figure 8-1. Functional Block Diagram

8.3 Subsystems

8.3.1 RF and Analog Subsystem

The RF and analog subsystem includes the RF and analog circuitry – namely, the synthesizer, PA, LNA, mixer, IF, and ADC. This subsystem also includes the crystal oscillator and temperature sensors. The three transmit channels can be operated up to a maximum of two at a time (simultaneously) in 1.3-V mode. The three Transmit channels simultaneous operation is supported only with 1-V LDO bypass and PA LDO disabled mode for transmit beamforming purpose, as required. In this mode, the 1-V supply needs to be fed on the VIN_13RF1, VIN_13RF2, and VOUT PA pin; whereas, the four receive channels can all be operated simultaneously.

Copyright © 2025 Texas Instruments Incorporated

8.3.1.1 Clock Subsystem

The IWR6843 clock subsystem generates 60 to 64 GHz from an input reference of 40-MHz crystal. It has a built-in oscillator circuit followed by a clean-up PLL and a RF synthesizer circuit. The output of the RF synthesizer is then processed by an X3 multiplier to create the required frequency in the 60 to 64 GHz spectrum. The RF synthesizer output is modulated by the timing engine block to create the required waveforms for effective sensor operation.

The clean-up PLL also provides a reference clock for the host processor after system wakeup.

The clock subsystem also has built-in mechanisms for detecting the presence of a crystal and monitoring the quality of the generated clock.

Figure 8-2 describes the clock subsystem.

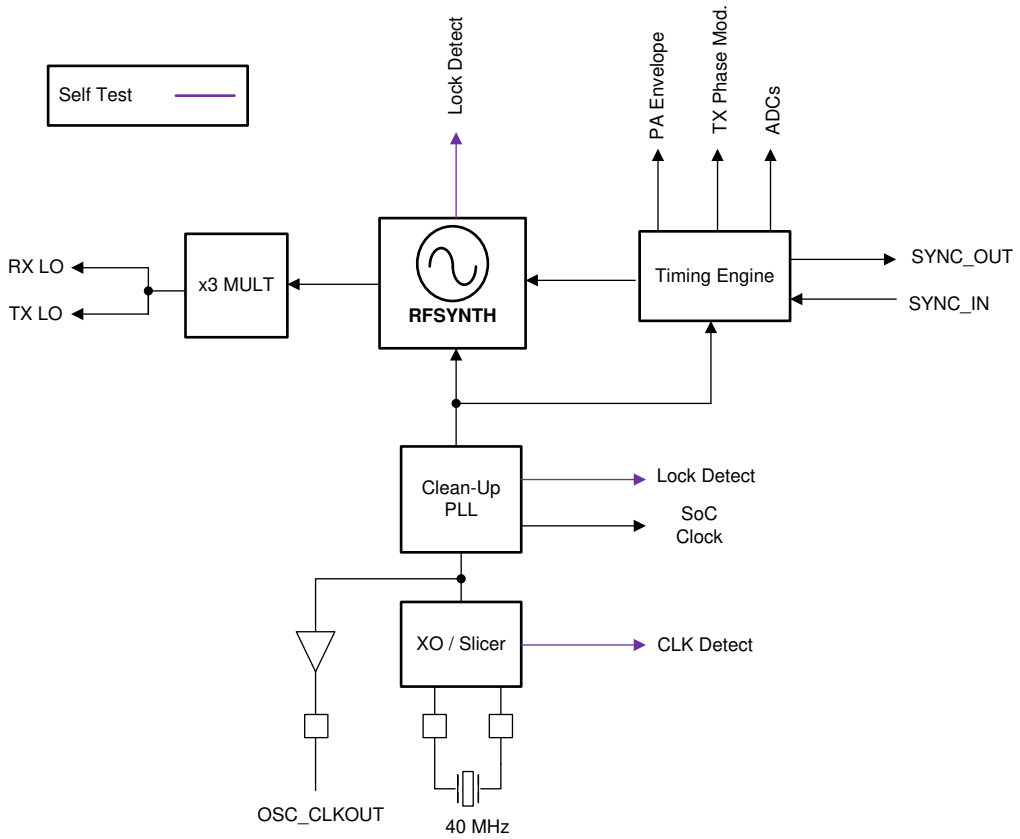

Figure 8-2. Clock Subsystem

8.3.1.2 Transmit Subsystem

The IWR6843 transmit subsystem consists of three parallel transmit chains, each with independent phase and amplitude control. The device supports 6-bit linear phase modulation for MIMO radar, Tx Beam forming applications, and interference mitigation.

The transmit chains also support programmable backoff for system optimization.

Figure 8-3 describes the transmit subsystem.

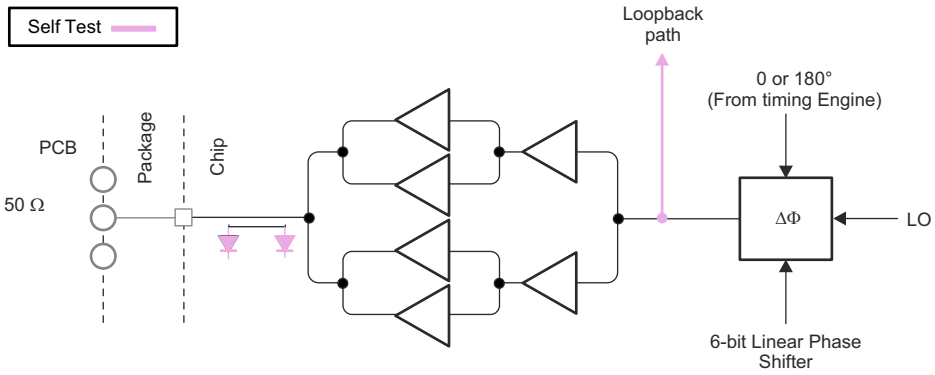

Figure 8-3. Transmit Subsystem (Per Channel)

8.3.1.3 Receive Subsystem

The IWR6843 receive subsystem consists of four parallel channels. A single receive channel consists of an LNA, mixer, IF filtering, ADC conversion, and decimation. All four receive channels can be operational at the same time an individual power-down option is also available for system optimization.

Unlike conventional real-only receivers, the IWR6843 device supports a complex baseband architecture, which uses quadrature mixer and dual IF and ADC chains to provide complex I and Q outputs for each receiver channel. The IWR6843 is targeted for fast chirp systems. The band-pass IF chain has configurable lower cutoff frequencies above 175 kHz and can support bandwidths up to 10 MHz.

Figure 8-4 describes the receive subsystem.

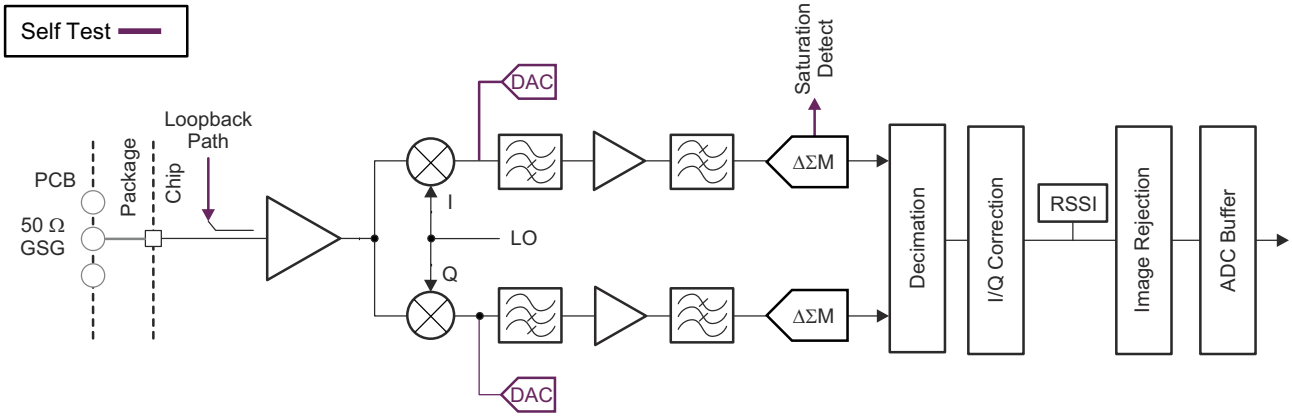

Figure 8-4. Receive Subsystem (Per Channel)

Copyright © 2025 Texas Instruments Incorporated

8.3.2 Processor Subsystem

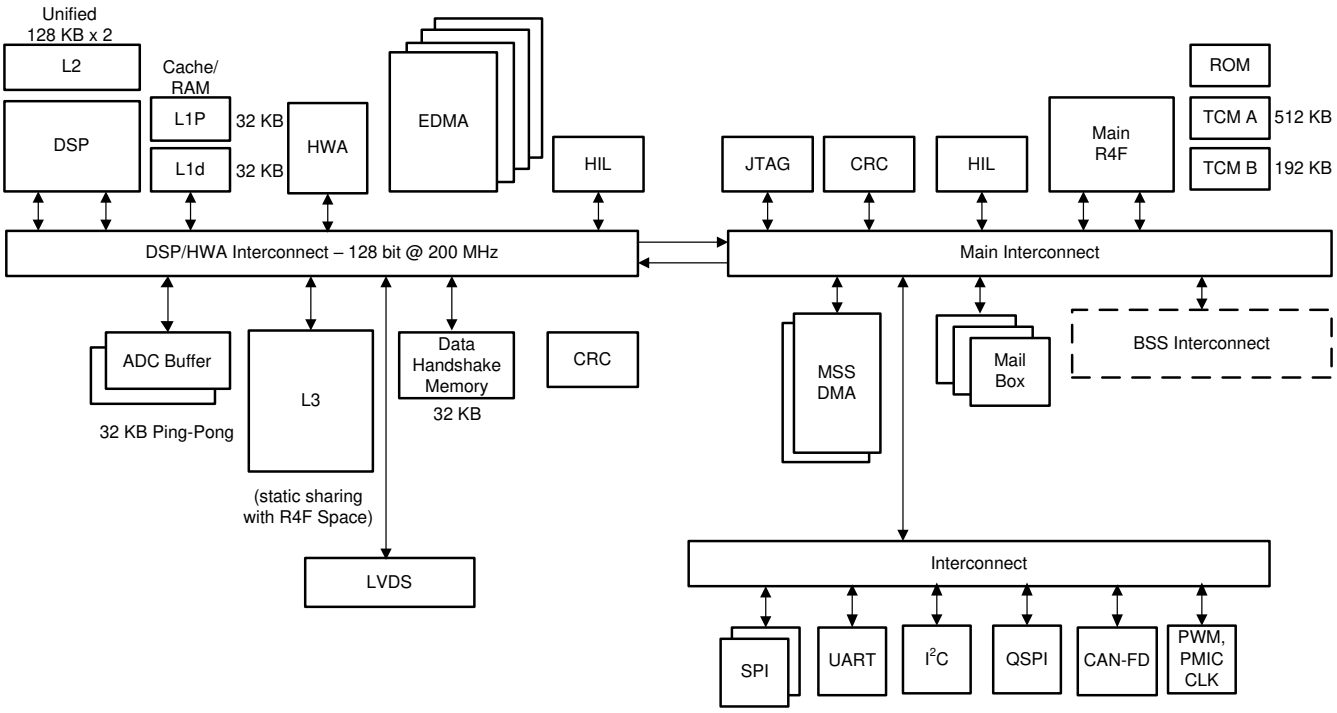

Figure 8-5. Processor Subsystem

Figure 8-5 shows the block diagram for customer programmable processor subsystems in the IWR6843 device. At a high level there are two customer programmable subsystems, as shown separated by a dotted line in the diagram. Left hand side shows the DSP Subsystem which contains TI's high-performance C674x DSP(IWR6843 only), hardware accelerator, a high-bandwidth interconnect for high performance (128-bit, 200MHz), and associated peripherals – four DMAs for data transfer. LVDS interface for Measurement data output, L3 Radar data cube memory, ADC buffers, CRC engine, and data handshake memory (additional memory provided on interconnect).

The C674x DSP and L1/L2 RAM portion of the DSP subsystem is not supported on the IWR6443 device and therefore, the available memory is 1.4MB compared to 1.75MB on the IWR6843 device. For more information on the features supported and not supported on each device, see the Device Features Comparison table.

The right side of the diagram shows the Main subsystem. Main subsystem as name suggests is the brain of the device and controls all the device peripherals and house-keeping activities of the device. Main subsystem contains Cortex-R4F (Main R4F) processor and associated peripherals and house-keeping components such as DMAs, CRC and Peripherals (I^2C, UART, SPIs, CAN, PMIC clocking module, PWM, and others) connected to Main Interconnect through Peripheral Central Resource (PCR interconnect).

Details of the DSP CPU core can be found at https://www.ti.com/product/TMS320C6748.

HIL module is shown in both the subsystems and can be used to perform the radar operations feeding the captured data from outside into the device without involving the RF subsystem. HIL on Main SS is for controlling the configuration and HIL on DSPSS for high speed ADC data input to the device. Both HIL modules uses the same IOs on the device, one additional IO (DMM_MUX_IN) allows selecting either of the two.

8.3.3 Host Interface

The host interface can be provided through a SPI, UART, or CAN-FD interface. In some cases the serial interface for industrial applications is transcoded to a different serial standard.

The IWR6843 device communicates with the host radar processor over the following main interfaces:

- Reference Clock – Reference clock available for host processor after device wakeup
- Control – 4-port standard SPI (peripheral) for host control . All radio control commands (and response) flow through this interface.
- Reset – Active-low reset for device wakeup from host
- Host Interrupt - an indication that the mmwave sensor needs host interface
- Error – Used for notifying the host in case the radio controller detects a fault

8.3.4 Main Subsystem Cortex-R4F

The main system includes an Arm Cortex R4F processor, clock with a maximum operating frequency of 200 MHz. User applications executing on this processor control the overall operation of the device, including radar control through well-defined API messages, radar signal processing (assisted by the radar hardware accelerator), and peripherals for external interfaces.

See the Technical Reference Manual for a complete description and memory map.

8.3.5 DSP Subsystem

The DSP subsystem includes TI's standard TMS320C674x megamodule and several blocks of internal memory (L1P, L1D, and L2). For complete information including memory map, please refer to Technical Reference Manual.

8.3.6 Hardware Accelerator

The Radar Hardware Accelerator (HWA) is an IP that enables off-loading the burden of certain frequently used computations in FMCW radar signal processing from the main processor. FMCW radar signal processing involves the use of FFT and Log-Magnitude computations to obtain a radar image across the range, velocity, and angle dimensions. Some of the frequently used functions in FMCW radar signal processing can be done within the radar hardware accelerator, while still retaining the flexibility of implementing other proprietary algorithms in the main processor. See the Radar Hardware Accelerator User's Guide for a functional description and features of this module and see the Technical Reference Manual for a complete list of register and memory map.

8.4 Other Subsystems

8.4.1 ADC Channels (Service) for User Application

The IWR6843 device includes provision for an ADC service for user application, where the

GPADC engine present inside the device can be used to measure up to six external voltages. The ADC1, ADC2, ADC3, ADC4, ADC5, and ADC6 pins are used for this purpose.

- ADC itself is controlled by TI firmware running inside the BIST subsystem and access to it for customer's external voltage monitoring purpose is via 'monitoring API' calls routed to the BIST subsystem. This API could be linked with the user application running on MSS R4F.
- BIST subsystem firmware will internally schedule these measurements along with other RF and Analog monitoring operations. The API allows configuring the settling time (number of ADC samples to skip) and number of consecutive samples to take. At the end of a frame, the minimum, maximum and average of the readings will be reported for each of the monitored voltages.

GPADC Specifications:

- 625 Ksps SAR ADC
- 0 to 1.8V input range
- 10-bit resolution

Copyright © 2025 Texas Instruments Incorporated

- For 5 out of the 6 inputs, an optional internal buffer (0.4-1.4V input range) is available. Without the buffer, the ADC has a switched capacitor input load modeled with 5pF of sampling capacitance and 12pF parasitic capacitance (GPADC channel 6, the internal buffer is not available).

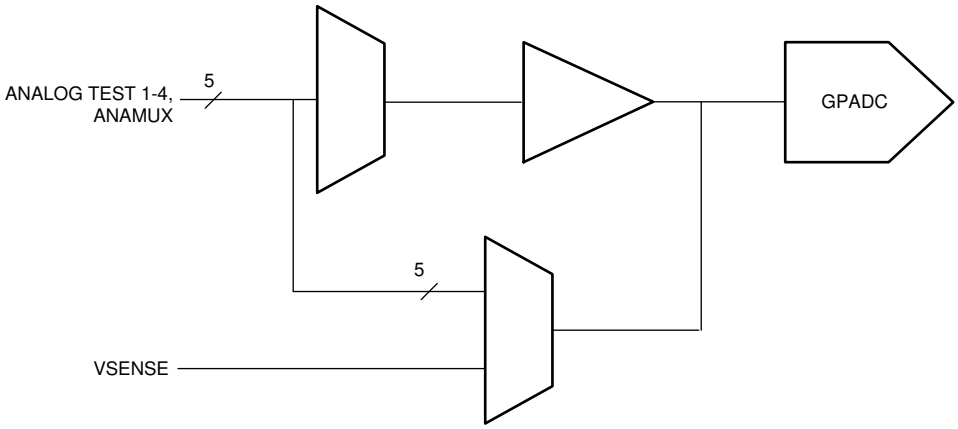

A. GPADC structures are used for measuring the output of internal temperature sensors. The accuracy of these measurements is ±7°C.

Figure 8-6. ADC Path

8.4.1.1 GP-ADC Parameter

PARAMETER	TYP	UNIT
ADC supply	1.8	V
ADC unbuffered input voltage range	0 – 1.8	V
ADC buffered input voltage range(1)	0.4 – 1.3	V
ADC resolution	10	bits
ADC offset error	±5	LSB
ADC gain error	±5	LSB
ADC DNL	–1/+2.5	LSB
ADC INL	±2.5	LSB
ADC sample rate(2)	625	Ksps
ADC sampling time(2)	400	ns
ADC internal cap	10	pF
ADC buffer input capacitance	2	pF
ADC input leakage current	3	uA

(1) Outside of given range, the buffer output will become nonlinear.
(2) ADC itself is controlled by TI firmware running inside the BIST subsystem. For more details please refer to the API calls.

8.5 Boot Modes

As soon as device reset is de-asserted, the R4F processor of the Main (Control) system starts executing its bootloader from an on-chip ROM memory.

The bootloader of the Main system operates in two basic modes and these are specified on the user hardware (Printed Circuit Board) by configuring what are termed as “Sense on Power” (SOP) pins. These pins on the device boundary are scanned by the bootloader firmware and choice of mode for bootloader operation is made.

Table 8-1 enumerates the relevant SOP combinations and how these map to bootloader operation.

Table 8-1. SOP Combinations

SOP2	SOP1	SOP0	BOOTLOADER MODE AND OPERATION
0	0	1	Functional Mode Device Bootloader loads user application from QSPI Serial Flash to internal RAM and switches the control to it
1	0	1	Flashing Mode Device Bootloader spins in loop to allow flashing of user application (or device firmware patch – Supplied by TI) to the serial flash
0	1	1	Debug Mode Bootloader is bypassed and R4F processor is halted. This allows user to connect emulator at a known point

Copyright © 2025 Texas Instruments Incorporated

8.5.1 Flashing Mode

In Flashing Mode, the Main System's bootloader enables the UART driver and expects a data stream comprising of User Application (Binary Image) and Device Firmware (referred to as Device Firmware Patch or Service Pack) from an external flashing utility. Figure 8-7shows the flashing utility executing on a PC platform, but the protocol can be accomplished on an embedded platform as well.

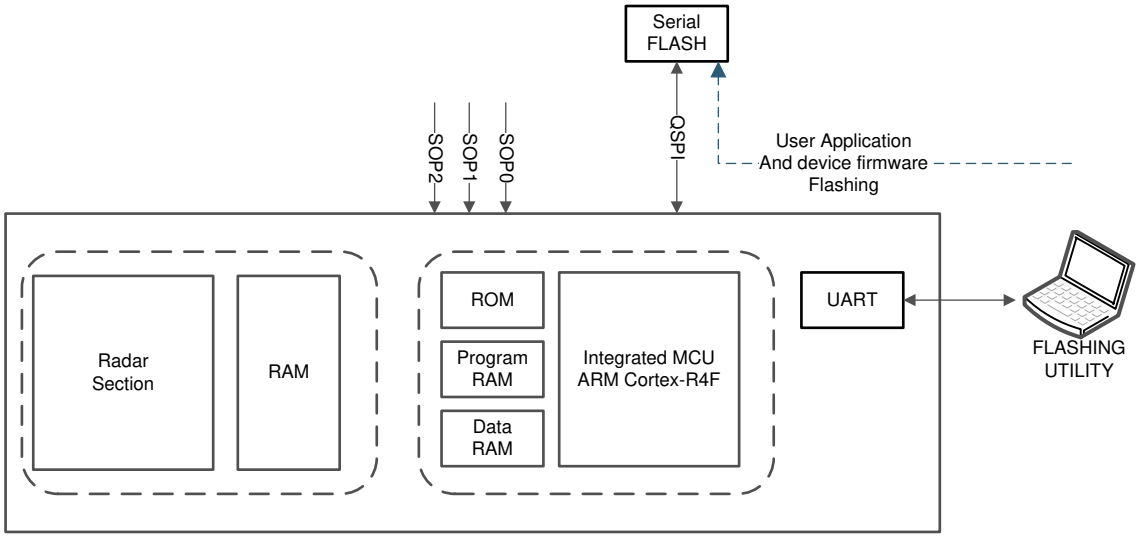

Figure 8-7. Figure 5. Bootloader Flashing Mode

8.5.2 Functional Mode

In Functional Mode, the Main System's bootloader looks for a valid image in the serial flash memory, interfaced over the QSPI port. If a valid image is found, the bootloader transfers the same to Main System's memory subsystem.

If a valid image (or the QSPI Serial Flash is not found), the bootloader initializes the SPI port and awaits for the image transfer. This operation comes handy for configurations where the IWR6843 is interfaced to an external processor which has its own nonvolatile storage hence can store the user application and the IWR6843 device's firmware image.

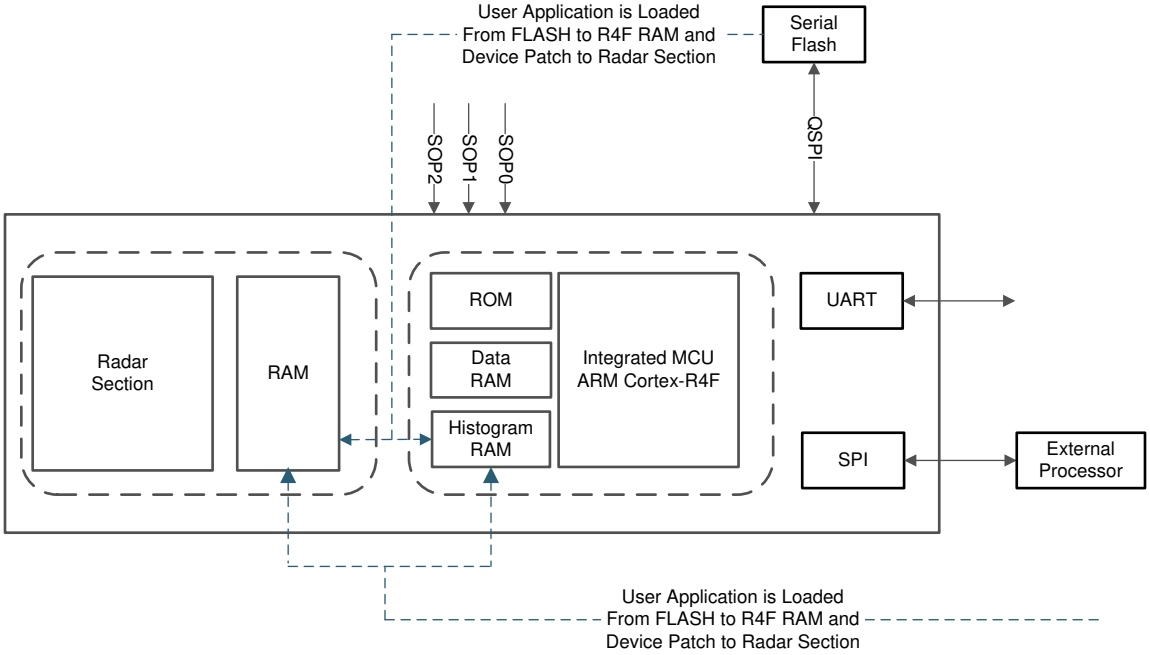

Figure 8-8. Bootloader's Functional Mode

Copyright © 2025 Texas Instruments Incorporated

9 Monitoring and Diagnostics

9.1 Monitoring and Diagnostic Mechanisms

Table 9-1 is a list of the main monitoring and diagnostic mechanisms available in the Functional Safety-Compliant devices

Table 9-1. Monitoring and Diagnostic Mechanisms for Functional Safety-Compliant Devices

NO	FEATURE	DESCRIPTION
1	Boot time LBIST For MSS R4F Core and associated VIM	Device architecture supports hardware logic BIST (LBIST) engine self-test Controller (STC). This logic is used to provide a very high diagnostic coverage (>90%) on the MSS R4F CPU core and Vectored Interrupt Module (VIM) at a transistor level. LBIST for the CPU and VIM need to be triggered by application code before starting the functional safety application. CPU stays there in while loop and does not proceed further if a fault is identified.
2	Boot time PBIST for MSS R4F TCM Memories	MSS R4F has three Tightly coupled Memories (TCM) memories TCMA, TCMB0 and TCMB1. Device architecture supports a hardware programmable memory BIST (PBIST) engine. This logic is used to provide a very high diagnostic coverage (March-13n) on the implemented MSS R4F TCMs at a transistor level. PBIST for TCM memories is triggered by Bootloader at the boot time before starting download of application from Flash or peripheral interface. CPU stays there in while loop and does not proceed further if a fault is identified.
3	End to End ECC for MSS R4F TCM Memories	TCMs diagnostic is supported by Single error correction double error detection (SECDED) ECC diagnostic. An 8-bit code word is used to store the ECC data as calculated over the 64-bit data bus. ECC evaluation is done by the ECC control logic inside the CPU. This scheme provides end-to-end diagnostics on the transmissions between CPU and TCM. CPU can be configured to have predetermined response (Ignore or Abort generation) to single and double bit error conditions.
4	MSS R4F TCM bit multiplexing	Logical TCM word and its associated ECC code is split and stored in two physical SRAM banks. This scheme provides an inherent diagnostic mechanism for address decode failures in the physical SRAM banks. Faults in the bank addressing are detected by the CPU as an ECC fault. Further, bit multiplexing scheme implemented such that the bits accessed to generate a logical (CPU) word are not physically adjacent. This scheme helps to reduce the probability of physical multi-bit faults resulting in logical multi-bit faults; rather they manifest as multiple single bit faults. As the SECDED TCM ECC can correct a single bit fault in a logical word, this scheme improves the usefulness of the TCM ECC diagnostic. Both these features are hardware features and cannot be enabled or disabled by application software.
5	Clock Monitor	Device architecture supports Three Digital Clock Comparators (DCCs) and an internal RCOSC. Dual functionality is provided by these modules – Clock detection and Clock Monitoring. DCCint is used to check the availability/range of Reference clock at boot otherwise the device is moved into limp mode (Device still boots but on 10MHz RCOSC clock source. This provides debug capability). DCCint is only used by boot loader during boot time. It is disabled once the APLL is enabled and locked. DCC1 is dedicated for APLL lock detection monitoring, comparing the APLL output divided version with the Reference input clock of the device. Initially (before configuring APLL), DCC1 is used by bootloader to identify the precise frequency of reference input clock against the internal RCOSC clock source. Failure detection for DCC1 would cause the device to go into limp mode. DCC2 module is one which is available for user software . From the list of clock options given in detailed spec, any two clocks can be compared. One example usage is to compare the CPU clock with the Reference or internal RCOSC clock source. Failure detection is indicated to the MSS R4F CPU via Error Signaling Module (ESM).
7	RTI/WD for MSS R4F	Device architecture supports the use of an internal watchdog that is implemented in the real-time interrupt (RTI) module. The internal watchdog has two modes of operation: digital watchdog (DWD) and digital windowed watchdog (DWWD). The modes of operation are mutually exclusive; the designer can elect to use one mode or the other but not both at the same time. Watchdog can issue either an internal (warm) system reset or a CPU non-mask able interrupt upon detection of a failure. The Watchdog is enabled by the bootloader in DWD mode at boot time to track the boot process. Once the application code takes up the control, Watchdog can be configured again for mode and timings based on specific customer requirements.

Copyright © 2025 Texas Instruments Incorporated

Table 9-1. Monitoring and Diagnostic Mechanisms for Functional Safety-Compliant Devices (continued)

NO	FEATURE	DESCRIPTION
8	MPU for MSS R4F	Cortex-R4F CPU includes an MPU. The MPU logic can be used to provide spatial separation of software tasks in the device memory. Cortex-R4F MPU supports 12 regions. It is expected that the operating system controls the MPU and changes the MPU settings based on the needs of each task. A violation of a configured memory protection policy results in a CPU abort.
9	PBIST for Peripheral interface SRAMs - SPIs, CANs	Device architecture supports a hardware programmable memory BIST (PBIST) engine for Peripheral SRAMs as well. PBIST for peripheral SRAM memories can be triggered by the application. User can elect to run the PBIST on one SRAM or on groups of SRAMs based on the execution time, which can be allocated to the PBIST diagnostic. The PBIST tests are destructive to memory contents, and as such are typically run only at boot time. However, the user has the freedom to initiate the tests at any time if peripheral communication can be hindered. Any fault detected by the PBIST results in an error indicated in PBIST status registers.
10	ECC for Peripheral interface SRAMs – SPIs, CANs	Peripheral interface SRAMs diagnostic is supported by Single error correction double error detection (SECDED) ECC diagnostic. When a single or double bit error is detected the MSS R4F is notified via ESM (Error Signaling Module). This feature is disabled after reset. Software must configure and enable this feature in the peripheral and ESM module. ECC failure (both single bit corrected and double bit uncorrectable error conditions) is reported to the MSS R4F as an interrupt via ESM module.
11	Configuration registers protection for Main SS peripherals	All the Main SS peripherals (SPIs, CANs, I2C, DMAs, RTI/WD, DCCs, IOMUX etc.) are connected to interconnect via Peripheral Central resource (PCR). This provides two diagnostic mechanisms that can limit access to peripherals. Peripherals can be clock gated per peripheral chip select in the PCR. This can be utilized to disable unused features such that they cannot interfere. In addition, each peripheral chip select can be programmed to limit access based on privilege level of transaction. This feature can be used to limit access to entire peripherals to privileged operating system code only. These diagnostic mechanisms are disabled after reset. Software must configure and enable these mechanisms. Protection violation also generates an ‘error’ that result in abort to MSS R4F or error response to other peripherals such as DMAs.
12	Cyclic Redundancy Check – Main SS	Device architecture supports hardware CRC engine on Main SS implementing the below polynomials. • CRC16 CCITT – 0x10 • CRC32 Ethernet – 0x04C11DB7 • CRC64 • CRC 32C – CASTAGNOLI – 0x1EDC6F4 • CRC32P4 – E2E Profile4 – 0xF4ACFB1 • CRC-8 – H2F Autosar – 0x2F • CRC-8 – VDA CAN – 0x1D The read operation of the SRAM contents to the CRC can be done by CPU or by DMA. The comparison of results, indication of fault, and fault response are the responsibility of the software managing the test.
13	MPU for DMAs	Device architecture supports MPUs on Main SS DMAs. Failure detection by MPU is reported to the MSS R4F CPU core as an interrupt via ESM. DSPSS’s high performance EDMAs also includes MPUs on both read and write ports. EDMA MPUs supports 8 regions. Failure detection by MPU is reported to the DSP core as an interrupt via local ESM.
14	Boot time LBIST For BIST R4F Core and associated VIM	Device architecture supports hardware logic BIST (LBIST) even for BIST R4F core and associated VIM module. This logic provides very high diagnostic coverage (>90%) on the BIST R4F CPU core and VIM. This is triggered by MSS R4F boot loader at boot time and it does not proceed further if the fault is detected.
15	Boot time PBIST for BIST R4F TCM Memories	Device architecture supports a hardware programmable memory BIST (PBIST) engine for BIST R4F TCMs which provide a very high diagnostic coverage (March-13n) on the BIST R4F TCMs. PBIST is triggered by MSS R4F Bootloader at the boot time and it does not proceed further if the fault is detected.

Copyright © 2025 Texas Instruments Incorporated

Table 9-1. Monitoring and Diagnostic Mechanisms for Functional Safety-Compliant Devices (continued)

NO	FEATURE	DESCRIPTION
16	End to End ECC for BIST R4F TCM Memories	BIST R4F TCMs diagnostic is supported by Single error correction double error detection (SECDED) ECC diagnostic. Single bit error is communicated to the BIST R4FCPU while double bit error is communicated to MSS R4F as an interrupt so that application code becomes aware of this and takes appropriate action.
17	BIST R4F TCM bit multiplexing	Logical TCM word and its associated ECC code is split and stored in two physical SRAM banks. This scheme provides an inherent diagnostic mechanism for address decode failures in the physical SRAM banks and helps to reduce the probability of physical multi-bit faults resulting in logical multi-bit faults.
18	RTI/WD for BIST R4F	Device architecture supports an internal watchdog for BIST R4F. Timeout condition is reported via an interrupt to MSS R4F and rest is left to application code to either go for SW reset for BIST SS or warm reset for the device to come out of faulty condition.
19	Boot time PBIST for L1P, L1D, L2 and L3 Memories	Device architecture supports a hardware programmable memory BIST (PBIST) engine for DSPSS's L1P, L1D, L2 and L3 memories which provide a very high diagnostic coverage (March-13n). PBIST is triggered by MSS R4F Bootloader at the boot time and it does not proceed further if the fault is detected.
20	Parity on L1P	Device architecture supports Parity diagnostic on DSP's L1P memory. Parity error is reported to the CPU as an interrupt. Note:- L1D memory is not covered by parity or ECC and need to be covered by application level diagnostics.
21	ECC on DSP's L2 Memory	Device architecture supports both Parity Single error correction double error detection (SECDED) ECC diagnostic on DSP's L2 memory. L2 Memory is a unified 256KB of memory used to store program and Data sections for the DSP. A 12-bit code word is used to store the ECC data as calculated over the 256-bit data bus (logical instruction fetch size). The ECC logic for the L2 access is located in the DSP and evaluation is done by the ECC control logic inside the DSP. This scheme provides end-to-end diagnostics on the transmissions between DSP and L2. Byte aligned Parity mechanism is also available on L2 to take care of data section.
22	ECC on Radar Data Cube (L3) Memory	L3 memory is used as Radar data section in Device. Device architecture supports Single error correction double error detection (SECDED) ECC diagnostic on L3 memory. An 8-bit code word is used to store the ECC data as calculated over the 64-bit data bus. Failure detection by ECC logic is reported to the MSS R4F CPU core as an interrupt via ESM.
23	RTI/WD for DSP Core	Device architecture supports the use of an internal watchdog for BIST R4F that is implemented in the real-time interrupt (RTI) module – replication of same module as used in Main SS. This module supports same features as that of RTI/WD for MSS/BIST R4F. This watchdog is enabled by customer application code and Timeout condition is reported via an interrupt to MSS R4F and rest is left to application code in MSS R4F to either go for SW reset for DSP SS or warm reset for the device to come out of faulty condition.
24	CRC for DSP Sub-System	Device architecture supports dedicated hardware CRC on DSPSS implementing the below polynomials. • CRC16 CCITT - 0x10 • CRC32 Ethernet - 0x04C11DB7 • CRC64 The read of SRAM contents to the CRC can be done by DSP CPU or by DMA. The comparison of results, indication of fault, and fault response are the responsibility of the software managing the test.
25	MPU for DSP	Device architecture supports MPUs for DSP memory accesses (L1D, L1P, and L2). L2 memory supports 64 regions and 16 regions for L1P and L1D each. Failure detection by MPU is reported to the DSP core as an abort.
26	Temperature Sensors	Device architecture supports various temperature sensors all across the device (next to power hungry modules such as PAs, DSP etc) which is monitored during the inter-frame period.(1)
27	Tx Power Monitors	Device architecture supports power detectors at the Tx output.(2)

Table 9-1. Monitoring and Diagnostic Mechanisms for Functional Safety-Compliant Devices (continued)

NO	FEATURE	DESCRIPTION
28	Error Signaling Error Output	When a diagnostic detects a fault, the error must be indicated. The device architecture provides aggregation of fault indication from internal monitoring/diagnostic mechanisms using a peripheral logic known as the Error Signaling Module (ESM). The ESM provides mechanisms to classify errors by severity and to provide programmable error response. ESM module is configured by customer application code and specific error signals can be enabled or masked to generate an interrupt (Low/High priority) for the MSS R4F CPU. device supports Nerror output signal (IO) which can be monitored externally to identify any kind of high severity faults in the design which could not be handled by the R4F.
29	Synthesizer (Chirp) frequency monitor	Monitors Synthesizer's frequency ramp by counting (divided-down) clock cycles and comparing to ideal frequency ramp. Excess frequency errors above a certain threshold, if any, are detected and reported.
30	Ball break detection for TX ports (TX Ball break monitor)	Device architecture supports a ball break detection mechanism based on Impedance measurement at the TX output(s) to detect and report any large deviations that can indicate a ball break. Monitoring is done by TIs code running on BIST R4F and failure is reported to the MSS R4F via Mailbox. It is completely up to customer SW to decide on the appropriate action based on the message from BIST R4F.
31	RX loopback test	Built-in TX to RX loopback to enable detection of failures in the RX path(s), including Gain, inter-RX balance, etc.
32	IF loopback test	Built-in IF (square wave) test tone input to monitor IF filter's frequency response and detect failure.
33	RX saturation detect	Provision to detect ADC saturation due to excessive incoming signal level and/or interference.
34	Boot time LBIST for DSP core	Device supports boot time LBIST for the DSP Core. LBIST can be triggered by the MSS R4F application code during boot time.

(1) Monitoring is done by TI's code running on BIST R4F.
There are two modes in which it could be configured to report the temperature sensed via API by customer application.
   a. Report the temperature sensed after every N frames
   b. Report the condition once the temperature crosses programmed threshold.

It is completely up to customer SW to decide on the appropriate action based on the message from BIST R4Fvia Mailbox.

(2) Monitoring is done by the TI's code running on BIST R4F.
There are two modes in which it could be configured to report the detected output power via API by customer application.
   a. Report the power detected after every N frames
   b. Report the condition once the output power degrades by more than configured threshold from the configured.

It is completely up to customer SW to decide on the appropriate action based on the message from BIST R4F.

Note

Refer to the Device Safety Manual or other relevant collaterals for more details on applicability of all diagnostics mechanisms. For Certification details, refer to the Device product folder.

Copyright © 2025 Texas Instruments Incorporated

9.1.1 Error Signaling Module

When a diagnostic detects a fault, the error must be indicated. IWR6843 architecture provides aggregation of fault indication from internal diagnostic mechanisms using a peripheral logic known as the error signaling module (ESM). The ESM provides mechanisms to classify faults by severity and allows programmable error response. Below is the high level block diagram for ESM module.

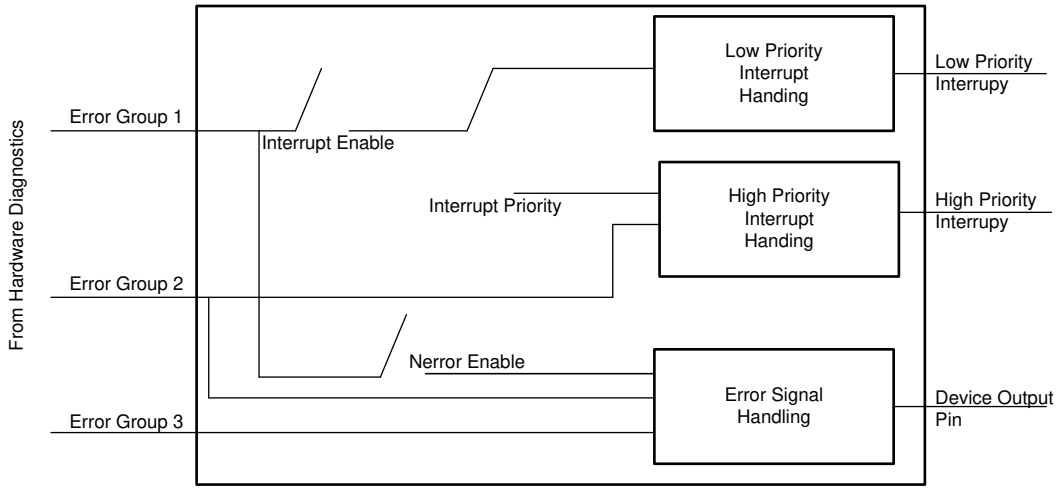

Figure 9-1. ESM Module Diagram

10 Applications, Implementation, and Layout

Note

Information in the following Applications section is not part of the TI component specification, and TI does not warrant its accuracy or completeness. TI's customers are responsible for determining suitability of components for their purposes. Customers should validate and test their design implementation to confirm system functionality.

10.1 Application Information

Application information can be found on IWR Application web page.

10.2 Reference Schematic

Please check the device product page for latest Hardware design information under Design Kits - typically, at Design & development.

Listed for convenience are: Design Files, Schematics, Layouts, and Stack up for PCB.

- Altium XWR6843 EVM Design Files
- XWR6843 EVM Schematic Drawing, Assembly Drawing, and Bill of Materials

Copyright © 2025 Texas Instruments Incorporated

11 Device and Documentation Support

TI offers an extensive line of development tools. Tools and software to evaluate the performance of the device, generate code, and develop solutions follow.

11.1 Device Nomenclature

To designate the stages in the product development cycle, TI assigns prefixes to the part numbers of all microprocessors (MPUs) and support tools. Each device has one of three prefixes: X, P, or null (no prefix) (for example, *IWR6843*). Texas Instruments recommends two of three possible prefix designators for its support tools: TMDX and TMDS. These prefixes represent evolutionary stages of product development from engineering prototypes (TMDX) through fully qualified production devices and tools (TMDS).

Device development evolutionary flow:

X Experimental device that is not necessarily representative of the final device's electrical specifications and may not use production assembly flow.

P Prototype device that is not necessarily the final silicon die and may not necessarily meet final electrical specifications.

null Production version of the silicon die that is fully qualified.

Support tool development evolutionary flow:

TMDX Development-support product that has not yet completed Texas Instruments internal qualification testing.

TMDS Fully-qualified development-support product.

X and P devices and TMDX development-support tools are shipped against the following disclaimer:

"Developmental product is intended for internal evaluation purposes."

Production devices and TMDS development-support tools have been characterized fully, and the quality and reliability of the device have been demonstrated fully. TI's standard warranty applies.

Predictions show that prototype devices (X or P) have a greater failure rate than the standard production devices. Texas Instruments recommends that these devices not be used in any production system because their expected end-use failure rate still is undefined. Only qualified production devices are to be used.

TI device nomenclature also includes a suffix with the device family name. This suffix indicates the package type (for example, ABL0161), the temperature range (for example, blank is the default commercial temperature range). Figure 11-1 provides a legend for reading the complete device name for any *IWR6843* device.

For orderable part numbers of *IWR6843* devices in the ABL0161 package types, see the Package Option Addendum of this document , the TI website (www.ti.com), or contact your TI sales representative.

For additional description of the device nomenclature markings on the die, see the *IWR6843, IWR6443 Device Errata*.

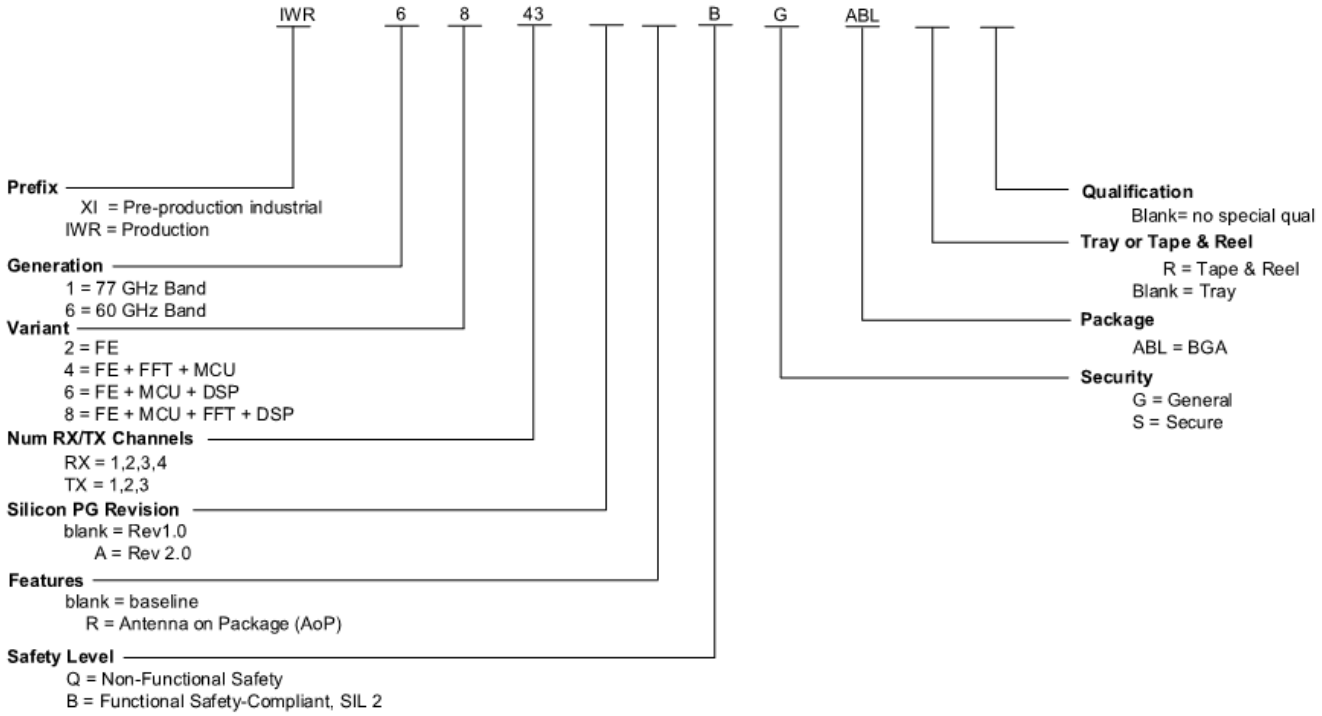

Figure 11-1. Device Nomenclature

11.2 Tools and Software

Models

IWR6843 BSDL model	Boundary scan database of testable input and output pins for IEEE 1149.1 of the specific device.
IWR6843 IBIS model	IO buffer information model for the IO buffers of the device. For simulation on a circuit board, see IBIS Open Forum.
IWR6843 checklist for schematic review, layout review, bringup/wakeup	A set of steps in spreadsheet form to select system functions and pinmux options. Specific EVM schematic and layout notes to apply to customer engineering. A bringup checklist is suggested for customers.

11.3 Documentation Support

To receive notification of documentation updates, navigate to the device product folder on ti.com. Click on *Notifications* to register and receive a weekly digest of any product information that has changed. For change details, review the revision history included in any revised document.

The current documentation that describes the DSP, related peripherals, and other technical collateral follows.

Errata

IWR6843, IWR6443 device errata	Describes known advisories, limitations, and cautions on silicon and provides workarounds.

11.4 Support Resources

TI E2E™ support forums are an engineer's go-to source for fast, verified answers and design help — straight from the experts. Search existing answers or ask your own question to get the quick design help you need.

Linked content is provided "AS IS" by the respective contributors. They do not constitute TI specifications and do not necessarily reflect TI's views; see TI's Terms of Use.

Copyright © 2025 Texas Instruments Incorporated

11.5 Trademarks

TI E2E™ is a trademark of Texas Instruments.
Arm® and Cortex® are registered trademarks of ARM Limited.
All trademarks are the property of their respective owners.

11.6 Electrostatic Discharge Caution

This integrated circuit can be damaged by ESD. Texas Instruments recommends that all integrated circuits be handled with appropriate precautions. Failure to observe proper handling and installation procedures can cause damage.

ESD damage can range from subtle performance degradation to complete device failure. Precision integrated circuits may be more susceptible to damage because very small parametric changes could cause the device not to meet its published specifications.

11.7 Glossary

TI Glossary	This glossary lists and explains terms, acronyms, and definitions.

12 Revision History

Changes from Revision E (June 2021) to Revision F (April 2025) **Page**

- *(Applications) :*Application links updated....2
- *(Device Comparison):* IWRL6432 and IWRL1432 devices added....5
- *(Signal Descriptions) :*Updated/Changed CLKP and CLKM descriptions....16
- (VPP Specification for One-Time Programmable (OTP) eFuses): New section added....26
- (Power Save Mode): New section added....26
- (Device Wake-Up Sequence): Logic diagram updated....34
- *(Table. Crystal Electrical Characteristics (Oscillator Mode):* Updated crystal frequency tolerance to –200ppm to +200ppm....36
- *(QSPI Switching Characteristics):* Updated cycle time, sclk to 12.5ns....52
- *(Boot Modes)*: Added Boot Modes section....63
- *(Monitoring and Diagnostic Mechanisms)*:Added Device Safety Manual note....67

Copyright © 2025 Texas Instruments Incorporated

Changes from October 1, 2020 to June 30, 2021 (from Revision D (Oct 2020) to Revision E (June 2021)) **Page**

- *Global*: Updated to reflect Functional Safety-Compliance.....1
- *Global*: Updated/Changed Master Subsystem to Main Subsystem and Master R4F to MSS R4F..... 1
- *Global*: Updated/Changed A2D to ADC..... 1
- *(Features)* : Updated Functional-Safety Compliance Certification Collateral..... 1
- (*Device Information*) : Added additional Secure production parts for IWR6843.....2
- Updated/Changed *Functional Block Diagram* 3
- *(Device Comparison)*:Updated/Changed SIL row to reflect Functional Safety-Compliance for IWR6843..... 5
- *(Device Comparison)*: Added a table-note about LVDS and Non-Functional Safety Variant Information..... 5
- *(Device Comparison)*: Updated/Changed the IWR6843AOP Product status from "AI" to "PD" 5
- *(Device Comparison):* IWRL6432 and IWRL6432AOP devices added..... 5
- *(Device Comparison):* IWRL1432 device added..... 5
- *(Device Comparison):* IWRL1432 device added..... 5
- *(Absolute Maximum Ratings)*: Added entries for externally supplied power on the RF inputs (TX and RX) and a table-note for the signal level applied on TX..... 26
- *(ESD Ratings)*: Changed HBM ESD value from ±1000 V to ±2000 V, CDM ESD value from ±250 V to ±500 V and added footnote about corner pins.....26
- *Transmit Subsystem (Per Channel)*: Updated/Changed figure.....60
- Updated/changed "Master" to "Main" in *Processor Subsystem* image.....61
- *(Monitoring and Diagnostic Mechanisms)*: Updated/Changed table header and description to reflect Functional Safety-Compliance.....67
- *(Monitoring and Diagnostic Mechanisms)*: Updated/Changed Master R4F to MSS R4F and Master SS to Main SS..... 67
- *(Device Nomenclature)*:Updated/changed figure to reflect Functional Safety-Compliance, SIL 2 for Safety Level B.....73
- *(Tray Information for ABL, 10.4 × 10.4 mm)*: Added tray information for secure parts..... 82

13 Mechanical, Packaging, and Orderable Information

13.1 Packaging Information

The following pages include mechanical, packaging, and orderable information. This information is the most current data available for the designated devices. This data is subject to change without notice and revision of this document. For browser-based versions of this data sheet, refer to the left-hand navigation.

Copyright © 2025 Texas Instruments Incorporated

PACKAGE OUTLINE

ABL0161B

FCBGA - 1.17 mm max height

PLASTIC BALL GRID ARRAY

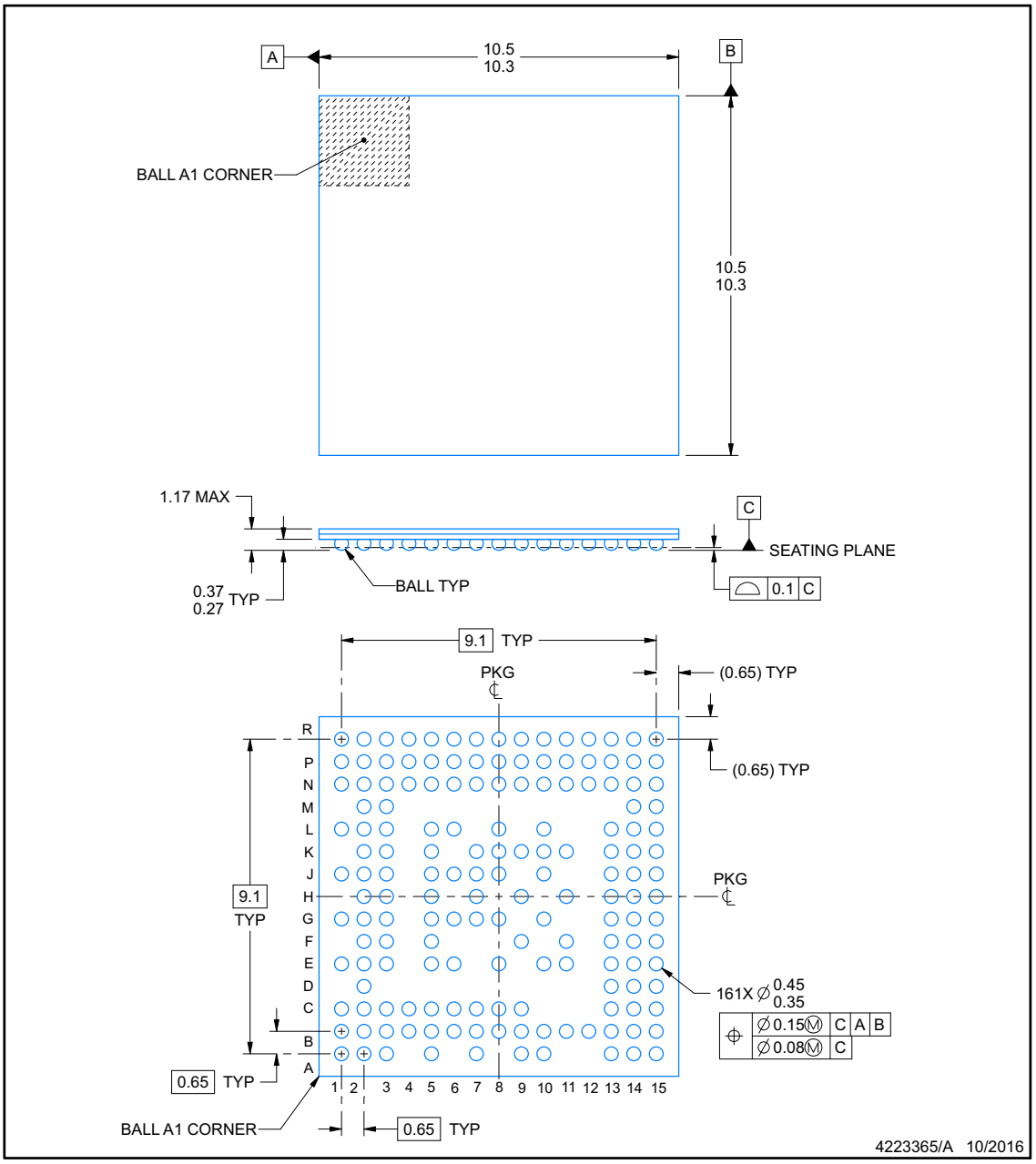

NOTES:

1. All linear dimensions are in millimeters. Any dimensions in parenthesis are for reference only. Dimensioning and tolerancing per ASME Y14.5M.
2. This drawing is subject to change without notice.

Copyright © 2025 Texas Instruments Incorporated

EXAMPLE BOARD LAYOUT

ABL0161B

FCBGA - 1.17 mm max height

PLASTIC BALL GRID ARRAY

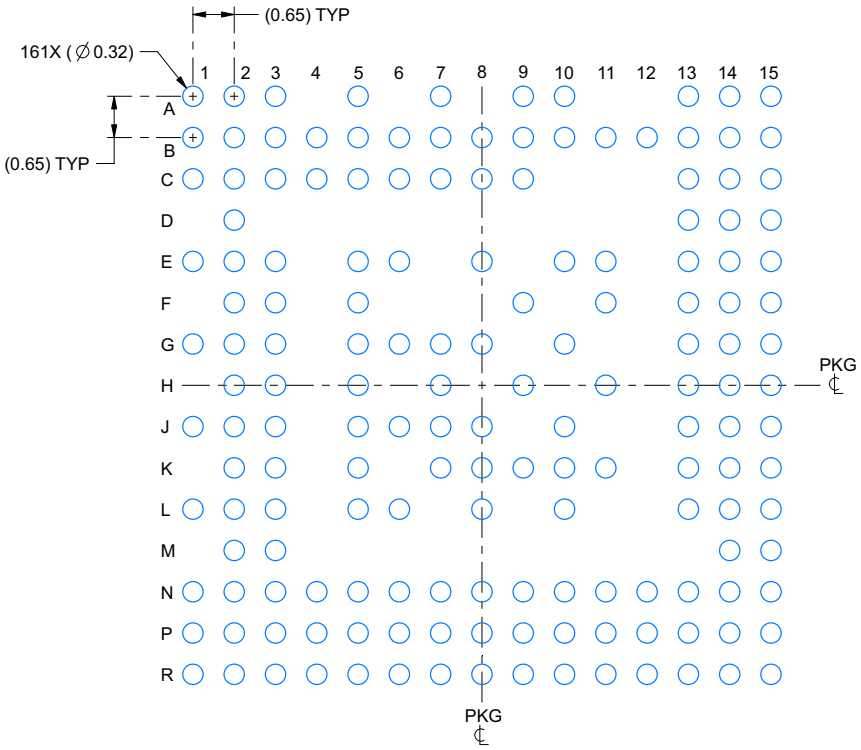

LAND PATTERN EXAMPLE
SCALE:10X

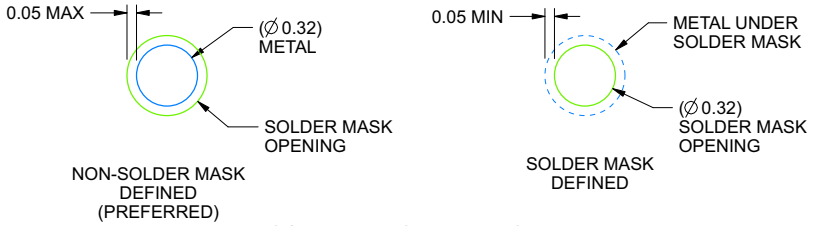

SOLDER MASK DETAILS
NOT TO SCALE

4223365/A 10/2016

NOTES: (continued)

3. Final dimensions may vary due to manufacturing tolerance considerations and also routing constraints. For information, see Texas Instruments literature number SPRAA99 (www.ti.com/lit/spraa99).

Copyright © 2025 Texas Instruments Incorporated

EXAMPLE STENCIL DESIGN

ABL0161B

FCBGA - 1.17 mm max height

PLASTIC BALL GRID ARRAY

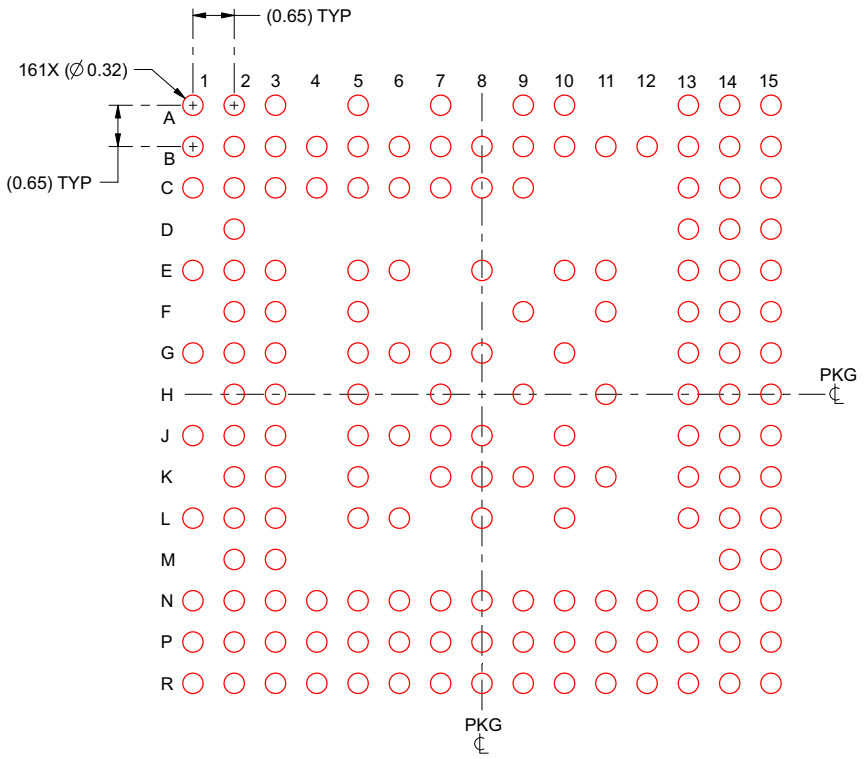

SOLDER PASTE EXAMPLE
BASED ON 0.125 mm THICK STENCIL
SCALE:10X

4223365/A 10/2016

NOTES: (continued)

4. Laser cutting apertures with trapezoidal walls and rounded corners may offer better paste release.

Copyright © 2025 Texas Instruments Incorporated

13.2 Tray Information for ABL, 10.4 × 10.4 mm

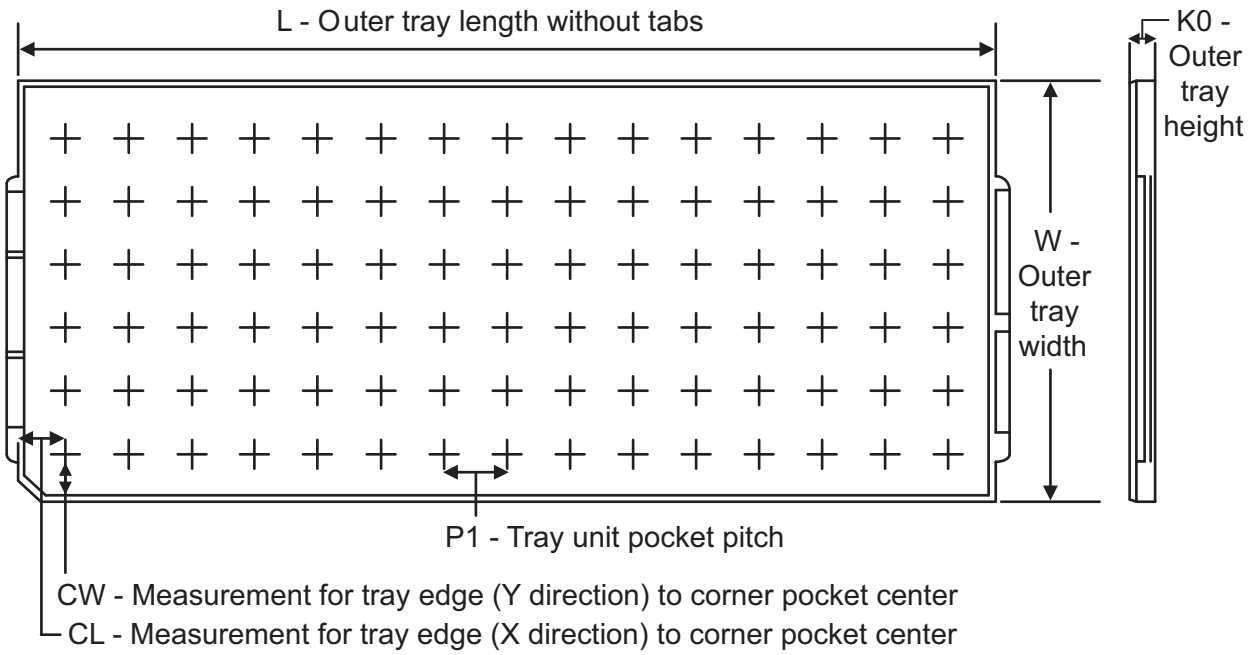

Chamfer on Tray corner indicates Pin 1 orientation of packed units.

Device	Package Type	Package Name	Pins	SPQ	Unit Array Matrix	Max Temp. (°C)	L (mm)	W (mm)	K0 (mm)	P1 (mm)	CL (mm)	CW (mm)
IWR6443AQGABL	FC/CSP	ABL	161	176	8 × 22	150	315.0	135.9	7.62	13.40	16.80	17.20
IWR6843AQGABL	FC/CSP	ABL	161	176	8 × 22	150	315.0	135.9	7.62	13.40	16.80	17.20
IWR6843AQSABL	FC/CSP	ABL	161	176	8 × 22	150	315.0	135.9	7.62	13.40	16.80	17.20
IWR6843ABGABL	FC/CSP	ABL	161	176	8 × 22	150	315.0	135.9	7.62	13.40	16.80	17.20
IWR6843ABSABL	FC/CSP	ABL	161	176	8 × 22	150	315.0	135.9	7.62	13.40	16.80	17.20

Copyright © 2025 Texas Instruments Incorporated

PACKAGING INFORMATION

Orderable part number	Status (1)	Material type (2)	Package | Pins	Package qty | Carrier	RoHS (3)	Lead finish/ Ball material (4)	MSL rating/ Peak reflow (5)	Op temp (°C)	Part marking (6)
IWR6443AQGABL	Active	Production	FCCSP (ABL) | 161	176 | JEDEC TRAY (10+1)	Yes	Call TI | Snagcu	Level-3-260C-168 HR	-40 to 105	IWR6443 QG 678A (678A ABL, 678 A ABL)
IWR6443AQGABL.B	Active	Production	FCCSP (ABL) | 161	176 | JEDEC TRAY (10+1)	Yes	Call TI	Level-3-260C-168 HR	-40 to 105	IWR6443 QG 678A (678A ABL, 678 A ABL)
IWR6443AQGABLR	Active	Production	FCCSP (ABL) | 161	1000 | LARGE T&R	Yes	Call TI | Snagcu	Level-3-260C-168 HR	-40 to 105	IWR6443 QG 678A (678A ABL, 678 A ABL)
IWR6443AQGABLR.B	Active	Production	FCCSP (ABL) | 161	1000 | LARGE T&R	Yes	Call TI	Level-3-260C-168 HR	-40 to 105	IWR6443 QG 678A (678A ABL, 678 A ABL)
IWR6843ABGABL	Active	Production	FCCSP (ABL) | 161	176 | JEDEC TRAY (5+1)	Yes	Call TI | Snagcu	Level-3-260C-168 HR	-40 to 105	IWR6843 BG 678A (678A ABL, 678 A ABL)
IWR6843ABGABL.B	Active	Production	FCCSP (ABL) | 161	176 | JEDEC TRAY (5+1)	Yes	Call TI	Level-3-260C-168 HR	-40 to 105	IWR6843 BG 678A (678A ABL, 678 A ABL)
IWR6843ABGABLR	Active	Production	FCCSP (ABL) | 161	1000 | LARGE T&R	Yes	Call TI | Snagcu	Level-3-260C-168 HR	-40 to 105	IWR6843 BG 678A (678A ABL, 678 A ABL)

Orderable part number	Status (1)	Material type (2)	Package | Pins	Package qty | Carrier	RoHS (3)	Lead finish/ Ball material (4)	MSL rating/ Peak reflow (5)	Op temp (°C)	Part marking (6)
IWR6843ABGABLR.B	Active	Production	FCCSP (ABL) | 161	1000 | LARGE T&R	Yes	Call TI	Level-3-260C-168 HR	-40 to 105	IWR6843 BG 678A (678A ABL, 678 A ABL)
IWR6843AQGABL	Active	Production	FCCSP (ABL) | 161	176 | JEDEC TRAY (10+1)	Yes	Call TI | Snagcu	Level-3-260C-168 HR	-40 to 105	IWR6843 QG 678A (678A ABL, 678 A ABL)
IWR6843AQGABL.B	Active	Production	FCCSP (ABL) | 161	176 | JEDEC TRAY (10+1)	Yes	Call TI	Level-3-260C-168 HR	-40 to 105	IWR6843 QG 678A (678A ABL, 678 A ABL)
IWR6843AQGABLR	Active	Production	FCCSP (ABL) | 161	1000 | LARGE T&R	Yes	Call TI | Snagcu	Level-3-260C-168 HR	-40 to 105	IWR6843 QG 678A (678A ABL, 678 A ABL)
IWR6843AQGABLR.B	Active	Production	FCCSP (ABL) | 161	1000 | LARGE T&R	Yes	Call TI	Level-3-260C-168 HR	-40 to 105	IWR6843 QG 678A (678A ABL, 678 A ABL)
IWR6843AQSABL	Active	Production	FCCSP (ABL) | 161	176 | JEDEC TRAY (10+1)	Yes	Call TI | Snagcu	Level-3-260C-168 HR	-40 to 105	IWR6843 QS 678A (678A ABL, 678 A ABL)
IWR6843AQSABLR	Active	Production	FCCSP (ABL) | 161	1000 | LARGE T&R	Yes	Call TI | Snagcu	Level-3-260C-168 HR	-40 to 105	IWR6843 QS 678A (678A ABL, 678 A ABL)

(1) **Status:** For more details on status, see our product life cycle.

(2) **Material type:** When designated, preproduction parts are prototypes/experimental devices, and are not yet approved or released for full production. Testing and final process, including without limitation quality assurance, reliability performance testing, and/or process qualification, may not yet be complete, and this item is subject to further changes or possible discontinuation. If available for ordering, purchases will be subject to an additional waiver at checkout, and are intended for early internal evaluation purposes only. These items are sold without warranties of any kind.

(3) **RoHS values:** Yes, No, RoHS Exempt. See the TI RoHS Statement for additional information and value definition.

(4) **Lead finish/Ball material:** Parts may have multiple material finish options. Finish options are separated by a vertical ruled line. Lead finish/Ball material values may wrap to two lines if the finish value exceeds the maximum column width.

(5) **MSL rating/Peak reflow:** The moisture sensitivity level ratings and peak solder (reflow) temperatures. In the event that a part has multiple moisture sensitivity ratings, only the lowest level per JEDEC standards is shown. Refer to the shipping label for the actual reflow temperature that will be used to mount the part to the printed circuit board.

(6) **Part marking:** There may be an additional marking, which relates to the logo, the lot trace code information, or the environmental category of the part.

Multiple part markings will be inside parentheses. Only one part marking contained in parentheses and separated by a "~" will appear on a part. If a line is indented then it is a continuation of the previous line and the two combined represent the entire part marking for that device.

Important Information and Disclaimer: The information provided on this page represents TI's knowledge and belief as of the date that it is provided. TI bases its knowledge and belief on information provided by third parties, and makes no representation or warranty as to the accuracy of such information. Efforts are underway to better integrate information from third parties. TI has taken and continues to take reasonable steps to provide representative and accurate information but may not have conducted destructive testing or chemical analysis on incoming materials and chemicals. TI and TI suppliers consider certain information to be proprietary, and thus CAS numbers and other limited information may not be available for release.

In no event shall TI's liability arising out of such information exceed the total purchase price of the TI part(s) at issue in this document sold by TI to Customer on an annual basis.

TAPE AND REEL INFORMATION

REEL DIMENSIONS

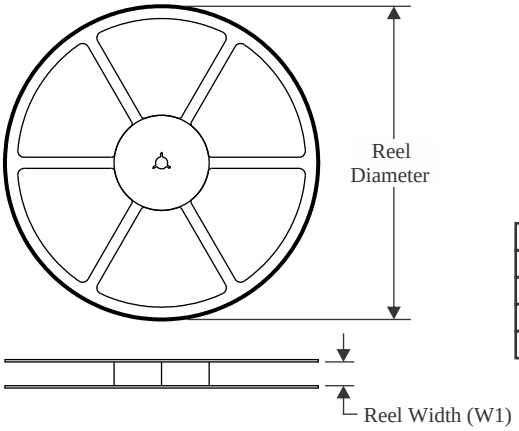

TAPE DIMENSIONS

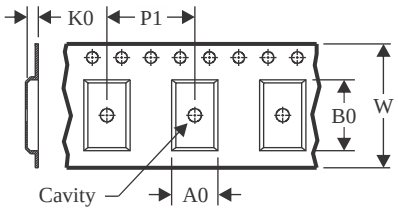

A0	Dimension designed to accommodate the component width
B0	Dimension designed to accommodate the component length
K0	Dimension designed to accommodate the component thickness
W	Overall width of the carrier tape
P1	Pitch between successive cavity centers

QUADRANT ASSIGNMENTS FOR PIN 1 ORIENTATION IN TAPE

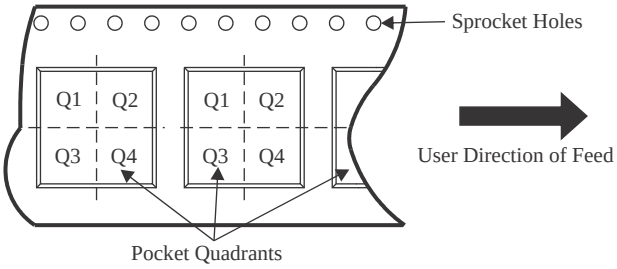

*All dimensions are nominal

Device	Package Type	Package Drawing	Pins	SPQ	Reel Diameter (mm)	Reel Width W1 (mm)	A0 (mm)	B0 (mm)	K0 (mm)	P1 (mm)	W (mm)	Pin1 Quadrant
IWR6443AQGABLR	FCCSP	ABL	161	1000	330.0	24.4	10.7	10.7	1.65	16.0	24.0	Q1
IWR6843ABGABLR	FCCSP	ABL	161	1000	330.0	24.4	10.7	10.7	1.65	16.0	24.0	Q1
IWR6843AQGABLR	FCCSP	ABL	161	1000	330.0	24.4	10.7	10.7	1.65	16.0	24.0	Q1

TAPE AND REEL BOX DIMENSIONS

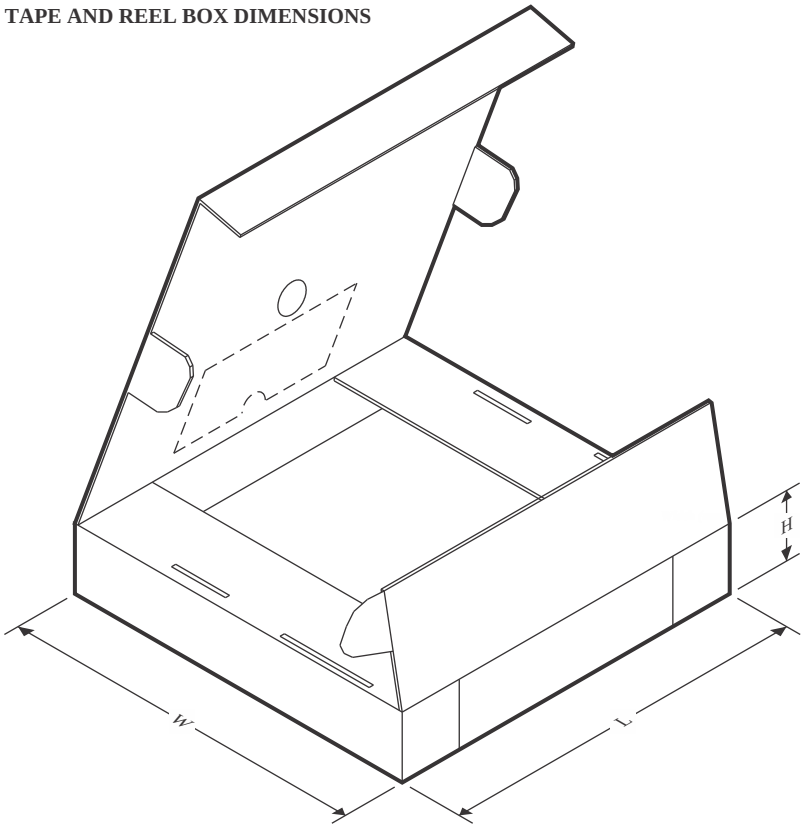

*All dimensions are nominal

Device	Package Type	Package Drawing	Pins	SPQ	Length (mm)	Width (mm)	Height (mm)
IWR6443AQGABLR	FCCSP	ABL	161	1000	336.6	336.6	41.3
IWR6843ABGABLR	FCCSP	ABL	161	1000	336.6	336.6	41.3
IWR6843AQGABLR	FCCSP	ABL	161	1000	336.6	336.6	41.3

TRAY

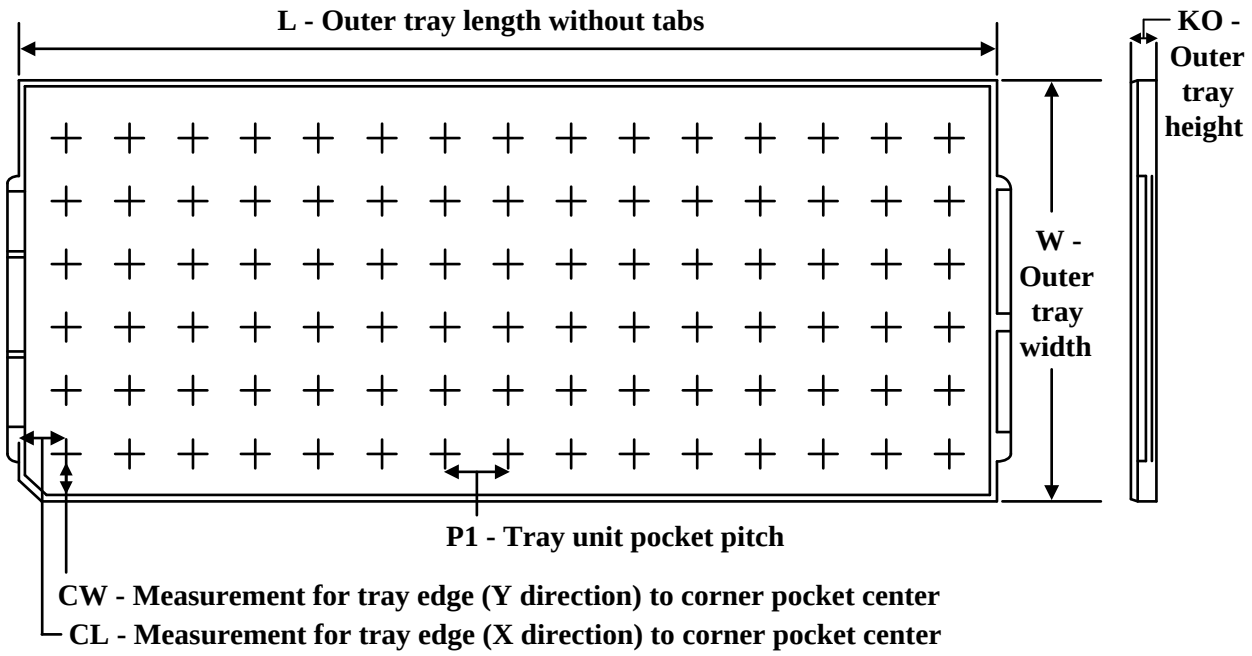

Chamfer on Tray corner indicates Pin 1 orientation of packed units.

*All dimensions are nominal

Device	Package Name	Package Type	Pins	SPQ	Unit array matrix	Max temperature (°C)	L (mm)	W (mm)	K0 (µm)	P1 (mm)	CL (mm)	CW (mm)
IWR6443AQGABL	ABL	FCCSP	161	176	8 x 22	150	315	135.9	7620	13.4	16.8	17.2
IWR6443AQGABL.B	ABL	FCCSP	161	176	8 x 22	150	315	135.9	7620	13.4	16.8	17.2
IWR6843ABGABL	ABL	FCCSP	161	176	8 x 22	150	315	135.9	7620	13.4	16.8	17.2
IWR6843ABGABL.B	ABL	FCCSP	161	176	8 x 22	150	315	135.9	7620	13.4	16.8	17.2
IWR6843AQGABL	ABL	FCCSP	161	176	8 x 22	150	315	135.9	7620	13.4	16.8	17.2
IWR6843AQGABL.B	ABL	FCCSP	161	176	8 x 22	150	315	135.9	7620	13.4	16.8	17.2

GENERIC PACKAGE VIEW

ABL 161

FCBGA - 1.17 mm max height

10.4 x 10.4, 0.65 mm pitch

PLASTIC BALL GRID ARRAY

This image is a representation of the package family, actual package may vary.
Refer to the product data sheet for package details.

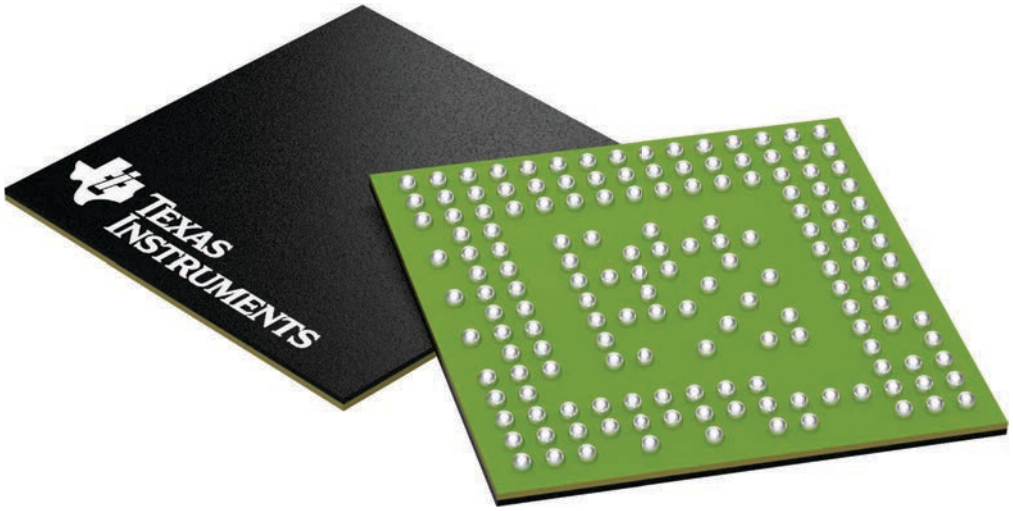

4225978/A

IMPORTANT NOTICE AND DISCLAIMER

TI PROVIDES TECHNICAL AND RELIABILITY DATA (INCLUDING DATASHEETS), DESIGN RESOURCES (INCLUDING REFERENCE DESIGNS), APPLICATION OR OTHER DESIGN ADVICE, WEB TOOLS, SAFETY INFORMATION, AND OTHER RESOURCES “AS IS” AND WITH ALL FAULTS, AND DISCLAIMS ALL WARRANTIES, EXPRESS AND IMPLIED, INCLUDING WITHOUT LIMITATION ANY IMPLIED WARRANTIES OF MERCHANTABILITY, FITNESS FOR A PARTICULAR PURPOSE OR NON-INFRINGEMENT OF THIRD PARTY INTELLECTUAL PROPERTY RIGHTS.

These resources are intended for skilled developers designing with TI products. You are solely responsible for (1) selecting the appropriate TI products for your application, (2) designing, validating and testing your application, and (3) ensuring your application meets applicable standards, and any other safety, security, regulatory or other requirements.

These resources are subject to change without notice. TI grants you permission to use these resources only for development of an application that uses the TI products described in the resource. Other reproduction and display of these resources is prohibited. No license is granted to any other TI intellectual property right or to any third party intellectual property right. TI disclaims responsibility for, and you fully indemnify TI and its representatives against any claims, damages, costs, losses, and liabilities arising out of your use of these resources.

TI’s products are provided subject to TI’s Terms of Sale, TI’s General Quality Guidelines, or other applicable terms available either on ti.com or provided in conjunction with such TI products. TI’s provision of these resources does not expand or otherwise alter TI’s applicable warranties or warranty disclaimers for TI products. Unless TI explicitly designates a product as custom or customer-specified, TI products are standard, catalog, general purpose devices.

TI objects to and rejects any additional or different terms you may propose.

Copyright © 2026, Texas Instruments Incorporated

Last updated 10/2025

Looking for pricing, stock, or lifecycle information?

Click below to explore more details on WIN SOURCE:

- View IWR6443AQGABLR on WIN SOURCE
- Texas Instruments Information

Optimize Your Supply Chain with WIN SOURCE Solutions

- Global Sourcing Solution
- Obsolete Management
- Cost Control Management
- Shortage Management
- Alternative Solution
- Excess Inventory Management