AFE79xx Quad-Channel RF Transceiver With Feedback Path

1 Features

- Quad RF sampling 12-GSPS transmit DACs
- Quad RF sampling 3-GSPS receive ADCs
- Dual RF sampling 3-GSPS feedback ADCs (AFE792x only)
- Maximum RF signal bandwidth:
  - TX/FB: 1200 MHz (AFE7920/88) or 400 MHz (AFE7989) or 800MHz (AFE7921)
  - RX: 600 MHz (AFE7920/88) or 400 MHz (AFE7921/AFE7989)
- Digital Step Attenuators (DSA):
  - TX: 40 dB range, 1-dB analog and 0.125-dB digital steps
  - RX: 25 dB range, 0.5-dB steps
  - FB: 25 dB range, 0.5-dB steps
- Single or dual-band DUC/DDCs (AFE7920/88 only) for TX and RX
- Dual NCOs for fast frequency switching
- Supports TDD operation with fast switching between TX and RX
- Internal PLL/VCO to generate DAC/ADC clocks
- Optional external CLK at DAC or ADC rate
- SerDes data interface:
  - JESD204B and JESD204C compliant
  - 8 SerDes transceivers up to 29.5 Gbps
  - 8b/10b and 64b/66b encoding
  - 12-bit, 16-bit, 24-bit, and 32-bit resolution
  - Subclass 1 multi-device synchronization
- Package: 17-mm × 17-mm FCBGA, 0.8-mm pitch

2 Applications

- Macro remote radio unit (RRU)
- Active antenna system mMIMO (AAS)
- Small cell base station
- Repeater
- Distributed Antenna Systems (DAS)

3 Description

The AFE79xx is a family of high performance, wide bandwidth multi-channel transceivers, integrating four RF sampling transmitter chains, four RF sampling receiver chains, and up to two RF sampling digitizing auxiliary chains (feedback paths). The high dynamic range of the transmitter and receiver chains allows the device to generate and receive 3G, 4G, and 5G signals from wireless base stations, while the wide bandwidth capability of the AFE79xx devices is designed for multi-band 4G and 5G base stations.

Each receiver chain includes a 25-dB range DSA (Digital Step Attenuator), followed by a 3-GSPS ADC (analog-to-digital converter). Each receiver channel has an analog peak power detector and various digital power detectors to assist an external or internal autonomous automatic gain controller, and RF overload detectors for device reliability protection. The single or dual digital down converters (DDC) provide up to 600 MHz of combined signal BW. In TDD mode, the receiver channel can be configured to dynamically switch between the traffic receiver (TDD RX) and wideband feedback receiver (TDD FB), with the capability of re-using the same analog input for both purposes.

Each transmitter chain includes a single or dual digital up converters (DUCs) supporting up to 1200-MHz combined signal bandwidth. The output of the DUCs drives a 12-GSPS DAC (digital to analog converter) with a mixed mode output option to enhance 2nd or 3rd Nyquist operation. The DAC output includes a variable gain amplifier (TX DSA) with 40-dB range and 1-dB analog and 0.125-dB digital steps.

The feedback path includes an 25-dB range DSA driving a 3-GSPS RF sampling ADC, followed by a DDC with up to 1200-MHz bandwidth.

Device Information(1)

PART NUMBER	PACKAGE	BODY SIZE
AFE7989	FC-BGA	17.00 mm × 17.00 mm
AFE7920	FC-BGA	17.00 mm × 17.00 mm
AFE7988	FC-BGA	17.00 mm × 17.00 mm
AFE7921	FC-BGA	17.00 mm × 17.00 mm

(1) For more information, see *Mechanical, Packaging, and Orderable Information*.

An IMPORTANT NOTICE at the end of this data sheet addresses availability, warranty, changes, use in safety-critical applications, intellectual property matters and other important disclaimers. PRODUCTION DATA.

4 Functional Block Diagram

4.1 AFE7920/AFE7921 Functional Block Diagram

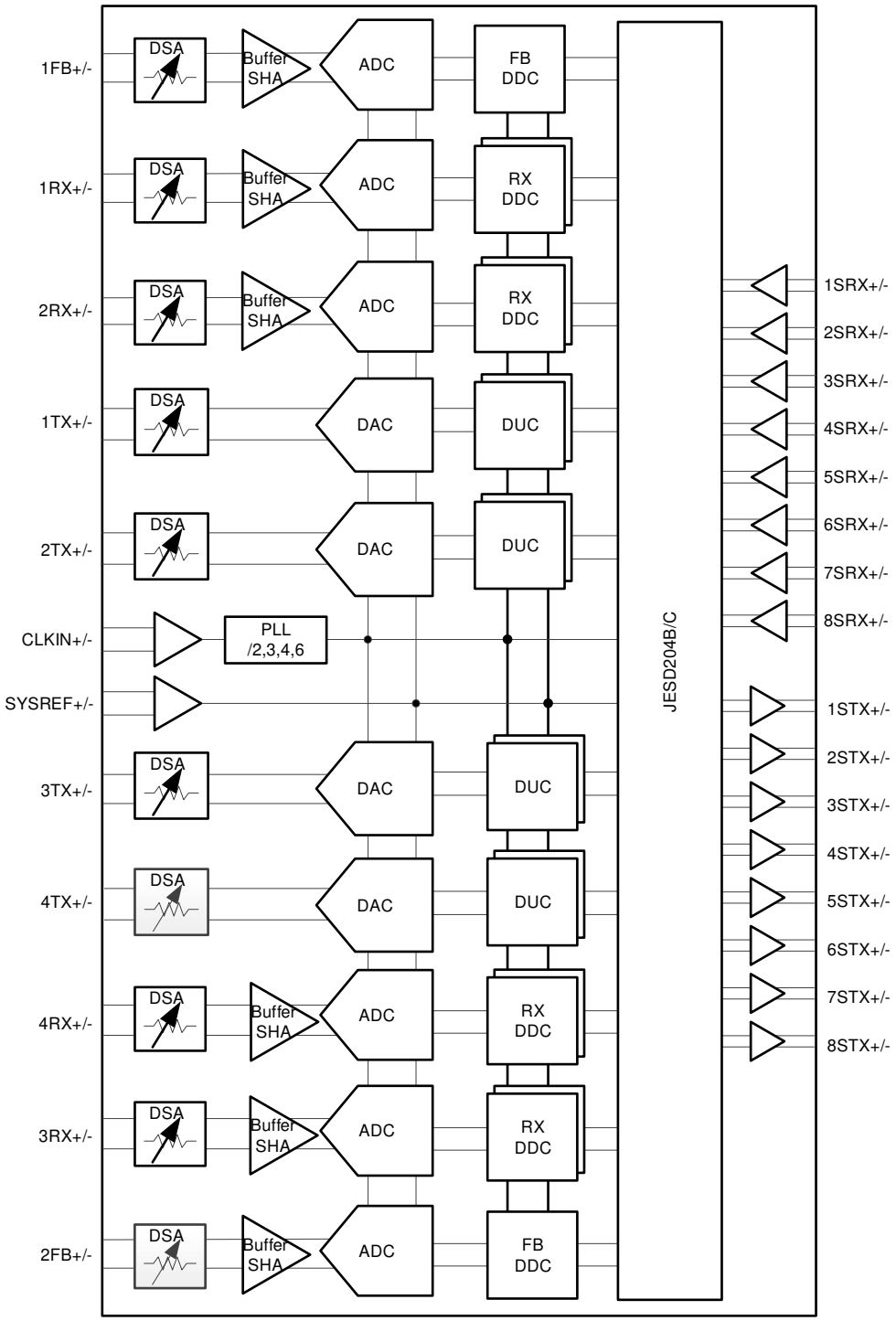

Copyright © 2019–2020, Texas Instruments Incorporated

4.2 AFE7988/89 Functional Block Diagram

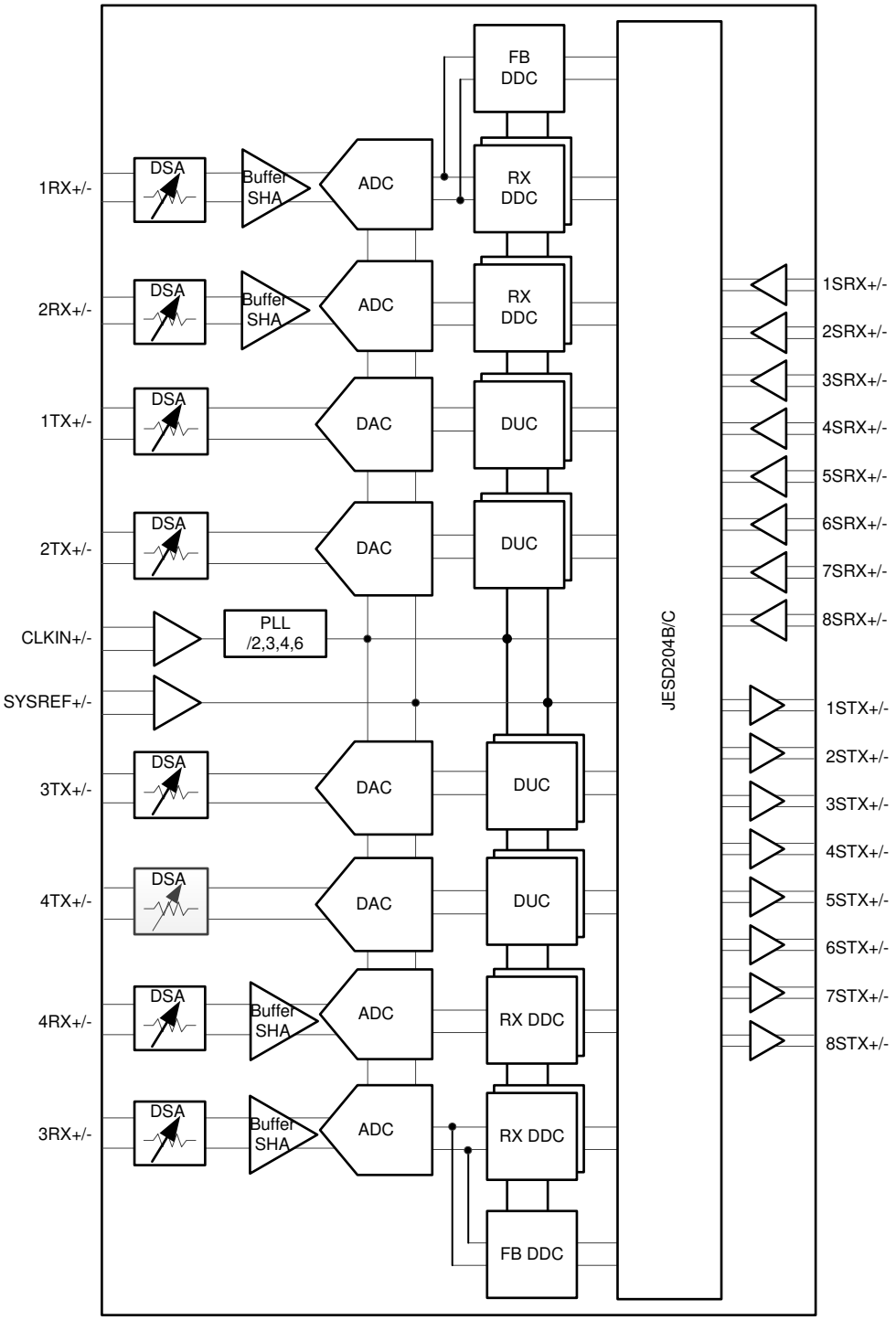

Table of Contents

1 **Features** ... 1
2 **Applications** ... 1
3 **Description** ... 1
4 **Functional Block Diagram** ... 2
4.1 AFE7920/AFE7921 Functional Block Diagram ... 2
4.2 AFE7988/89 Functional Block Diagram ... 3
5 **Revision History** ... 4
6 **Device and Documentation Support** ... 5
6.1 Device Support ... 5
6.2 Related Links ... 5
6.3 Receiving Notification of Documentation Updates ... 5
6.4 Support Resources ... 5
6.5 Trademarks ... 5
6.6 Electrostatic Discharge Caution ... 5
6.7 Glossary ... 5
7 **Mechanical, Packaging, and Orderable Information** ... 6

5 Revision History

NOTE: Page numbers for previous revisions may differ from page numbers in the current version.

Changes from Revision B (April 2020) to Revision C	Page
• Changed AFE7921 device status from advanced information to production data	1
• Changed AFE7921 maximum TX/FB RF signal bandwidth from 400MHz to 800MHz.	1

Changes from Revision A (February 2020) to Revision B	Page
• Changed AFE7988 device status from advanced information to production data	1

Changes from Original (December 2019) to Revision A	Page
• Changed AFE7920 device status from advanced information to production data	1

Copyright © 2019–2020, Texas Instruments Incorporated

6 Device and Documentation Support

6.1 Device Support

6.1.1 Third-Party Products Disclaimer

TI'S PUBLICATION OF INFORMATION REGARDING THIRD-PARTY PRODUCTS OR SERVICES DOES NOT CONSTITUTE AN ENDORSEMENT REGARDING THE SUITABILITY OF SUCH PRODUCTS OR SERVICES OR A WARRANTY, REPRESENTATION OR ENDORSEMENT OF SUCH PRODUCTS OR SERVICES, EITHER ALONE OR IN COMBINATION WITH ANY TI PRODUCT OR SERVICE.

6.2 Related Links

The table below lists quick access links. Categories include technical documents, support and community resources, tools and software, and quick access to order now.

Table 1. Related Links

PARTS	PRODUCT FOLDER	ORDER NOW	TECHNICAL DOCUMENTS	TOOLS & SOFTWARE	SUPPORT & COMMUNITY
AFE7920	Click here	Click here	Click here	Click here	Click here
AFE7921	Click here	Click here	Click here	Click here	Click here
AFE7988	Click here	Click here	Click here	Click here	Click here
AFE7989	Click here	Click here	Click here	Click here	Click here

6.3 Receiving Notification of Documentation Updates

To receive notification of documentation updates, navigate to the device product folder on ti.com. In the upper right corner, click on *Alert me* to register and receive a weekly digest of any product information that has changed. For change details, review the revision history included in any revised document.

6.4 Support Resources

TI E2E™ support forums are an engineer's go-to source for fast, verified answers and design help — straight from the experts. Search existing answers or ask your own question to get the quick design help you need.

Linked content is provided "AS IS" by the respective contributors. They do not constitute TI specifications and do not necessarily reflect TI's views; see TI's Terms of Use.

6.5 Trademarks

E2E is a trademark of Texas Instruments.
All other trademarks are the property of their respective owners.

6.6 Electrostatic Discharge Caution

This integrated circuit can be damaged by ESD. Texas Instruments recommends that all integrated circuits be handled with appropriate precautions. Failure to observe proper handling and installation procedures can cause damage.

ESD damage can range from subtle performance degradation to complete device failure. Precision integrated circuits may be more susceptible to damage because very small parametric changes could cause the device not to meet its published specifications.

6.7 Glossary

SLYZ022 — *TI Glossary*.

This glossary lists and explains terms, acronyms, and definitions.

7 Mechanical, Packaging, and Orderable Information

The following pages include mechanical, packaging, and orderable information. This information is the most current data available for the designated devices. This data is subject to change without notice and revision of this document. For browser-based versions of this data sheet, refer to the left-hand navigation.

Copyright © 2019–2020, Texas Instruments Incorporated

PACKAGING INFORMATION

Orderable part number	Status (1)	Material type (2)	Package | Pins	Package qty | Carrier	RoHS (3)	Lead finish/ Ball material (4)	MSL rating/ Peak reflow (5)	Op temp (°C)	Part marking (6)
AFE7920IABJ	Active	Production	FCBGA (ABJ) | 400	90 | JEDEC TRAY (5+1)	Yes	SNAGCU	Level-3-260C-168 HR	-40 to 85	AFE7920I
AFE7921IABJ	Active	Production	FCBGA (ABJ) | 400	90 | JEDEC TRAY (5+1)	Yes	SNAGCU	Level-3-260C-168 HR	-40 to 85	AFE7921I
AFE7988IABJ	Active	Production	FCBGA (ABJ) | 400	90 | JEDEC TRAY (5+1)	Yes	SNAGCU	Level-3-260C-168 HR	-40 to 85	AFE7988I
AFE7989IABJ	Active	Production	FCBGA (ABJ) | 400	90 | JEDEC TRAY (5+1)	Yes	SNAGCU	Level-3-260C-168 HR	-40 to 85	AFE7989I

(1) **Status:** For more details on status, see our product life cycle.

(2) **Material type:** When designated, preproduction parts are prototypes/experimental devices, and are not yet approved or released for full production. Testing and final process, including without limitation quality assurance, reliability performance testing, and/or process qualification, may not yet be complete, and this item is subject to further changes or possible discontinuation. If available for ordering, purchases will be subject to an additional waiver at checkout, and are intended for early internal evaluation purposes only. These items are sold without warranties of any kind.

(3) **RoHS values:** Yes, No, RoHS Exempt. See the TI RoHS Statement for additional information and value definition.

(4) **Lead finish/Ball material:** Parts may have multiple material finish options. Finish options are separated by a vertical ruled line. Lead finish/Ball material values may wrap to two lines if the finish value exceeds the maximum column width.

(5) **MSL rating/Peak reflow:** The moisture sensitivity level ratings and peak solder (reflow) temperatures. In the event that a part has multiple moisture sensitivity ratings, only the lowest level per JEDEC standards is shown. Refer to the shipping label for the actual reflow temperature that will be used to mount the part to the printed circuit board.

(6) **Part marking:** There may be an additional marking, which relates to the logo, the lot trace code information, or the environmental category of the part.

Multiple part markings will be inside parentheses. Only one part marking contained in parentheses and separated by a "~" will appear on a part. If a line is indented then it is a continuation of the previous line and the two combined represent the entire part marking for that device.

Important Information and Disclaimer: The information provided on this page represents TI's knowledge and belief as of the date that it is provided. TI bases its knowledge and belief on information provided by third parties, and makes no representation or warranty as to the accuracy of such information. Efforts are underway to better integrate information from third parties. TI has taken and continues to take reasonable steps to provide representative and accurate information but may not have conducted destructive testing or chemical analysis on incoming materials and chemicals. TI and TI suppliers consider certain information to be proprietary, and thus CAS numbers and other limited information may not be available for release.

In no event shall TI's liability arising out of such information exceed the total purchase price of the TI part(s) at issue in this document sold by TI to Customer on an annual basis.

TRAY

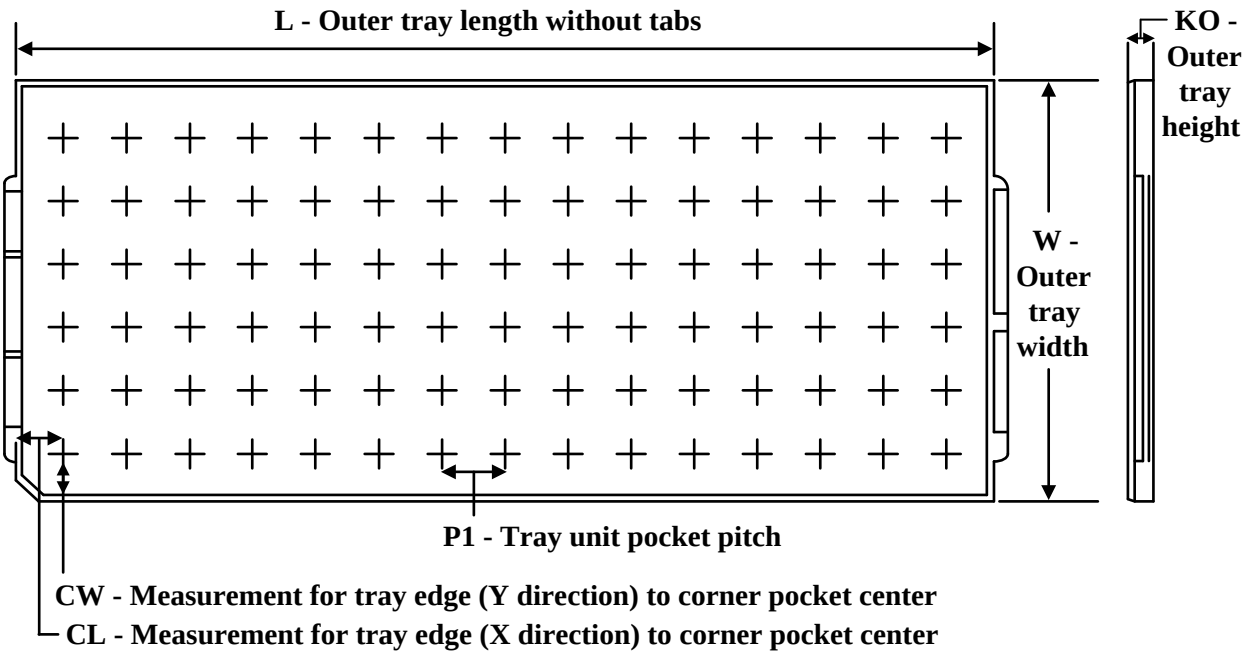

Chamfer on Tray corner indicates Pin 1 orientation of packed units.

*All dimensions are nominal

Device	Package Name	Package Type	Pins	SPQ	Unit array matrix	Max temperature (°C)	L (mm)	W (mm)	K0 (µm)	P1 (mm)	CL (mm)	CW (mm)
AFE7920IABJ	ABJ	FCBGA	400	90	6 x 15	150	315	135.9	7620	19.5	21	19.2
AFE7920IABJ	ABJ	FCBGA	400	90	6 x 15	150	315	135.9	7620	19.5	21	19.2
AFE7921IABJ	ABJ	FCBGA	400	90	6 x 15	150	315	135.9	7620	19.5	21	19.2
AFE7921IABJ	ABJ	FCBGA	400	90	6 x 15	150	315	135.9	7620	19.5	21	19.2
AFE7988IABJ	ABJ	FCBGA	400	90	6 x 15	150	315	135.9	7620	19.5	21	19.2
AFE7988IABJ	ABJ	FCBGA	400	90	6 x 15	150	315	135.9	7620	19.5	21	19.2
AFE7989IABJ	ABJ	FCBGA	400	90	6 x 15	150	315	135.9	7620	19.5	21	19.2
AFE7989IABJ	ABJ	FCBGA	400	90	6 x 15	150	315	135.9	7620	19.5	21	19.2

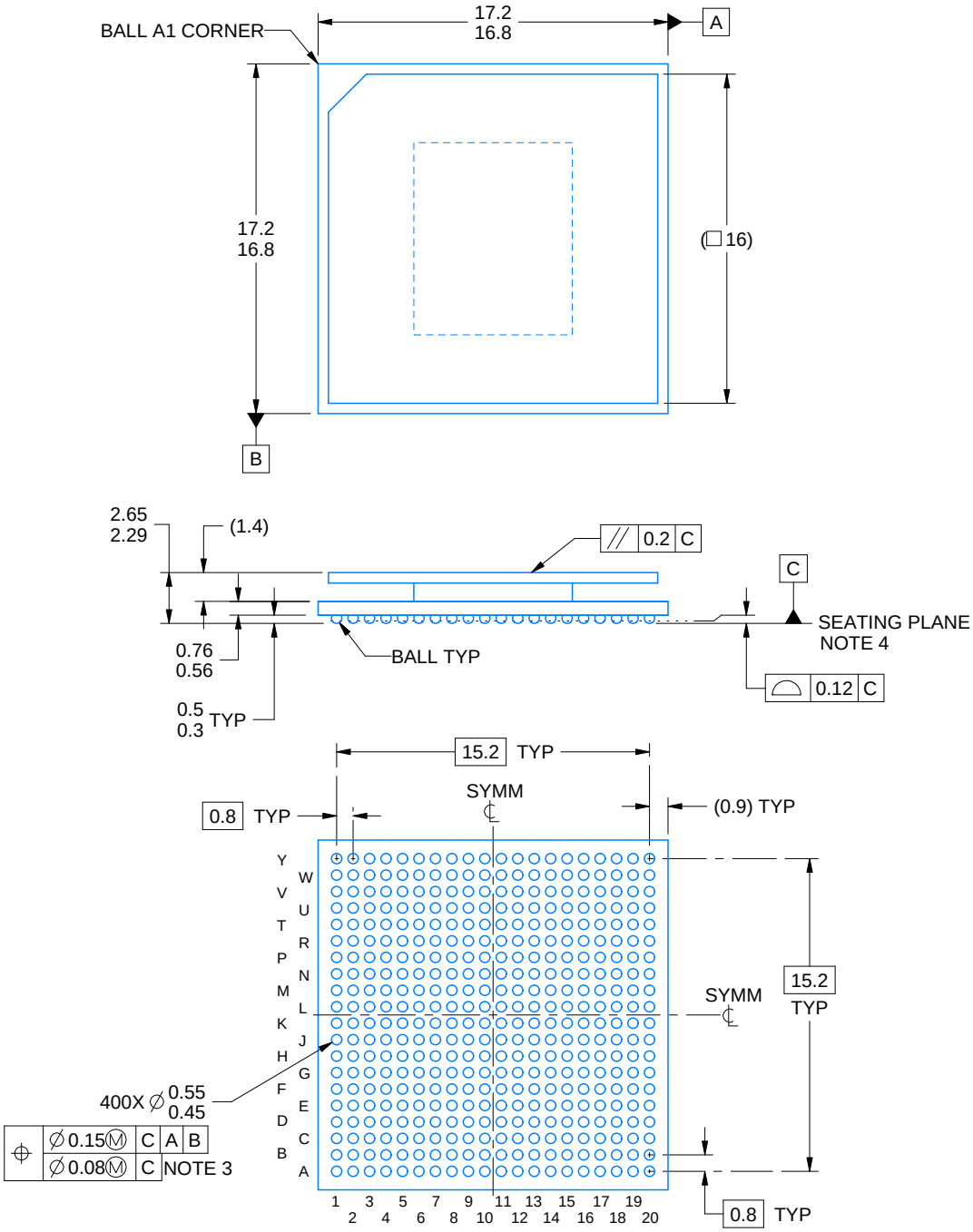

NOTES:

1. All linear dimensions are in millimeters. Any dimensions in parenthesis are for reference only. Dimensioning and tolerancing per ASME Y14.5M.
2. This drawing is subject to change without notice.
3. Dimension is measured at the maximum solder ball diameter, parallel to primary datum C.
4. Primary datum C and seating plane are defined by the spherical crowns of the solder balls.
5. The lids are electrically floating (e.g. not tied to GND).

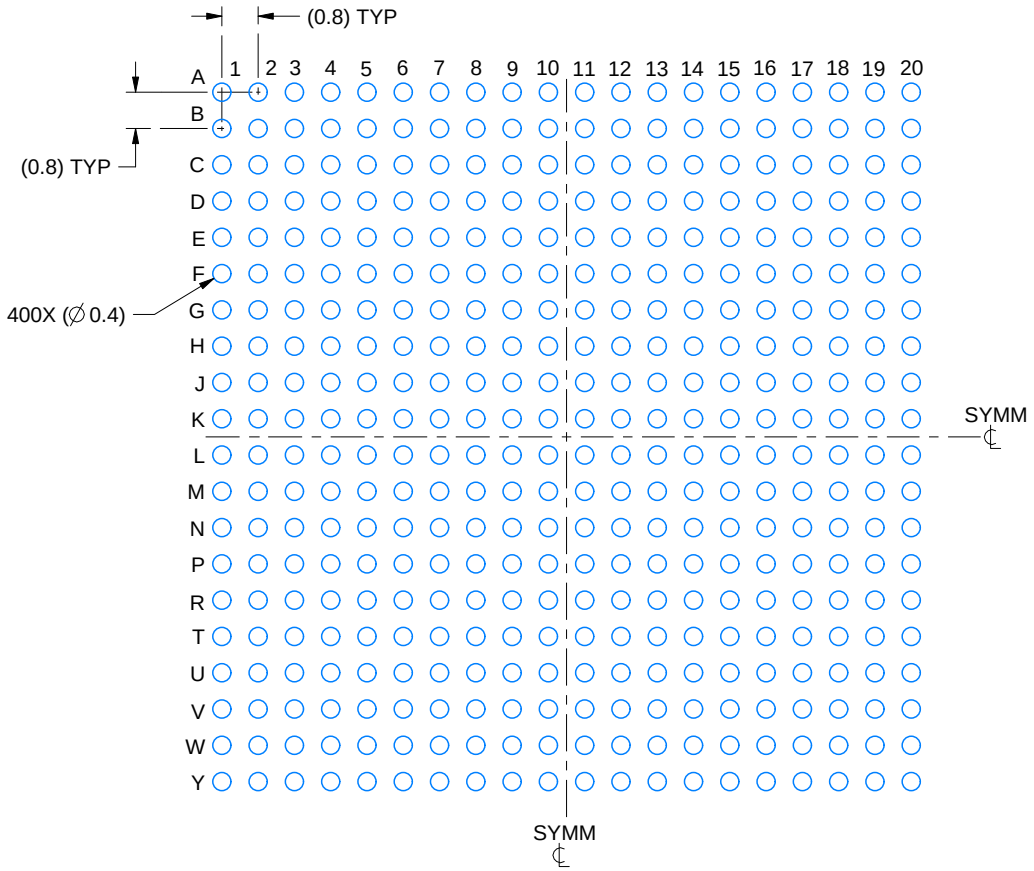

LAND PATTERN EXAMPLE
EXPOSED METAL SHOWN
SCALE:6X

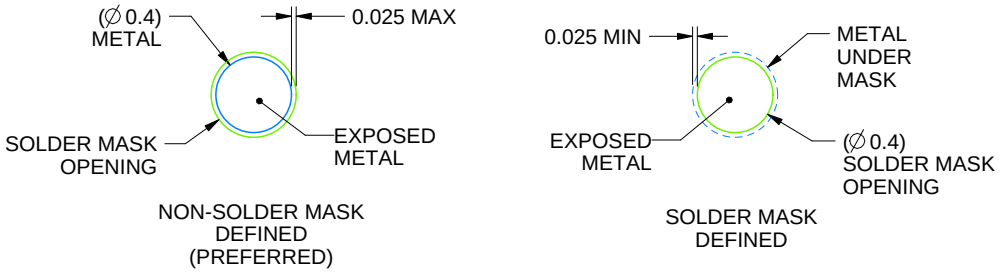

SOLDER MASK DETAILS
NOT TO SCALE

4221311/D 03/2023

NOTES: (continued)

6. Final dimensions may vary due to manufacturing tolerance considerations and also routing constraints.
For more information, see Texas Instruments literature number SPRU811 (www.ti.com/lit/spru811).

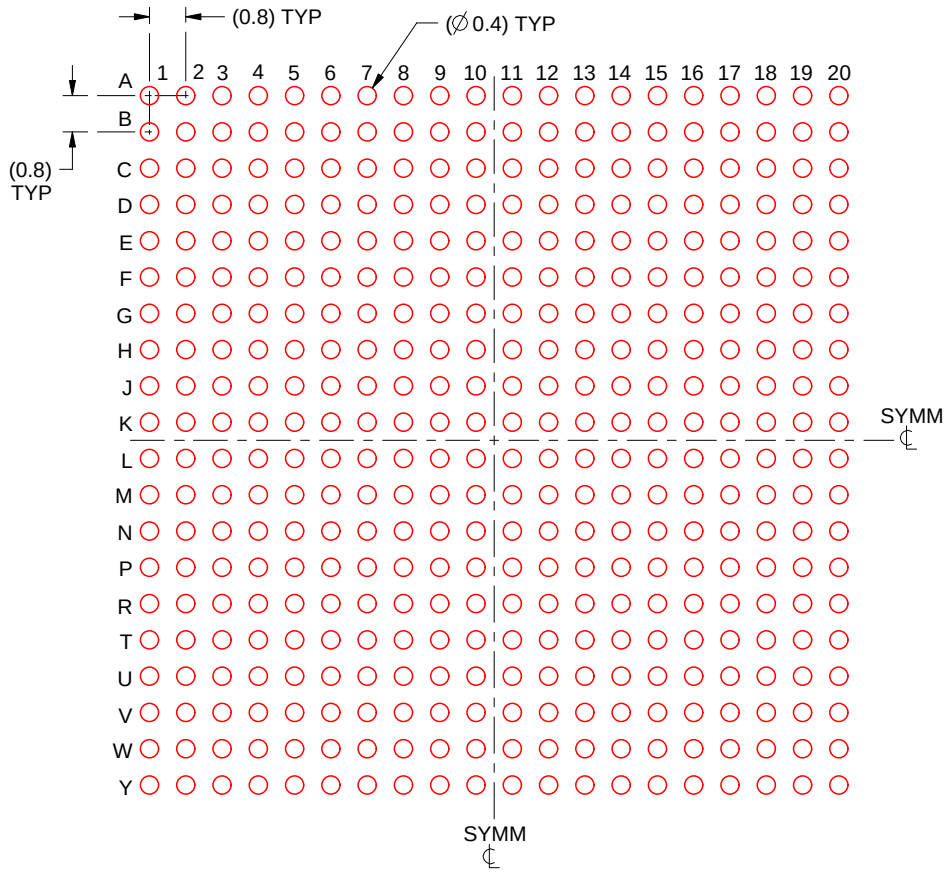

SOLDER PASTE EXAMPLE
BASED ON 0.15 mm THICK STENCIL
SCALE:6X

4221311/D 03/2023

NOTES: (continued)

7. Laser cutting apertures with trapezoidal walls and rounded corners may offer better paste release.

IMPORTANT NOTICE AND DISCLAIMER

TI PROVIDES TECHNICAL AND RELIABILITY DATA (INCLUDING DATASHEETS), DESIGN RESOURCES (INCLUDING REFERENCE DESIGNS), APPLICATION OR OTHER DESIGN ADVICE, WEB TOOLS, SAFETY INFORMATION, AND OTHER RESOURCES “AS IS” AND WITH ALL FAULTS, AND DISCLAIMS ALL WARRANTIES, EXPRESS AND IMPLIED, INCLUDING WITHOUT LIMITATION ANY IMPLIED WARRANTIES OF MERCHANTABILITY, FITNESS FOR A PARTICULAR PURPOSE OR NON-INFRINGEMENT OF THIRD PARTY INTELLECTUAL PROPERTY RIGHTS.

These resources are intended for skilled developers designing with TI products. You are solely responsible for (1) selecting the appropriate TI products for your application, (2) designing, validating and testing your application, and (3) ensuring your application meets applicable standards, and any other safety, security, regulatory or other requirements.

These resources are subject to change without notice. TI grants you permission to use these resources only for development of an application that uses the TI products described in the resource. Other reproduction and display of these resources is prohibited. No license is granted to any other TI intellectual property right or to any third party intellectual property right. TI disclaims responsibility for, and you fully indemnify TI and its representatives against any claims, damages, costs, losses, and liabilities arising out of your use of these resources.

TI’s products are provided subject to TI’s Terms of Sale, TI’s General Quality Guidelines, or other applicable terms available either on ti.com or provided in conjunction with such TI products. TI’s provision of these resources does not expand or otherwise alter TI’s applicable warranties or warranty disclaimers for TI products. Unless TI explicitly designates a product as custom or customer-specified, TI products are standard, catalog, general purpose devices.

TI objects to and rejects any additional or different terms you may propose.

Copyright © 2026, Texas Instruments Incorporated

Last updated 10/2025

Looking for pricing, stock, or lifecycle information?

Click below to explore more details on WIN SOURCE:

- View AFE7988IABJ on WIN SOURCE
- Texas Instruments Information

Optimize Your Supply Chain with WIN SOURCE Solutions

- Global Sourcing Solution
- Obsolete Management
- Cost Control Management
- Shortage Management
- Alternative Solution
- Excess Inventory Management