THE DATASHEET OF

LM2594HVMX-5.0/NOPB

www.win-source.net 0086-755-83957316

LM2594, LM2594HV SIMPLE SWITCHER® Power Converter 150-kHz 0.5-A Step-Down Voltage Regulator

1 Features

- 3.3-V, 5-V, 12-V, and Adjustable Output Versions
- Adjustable Version Output Voltage Range: 1.2 V to 37 V (57 V for the HV Version), ±4% Maximum Over Line and Load Conditions
- Available in 8-Pin Surface-Mount SOIC and 8-Pin PDIP Packages
- Ensured 0.5-A Output Current
- Input Voltage Range up to 60 V
- Requires Only 4 External Components
- 150-kHz Fixed-Frequency Internal Oscillator
- TTL Shutdown Capability
- Low Power Standby Mode, I_Q Typically 85 μA
- High Efficiency
- Uses Readily-Available Standard Inductors
- Thermal Shutdown and Current-Limit Protection

2 Applications

- Simple High-Efficiency Step-Down (Buck) Regulator
- Efficient Preregulator for Linear Regulators
- On-Card Switching Regulators
- Positive-to-Negative Convertor

3 Description

The LM2594xx series of regulators are monolithic integrated circuits that provide all the active functions for a step-down (buck) switching regulator, capable of driving a 0.5-A load with excellent line and load regulation. These devices are available in fixed output voltages of 3.3 V, 5 V, 12 V, and an adjustable output version, and are packaged in a 8-pin PDIP and a 8-pin surface-mount SOIC package.

Requiring a minimum number of external components, these regulators are simple to use and feature internal frequency compensation, a fixed-frequency oscillator, and improved line and load regulation specifications.

The LM2594xx series operates at a switching frequency of 150-kHz, thus allowing smaller-sized filter components than what would be needed with lower-frequency switching regulators. Because of its high efficiency, the copper traces on the printed-circuit board are normally the only heat sinking needed.

Device Information(1)

PART NUMBER	PACKAGE	BODY SIZE (NOM)
LM2597, LM2597HV	SOIC (8)	4.90 mm × 3.91 mm
	PDIP (8)	9.81 mm × 6.35 mm

(1) For all available packages, see the orderable addendum at the end of the data sheet.

Typical Application

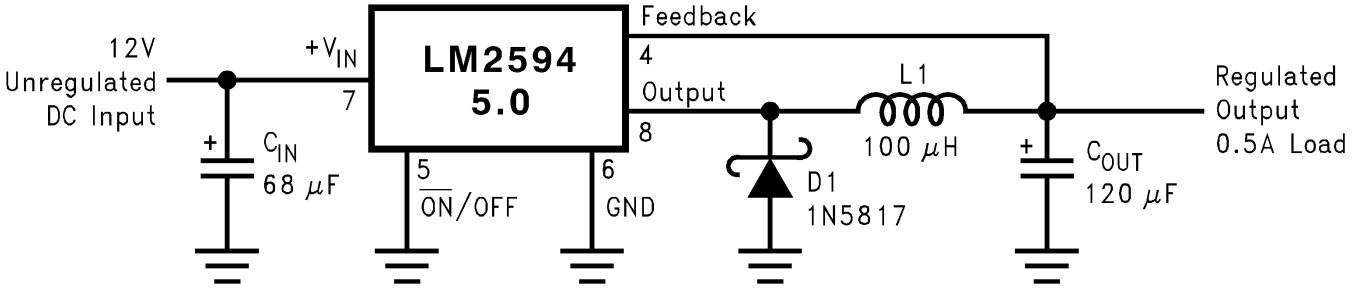

Copyright © 2016, Texas Instruments Incorporated

Fixed Output Voltage Versions

An IMPORTANT NOTICE at the end of this data sheet addresses availability, warranty, changes, use in safety-critical applications, intellectual property matters and other important disclaimers. PRODUCTION DATA.

Table of Contents

1 Features ... 1
2 Applications ... 1
3 Description ... 1
4 Revision History ... 2
5 Description (continued) ... 3
6 Pin Configuration and Functions ... 3
7 Specifications ... 4
7.1 Absolute Maximum Ratings ... 4
7.2 ESD Ratings ... 4
7.3 Recommended Operating Conditions ... 4
7.4 Thermal Information ... 4
7.5 Electrical Characteristics – 3.3 V ... 5
7.6 Electrical Characteristics – 5 V ... 5
7.7 Electrical Characteristics – 12 V ... 5
7.8 Electrical Characteristics – Adjustable ... 6
7.9 Electrical Characteristics – All Output Voltage Versions ... 6
7.10 Typical Characteristics ... 7
8 Detailed Description ... 10
8.1 Overview ... 10
8.2 Functional Block Diagram ... 10
8.3 Feature Description ... 10
8.4 Device Functional Modes ... 14
9 Application and Implementation ... 15
9.1 Application Information ... 15
9.2 Typical Applications ... 22
10 Power Supply Recommendations ... 29
11 Layout ... 30
11.1 Layout Guidelines ... 30
11.2 Layout Example ... 30
11.3 Thermal Considerations ... 31
12 Device and Documentation Support ... 33
12.1 Related Links ... 33
12.2 Community Resources ... 33
12.3 Trademarks ... 33
12.4 Electrostatic Discharge Caution ... 33
12.5 Glossary ... 33
13 Mechanical, Packaging, and Orderable Information ... 33

4 Revision History

NOTE: Page numbers for previous revisions may differ from page numbers in the current version.

Changes from Revision C (April 2013) to Revision D	Page
• Added *ESD Ratings* table, *Feature Description* section, *Device Functional Modes*, *Application and Implementation* section, *Power Supply Recommendations* section, *Layout* section, *Device and Documentation Support* section, and *Mechanical, Packaging, and Orderable Information* section.	1
• Removed all references to design software *Switchers Made Simple*	1

Changes from Revision B (April 2013) to Revision C	Page
• Changed layout of National Semiconductor Data Sheet to TI format	31

Copyright © 1999–2016, Texas Instruments Incorporated

5 Description (continued)

A standard series of inductors (both through-hole and surface-mount types) are available from several different manufacturers optimized for use with the LM2594xx series. This feature greatly simplifies the design of switch-mode power supplies.

Other features include an ensured ±4% tolerance on output voltage under all conditions of input voltage and output load conditions, and ±15% on the oscillator frequency. External shutdown is included, featuring typically 85-μA standby current. Self-protection features include a two stage frequency reducing current limit for the output switch and an overtemperature shutdown for complete protection under fault conditions.

The LM2594HV is for applications requiring an input voltage up to 60 V.

6 Pin Configuration and Functions

D or P Package
8-Pin SOIC or PDIP
Top View

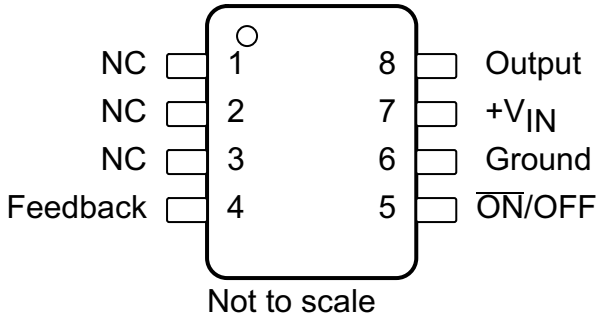

*No internal connection, but must be soldered to PCB for best heat transfer.

‡Patent Number 5,382,918.

Pin Functions[(1)]

PIN		I/O	DESCRIPTION
NO.	NAME		
1, 2, 3	NC	—	No connection
4	Feedback	I	Senses the regulated output voltage to complete the feedback loop.
5	$\overline{ON}$/OFF	I	Allows the switching regulator circuit to be shut down using logic level signals, thus dropping the total input supply current to approximately 80 μA. Pulling this pin below a threshold voltage of approximately 1.3 V turns the regulator on, and pulling this pin above 1.3 V (up to a maximum of 25 V) shuts the regulator down. If this shutdown feature is not needed, the $\overline{ON}$/OFF pin can be wired to the ground pin or it can be left open, in either case the regulator is in the ON condition.
6	Ground	—	Circuit ground.
7	$+V_{IN}$	I	This is the positive input supply for the IC switching regulator. A suitable input bypass capacitor must be present at this pin to minimize voltage transients and to supply the switching currents needed by the regulator.
8	Output	O	Internal switch. The voltage at this pin switches between ($+V_{IN} - V_{SAT}$) and approximately −0.5 V, with a duty cycle of V_{OUT}/V_{IN}. To minimize coupling to sensitive circuitry, the PCB copper area connected to this pin must be kept to a minimum.

(1) I = INPUT, O = OUTPUT

7 Specifications

7.1 Absolute Maximum Ratings[1][2]

			MIN	MAX	UNIT
Supply voltage		LM2594		45	V
		LM2594HV		60	
$\overline{\text{ON}}$/OFF pin input voltage			−0.3	25	V
Feedback pin voltage			−0.3	25	V
Output voltage to ground (steady state)				−1	V
Power dissipation			Internally limited		
Lead temperature	D8 package	Vapor phase (60 s)		215	°C
		Infrared (15 s)		220	
	P package (soldering, 10 s)			260	
Maximum junction temperature				150	°C
Storage temperature, T_{stg}			−65	150	°C

(1) Stresses beyond those listed under *Absolute Maximum Ratings* may cause permanent damage to the device. These are stress ratings only, which do not imply functional operation of the device at these or any other conditions beyond those indicated under *Recommended Operating Conditions*. Exposure to absolute-maximum-rated conditions for extended periods may affect device reliability.
(2) If Military/Aerospace specified devices are required, please contact the TI Sales Office/ Distributors for availability and specifications.

7.2 ESD Ratings

			VALUE	UNIT
$V_{(ESD)}$	Electrostatic discharge	Human-body model (HBM), per ANSI/ESDA/JEDEC JS-001[1][2]	±2000	V

(1) JEDEC document JEP155 states that 500-V HBM allows safe manufacturing with a standard ESD control process.
(2) The human-body model is a 100-pF capacitor discharged through a 1.5k resistor into each pin.

7.3 Recommended Operating Conditions

		MIN	MAX	UNIT
Supply voltage	LM2594	4.5	40	V
	LM2594HV	4.5	60	V
Temperature		−40	125	°C

7.4 Thermal Information

THERMAL METRIC[1]		LM2594, LM2594HV		UNIT
		D (SOIC)	P (PDIP)	
		8 PINS	8 PINS	
$R_{\theta JA}$	Junction-to-ambient thermal resistance[2][3]	150	95	°C/W

(1) For more information about traditional and new thermal metrics, see the *Semiconductor and IC Package Thermal Metrics* application report, SPRA953.
(2) The package thermal impedance is calculated in accordance to JESD 51-7.
(3) Thermal resistances were simulated on a 4 -layer, JEDEC board.

Copyright © 1999–2016, Texas Instruments Incorporated

7.5 Electrical Characteristics – 3.3 V

Specifications are for T_J = 25°C, V_{INmax}= 40 V for the LM2594 and 60 V for the LM2594HV (unless otherwise noted).

PARAMETER		TEST CONDITIONS		MIN	TYP(1)	MAX(2)	UNIT
SYSTEM PARAMETERS(3) (see Figure 35 for test circuit)							
V_{OUT}	Output voltage	4.75 V ≤ V_{IN} ≤ V_{INmax}, 0.1 A ≤ I_{LOAD} ≤ 0.5 A	T_J = 25°C	3.432	3.3	3.168	V
			Over full operating temperature range	3.465		3.135	
η	Efficiency	V_{IN} = 12 V, I_{LOAD} = 0.5 A			80%		

(1) Typical numbers are at 25°C and represent the most likely norm.
(2) All limits ensured at room temperature and at temperature extremes. All room temperature limits are 100% production tested. All limits at temperature extremes are specified via correlation using standard Statistical Quality Control (SQC) methods. All limits are used to calculate Average Outgoing Quality Level (AOQL).
(3) External components such as the catch diode, inductor, input and output capacitors, and voltage programming resistors can affect switching regulator system performance. When the LM2594xx is used as shown in the Figure 35 test circuit, system performance is as shown in the system parameters.

7.6 Electrical Characteristics – 5 V

Specifications are for T_J = 25°C (unless otherwise noted).

PARAMETER		TEST CONDITIONS		MIN	TYP(1)	MAX(2)	UNIT
SYSTEM PARAMETERS(3) (see Figure 35 for test circuit)							
V_{OUT}	Output voltage	7 V ≤ V_{IN} ≤ V_{INmax}, 0.1 A ≤ I_{LOAD} ≤ 0.5 A	T_J = 25°C	4.8	5	5.2	V
			Over full operating temperature range	4.75		5.25	
η	Efficiency	V_{IN} = 12 V, I_{LOAD} = 0.5 A			82%		

(1) Typical numbers are at 25°C and represent the most likely norm.
(2) All limits ensured at room temperature and at temperature extremes. All room temperature limits are 100% production tested. All limits at temperature extremes are specified via correlation using standard Statistical Quality Control (SQC) methods. All limits are used to calculate Average Outgoing Quality Level (AOQL).
(3) External components such as the catch diode, inductor, input and output capacitors, and voltage programming resistors can affect switching regulator system performance. When the LM2594xx is used as shown in the Figure 35 test circuit, system performance is as shown in the system parameters.

7.7 Electrical Characteristics – 12 V

Specifications are for T_J = 25°C (unless otherwise noted).

PARAMETER		TEST CONDITIONS		MIN	TYP(1)	MAX(2)	UNIT
SYSTEM PARAMETERS(3) (see Figure 35 for test circuit)							
V_{OUT}	Output voltage	15 V ≤ V_{IN} ≤ V_{INmax}, 0.1 A ≤ I_{LOAD} ≤ 0.5 A	T_J = 25°C	11.52	12	12.48	V
			Over full operating temperature range	11.4		12.6	
η	Efficiency	V_{IN} = 25 V, I_{LOAD} = 0.5 A			88%		

(1) Typical numbers are at 25°C and represent the most likely norm.
(2) All limits ensured at room temperature and at temperature extremes. All room temperature limits are 100% production tested. All limits at temperature extremes are specified via correlation using standard Statistical Quality Control (SQC) methods. All limits are used to calculate Average Outgoing Quality Level (AOQL).
(3) External components such as the catch diode, inductor, input and output capacitors, and voltage programming resistors can affect switching regulator system performance. When the LM2594/LM2594HV is used as shown in the Figure 35 test circuit, system performance is as shown in the system parameters.

Copyright © 1999–2016, Texas Instruments Incorporated

7.8 Electrical Characteristics – Adjustable

Specifications are for T_J = 25°C (unless otherwise noted).

PARAMETER		TEST CONDITIONS		MIN	TYP(1)	MAX(2)	UNIT
SYSTEM PARAMETERS(3) (see Figure 35 for test circuit)							
V_{FB}	Feedback voltage	4.5 V ≤ V_{IN} ≤ V_{INmax}, 0.1 A ≤ I_{LOAD} ≤ 0.5 A, V_{OUT} programmed for 3 V, Circuit of Figure 35	T_J = 25°C	1.193	1.23	1.267	V
			Over full operating temperature range	1.18		1.28	
η	Efficiency	V_{IN} = 12 V, I_{LOAD} = 0.5 A			80%		

(1) Typical numbers are at 25°C and represent the most likely norm.
(2) All limits ensured at room temperature and at temperature extremes. All room temperature limits are 100% production tested. All limits at temperature extremes are specified via correlation using standard Statistical Quality Control (SQC) methods. All limits are used to calculate Average Outgoing Quality Level (AOQL).
(3) External components such as the catch diode, inductor, input and output capacitors, and voltage programming resistors can affect switching regulator system performance. When the LM2594/LM2594HV is used as shown in the Figure 35 test circuit, system performance is as shown in the system parameters.

7.9 Electrical Characteristics – All Output Voltage Versions

Specifications are for T_J = 25°C, V_{IN} = 12 V for the 3.3-V, 5-V, and adjustable version, and V_{IN} = 24 V for the 12-V version, I_{LOAD} = 100 mA (unless otherwise noted).

PARAMETER		TEST CONDITIONS		MIN	TYP(1)	MAX(2)	UNIT
DEVICE PARAMETERS							
I_b	Feedback bias current	Adjustable version only, VFB = 1.3 V	T_J = 25°C		10	50	nA
			Over full operating temperature range			100	
f_O	Oscillator frequency	See(3)	T_J = 25°C	127	150	173	kHz
			Over full operating temperature range	110		173	
V_{SAT}	Saturation voltage	I_{OUT} = 0.5 A(4)(5)	T_J = 25°C		0.9	1.1	V
			Over full operating temperature range			1.2	
DC	Max duty cycle (ON)	See(5)			100%		
	Min duty cycle (OFF)	See(6)			0%		
I_{CL}	Current limit	Peak current(4)(5)	T_J = 25°C	0.65	0.8	1.3	A
			over full operating temperature range	0.58		1.4	
I_L	Output leakage current	Output = 0 V(4)(6)(7)				50	µA
		Output = −1 V			2	15	mA
I_Q	Quiescent current	See(6)			5	10	mA
I_{STBY}	Standby quiescent current	ON/OFF pin = 5 V (OFF)(7)			85		µA
		LM2594	T_J = 25°C			200	µA
			Over full operating temperature range			250	
		LM2594HV	T_J = 25°C		140	250	µA
			Over full operating temperature range			300	
ON/OFF CONTROL (see Figure 35 for test circuit)							
	$\overline{ON}$/OFF pin logic input				1.3		V
V_{IH}	Threshold voltage	Low (regulator ON), over full operating temperature range				0.6	V
V_{IL}		High (regulator OFF), over full operating temperature range		2			V
I_H	$\overline{ON}$/OFF pin input current	V_{LOGIC} = 2.5 V (regulator OFF)			5	15	µA
I_L		V_{LOGIC} = 0.5 V (regulator ON)			0.02	5	µA

(1) Typical numbers are at 25°C and represent the most likely norm.
(2) All limits ensured at room temperature and at temperature extremes. All room temperature limits are 100% production tested. All limits at temperature extremes are specified via correlation using standard Statistical Quality Control (SQC) methods. All limits are used to calculate Average Outgoing Quality Level (AOQL).
(3) The switching frequency is reduced when the second stage current limit is activated. The amount of reduction is determined by the severity of current overload.
(4) No diode, inductor or capacitor connected to output pin.
(5) Feedback pin removed from output and connected to 0 V to force the output transistor switch ON.
(6) Feedback pin removed from output and connected to 12 V for the 3.3-V, 5-V, and the adjustable version, and 15 V for the 12-V version, to force the output transistor switch OFF.
(7) V_{IN} = 40 V for the LM2594 and 60 V for the LM2594HV.

Copyright © 1999–2016, Texas Instruments Incorporated

7.10 Typical Characteristics

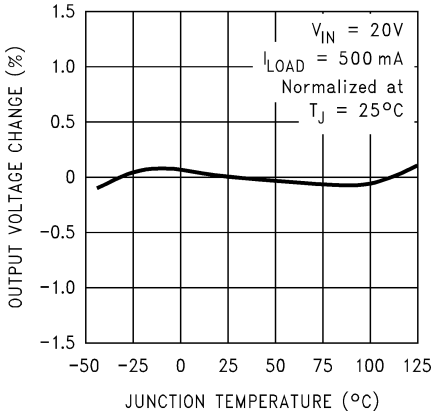

Figure 1. Normalized Output Voltage

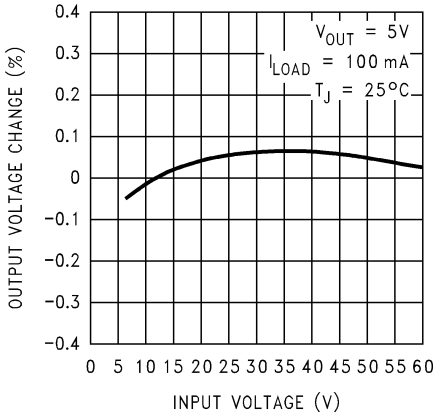

Figure 2. Line Regulation

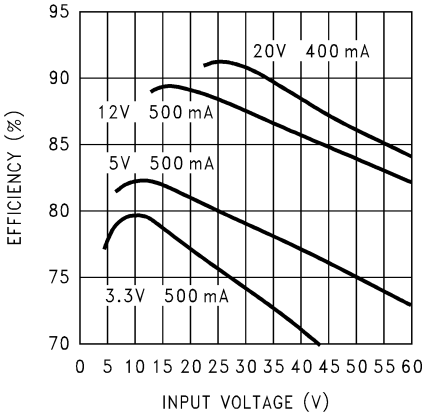

Figure 3. Efficiency

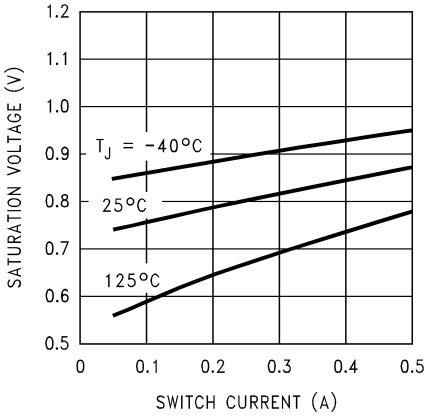

Figure 4. Switch Saturation Voltage

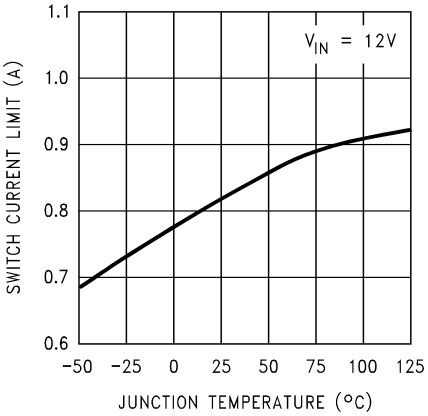

Figure 5. Switch Current Limit

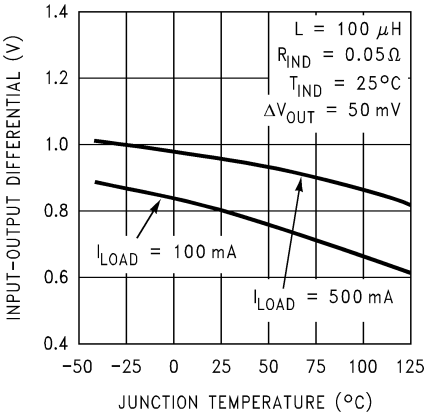

Figure 6. Dropout Voltage

Typical Characteristics (continued)

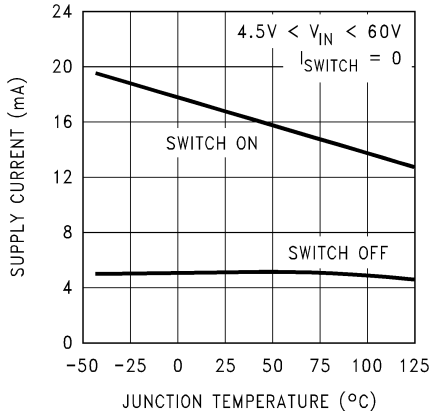

Figure 7. Quiescent Current

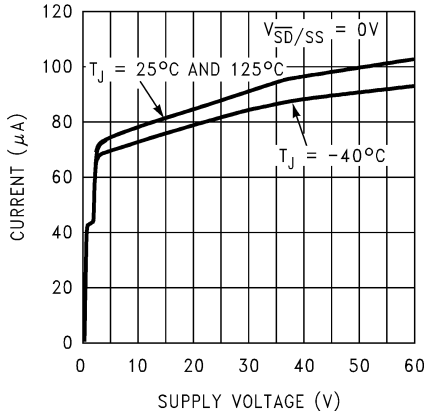

Figure 8. Standby Quiescent Current

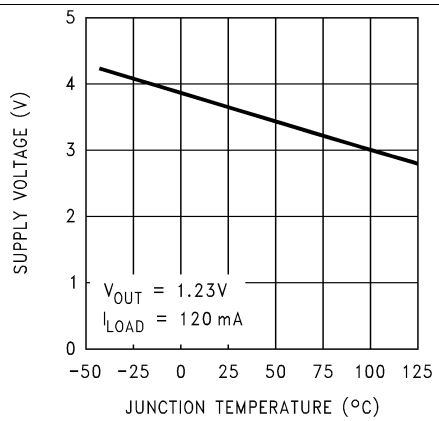

Figure 9. Minimum Operating Supply Voltage

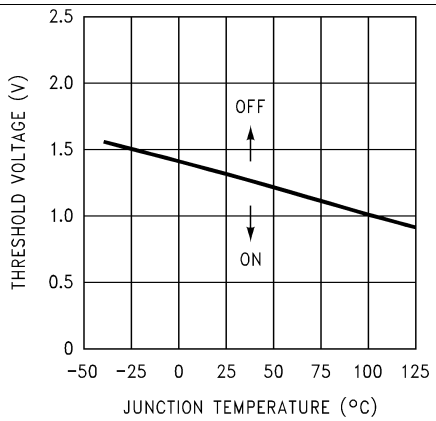

Figure 10. $\overline{ON}$/OFF Threshold Voltage

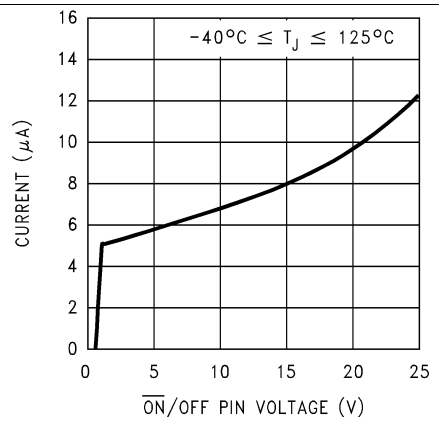

Figure 11. $\overline{ON}$ /OFF Pin Current (Sinking)

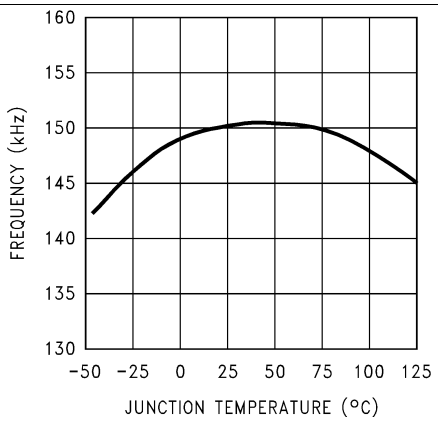

Figure 12. Switching Frequency

Copyright © 1999–2016, Texas Instruments Incorporated

Typical Characteristics (continued)

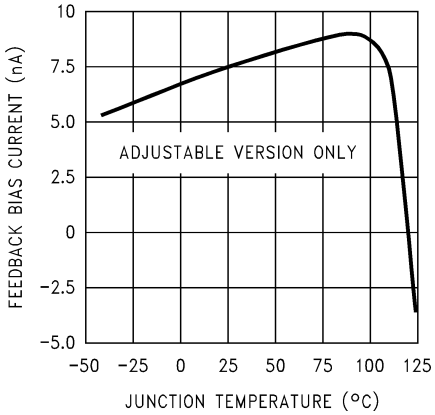

Figure 13. Feedback Pin Bias Current

8 Detailed Description

8.1 Overview

The LM2594 SIMPLE SWITCHER® regulator is an easy-to-use, nonsynchronous step-down DC-DC converter with a wide input voltage range from 45 V to up to 60 V for a HV version. The regulator is capable of delivering up to 0.5-A DC load current with excellent line and load regulation. These devices are available in fixed output voltages of 3.3-V, 5-V, 12-V, and an adjustable output version. The family requires few external components, and the pin arrangement was designed for simple, optimum PCB layout.

8.2 Functional Block Diagram

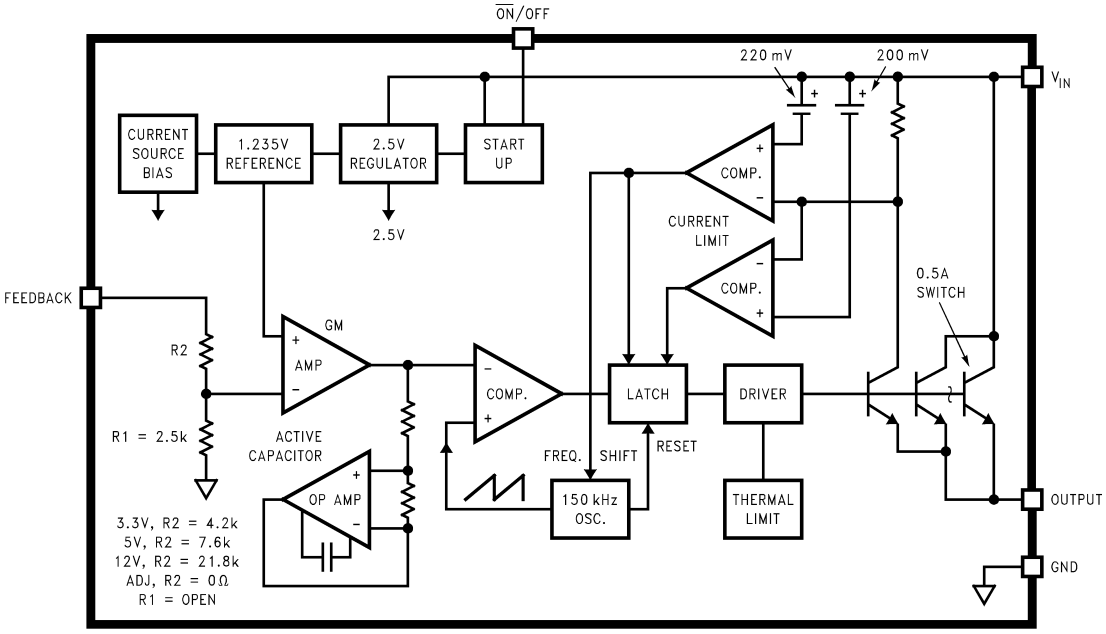

Copyright © 2016, Texas Instruments Incorporated

8.3 Feature Description

8.3.1 Delayed Start-Up

The circuit in Figure 14 uses the ON/OFF pin to provide a time delay between the time the input voltage is applied and the time the output voltage comes up (only the circuitry pertaining to the delayed start-up is shown). As the input voltage rises, the charging of capacitor C1 pulls the ON/OFF pin high, keeping the regulator off. Once the input voltage reaches its final value and the capacitor stops charging, the resistor R_2 pulls the ON/OFF pin low, thus allowing the circuit to start switching. Resistor R_1 is included to limit the maximum voltage applied to the ON/OFF pin (maximum of 25 V), reduces power supply noise sensitivity, and also limits the capacitor, C1, discharge current. When high input ripple voltage exists, avoid long delay time, because this ripple can be coupled into the ON/OFF pin and cause problems.

This delayed start-up feature is useful in situations where the input power source is limited in the amount of current it can deliver. It allows the input voltage to rise to a higher voltage before the regulator starts operating. Buck regulators require less input current at higher input voltages.

Copyright © 1999–2016, Texas Instruments Incorporated

Feature Description (continued)

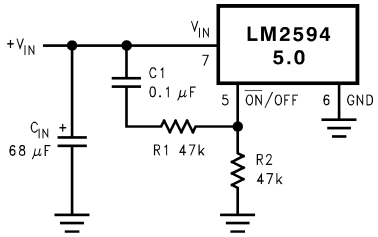

Figure 14. Delayed Start-Up

8.3.2 Undervoltage Lockout

Some applications require the regulator to remain off until the input voltage reaches a predetermined voltage. Figure 15 shows an undervoltage lockout feature applied to a buck regulator, while Figure 16 and Figure 17 apply the same feature to an inverting circuit. The circuit in Figure 16 features a constant threshold voltage for turnon and turnoff (Zener voltage plus approximately 1 V). If hysteresis is needed, the circuit in Figure 17 has a turnon voltage which is different than the turnoff voltage. The amount of hysteresis is approximately equal to the value of the output voltage. If Zener voltages greater than 25 V are used, an additional 47-kΩ resistor is needed from the ON/OFF pin to the ground pin to stay within the 25 V maximum limit of the ON/OFF pin.

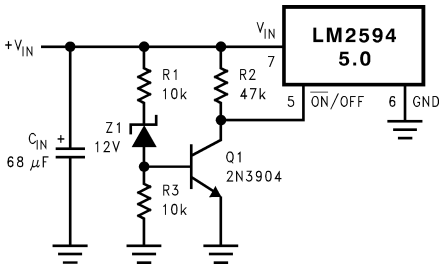

Figure 15. Undervoltage Lockout for Buck Regulator

8.3.3 Inverting Regulator

The circuit in Figure 18 converts a positive input voltage to a negative output voltage with a common ground. The circuit operates by bootstrapping the regulators ground pin to the negative output voltage, then grounding the feedback pin, the regulator senses the inverted output voltage and regulates it.

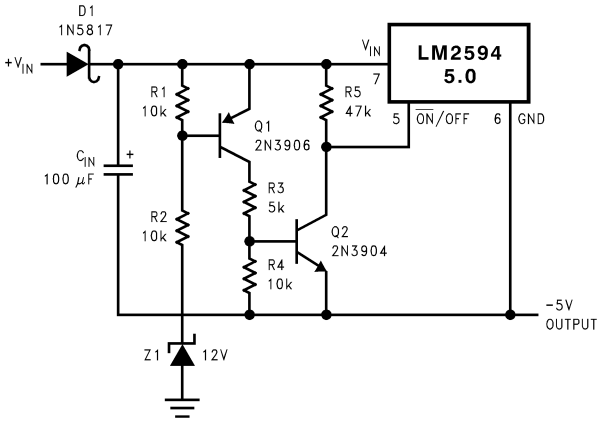

This circuit has an ON/OFF threshold of approximately 13 V.

Figure 16. Undervoltage Lockout for Inverting Regulator

Feature Description (continued)

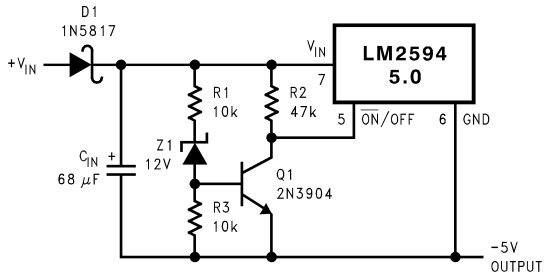

This circuit has hysteresis
Regulator starts switching at V_{IN} = 13 V
Regulator stops switching at V_{IN} = 8 V

Figure 17. Undervoltage Lockout With Hysteresis for Inverting Regulator

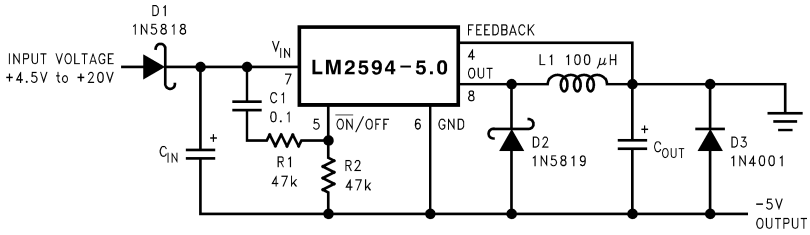

C_{IN} — 68-µF, 25-V Tant. Sprague 595D
120-µF, 35-V Elec. Panasonic HFQ
C_{OUT} — 22-µF, 20-V Tant. Sprague 595D
39-µF, 16-V Elec. Panasonic HFQ

Figure 18. Inverting −5-V Regulator With Delayed Start-Up

This example uses the LM2594-5 to generate a −5-V output, but other output voltages are possible by selecting other output voltage versions, including the adjustable version. Because this regulator topology can produce an output voltage that is either greater than or less than the input voltage, the maximum output current greatly depends on both the input and output voltage. Figure 19 provides a guide as to the amount of output load current possible for the different input and output voltage conditions.

The maximum voltage appearing across the regulator is the absolute sum of the input and output voltage, and this must be limited to a maximum of 40 V. For example, when converting 20 V to −12 V, the regulator would see 32 V between the input pin and ground pin. The LM2594 has a maximum input voltage specification of 40 V (60 V for the LM2594HV).

Additional diodes are required in this regulator configuration. Diode D1 is used to isolate input voltage ripple or noise from coupling through the C_{IN} capacitor to the output, under light or no load conditions. Also, this diode isolation changes the topology to closely resemble a buck configuration thus providing good closed loop stability. TI recommends a Schottky diode for low input voltages (because of its lower voltage drop), but for higher input voltages, a fast recovery diode could be used.

Without diode D3, when the input voltage is first applied, the charging current of C_{IN} can pull the output positive by several volts for a short period of time. Adding D3 prevents the output from going positive by more than a diode voltage.

Copyright © 1999–2016, Texas Instruments Incorporated

Feature Description (continued)

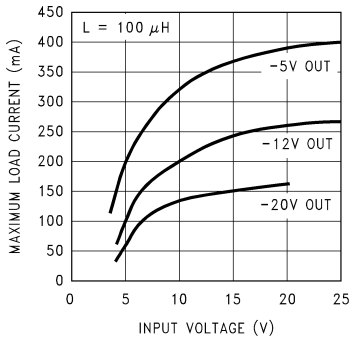

Figure 19. Inverting Regulator Typical Load Current

Because of differences in the operation of the inverting regulator, the standard design procedure is not used to select the inductor value. In the majority of designs, a 100-µH, 1-A inductor is the best choice. Capacitor selection can also be narrowed down to just a few values. Using the values shown in Figure 18 provides good results in the majority of inverting designs.

This type of inverting regulator can require relatively large amounts of input current when starting up, even with light loads. Input currents as high as the LM2594 current limit (approximately 0.8 A) are needed for at least 2 ms or more, until the output reaches its nominal output voltage. The actual time depends on the output voltage and the size of the output capacitor. Input power sources that are current limited or sources that can not deliver these currents without getting loaded down, may not work correctly. Because of the relatively high start-up currents required by the inverting topology, the delayed start-up feature (C1, R_1 and R_2) shown in Figure 18 is recommended. By delaying the regulator start-up, the input capacitor is allowed to charge up to a higher voltage before the switcher begins operating. A portion of the high input current needed for start-up is now supplied by the input capacitor (C_{IN}). For severe start-up conditions, the input capacitor can be made much larger than normal.

8.3.4 Inverting Regulator Shutdown Methods

To use the $\overline{ON}$/OFF pin in a standard buck configuration is simple; pull it below 1.3 V (at 25°C, referenced to ground) to turn regulator ON and pull it above 1.3 V to shut the regulator OFF. With the inverting configuration, some level shifting is required, because the ground pin of the regulator is no longer at ground, but is now setting at the negative output voltage level. Two different shutdown methods for inverting regulators are shown in Figure 20 and Figure 21.

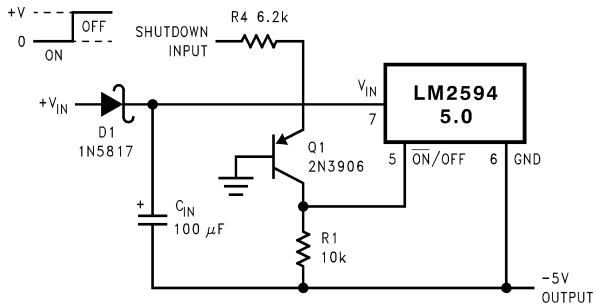

Figure 20. Inverting Regulator Ground Referenced Shutdown

Feature Description (continued)

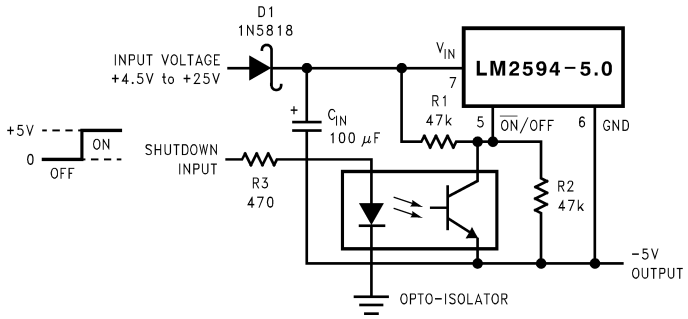

Figure 21. Inverting Regulator Ground Referenced Shutdown Using Opto Device

8.4 Device Functional Modes

8.4.1 Discontinuous Mode Operation

The selection guide chooses inductor values suitable for continuous mode operation, but for low current applications and high input voltages, a discontinuous mode design may be a better choice. Discontinuous mode would use an inductor that is physically smaller, and would need only one half to one third of the inductance value needed for a continuous mode design. The peak switch and inductor currents are higher in a discontinuous design, but at these low load currents (200 mA and below), the maximum switch current is still less than the switch current limit.

Discontinuous operation can have voltage waveforms that are considerably different than a continuous design. The output pin (switch) waveform can have some damped sinusoidal ringing present (see Figure 33). This ringing is normal for discontinuous operation, and is not caused by feedback loop instabilities. In discontinuous operation, there is a period of time where neither the switch nor the diode are conducting, and the inductor current has dropped to zero. During this time, a small amount of energy can circulate between the inductor and the switch or diode parasitic capacitance causing this characteristic ringing. Normally this ringing is not a problem, unless the amplitude becomes great enough to exceed the input voltage, and even then, there is very little energy present to cause damage.

Different inductor types and core materials produce different amounts of this characteristic ringing. Ferrite core inductors have very little core loss and therefore produce the most ringing. The higher core loss of powdered iron inductors produce less ringing. If desired, a series RC could be placed in parallel with the inductor to dampen the ringing.

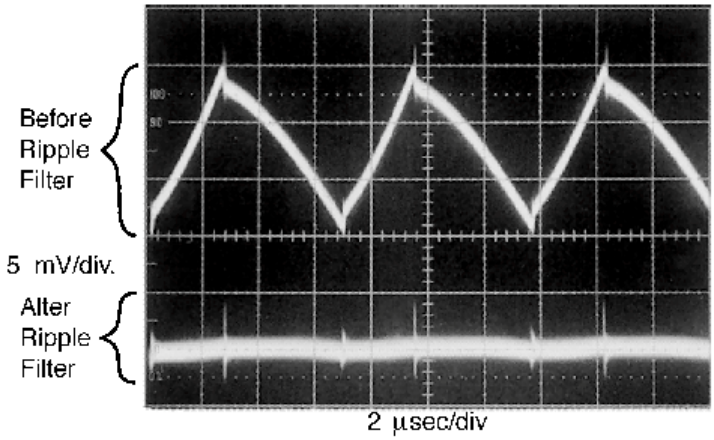

Figure 22. Post Ripple Filter Waveform

Copyright © 1999–2016, Texas Instruments Incorporated

9 Application and Implementation

NOTE

Information in the following applications sections is not part of the TI component specification, and TI does not warrant its accuracy or completeness. TI's customers are responsible for determining suitability of components for their purposes. Customers should validate and test their design implementation to confirm system functionality.

9.1 Application Information

9.1.1 Input Capacitor (C_{IN})

A low ESR aluminum or tantalum bypass capacitor is required between the input pin and ground pin. The capacitor must be located near the regulator using short leads. This capacitor prevents large voltage transients from appearing at the input, and provides the instantaneous current needed each time the switch turns on.

The important parameters for the input capacitor are the voltage rating and the RMS current rating. Because of the relatively high RMS currents flowing in the input capacitor of the buck regulator, this capacitor must be chosen for its RMS current rating rather than its capacitance or voltage ratings, although the capacitance value and voltage rating are directly related to the RMS current rating.

The RMS current rating of a capacitor could be viewed as a power rating of the capacitor. The RMS current flowing through the capacitors internal ESR produces power which causes the internal temperature of the capacitor to rise. The RMS current rating of a capacitor is determined by the amount of current required to raise the internal temperature approximately 10°C above an ambient temperature of 105°C. The ability of the capacitor to dissipate this heat to the surrounding air determines the amount of current the capacitor can safely sustain. Capacitors that are physically large and have a large surface area typically has a higher RMS current ratings. For a given capacitor value, a higher voltage electrolytic capacitor is physically larger than a lower voltage capacitor, and thus be able to dissipate more heat to the surrounding air, and therefore has a higher RMS current rating.

The consequences of operating an electrolytic capacitor above the RMS current rating is a shortened operating life. The higher temperature speeds up the evaporation of the electrolyte of the capacitor, resulting in eventual failure.

Selecting an input capacitor requires consulting the manufacturers data sheet for maximum allowable RMS ripple current. For a maximum ambient temperature of 40°C, a general guideline would be to select a capacitor with a ripple current rating of approximately 50% of the DC load current. For ambient temperatures up to 70°C, a current rating of 75% of the DC load current would be a good choice for a conservative design. The capacitor voltage rating must be at least 1.25 times greater than the maximum input voltage, and often a much higher voltage capacitor is needed to satisfy the RMS current requirements.

Figure 23 shows the relationship between an electrolytic capacitor value, its voltage rating, and the RMS current it is rated for. These curves were obtained from the Nichicon *PL* series of low-ESR, high-reliability electrolytic capacitors designed for switching regulator applications. Other capacitor manufacturers offer similar types of capacitors, but always check the capacitor data sheet.

Standard electrolytic capacitors typically have much higher ESR numbers, lower RMS current ratings and typically have a shorter operating lifetime.

Because of their small size and excellent performance, surface-mount solid tantalum capacitors are often used for input bypassing, but several precautions must be observed. A small percentage of solid tantalum capacitors can short if the inrush current rating is exceeded. This can happen at turnon when the input voltage is suddenly applied, and of course, higher input voltages produce higher inrush currents. Several capacitor manufacturers do a 100% surge current testing on their products to minimize this potential problem. If high turnon currents are expected, it may be necessary to limit this current by adding either some resistance or inductance before the tantalum capacitor, or select a higher voltage capacitor. As with aluminum electrolytic capacitors, the RMS ripple current rating must be sized to the load current.

Copyright © 1999–2016, Texas Instruments Incorporated

Application Information (continued)

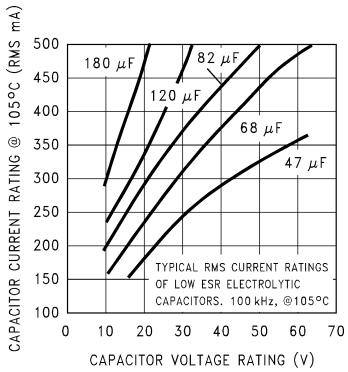

Figure 23. RMS Current Ratings for Low-ESR Electrolytic Capacitors (Typical)

9.1.2 Output Capacitor (C_{OUT})

An output capacitor is required to filter the output and provide regulator loop stability. Low impedance or low ESR Electrolytic or solid tantalum capacitors designed for switching regulator applications must be used. When selecting an output capacitor, the important capacitor parameters are; the 100-kHz Equivalent Series Resistance (ESR), the RMS ripple current rating, voltage rating, and capacitance value. For the output capacitor, the ESR value is the most important parameter.

The output capacitor requires an ESR value that has an upper and lower limit. For low output ripple voltage, a low ESR value is needed. This value is determined by the maximum allowable output ripple voltage, typically 1% to 2% of the output voltage. But if the ESR of the selected capacitor is extremely low, there is a possibility of an unstable feedback loop, resulting in an oscillation at the output. Using the capacitors listed in the tables, or similar types, provides design solutions under all conditions.

If very low output ripple voltage (less than 15 mV) is required, see *Output Voltage Ripple and Transients* for a post-ripple filter.

An aluminum electrolytic capacitor's ESR value is related to the capacitance value and its voltage rating. In most cases, Higher voltage electrolytic capacitors have lower ESR values (see Figure 24). Often, capacitors with much higher voltage ratings may be needed to provide the low ESR values required for low output ripple voltage.

The output capacitor for many different switcher designs often can be satisfied with only three or four different capacitor values and several different voltage ratings. See Figure 30 and Table 7 for typical capacitor values, voltage ratings, and manufacturers capacitor types.

Electrolytic capacitors are not recommended for temperatures below −25°C. The ESR rises dramatically at cold temperatures and typically rises three times at −25°C and as much as ten times at −40°C (see Figure 25).

Solid tantalum capacitors have a much better ESR specifications for cold temperatures and are recommended for temperatures below −25°C.

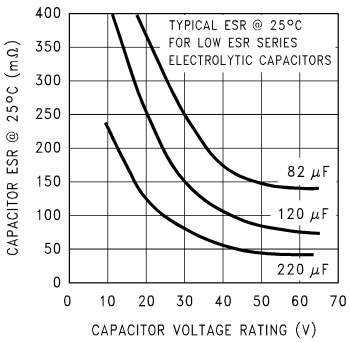

Figure 24. Capacitor ESR vs Capacitor Voltage Rating (Typical Low-ESR Electrolytic Capacitor)

Copyright © 1999–2016, Texas Instruments Incorporated

Application Information (continued)

Table 1. Output Capacitor and Feedforward Capacitor Selection Table

OUTPUT VOLTAGE (V)	THROUGH-HOLE OUTPUT CAPACITOR			SURFACE-MOUNT OUTPUT CAPACITOR		
	PANASONIC HFQ SERIES (μF/V)	NICHICON PL SERIES (μF/V)	FEEDFORWARD CAPACITOR	AVX TPS SERIES (μF/V)	SPRAGUE 595D SERIES (μF/V)	FEEDFORWARD CAPACITOR
1.2	220/25	220/25	0	220/10	220/10	0
4	180/25	180/25	4.7 nF	100/10	120/10	4.7 nF
6	82/25	82/25	4.7 nF	100/10	120/10	4.7 nF
9	82/25	82/25	3.3 nF	100/16	100/16	3.3 nF
12	82/25	82/25	2.2 nF	100/16	100/16	2.2 nF
15	82/25	82/25	1.5 nF	68/20	100/20	1.5 nF
24	82/50	120/50	1 nF	10/35	15/35	220 pF
28	82/50	120/50	820 pF	10/35	15/35	220 pF

9.1.3 Catch Diode

Buck regulators require a diode to provide a return path for the inductor current when the switch turns off. This must be a fast diode and must be located close to the LM2594 using short leads and short printed-circuit traces.

Because of their very fast switching speed and low forward voltage drop, Schottky diodes provide the best performance, especially in low output voltage applications (5 V and lower). Ultra-fast recovery, or high-efficiency rectifiers are also a good choice, but some types with an abrupt turnoff characteristic may cause instability or EMI problems. Ultra-fast recovery diodes typically have reverse recovery times of 50 ns or less. Rectifiers such as the 1N4001 series are much too slow and must not be used.

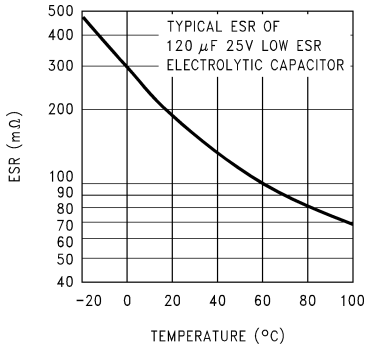

Figure 25. Capacitor ESR Change vs Temperature

Table 2. Diode Selection Table

VR	1-A DIODES			
	SURFACE MOUNT		THROUGH HOLE	
	SCHOTTKY	ULTRA FAST RECOVERY	SCHOTTKY	ULTRA FAST RECOVERY
20 V		All of these diodes are rated to at least 60 V.	1N5817	All of these diodes are rated to at least 60 V.
			SR102	
	MBRS130		1N5818	
30 V			SR103	
			11DQ03	
	MBRS140	MURS120	1N5819	MUR120
40 V	10BQ040	10BF10	SR104	HER101
	10MQ040		11DQ04	11DF1
50 V or more	MBRS160		SR105	
	10BQ050		MBR150	
	10MQ060		11DQ05	

Copyright © 1999–2016, Texas Instruments Incorporated

Table 2. Diode Selection Table (continued)

VR	1-A DIODES			
	SURFACE MOUNT		THROUGH HOLE	
	SCHOTTKY	ULTRA FAST RECOVERY	SCHOTTKY	ULTRA FAST RECOVERY
	MBRS1100		MBR160	
	10MQ090		SB160	
	SGL41-60		11DQ10	
	SS16			

9.1.4 Inductor Selection

All switching regulators have two basic modes of operation: continuous and discontinuous. The difference between the two types relates to the inductor current, whether it is flowing continuously, or if it drops to zero for a period of time in the normal switching cycle. Each mode has distinctively different operating characteristics, which can affect the regulators performance and requirements. Most switcher designs operates in the discontinuous mode when the load current is low.

The LM2594 (or any of the SIMPLE SWITCHER family) can be used for both continuous or discontinuous modes of operation.

In many cases the preferred mode of operation is the continuous mode. This mode offers greater output power, lower peak switch, inductor, and diode currents, and can have lower output ripple voltage. However, the continuous mode requires larger inductor values to keep the inductor current flowing continuously, especially at low output load currents and high input voltages.

To simplify the inductor selection process, an inductor selection guide (nomograph) was designed (see Figure 27 through Figure 30). This guide assumes that the regulator is operating in the continuous mode, and selects an inductor that allows a peak-to-peak inductor ripple current to be a certain percentage of the maximum design load current. This peak-to-peak inductor ripple current percentage is not fixed, but is allowed to change as different design load currents are selected. (See Figure 26.)

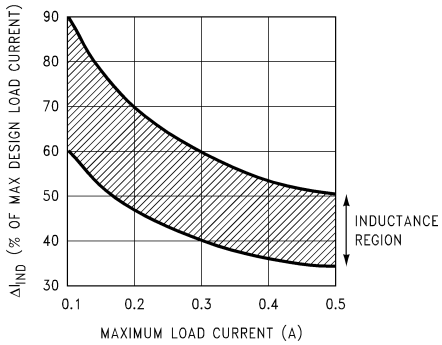

Figure 26. (ΔI_{IND}) Peak-to-Peak Inductor Ripple Current (as a Percentage of the Load Current) vs Load Current

By allowing the percentage of inductor ripple current to increase for low load currents, the inductor value and size can be kept relatively low.

When operating in the continuous mode, the inductor current waveform ranges from a triangular to a sawtooth type of waveform (depending on the input voltage), with the average value of this current waveform equal to the DC output load current.

Inductors are available in different styles such as pot core, toroid, E-core, bobbin core, and so forth, as well as different core materials, such as ferrites and powdered iron. The least expensive, the bobbin, rod or stick core, consists of wire wrapped on a ferrite bobbin. This type of construction makes for a inexpensive inductor; however, because the magnetic flux is not completely contained within the core, it generates more Electro-Magnetic Interference (EMI). This magnetic flux can induce voltages into nearby printed-circuit traces, thus causing problems with both the switching regulator operation and nearby sensitive circuitry, and can give incorrect scope readings because of induced voltages in the scope probe (see *Open Core Inductors*).

Copyright © 1999–2016, Texas Instruments Incorporated

The inductors listed in the selection chart include ferrite E-core construction for Schott ferrite bobbin core for Renco and Coilcraft, and powdered iron toroid for Pulse Engineering.

Exceeding the maximum current rating of the inductor may cause the inductor to overheat because of the copper wire losses, or the core may saturate. If the inductor begins to saturate, the inductance decreases rapidly and the inductor begins to look mainly resistive (the DC resistance of the winding). This can cause the switch current to rise very rapidly and force the switch into a cycle-by-cycle current limit, thus reducing the DC output load current. This can also result in overheating of the inductor and the LM2594. Different inductor types have different saturation characteristics, and this must be kept in mind when selecting an inductor.

The inductor manufacturers data sheets include current and energy limits to avoid inductor saturation.

For continuous mode operation, see the inductor selection graphs in Figure 27 through Figure 30.

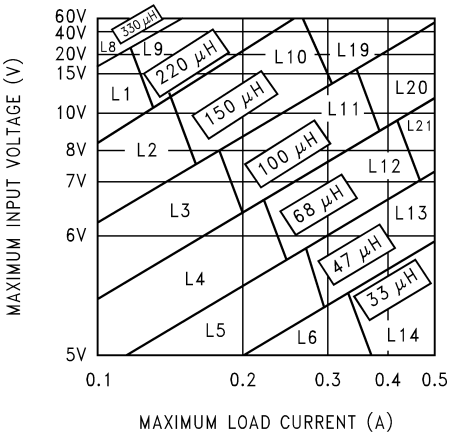

Figure 27. LM2594xx 3.3-V

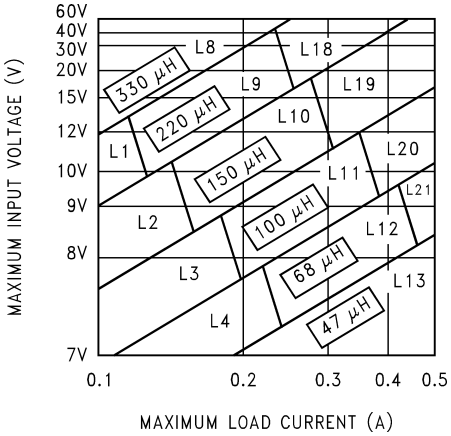

Figure 28. LM2594xx 5-V

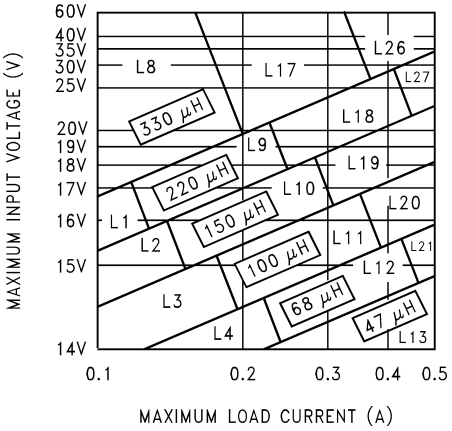

Figure 29. LM2594xx 12-V

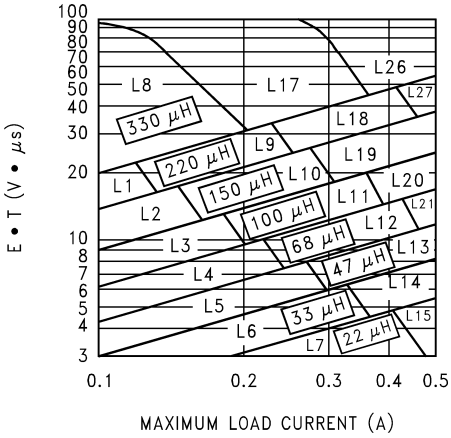

Figure 30. LM2594xx Adjustable Voltage

Table 3. Inductor Manufacturers Part Numbers

	INDUCTANCE (µH)	CURRENT (A)	SCHOTTKY		RENCO		PULSE ENGINEERING		COILCRAFT
			THROUGH HOLE	SURFACE MOUNT	THROUGH HOLE	SURFACE MOUNT	THROUGH HOLE	SURFACE MOUNT	SURFACE MOUNT
L1	220	0.18	67143910	67144280	RL-5470-3	RL1500-220	PE-53801	PE-53801-S	DO1608-224
L2	150	0.21	67143920	67144290	RL-5470-4	RL1500-150	PE-53802	PE-53802-S	DO1608-154
L3	100	0.26	67143930	67144300	RL-5470-5	RL1500-100	PE-53803	PE-53803-S	DO1608-104
L4	68	0.32	67143940	67144310	RL-1284-68	RL1500-68	PE-53804	PE-53804-S	DO1608-68
L5	47	0.37	67148310	67148420	RL-1284-47	RL1500-47	PE-53805	PE-53805-S	DO1608-473
L6	33	0.44	67148320	67148430	RL-1284-33	RL1500-33	PE-53806	PE-53806-S	DO1608-333
L7	22	0.60	67148330	67148440	RL-1284-22	RL1500-22	PE-53807	PE-53807-S	DO1608-223

Copyright © 1999–2016, Texas Instruments Incorporated

Table 3. Inductor Manufacturers Part Numbers (continued)

	INDUCTANCE (μH)	CURRENT (A)	SCHOTTKY		RENCO		PULSE ENGINEERING		COILCRAFT
			THROUGH HOLE	SURFACE MOUNT	THROUGH HOLE	SURFACE MOUNT	THROUGH HOLE	SURFACE MOUNT	SURFACE MOUNT
L8	330	0.26	67143950	67144320	RL-5470-2	RL1500-330	PE-53808	PE-53808-S	DO3308-334
L9	220	0.32	67143960	67144330	RL-5470-3	RL1500-220	PE-53809	PE-53809-S	DO3308-224
L10	150	0.39	67143970	67144340	RL-5470-4	RL1500-150	PE-53810	PE-53810-S	DO3308-154
L11	100	0.48	67143980	67144350	RL-5470-5	RL1500-100	PE-53811	PE-53811-S	DO3308-104
L12	68	0.58	67143990	67144360	RL-5470-6	RL1500-68	PE-53812	PE-53812-S	DO1608-683
L13	47	0.70	67144000	67144380	RL-5470-7	RL1500-47	PE-53813	PE-53813-S	DO3308-473
L14	33	0.83	67148340	67148450	RL-1284-33	RL1500-33	PE-53814	PE-53814-S	DO1608-333
L15	22	0.99	67148350	67148460	RL-1284-22	RL1500-22	PE-53815	PE-53815-S	DO1608-223
L16	15	1.24	67148360	67148470	RL-1284-15	RL1500-15	PE-53816	PE-53816-S	DO1608-153
L17	330	0.42	67144030	67144410	RL-5471-1	RL1500-330	PE-53817	PE-53817-S	DO3316-334
L18	220	0.55	67144040	67144420	RL-5471-2	RL1500-220	PE-53818	PE-53818-S	DO3316-224
L19	150	0.66	67144050	67144430	RL-5471-3	RL1500-150	PE-53819	PE-53819-S	DO3316-154
L20	100	0.82	67144060	67144440	RL-5471-4	RL1500-100	PE-53820	PE-53820-S	DO3316-104
L21	68	0.99	67144070	67144450	RL-5471-5	RL1500-68	PE-53821	PE-53821-S	DDO3316-683
L26	330	0.80	67144100	67144480	RL-5471-1	—	PE-53826	PE-53826-S	—
L27	220	1.00	67144110	67144490	RL-5471-2	—	PE-53827	PE-53827-S	—

9.1.5 Output Voltage Ripple and Transients

The output voltage of a switching power supply operating in the continuous mode contains a sawtooth ripple voltage at the switcher frequency, and may also contain short voltage spikes at the peaks of the sawtooth waveform.

The output ripple voltage is a function of the inductor sawtooth ripple current and the ESR of the output capacitor. A typical output ripple voltage can range from approximately 0.5% to 3% of the output voltage. To obtain low ripple voltage, the ESR of the output capacitor must be low; however, caution must be exercised when using extremely low ESR capacitors because they can affect the loop stability, resulting in oscillation problems. If very low output ripple voltage is needed (less than 15 mV), TI recommends a post ripple filter (see Figure 35). The inductance required is typically between 1 μH and 5 μH, with low DC resistance, to maintain good load regulation. A low ESR output filter capacitor is also required to assure good dynamic load response and ripple reduction. The ESR of this capacitor may be as low as desired, because it is out of the regulator feedback loop. Figure 22 shows a typical output ripple voltage, with and without a post ripple filter.

When observing output ripple with a scope, it is essential that a short, low inductance scope probe ground connection be used. Most scope probe manufacturers provide a special probe terminator which is soldered onto the regulator board, preferably at the output capacitor. This provides a very short scope ground, thus eliminating the problems associated with the 3 inch ground lead normally provided with the probe, and provides a much cleaner and more accurate picture of the ripple voltage waveform.

The voltage spikes are caused by the fast switching action of the output switch and the diode, the parasitic inductance of the output filter capacitor, and its associated wiring. To minimize these voltage spikes, the output capacitor must be designed for switching regulator applications, and the lead lengths must be kept very short. Wiring inductance, stray capacitance, as well as the scope probe used to evaluate these transients, all contribute to the amplitude of these spikes.

When a switching regulator is operating in the continuous mode, the inductor current waveform ranges from a triangular to a sawtooth type of waveform (depending on the input voltage). For a given input and output voltage, the peak-to-peak amplitude of this inductor current waveform remains constant. As the load current increases or decreases, the entire sawtooth current waveform also rises and falls. The average value (or the center) of this current waveform is equal to the DC load current.

If the load current drops to a low enough level, the bottom of the sawtooth current waveform reaches zero, and the switcher smoothly changes from a continuous to a discontinuous mode of operation. Most switcher designs (regardless how large the inductor value is) is forced to run discontinuous if the output is lightly loaded. This is a perfectly acceptable mode of operation.

Copyright © 1999–2016, Texas Instruments Incorporated

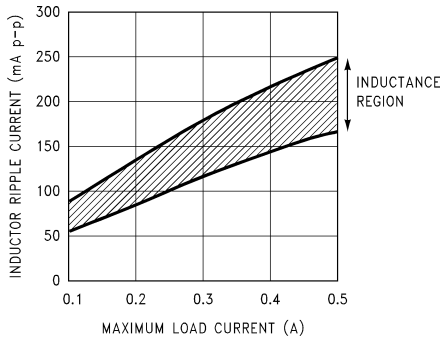

Figure 31. Peak-to-Peak Inductor Ripple Current vs Load Current

In a switching regulator design, knowing the value of the peak-to-peak inductor ripple current (ΔI_{IND}) can be useful for determining a number of other circuit parameters. Parameters such as, peak inductor or peak switch current, minimum load current before the circuit becomes discontinuous, output ripple voltage and output capacitor ESR can all be calculated from the peak-to-peak ΔI_{IND}. When the inductor nomographs shown in Figure 27 through Figure 30 are used to select an inductor value, the peak-to-peak inductor ripple current can immediately be determined. Figure 31 shows the range of (ΔI_{IND}) that can be expected for different load currents. Figure 31 also shows how the peak-to-peak inductor ripple current (ΔI_{IND}) changes as the designer goes from the lower border to the upper border (for a given load current) within an inductance region. The upper border represents a higher input voltage, while the lower border represents a lower input voltage (see *Inductor Selection*).

These curves are only correct for continuous mode operation, and only if the inductor selection guides are used to select the inductor value

Consider the following example:

V_{OUT} = 5 V, maximum load current of 300 mA

V_{IN} = 15 V, nominal, varying between 11 V and 20 V.

The selection guide in Figure 28 shows that the vertical line for a 0.3-A load current and the horizontal line for the 15-V input voltage intersect approximately midway between the upper and lower borders of the 150-µH inductance region. A 150-µH inductor allows a peak-to-peak inductor current (ΔI_{IND}) to flow a percentage of the maximum load current. Referring to Figure 31, follow the 0.3-A line approximately midway into the inductance region, and read the peak-to-peak inductor ripple current (ΔI_{IND}) on the left hand axis (approximately 150 mA_{p-p}).

As the input voltage increases to 20 V, it approaches the upper border of the inductance region, and the inductor ripple current increases. Figure 31 shows that for a load current of 0.3 A, the peak-to-peak inductor ripple current (ΔI_{IND}) is 150 mA with 15V in, and can range from 175 mA at the upper border (20 V in) to 120 mA at the lower border (11 V in).

Once the ΔI_{IND} value is known, the following formulas can be used to calculate additional information about the switching regulator circuit.

1. Peak Inductor or peak switch current

$$= \left(I_{LOAD} + \frac{\Delta I_{IND}}{2}\right) = \left(0.3A + \frac{0.150}{2}\right) = 0.375A$$

2. Minimum load current before the circuit becomes discontinuous

$$= \frac{\Delta I_{IND}}{2} = \frac{0.150}{2} = 0.075A$$

3. Output Ripple Voltage
   - = (ΔI_{IND}) × (ESR of C_{OUT})
   - = 0.150 A × 0.240 Ω = 36 mV_{p-p}
   - or

4. ESR of C_{OUT}

$$= \frac{\text{Output Ripple Voltage } (\Delta V_{OUT})}{\Delta I_{IND}}$$

$$= \frac{0.036V}{0.150A} = 0.240\Omega$$

9.1.6 Open Core Inductors

Another possible source of increased output ripple voltage or unstable operation is from an open core inductor. Ferrite bobbin or stick inductors have magnetic lines of flux flowing through the air from one end of the bobbin to the other end. These magnetic lines of flux induces a voltage into any wire or PCB copper trace that comes within the inductor's magnetic field. The strength of the magnetic field, the orientation and location of the PC copper trace to the magnetic field, and the distance between the copper trace and the inductor, determine the amount of voltage generated in the copper trace. Another way of looking at this inductive coupling is to consider the PCB copper trace as one turn of a transformer (secondary) with the inductor winding as the primary. Many millivolts can be generated in a copper trace located near an open core inductor which can cause stability problems or high output ripple voltage problems.

If unstable operation is seen, and an open core inductor is used, it is possible that the location of the inductor with respect to other PC traces may be the problem. To determine if this is the problem, temporarily raise the inductor away from the board by several inches and then check circuit operation. If the circuit now operates correctly, then the magnetic flux from the open core inductor is causing the problem. Substituting a closed core inductor such as a torroid or E-core corrects the problem, or re-arranging the PC layout may be necessary. Magnetic flux cutting the IC device ground trace, feedback trace, or the positive or negative traces of the output capacitor must be minimized.

Sometimes, locating a trace directly beneath a bobbin inductor provides good results, provided it is exactly in the center of the inductor (because the induced voltages cancel themselves out), but if it is off center one direction or the other, then problems could arise. If flux problems are present, even the direction of the inductor winding can make a difference in some circuits.

This discussion on open core inductors is not to frighten the user, but to alert the user on what kind of problems to watch out for when using them. Open core bobbin or *stick* inductors are an inexpensive, simple way of making a compact efficient inductor, and they are used by the millions in many different applications.

9.2 Typical Applications

9.2.1 Series Buck Regulator (Fixed Output)

Select components with higher voltage ratings for designs using the LM2594HV with an input voltage between 40 V and 60 V.

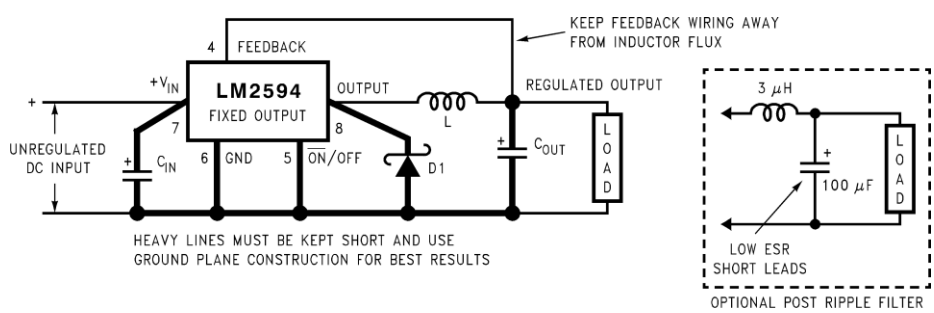

Copyright © 2016, Texas Instruments Incorporated

C_{IN} — 68-µF, 35-V, Aluminum Electrolytic Nichicon “PL Series”
C_{OUT} — 120-µF, 25-V Aluminum Electrolytic, Nichicon “PL Series”
D1 — 1-A, 40-V Schottky Rectifier, 1N5819
L1 — 100-µH, L20

Figure 32. Fixed Output Voltage Versions

Copyright © 1999–2016, Texas Instruments Incorporated

Typical Applications (continued)

9.2.1.1 Design Requirements

Table 4 lists the design parameters of this example.

Table 4. Design Parameters

PARAMETER	EXAMPLE VALUE
Regulated output voltage (3.3-V, 5-V or 12-V), V_{OUT}	5 V
Maximum DC input voltage, V_{IN}(max)	12 V
Maximum load current, I_{LOAD}(max)	0.4 A

9.2.1.2 Detailed Design Procedure

9.2.1.2.1 Inductor Selection (L1)

1. Select the correct inductor value selection guide from Figure 27, Figure 28, or Figure 29 (output voltages of 3.3 V, 5 V, or 12 V respectively). For all other voltages, see *Detailed Design Procedure* for the adjustable version.

   Use the inductor selection guide for the 5-V version shown in Figure 28.
2. From the inductor value selection guide, identify the inductance region intersected by the maximum input voltage line and the maximum load current line. Each region is identified by an inductance value and an inductor code (LXX).

   From the inductor value selection guide shown in Figure 28, the inductance region intersected by the 12-V horizontal line and the 0.4-A vertical line is 100 µH, and the inductor code is L20.
3. Select an appropriate inductor from the four manufacturer's part numbers listed in Table 3.

   The inductance value required is 100 µH. See row L20 of Table 3 and choose an inductor part number from any of the four manufacturers shown. (In most instance, both through-hole and surface-mount inductors are available.)

9.2.1.2.2 Output Capacitor Selection (C_{OUT})

1. In the majority of applications, low ESR (Equivalent Series Resistance) electrolytic capacitors between 82 µF and 220 µF and low-ESR, solid tantalum capacitors between 15 µF and 100 µF provide the best results. This capacitor must be located close to the IC using short capacitor leads and short copper traces. Do not use capacitors larger than 220 µF. For additional information, see *Output Capacitor (C_{OUT})*.
2. To simplify the capacitor selection procedure, see Figure 30 for quick design component selection. This table contains different input voltages, output voltages, and load currents, and lists various inductors and output capacitors that provides the best design solutions.

   From Figure 30, locate the 5-V output voltage section. In the load current column, choose the load current line that is closest to the current required for the application; for this example, use the 0.5-A line. In the maximum input voltage column, select the line that covers the input voltage required for the application; in this example, use the 15-V line. The rest of this line shows the recommended inductors and capacitors that provides the best overall performance.

   The capacitor list contains both through hole electrolytic and surface mount tantalum capacitors from four different capacitor manufacturers. TI recommends using both the manufacturers and the manufacturer's series that are listed in Table 5.

   In this example aluminum electrolytic capacitors from several different manufacturers are available with the range of ESR numbers needed:

   120-µF, 2-5V Panasonic HFQ Series
   120-µF, 2-5V Nichicon PL Series
3. The capacitor voltage rating for electrolytic capacitors must be at least 1.5 times greater than the output voltage, and often require much higher voltage ratings to satisfy the low ESR requirements for low output ripple voltage.

For a 5-V output, a capacitor voltage rating at least 7.5 V or more is required. But, in this example, even a low ESR, switching grade, 120-μF, 10-V aluminum electrolytic capacitor would exhibit approximately 400 mΩ of ESR (see Figure 24 for the ESR vs voltage rating). This amount of ESR would result in relatively high output ripple voltage. To reduce the ripple to 1% of the output voltage, or less, a capacitor with a higher voltage rating (lower ESR) must be selected. A 16-V or 25-V capacitor reduces the ripple voltage by approximately half.

9.2.1.2.3 Catch Diode Selection (D1)

1. The catch diode current rating must be at least 1.3 times greater than the maximum load current. Also, if the power supply design must withstand a continuous output short, the diode must have a current rating equal to the maximum current limit of the LM2594. The most stressful condition for this diode is an overload or shorted output condition.

   See Table 2. In this example, a 1-A, 20-V, 1N5817 Schottky diode provides the best performance, and will not be overstressed even for a shorted output.
2. The reverse voltage rating of the diode must be at least 1.25 times the maximum input voltage.
3. This diode must be fast (short reverse recovery time) and must be located close to the LM2594 using short leads and short printed circuit traces. Because of their fast switching speed and low forward voltage drop, Schottky diodes provide the best performance and efficiency, and must be the first choice, especially in low output voltage applications. Ultra-fast recovery, or high-efficiency rectifiers also provide good results. Ultra-fast recovery diodes typically have reverse recovery times of 50 ns or less. Rectifiers such as the 1N4001 must not be used because they are too slow.

9.2.1.2.4 Input Capacitor (C_{IN})

A low ESR aluminum or tantalum bypass capacitor is needed between the input pin and ground to prevent large voltage transients from appearing at the input. In addition, the RMS current rating of the input capacitor must be selected to be at least ½ the DC load current. The capacitor manufacturers data sheet must be checked to assure that this current rating is not exceeded. Figure 23 shows typical RMS current ratings for several different aluminum electrolytic capacitor values.

This capacitor must be located close to the IC using short leads and the voltage rating must be approximately 1.5 times the maximum input voltage.

If solid tantalum input capacitors are used, TI recommends that they be surge current tested by the manufacturer.

Use caution when using ceramic capacitors for input bypassing, because it may cause severe ringing at the V_{IN} pin.

The important parameters for the Input capacitor are the input voltage rating and the RMS current rating. With a nominal input voltage of 12 V, an aluminum electrolytic capacitor with a voltage rating greater than 18 V ($1.5 \times V_{IN}$) is necessary. The next higher capacitor voltage rating is 25 V.

The RMS current rating requirement for the input capacitor in a buck regulator is approximately ½ the DC load current. In this example, with a 400-mA load, a capacitor with a RMS current rating of at least 200 mA is needed. Figure 23 can be used to select an appropriate input capacitor. From the curves, locate the 25-V line and note which capacitor values have RMS current ratings greater than 200 mA. Either a 47-μF or 68-μF, 25-V capacitor could be used.

For a through hole design, a 68-μF, 25-V electrolytic capacitor (Panasonic HFQ series or Nichicon PL series or equivalent) would be adequate. Other types or other manufacturers' capacitors can be used provided the RMS ripple current ratings are adequate.

For surface-mount designs, solid tantalum capacitors are recommended. The TPS series available from AVX, and the 593D series from Sprague are both surge current tested.

For additional information, see *Input Capacitor (C_{IN})*.

Copyright © 1999–2016, Texas Instruments Incorporated

Table 5. LM2594xx Fixed Voltage Quick Design Component Selection Table

CONDITIONS			INDUCTOR		OUTPUT CAPACITOR			
					THROUGH HOLE		SURFACE MOUNT	
OUTPUT VOLTAGE (V)	LOAD CURRENT (A)	MAX INPUT VOLTAGE (V)	INDUCTANCE (μH)	INDUCTOR (#)	PANASONIC HFQ SERIES (μF/V)	NICHICON PL SERIES (μF/V)	AVX TPS SERIES (μF/V)	SPRAGUE 595D SERIES (μF/V)
3.3	0.5	5	33	L14	220/16	220/16	100/16	100/6.3
		7	47	L13	120/25	120/25	100/16	100/6.3
		10	68	L21	120/25	120/25	100/16	100/6.3
		40	100	L20	120/35	120/35	100/16	100/6.3
		6	68	L4	120/25	120/25	100/16	100/6.3
	0.2	10	150	L10	120/16	120/16	100/16	100/6.3
		40	220	L9	120/16	120/16	100/16	100/6.3
5	0.5	8	47	L13	180/16	180/16	100/16	33/25
		10	68	L21	180/16	180/16	100/16	33/25
		15	100	L20	120/25	120/25	100/16	33/25
		40	150	L19	120/25	120/25	100/16	33/25
		9	150	L10	82/16	82/16	100/16	33/25
	0.2	20	220	L9	120/16	120/16	100/16	33/25
		40	330	L8	120/16	120/16	100/16	33/25
12	0.5	15	68	L21	82/25	82/25	100/16	15/25
		18	150	L19	82/25	82/25	100/16	15/25
		30	220	L27	82/25	82/25	100/16	15/25
		40	330	L26	82/25	82/25	100/16	15/25
		15	100	L11	82/25	82/25	100/16	15/25
	0.2	20	220	L9	82/25	82/25	100/16	15/25
		40	330	L17	82/25	82/25	100/16	15/25

9.2.1.3 Application Curves

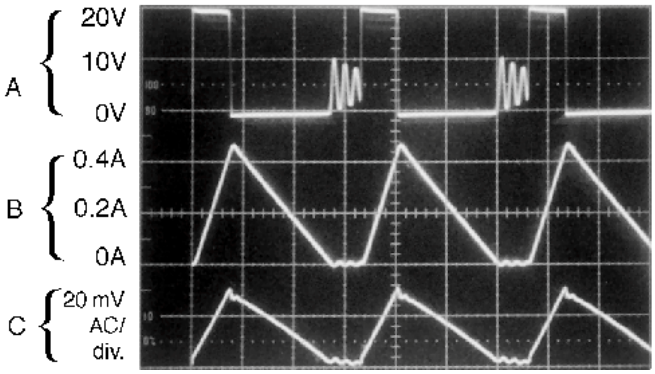

Discontinuous mode switching waveforms
V_{IN} = 20 V, V_{OUT} = 5 V, I_{LOAD} = 200 mA
L = 33 μH, C_{OUT} = 220 μF, C_{OUT} ESR = 60 mΩ
A: Output pin voltage, 10 V/div.
B: Inductor current, 0.2 A/div.
C: Output ripple voltage, 20 mV/div.

Figure 33. Horizontal Time Base: 2 μs/div

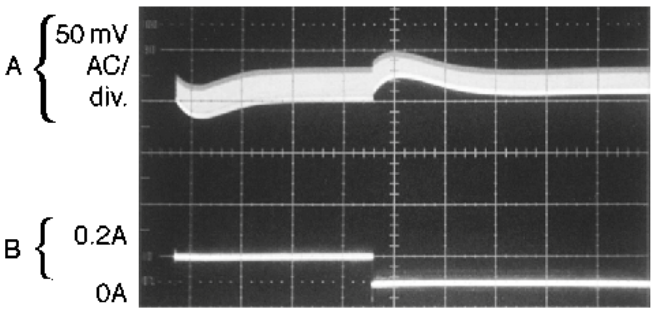

Load transient response for discontinuous mode
V_{IN} = 20 V, V_{OUT} = 5 V, I_{LOAD} = 100 mA to 200 mA
L = 33 μH, C_{OUT} = 220 μF, C_{OUT} ESR = 60 mΩ
A: Output voltage, 50 mV/div. (AC)
B: 100-mA to 200-mA load pulse

Figure 34. Horizontal Time Base: 200 μs/div

9.2.2 Series Buck Regulator (Adjustable Output)

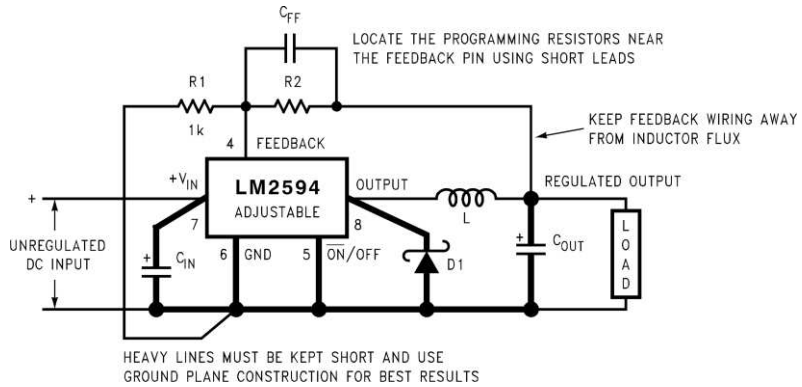

Copyright © 2016, Texas Instruments Incorporated

$$V_{OUT} = V_{REF}\left(1 + \frac{R_2}{R_1}\right) \quad \text{where } V_{REF} = 1.23V$$

$$R_2 = R_1\left(\frac{V_{OUT}}{V_{REF}} - 1\right)$$ Select R_1 to be approximately 1 kΩ, use a 1% resistor for best stability.

C_{IN} — 68-µF, 35-V, Aluminum Electrolytic Nichicon "PL Series"
C_{OUT} — 120-µF, 25-V Aluminum Electrolytic, Nichicon "PL Series"
D1 — 1-A, 40-V Schottky Rectifier, 1N5819
L1 — 100-µH, L20
R_1 — 1 kΩ, 1%
C_{FF} — See *Feedforward Capacitor (C_{FF})*

Figure 35. Adjustable Output Voltage Version

9.2.2.1 Design Requirements

Table 6 lists the design parameters of this example.

Table 6. Design Parameter

PARAMETER	EXAMPLE VALUE
Regulated output voltage, V_{OUT}	20 V
Maximum input voltage, V_{IN}(max)	28 V
Maximum load current, I_{LOAD}(max)	0.5 A
Switching frequency, F	Fixed at a nominal 150 kHz

9.2.2.2 Detailed Design Procedure

9.2.2.2.1 Programming Output Voltage

Selecting R_1 and R_2, as shown in Figure 35.

Use Equation 1 to select the appropriate resistor values.

$$V_{OUT} = V_{REF}\left(1 + \frac{R_2}{R_1}\right) \quad \text{where } V_{REF} = 1.23V \tag{1}$$

Select R_1 to be 1 kΩ, 1%. Solve for R_2 using Equation 2.

$$R_2 = R_1\left(\frac{V_{OUT}}{V_{REF}} - 1\right) = 1k\left(\frac{20V}{1.23V} - 1\right) \tag{2}$$

Select a value for R_1 between 240 Ω and 1.5 kΩ using Equation 3. The lower resistor values minimize noise pickup in the sensitive feedback pin. (For the lowest temperature coefficient and the best stability with time, use 1% metal film resistors.)

Copyright © 1999–2016, Texas Instruments Incorporated

$$R_2 = R_1 \left(\frac{V_{OUT}}{V_{REF}} - 1\right) \tag{3}$$

R_2 = 1k (16.26 − 1) = 15.26k, closest 1% value is 15.4 kΩ.

R_2 = 15.4 kΩ.

9.2.2.2.2 Inductor Selection (L1)

1. Calculate the inductor Volt microsecond constant E • T (V • μs) with Equation 4.

$$E \bullet T = (V_{IN} - V_{OUT} - V_{SAT}) \bullet \frac{V_{OUT} + V_D}{V_{IN} - V_{SAT} + V_D} \bullet \frac{1000}{150\ \text{kHz}} (V \bullet \mu s) \tag{4}$$

   where
   - V_{SAT} = internal switch saturation voltage = 0.9 V
   - V_D = diode forward voltage drop = 0.5 V

2. Calculate the inductor Volt • microsecond constant (E • T) with Equation 5.

$$E \bullet T = (28 - 20 - 0.9) \bullet \frac{20 + 0.5}{28 - 0.9 + 0.5} \bullet \frac{1000}{150} (V \bullet \mu s)$$

$$E \bullet T = (7.1) \bullet \frac{20.5}{27.6} \bullet 6.67\ (V \bullet \mu s) = 35.2\ (V \bullet \mu s) \tag{5}$$

3. Use the E • T value from the previous formula and match it with the E • T number on the vertical axis of the Inductor Value Selection Guide shown in Figure 30.

$$E \bullet T = 35.2\ (V \bullet \mu s) \tag{6}$$

4. On the horizontal axis, select the maximum load current: I_{LOAD}(max) = 0.5 A
5. Identify the inductance region intersected by the E • T value and the maximum load current value. Each region is identified by an inductance value and an inductor code (LXX).

   From the inductor value selection guide shown in Figure 30, the inductance region intersected by the 35 (V • μs) horizontal line and the 0.5-A vertical line is 150 μH, and the inductor code is L19.
6. Select an appropriate inductor from the four manufacturer's part numbers listed in Table 3.

   From Table 3, locate line L19, and select an inductor part number from the list of manufacturers' part numbers.

9.2.2.2.3 Output Capacitor Selection (C_{OUT})

1. In the majority of applications, low ESR electrolytic or solid tantalum capacitors between 82 μF and 220 μF provide the best results. This capacitor must be located close to the IC using short capacitor leads and short copper traces. Do not use capacitors larger than 220 μF. For additional information, see *Output Capacitor (C_{OUT})*.
2. To simplify the capacitor selection procedure, see Table 7 for a quick design guide. This table contains different output voltages, and lists various output capacitors that provides the best design solutions.

   From Table 7, locate the output voltage column. From that column, locate the output voltage closest to the output voltage in your application. In this example, select the 24-V line. Under *Output Capacitor (C_{OUT})*, select a capacitor from the list of through hole electrolytic or surface mount tantalum types from four different capacitor manufacturers. TI recommends that both the manufacturers and the manufacturers series that are listed in Table 7.

   In this example, through hole aluminum electrolytic capacitors from several different manufacturers are available.

   82-μF, 50-V Panasonic HFQ Series

   120-μF, 50-V Nichicon PL Series
3. The capacitor voltage rating must be at least 1.5 times greater than the output voltage, and often much higher voltage ratings are needed to satisfy the low ESR requirements needed for low output ripple voltage.

   For a 20-V output, a capacitor rating of at least 30-V or more is required. In this example, either a 35-V or 50-V capacitor would work. A 50-V rating was chosen because it has a lower ESR which provides a lower output ripple voltage.

Other manufacturers or other types of capacitors may also be used, provided the capacitor specifications (especially the 100 kHz ESR) closely match the types listed in Table 7. Refer to the capacitor manufacturers data sheet for this information.

9.2.2.2.4 Feedforward Capacitor (C_{FF})

For output voltages greater than approximately 10 V, an additional capacitor is required. The compensation capacitor is typically between 50 pF and 10 nF, and is wired in parallel with the output voltage setting resistor, R_2. It provides additional stability for high output voltages, low input or output voltages, and very low ESR output capacitors, such as solid tantalum capacitors calculated with Equation 7.

$$C_{FF} = \frac{1}{31 \times 10^3 \times R_2} \tag{7}$$

This capacitor type can be ceramic, plastic, silver mica, and so forth (because of the unstable characteristics of ceramic capacitors made with Z5U material, they are not recommended).

Table 7 contains feedforward capacitor values for various output voltages. In this example, a 1-nF capacitor is needed.

9.2.2.2.5 Catch Diode Selection (D1)

1. The catch diode current rating must be at least 1.3 times greater than the maximum load current. Also, if the power supply design must withstand a continuous output short, the diode must have a current rating equal to the maximum current limit of the LM2594. The most stressful condition for this diode is an overload or shorted output condition.

   See Table 2. Schottky diodes provide the best performance, and in this example a 1-A, 40-V, 1N5819 Schottky diode is a good choice. The 1-A diode rating is more than adequate and will not be overstressed even for a shorted output.
2. The reverse voltage rating of the diode must be at least 1.25 times the maximum input voltage.
3. This diode must be fast (short reverse recovery time) and must be placed close to the LM2594 using short leads and short printed circuit traces. Because of their fast switching speed and low forward voltage drop, Schottky diodes provide the best performance and efficiency, and must be the first choice, especially in low output voltage applications. Ultra-fast recovery or high-efficiency rectifiers are also good choices, but some types with an abrupt turnoff characteristic may cause instability or EMI problems. Ultra-fast recovery diodes typically have reverse recovery times of 50 ns or less. Rectifiers such as the 1N4001 series must not be used because they are too slow.

9.2.2.2.6 Input Capacitor (C_{IN})

A low ESR aluminum or tantalum bypass capacitor is required between the input pin and ground to prevent large voltage transients from appearing at the input. In addition, the RMS current rating of the input capacitor must be selected to be at least ½ the DC load current. The capacitor manufacturers data sheet must be checked to assure that this current rating is not exceeded. Figure 23 shows typical RMS current ratings for several different aluminum electrolytic capacitor values.

This capacitor must be located close to the IC using short leads and the voltage rating must be approximately 1.5 times the maximum input voltage.

If solid tantalum input capacitors are used, TI recommends that they be surge current tested by the manufacturer.

Use caution when using ceramic capacitors for input bypassing, because it may cause severe ringing at the V_{IN} pin.

The important parameters for the Input capacitor are the input voltage rating and the RMS current rating. With a nominal input voltage of 28 V, an aluminum electrolytic aluminum electrolytic capacitor with a voltage rating greater than 42 V (1.5 × V_{IN}) is required. Because the next higher capacitor voltage rating is 50 V, a 50-V capacitor must be used. The capacitor voltage rating of (1.5 × V_{IN}) is a conservative guideline, and can be modified somewhat if desired.

The RMS current rating requirement for the input capacitor of a buck regulator is approximately ½ the DC load current. In this example, with a 400 mA load, a capacitor with a RMS current rating of at least 200 mA is needed.

Copyright © 1999–2016, Texas Instruments Incorporated

Figure 23 shows curves that can be used to select an appropriate input capacitor. From the curves, locate the 50-V line and note which capacitor values have RMS current ratings greater than 200 mA. A 47-µF, 50-V low ESR electrolytic capacitor is needed.

For a through-hole design, a 47-µF, 50-V electrolytic capacitor (Panasonic HFQ series or Nichicon PL series or equivalent) would be adequate. Other types or other manufacturers' capacitors can be used provided the RMS ripple current ratings are adequate.

For surface mount designs, solid tantalum capacitors are recommended. The TPS series available from AVX, and the 593D series from Sprague are both surge current tested.

For additional information, see *Input Capacitor (C_{IN})*.

Table 7. Output Capacitor and Feedforward Capacitor Selection Table

OUTPUT VOLTAGE (V)	THROUGH-HOLE OUTPUT CAPACITOR			SURFACE-MOUNT OUTPUT CAPACITOR		
	PANASONIC HFQ SERIES (µF/V)	NICHICON PL SERIES (µF/V)	FEEDFORWARD CAPACITOR	AVX TPS SERIES (µF/V)	SPRAGUE 595D SERIES (µF/V)	FEEDFORWARD CAPACITOR
1.2	220/25	220/25	0	220/10	220/10	0
4	180/25	180/25	4.7 nF	100/10	120/10	4.7 nF
6	82/25	82/25	4.7 nF	100/10	120/10	4.7 nF
9	82/25	82/25	3.3 nF	100/16	100/16	3.3 nF
12	82/25	82/25	2.2 nF	100/16	100/16	2.2 nF
15	82/25	82/25	1.5 nF	68/20	100/20	1.5 nF
24	82/50	120/50	1 nF	10/35	15/35	220 pF
28	82/50	120/50	820 pF	10/35	15/35	220 pF

9.2.2.3 Application Curves

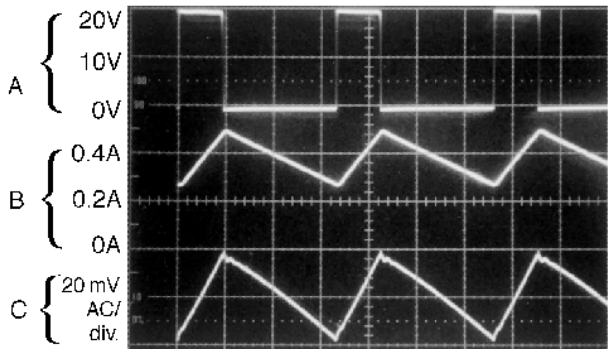

Continuous mode switching waveforms
V_{IN} = 20 V, V_{OUT} = 5 V, I_{LOAD} = 400 mA
L = 100 µH, C_{OUT} = 120 µF, C_{OUT} ESR = 140 mΩ
A: Output pin voltage, 10 V/div.
B: Inductor current, 0.2 A/div.
C: Output ripple voltage, 20 mV/div.

Figure 36. Horizontal Time Base: 2 µs/div

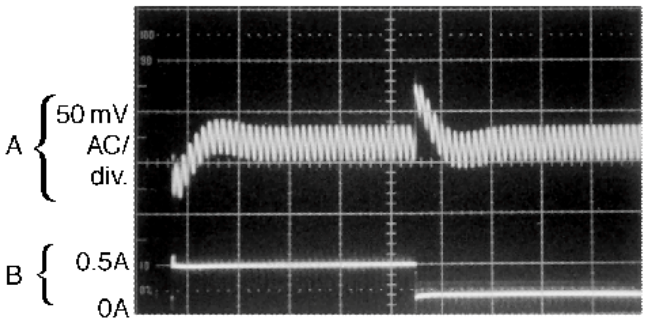

Load transient response for continuous mode
V_{IN} = 20 V, V_{OUT} = 5 V, I_{LOAD} = 200 mA to 500 mA
L = 100 µH, C_{OUT} = 120 µF, C_{OUT} ESR = 140 mΩ
A: Output voltage, 50 mV/div. (AC)
B: 200-mA to 500-mA load pulse

Figure 37. Horizontal Time Base: 50 µs/div

10 Power Supply Recommendations

The LM2594 is designed to operate from an input voltage supply up to 45 V and 60 V (HV version). This input supply must be well regulated and able to withstand maximum input current and maintain a stable voltage.

11 Layout

11.1 Layout Guidelines

As in any switching regulator, layout is very important. Rapidly switching currents associated with wiring inductance can generate voltage transients which can cause problems. For minimal inductance and ground loops, the wires indicated by heavy lines must be wide printed circuit traces and must be kept as short as possible. For best results, external components must be placed as close to the switcher IC as possible using ground plane construction or single point grounding.

If open core inductors are used, special care must be taken as to the location and positioning of this type of inductor. Allowing the inductor flux to intersect sensitive feedback, IC groundpath and C_{OUT} wiring can cause problems.

When using the adjustable version, take special care regarding as to the location of the feedback resistors and the associated wiring. Physically place both resistors near the IC, and route the wiring away from the inductor, especially an open core type of inductor.

11.2 Layout Example

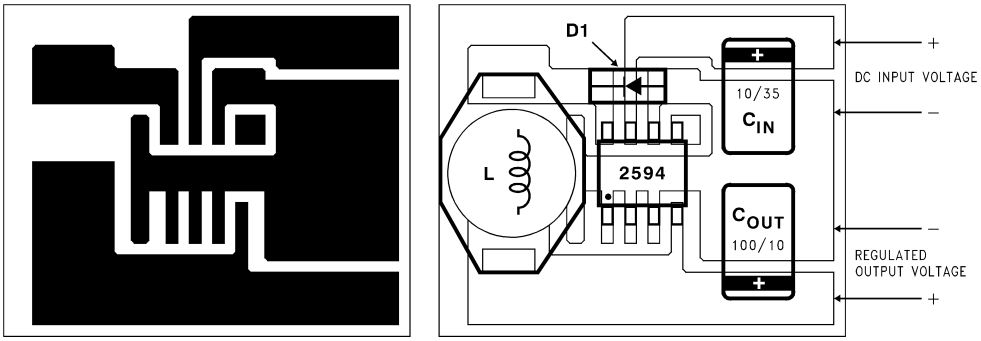

C_{IN} = 10-µF, 35-V, Solid Tantalum AVX, TPS series
C_{OUT} = 00-µF, 10-V Solid Tantalum AVX, TPS series
D1 = 1-A, 40-V Schottky Rectifier, surface mount
L1 = 100-µH, L20, Coilcraft DO33

Figure 38. Typical Surface-Mount PCB Layout, Fixed Output (2X Size)

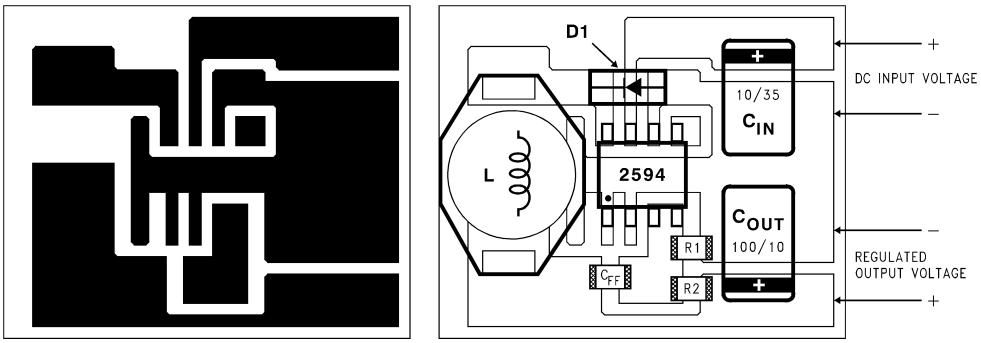

C_{IN} = 10-µF, 35-V, Solid Tantalum AVX, TPS series
C_{OUT} = 100-µF, 10-V Solid Tantalum AVX, TPS series
D1 = 1-A, 40-V Schottky Rectifier, surface mount
L1 = 100-µH, L20, Coilcraft DO33
R1 = 1 kΩ, 1%
R_2 = Use formula in Design Procedure
C_{FF} = See Table 7

Figure 39. Typical Surface-Mount PCB Layout, Adjustable Output (2X Size)

Copyright © 1999–2016, Texas Instruments Incorporated

11.3 Thermal Considerations

The LM2594xx is available in two packages: an 8-pin through-hole PDIP and an 8-pin surface-mount SOIC. Both packages are molded plastic with a copper lead frame. When the package is soldered to the printed-circuit board (PCB), the copper and the board are the heat sink for the LM2594 and the other heat producing components.

For best thermal performance, wide copper traces must be used and all ground and unused pins must be soldered to generous amounts of PCB copper, such as a ground plane (one exception to this is the output (switch pin, which must not have large areas of copper). Large areas of copper provide the best transfer of heat (lower thermal resistance) to the surrounding air, and even double-sided or multilayer boards provide a better heat path to the surrounding air. Unless power levels are small, sockets are not recommended because of the added thermal resistance it adds and the resultant higher junction temperatures.

Package thermal resistance and junction temperature rise numbers are all approximate, and there are many factors that affects the junction temperature. Some of these factors include board size, shape, thickness, position, location, and even board temperature. Other factors are trace width, printed-circuit copper area, copper thickness, single- or double-sided multilayer board, and the amount of solder on the board. The effectiveness of the PCB to dissipate heat also depends on the size, quantity, and spacing of other components on the board. Furthermore, some of these components such as the catch diode adds heat to the PCB and the heat can vary as the input voltage changes. For the inductor, depending on the physical size, type of core material, and the DC resistance, it could either act as a heat sink taking heat away from the board, or it could add heat to the board.

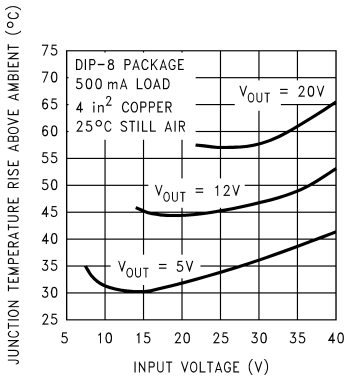

Circuit Data for Temperature Rise Curve (8-Pin PDIP)

Capacitors	Through hole electrolytic
Inductor	Through hole, Schott, 100 μH
Diode	Through hole, 1-A, 40-V, Schottky
PCB	4 square inches single sided 2 oz. copper (0.0028″)

Figure 40. Junction Temperature Rise, 8-Pin PDIP

Thermal Considerations (continued)

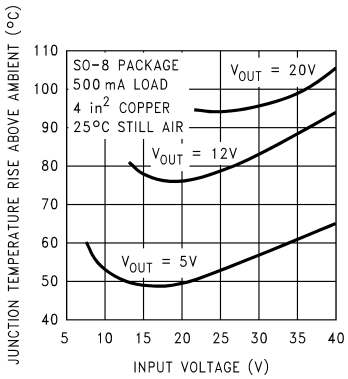

Circuit Data for Temperature Rise Curve
(Surface Mount)

Capacitors	Surface mount tantalum, molded *D* size
Inductor	Surface mount, Coilcraft DO33, 100 μH
Diode	Surface mount, 1-A, 40-V, Schottky
PCB	4 square inches single sided 2 oz. copper (0.0028″)

Figure 41. Junction Temperature Rise, 8-Pin SOIC

Figure 40 and Figure 41 show the LM2594 junction temperature rise above ambient temperature with a 500-mA load for various input and output voltages. This data was taken with the circuit operating as a buck switcher with all components mounted on a PCB to simulate the junction temperature under actual operating conditions. This curve is typical, and can be used for a quick check on the maximum junction temperature for various conditions, but keep in mind that there are many factors that can affect the junction temperature.

Copyright © 1999–2016, Texas Instruments Incorporated

12 Device and Documentation Support

12.1 Related Links

The table below lists quick access links. Categories include technical documents, support and community resources, tools and software, and quick access to sample or buy.

Table 8. Related Links

PARTS	PRODUCT FOLDER	SAMPLE & BUY	TECHNICAL DOCUMENTS	TOOLS & SOFTWARE	SUPPORT & COMMUNITY
LM2594	Click here	Click here	Click here	Click here	Click here
LM2594HV	Click here	Click here	Click here	Click here	Click here

12.2 Community Resources

The following links connect to TI community resources. Linked contents are provided "AS IS" by the respective contributors. They do not constitute TI specifications and do not necessarily reflect TI's views; see TI's Terms of Use.

TI E2E™ Online Community ***TI's Engineer-to-Engineer (E2E) Community.*** Created to foster collaboration among engineers. At e2e.ti.com, you can ask questions, share knowledge, explore ideas and help solve problems with fellow engineers.

Design Support ***TI's Design Support*** Quickly find helpful E2E forums along with design support tools and contact information for technical support.

12.3 Trademarks

E2E is a trademark of Texas Instruments.
SIMPLE SWITCHER is a registered trademark of Texas Instruments.
All other trademarks are the property of their respective owners.

12.4 Electrostatic Discharge Caution

These devices have limited built-in ESD protection. The leads should be shorted together or the device placed in conductive foam during storage or handling to prevent electrostatic damage to the MOS gates.

12.5 Glossary

SLYZ022 — *TI Glossary*.

This glossary lists and explains terms, acronyms, and definitions.

13 Mechanical, Packaging, and Orderable Information

The following pages include mechanical, packaging, and orderable information. This information is the most current data available for the designated devices. This data is subject to change without notice and revision of this document. For browser-based versions of this data sheet, refer to the left-hand navigation.

PACKAGING INFORMATION

Orderable Device	Status (1)	Package Type	Package Drawing	Pins	Package Qty	Eco Plan (2)	Lead/Ball Finish (6)	MSL Peak Temp (3)	Op Temp (°C)	Device Marking (4/5)	Samples
LM2594HVM-12/NOPB	ACTIVE	SOIC	D	8	95	Green (RoHS & no Sb/Br)	CU SN	Level-1-260C-UNLIM	-40 to 125	2594H M-12	Samples
LM2594HVM-3.3/NOPB	ACTIVE	SOIC	D	8	95	Green (RoHS & no Sb/Br)	CU SN	Level-1-260C-UNLIM	-40 to 125	2594H M-3.3	Samples
LM2594HVM-5.0	NRND	SOIC	D	8	95	TBD	Call TI	Call TI	-40 to 125	2594H M-5.0	
LM2594HVM-5.0/NOPB	ACTIVE	SOIC	D	8	95	Green (RoHS & no Sb/Br)	CU SN	Level-1-260C-UNLIM	-40 to 125	2594H M-5.0	Samples
LM2594HVM-ADJ	NRND	SOIC	D	8	95	TBD	Call TI	Call TI	-40 to 125	2594H M-ADJ	
LM2594HVM-ADJ/NOPB	ACTIVE	SOIC	D	8	95	Green (RoHS & no Sb/Br)	CU SN	Level-1-260C-UNLIM	-40 to 125	2594H M-ADJ	Samples
LM2594HVMX-12/NOPB	ACTIVE	SOIC	D	8	2500	Green (RoHS & no Sb/Br)	CU SN	Level-1-260C-UNLIM	-40 to 125	2594H M-12	Samples
LM2594HVMX-3.3/NOPB	ACTIVE	SOIC	D	8	2500	Green (RoHS & no Sb/Br)	CU SN	Level-1-260C-UNLIM	-40 to 125	2594H M-3.3	Samples
LM2594HVMX-5.0/NOPB	ACTIVE	SOIC	D	8	2500	Green (RoHS & no Sb/Br)	CU SN	Level-1-260C-UNLIM	-40 to 125	2594H M-5.0	Samples
LM2594HVMX-ADJ/NOPB	ACTIVE	SOIC	D	8	2500	Green (RoHS & no Sb/Br)	CU SN	Level-1-260C-UNLIM	-40 to 125	2594H M-ADJ	Samples
LM2594HVN-12/NOPB	ACTIVE	PDIP	P	8	40	Green (RoHS & no Sb/Br)	CU SN	Level-1-NA-UNLIM	-40 to 125	LM2594HV N-12 P+	Samples
LM2594HVN-3.3/NOPB	ACTIVE	PDIP	P	8	40	Green (RoHS & no Sb/Br)	CU SN	Level-1-NA-UNLIM	-40 to 125	LM2594HV N-3.3 P+	Samples
LM2594HVN-5.0/NOPB	ACTIVE	PDIP	P	8	40	Green (RoHS & no Sb/Br)	CU SN	Level-1-NA-UNLIM	-40 to 125	LM2594HV N-5.0 P+	Samples
LM2594HVN-ADJ/NOPB	ACTIVE	PDIP	P	8	40	Green (RoHS & no Sb/Br)	CU SN	Level-1-NA-UNLIM	-40 to 125	LM2594HV N-ADJ P+	Samples
LM2594M-12/NOPB	ACTIVE	SOIC	D	8	95	Green (RoHS & no Sb/Br)	CU SN	Level-1-260C-UNLIM	-40 to 125	2594 M-12	Samples
LM2594M-3.3	NRND	SOIC	D	8	95	TBD	Call TI	Call TI	-40 to 125	2594 M-3.3	
LM2594M-3.3/NOPB	ACTIVE	SOIC	D	8	95	Green (RoHS & no Sb/Br)	CU SN	Level-1-260C-UNLIM	-40 to 125	2594 M-3.3	Samples

Orderable Device	Status (1)	Package Type	Package Drawing	Pins	Package Qty	Eco Plan (2)	Lead/Ball Finish (6)	MSL Peak Temp (3)	Op Temp (°C)	Device Marking (4/5)	Samples
LM2594M-5.0	NRND	SOIC	D	8	95	TBD	Call TI	Call TI	-40 to 125	2594 M-5.0	
LM2594M-5.0/NOPB	ACTIVE	SOIC	D	8	95	Green (RoHS & no Sb/Br)	CU SN	Level-1-260C-UNLIM	-40 to 125	2594 M-5.0	Samples
LM2594M-ADJ/NOPB	ACTIVE	SOIC	D	8	95	Green (RoHS & no Sb/Br)	CU SN	Level-1-260C-UNLIM	-40 to 125	2594 M-ADJ	Samples
LM2594MX-12/NOPB	ACTIVE	SOIC	D	8	2500	Green (RoHS & no Sb/Br)	CU SN	Level-1-260C-UNLIM	-40 to 125	2594 M-12	Samples
LM2594MX-3.3/NOPB	ACTIVE	SOIC	D	8	2500	Green (RoHS & no Sb/Br)	CU SN	Level-1-260C-UNLIM	-40 to 125	2594 M-3.3	Samples
LM2594MX-5.0/NOPB	ACTIVE	SOIC	D	8	2500	Green (RoHS & no Sb/Br)	CU SN	Level-1-260C-UNLIM	-40 to 125	2594 M-5.0	Samples
LM2594MX-ADJ/NOPB	ACTIVE	SOIC	D	8	2500	Green (RoHS & no Sb/Br)	CU SN	Level-1-260C-UNLIM	-40 to 125	2594 M-ADJ	Samples
LM2594N-12/NOPB	ACTIVE	PDIP	P	8	40	Green (RoHS & no Sb/Br)	CU SN	Level-1-NA-UNLIM	-40 to 125	LM2594N -12 P+	Samples
LM2594N-3.3/NOPB	ACTIVE	PDIP	P	8	40	Green (RoHS & no Sb/Br)	CU SN	Level-1-NA-UNLIM	-40 to 125	LM2594N -3.3 P+	Samples
LM2594N-5.0/NOPB	ACTIVE	PDIP	P	8	40	Green (RoHS & no Sb/Br)	CU SN	Level-1-NA-UNLIM	-40 to 125	LM2594N -5.0 P+	Samples
LM2594N-ADJ/NOPB	ACTIVE	PDIP	P	8	40	Green (RoHS & no Sb/Br)	CU SN	Level-1-NA-UNLIM	-40 to 125	LM2594N -ADJ P+	Samples

(1) The marketing status values are defined as follows:
ACTIVE: Product device recommended for new designs.
LIFEBUY: TI has announced that the device will be discontinued, and a lifetime-buy period is in effect.
NRND: Not recommended for new designs. Device is in production to support existing customers, but TI does not recommend using this part in a new design.
PREVIEW: Device has been announced but is not in production. Samples may or may not be available.
OBSOLETE: TI has discontinued the production of the device.

(2) **RoHS:** TI defines "RoHS" to mean semiconductor products that are compliant with the current EU RoHS requirements for all 10 RoHS substances, including the requirement that RoHS substance do not exceed 0.1% by weight in homogeneous materials. Where designed to be soldered at high temperatures, "RoHS" products are suitable for use in specified lead-free processes. TI may reference these types of products as "Pb-Free".
RoHS Exempt: TI defines "RoHS Exempt" to mean products that contain lead but are compliant with EU RoHS pursuant to a specific EU RoHS exemption.
Green: TI defines "Green" to mean the content of Chlorine (Cl) and Bromine (Br) based flame retardants meet JS709B low halogen requirements of <=1000ppm threshold. Antimony trioxide based flame retardants must also meet the <=1000ppm threshold requirement.

(3) MSL, Peak Temp. - The Moisture Sensitivity Level rating according to the JEDEC industry standard classifications, and peak solder temperature.

(4) There may be additional marking, which relates to the logo, the lot trace code information, or the environmental category on the device.

(5) Multiple Device Markings will be inside parentheses. Only one Device Marking contained in parentheses and separated by a "~" will appear on a device. If a line is indented then it is a continuation of the previous line and the two combined represent the entire Device Marking for that device.

(6) Lead/Ball Finish - Orderable Devices may have multiple material finish options. Finish options are separated by a vertical ruled line. Lead/Ball Finish values may wrap to two lines if the finish value exceeds the maximum column width.

Important Information and Disclaimer: The information provided on this page represents TI's knowledge and belief as of the date that it is provided. TI bases its knowledge and belief on information provided by third parties, and makes no representation or warranty as to the accuracy of such information. Efforts are underway to better integrate information from third parties. TI has taken and continues to take reasonable steps to provide representative and accurate information but may not have conducted destructive testing or chemical analysis on incoming materials and chemicals. TI and TI suppliers consider certain information to be proprietary, and thus CAS numbers and other limited information may not be available for release.

In no event shall TI's liability arising out of such information exceed the total purchase price of the TI part(s) at issue in this document sold by TI to Customer on an annual basis.

TAPE AND REEL INFORMATION

REEL DIMENSIONS

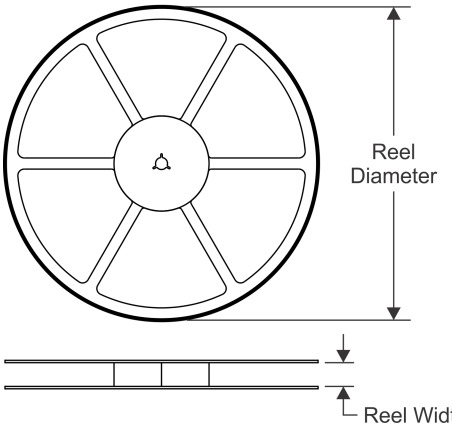

TAPE DIMENSIONS

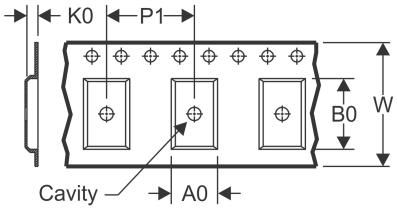

A0	Dimension designed to accommodate the component width
B0	Dimension designed to accommodate the component length
K0	Dimension designed to accommodate the component thickness
W	Overall width of the carrier tape
P1	Pitch between successive cavity centers

QUADRANT ASSIGNMENTS FOR PIN 1 ORIENTATION IN TAPE

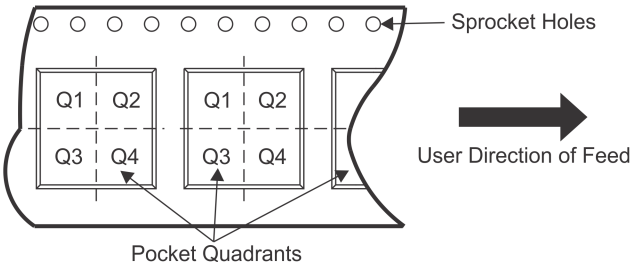

*All dimensions are nominal

Device	Package Type	Package Drawing	Pins	SPQ	Reel Diameter (mm)	Reel Width W1 (mm)	A0 (mm)	B0 (mm)	K0 (mm)	P1 (mm)	W (mm)	Pin1 Quadrant
LM2594HVMX-12/NOPB	SOIC	D	8	2500	330.0	12.4	6.5	5.4	2.0	8.0	12.0	Q1
LM2594HVMX-3.3/NOPB	SOIC	D	8	2500	330.0	12.4	6.5	5.4	2.0	8.0	12.0	Q1
LM2594HVMX-5.0/NOPB	SOIC	D	8	2500	330.0	12.4	6.5	5.4	2.0	8.0	12.0	Q1
LM2594HVMX-ADJ/NOPB	SOIC	D	8	2500	330.0	12.4	6.5	5.4	2.0	8.0	12.0	Q1
LM2594MX-12/NOPB	SOIC	D	8	2500	330.0	12.4	6.5	5.4	2.0	8.0	12.0	Q1
LM2594MX-3.3/NOPB	SOIC	D	8	2500	330.0	12.4	6.5	5.4	2.0	8.0	12.0	Q1
LM2594MX-5.0/NOPB	SOIC	D	8	2500	330.0	12.4	6.5	5.4	2.0	8.0	12.0	Q1
LM2594MX-ADJ/NOPB	SOIC	D	8	2500	330.0	12.4	6.5	5.4	2.0	8.0	12.0	Q1

TAPE AND REEL BOX DIMENSIONS

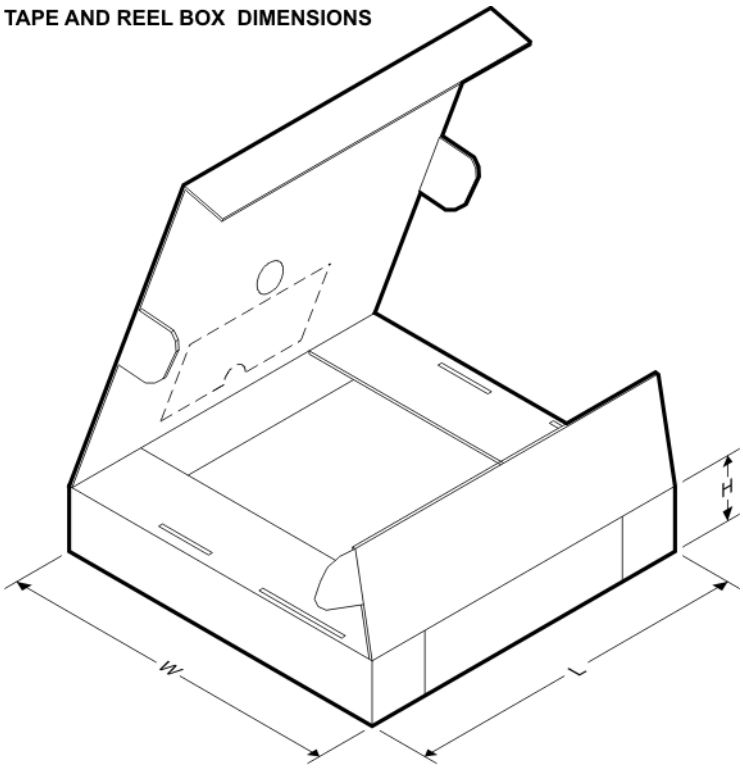

*All dimensions are nominal

Device	Package Type	Package Drawing	Pins	SPQ	Length (mm)	Width (mm)	Height (mm)
LM2594HVMX-12/NOPB	SOIC	D	8	2500	367.0	367.0	35.0
LM2594HVMX-3.3/NOPB	SOIC	D	8	2500	367.0	367.0	35.0
LM2594HVMX-5.0/NOPB	SOIC	D	8	2500	367.0	367.0	35.0
LM2594HVMX-ADJ/NOPB	SOIC	D	8	2500	367.0	367.0	35.0
LM2594MX-12/NOPB	SOIC	D	8	2500	367.0	367.0	35.0
LM2594MX-3.3/NOPB	SOIC	D	8	2500	367.0	367.0	35.0
LM2594MX-5.0/NOPB	SOIC	D	8	2500	367.0	367.0	35.0
LM2594MX-ADJ/NOPB	SOIC	D	8	2500	367.0	367.0	35.0

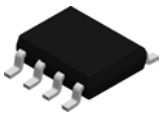

PACKAGE OUTLINE

D0008A

SOIC - 1.75 mm max height

SMALL OUTLINE INTEGRATED CIRCUIT

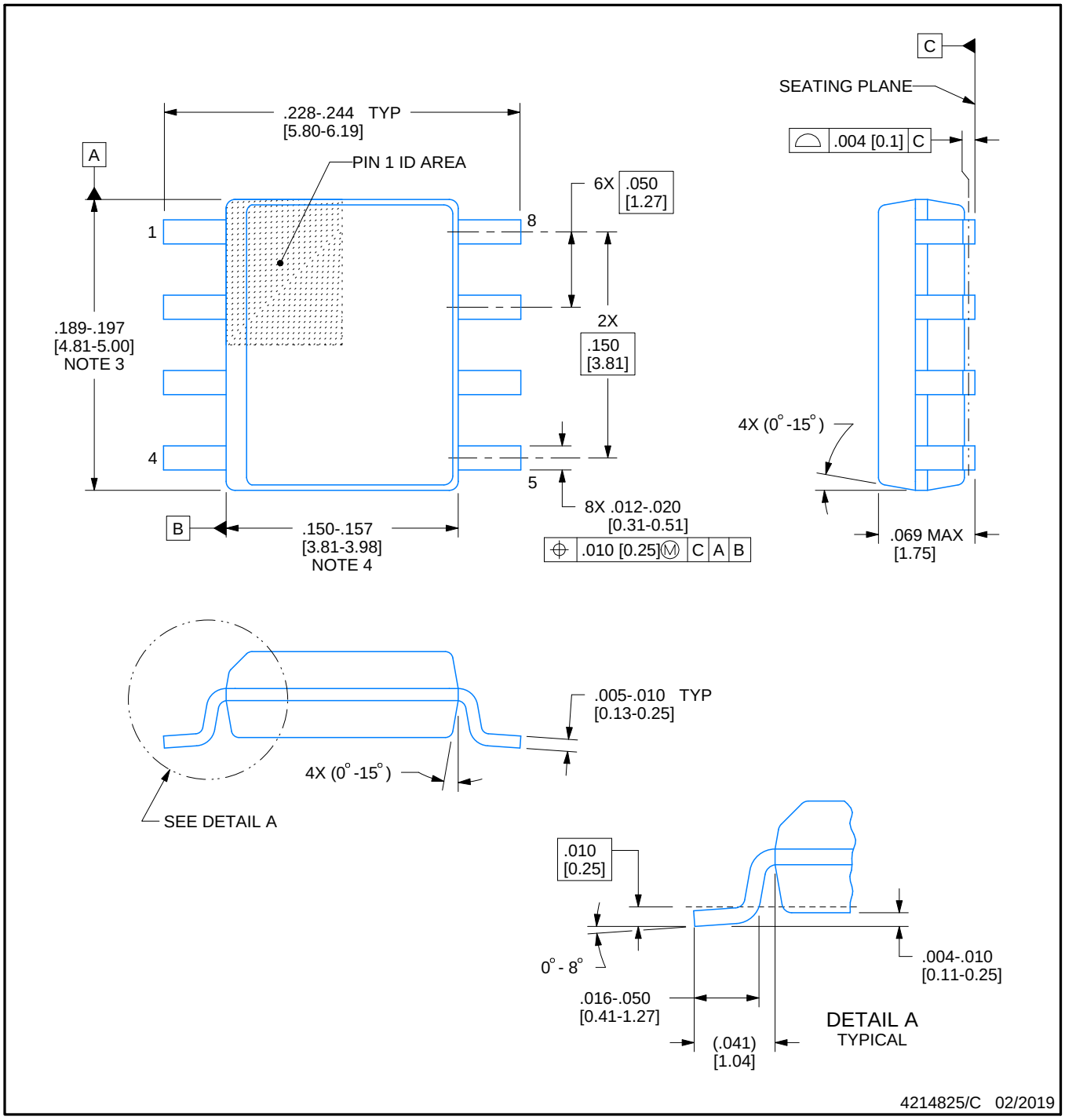

NOTES:

1. Linear dimensions are in inches [millimeters]. Dimensions in parenthesis are for reference only. Controlling dimensions are in inches. Dimensioning and tolerancing per ASME Y14.5M.
2. This drawing is subject to change without notice.
3. This dimension does not include mold flash, protrusions, or gate burrs. Mold flash, protrusions, or gate burrs shall not exceed .006 [0.15] per side.
4. This dimension does not include interlead flash.
5. Reference JEDEC registration MS-012, variation AA.

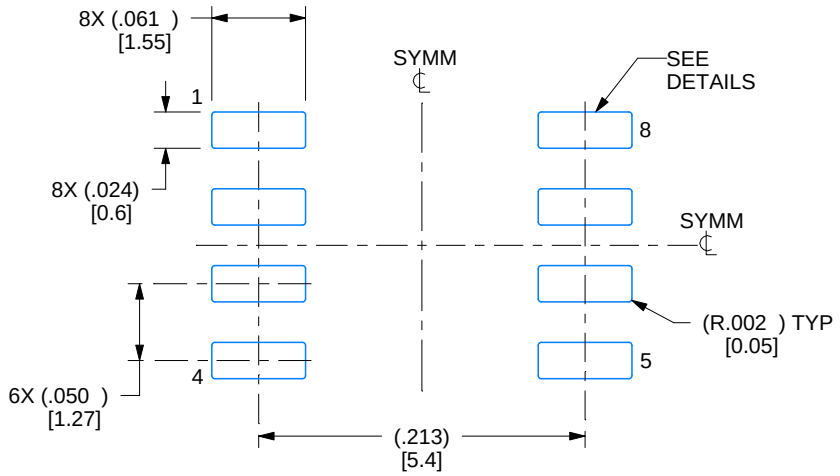

LAND PATTERN EXAMPLE
EXPOSED METAL SHOWN
SCALE:8X

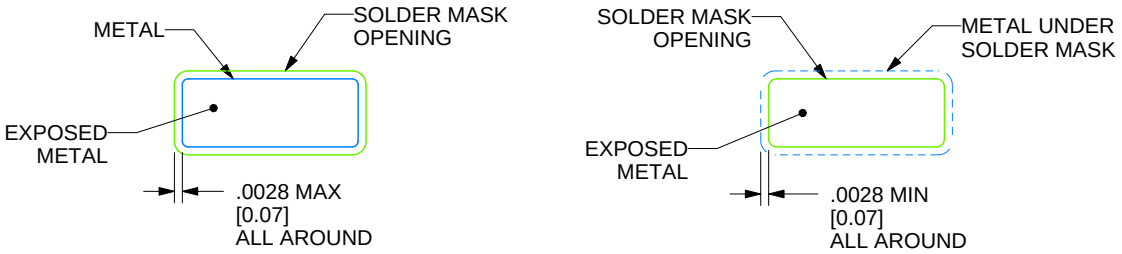

SOLDER MASK DETAILS

4214825/C 02/2019

NOTES: (continued)

6. Publication IPC-7351 may have alternate designs.
7. Solder mask tolerances between and around signal pads can vary based on board fabrication site.

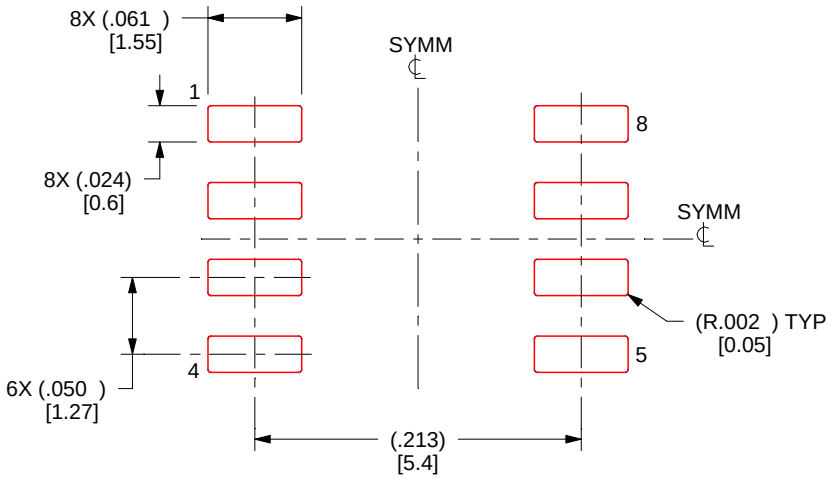

SOLDER PASTE EXAMPLE
BASED ON .005 INCH [0.125 MM] THICK STENCIL
SCALE:8X

4214825/C 02/2019

NOTES: (continued)

8. Laser cutting apertures with trapezoidal walls and rounded corners may offer better paste release. IPC-7525 may have alternate design recommendations.
9. Board assembly site may have different recommendations for stencil design.

P (R–PDIP–T8) PLASTIC DUAL–IN–LINE PACKAGE

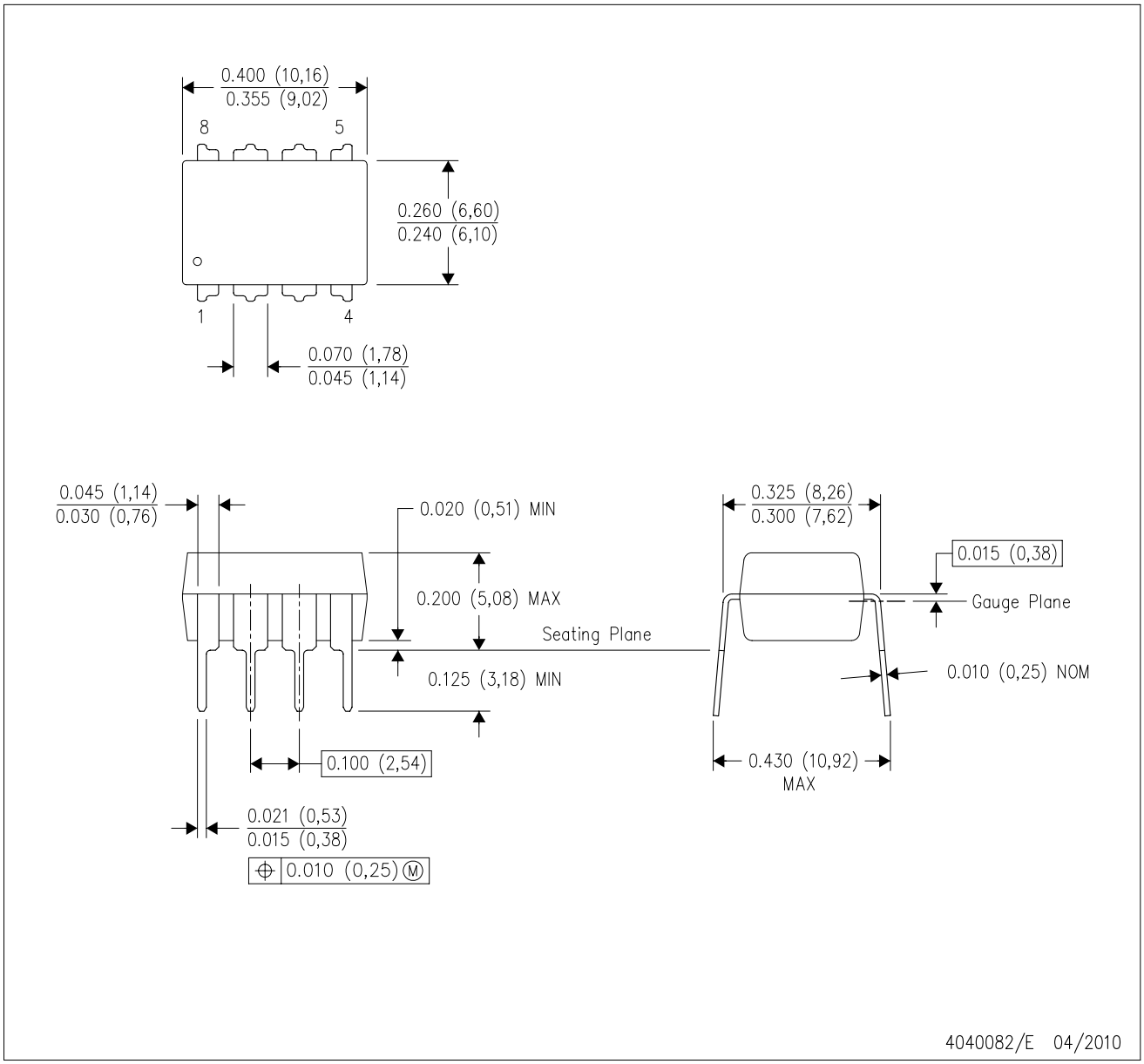

NOTES:
A. All linear dimensions are in inches (millimeters).
B. This drawing is subject to change without notice.
C. Falls within JEDEC MS–001 variation BA.

IMPORTANT NOTICE AND DISCLAIMER

TI PROVIDES TECHNICAL AND RELIABILITY DATA (INCLUDING DATASHEETS), DESIGN RESOURCES (INCLUDING REFERENCE DESIGNS), APPLICATION OR OTHER DESIGN ADVICE, WEB TOOLS, SAFETY INFORMATION, AND OTHER RESOURCES “AS IS” AND WITH ALL FAULTS, AND DISCLAIMS ALL WARRANTIES, EXPRESS AND IMPLIED, INCLUDING WITHOUT LIMITATION ANY IMPLIED WARRANTIES OF MERCHANTABILITY, FITNESS FOR A PARTICULAR PURPOSE OR NON-INFRINGEMENT OF THIRD PARTY INTELLECTUAL PROPERTY RIGHTS.

These resources are intended for skilled developers designing with TI products. You are solely responsible for (1) selecting the appropriate TI products for your application, (2) designing, validating and testing your application, and (3) ensuring your application meets applicable standards, and any other safety, security, or other requirements. These resources are subject to change without notice. TI grants you permission to use these resources only for development of an application that uses the TI products described in the resource. Other reproduction and display of these resources is prohibited. No license is granted to any other TI intellectual property right or to any third party intellectual property right. TI disclaims responsibility for, and you will fully indemnify TI and its representatives against, any claims, damages, costs, losses, and liabilities arising out of your use of these resources.

TI’s products are provided subject to TI’s Terms of Sale (www.ti.com/legal/termsofsale.html) or other applicable terms available either on ti.com or provided in conjunction with such TI products. TI’s provision of these resources does not expand or otherwise alter TI’s applicable warranties or warranty disclaimers for TI products.

Mailing Address: Texas Instruments, Post Office Box 655303, Dallas, Texas 75265
Copyright © 2019, Texas Instruments Incorporated

Looking for pricing, stock, or lifecycle information?

Click below to explore more details on WIN SOURCE:

- View LM2594HVMX-5.0/NOPB on WIN SOURCE
- Texas Instruments Information

Optimize Your Supply Chain with WIN SOURCE Solutions

- Global Sourcing Solution
- Obsolete Management
- Cost Control Management
- Shortage Management
- Alternative Solution
- Excess Inventory Management