# THE DATASHEET OF

# LM4130CIM5X-2.5

www.win-source.net 0086-755-83957316

# LM4130 Precision Micropower Low Dropout Voltage Reference

**Check for Samples: LM4130**

## FEATURES

- **Small SOT23-5 package**
- **High output voltage accuracy 0.05%**
- **Low Temperature Coefficient 10 ppm/°C**
- **Stable with capacitive loads to 100µF**
- **Low dropout voltage ≤275 mV @ 10 mA**
- **Supply Current ≤75 µA**
- **Full accuracy −40°C to 85°C**
- **Extended operation to 125°C**
- **Excellent load and line regulation**
- **Output current 20 mA**
- **Output impedance < 1Ω**
- **Voltage options: 2.500V and 4.096V**

## APPLICATIONS SUMMARY

- **Portable, battery powered equipment**
- **Instrumentation and process control**
- **Automotive & Industrial**
- **Test equipment**
- **Data acquisition systems**
- **Precision regulators**
- **Battery chargers**
- **Base stations**
- **Communications**
- **Medical equipment**
- **Servo systems**

## DESCRIPTION

The LM4130 family of precision voltage references performs comparable to the best laser-trimmed bipolar references, but in cost effective CMOS technology. Key to this break through is the use of EEPROM registers for correction of curvature, tempco, and accuracy on a CMOS bandgap architecture that allows package level programming to overcome assembly shift. The shifts in voltage accuracy and tempco during assembly of die into plastic packages limit the accuracy of references trimmed with laser techniques.

Unlike other LDO references, the LM4130 requires no output capacitor. Neither is a buffer amplifier required, even with loads up to 20mA. These advantages and the SOT23 packaging are important for cost-critical and space-critical applications.

Series references provide lower power consumption than shunt references, since they don't have to idle the maximum possible load current under no load conditions. This advantage, the low quiescent current (75µA), and the low dropout voltage(275mV) make the LM4130 ideal for battery-powered solutions.

The LM4130 is available in five grades (A, B, C, D and E) for greater flexibility. The best grade devices (A) have an initial accuracy of 0.05% with ensured temperature coefficient of 10ppm/°C or less, while the lowest grade parts (E) have an initial accuracy of 0.5% and a tempco of 30ppm/°C.

### Connection Diagram and Pin Configuration

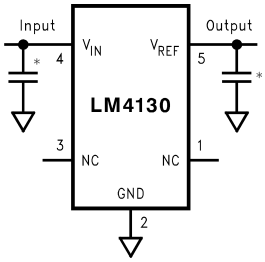


*Optional, Recommended for improved transient response and input noise reduction.
(See Application Information)

Please be aware that an important notice concerning availability, standard warranty, and use in critical applications of Texas Instruments semiconductor products and disclaimers thereto appears at the end of this data sheet.

All trademarks are the property of their respective owners.

PRODUCTION DATA information is current as of publication date. Products conform to specifications per the terms of the Texas Instruments standard warranty. Production processing does not necessarily include testing of all parameters.

Copyright © 1999–2013, Texas Instruments Incorporated

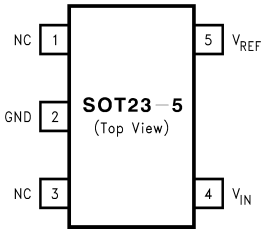


Refer to the Ordering Information Table in this Data Sheet for Specific Part Number

**Figure 1. SOT23-5 Surface Mount Package**

**Table 1. SOT23-5 Package Marking InformationOnly four fields of marking are possible on the SOT23-5's small surface. This table gives the meaning of the four fields.**

| Field Information |
|---|
| First Field: |
| R = Reference |
| Second and Third Field: |
| 03 = 2.50V Voltage Option |
| 04 = 4.096V Voltage Option |
| Fourth Field: |
| A-E = Initial Reference Voltage Tolerance and Temperature Coefficient |
| A = ±0.05%, 10ppm/°C |
| B = ±0.2%, 10ppm/°C |
| C = ±0.1%, 20ppm/°C |
| D = ±0.4%, 20ppm/°C |
| E = ±0.5%, 30ppm/°C |

These devices have limited built-in ESD protection. The leads should be shorted together or the device placed in conductive foam during storage or handling to prevent electrostatic damage to the MOS gates.

## Absolute Maximum Ratings (1)

| | |
|---|---|
| Maximum Voltage on any Input | −0.3V to 6V |
| Output Short-Circuit Duration | Indefinite |
| Power Dissipation ($T_A$ = 25°C) | 350 mW |
| (2) | |
| ESD Susceptibility (3) | |
| Human Body Model | 2 kV |
| Machine Model | 200V |
| Lead Temperature: | |
| Soldering, (10 sec.) | +260°C |
| Vapor Phase (60 sec.) | +215°C |
| Infrared (15 sec.) | +220°C |

(1) Absolute Maximum Ratings indicate limits beyond which damage to the device may occur. Operating Ratings indicate conditions for which the device is intended to be functional, but do not ensure specific performance limits. For ensured specifications and test conditions, see Electrical Characteristics. The ensured specifications apply only for the test conditions listed. Some performance characteristics may degrade when the device is not operated under the listed test conditions.

(2) Without PCB copper enhancements. The maximum power dissipation must be de-rated at elevated temperatures and is limited by $T_{JMAX}$ (maximum junction temperature), $\theta_{J-A}$ (junction to ambient thermal resistance) and $T_A$ (ambient temperature). The maximum power dissipation at any temperature is: $PDiss_{MAX} = (T_{JMAX} - T_A)/\theta_{J-A}$ up to the value listed in the Absolute Maximum Ratings. $\theta_{J-A}$ for SOT23-5 package is 220°C/W, $T_{JMAX}$ = 125°C.

(3) The human body model is a 100 pF capacitor discharged through a 1.5 kΩ resistor into each pin. The machine model is a 200 pF capacitor discharged directly into each pin.


Copyright © 1999–2013, Texas Instruments Incorporated

## Operating Range [1]

| | |
|---|---|
| Storage Temperature Range | −65°C to +150°C |
| Operating Temperature Range | −40°C to +85°C |

(1) Absolute Maximum Ratings indicate limits beyond which damage to the device may occur. Operating Ratings indicate conditions for which the device is intended to be functional, but do not ensure specific performance limits. For ensured specifications and test conditions, see Electrical Characteristics. The ensured specifications apply only for the test conditions listed. Some performance characteristics may degrade when the device is not operated under the listed test conditions.

Copyright © 1999–2013, Texas Instruments Incorporated

## LM4130-2.500
## Electrical Characteristics

Unless otherwise specified $V_{CC}$ = 5V, $I_{LOAD}$ = 0 $T_A$ = 25°C. Limits with standard typeface are for $T_A$ = 25°C, and limits in **boldface type** apply over the operating temperature range.

| Symbol | Parameter | Conditions | Min (1) | Typ (2) | Max (1) | Units |
|---|---|---|---|---|---|---|
| $V_{REF}$ | Output Voltage Initial Accuracy<br>LM4130A-2.500<br>LM4130B-2.500<br>LM4130C-2.500<br>LM4130D-2.500<br>LM4130E-2.500 | | | | <br>±0.05<br>±0.2<br>±0.1<br>±0.4<br>±0.5 | % |
| $TCV_{REF}$/°C (3) | Temperature Coefficient | | | | | ppm/°C |
| | LM4130A, B | 0°C ≤ $T_A$ ≤ +85°C<br>−40°C ≤ $T_A$ ≤ +85°C | | | 10<br>**20** | |
| | LM4130C, D | | | | **20** | |
| | LM4130E | | | | **30** | |
| $\Delta V_{REF}/\Delta V_{IN}$ | Line Regulation | $I_{LOAD}$ = 100µA | | | | ppm/V |
| | | $V_{REF}$ + 200 mV ≤ $V_{IN}$ ≤ 5.5V | | 30 | 100 | |
| | | $V_{REF}$ + 400 mV ≤ $V_{IN}$ ≤ 5.5V | | | **150** | |
| $\Delta V_{REF}/\Delta I_{LOAD}$ | Load Regulation | 0 mA ≤ $I_{LOAD}$ ≤ 20 mA | | 25 | 60<br>**80** | ppm/mA |
| $\Delta V_{REF}$ | Long-Term Stability (4) | 1000 Hrs | | 50 | | ppm |
| | Thermal Hysteresis (5) | −40°C ≤ $T_A$ ≤ +125°C | | 50 | | |
| $V_{IN}$ - $V_{REF}$ | Dropout Voltage (6) | $I_{LOAD}$ = 10 mA | | | 275<br>**400** | mV |
| $V_N$ | Output Noise Voltage | 0.1 Hz to 10 Hz | | 150 | | $\mu V_{PP}$ |
| $I_S$ | Supply Current | | | 50 | 75<br>**90** | µA |
| $I_{SC}$ | Short Circuit Current | | 30 | | 60 | mA |
| | | | | | **65** | mA |

(1) Limits are 100% production tested at 25°C. Limits over the operating temperature range are ensured through correlation using Statistical Quality Control (SQC) methods. The limits are used to calculate TI's Average Outgoing Quality Level (AOQL).
(2) Typical numbers are at 25°C and represent the most likely parametric norm.
(3) Temperature coefficient is measured by the "Box" method; i.e., the maximum $\Delta V_{REF}$ is divided by the maximum ΔT.
(4) Long term stability is $V_{REF}$ @25°C measured during 1000 hrs.
(5) Thermal hysteresis is defined as the change in +25°C output voltage before and after cycling the device from −40°C to 125°C.
(6) Dropout voltage is defined as the minimum input to output differential at which the output voltage drops by 0.5% below the value measured with a 5V input.


Copyright © 1999–2013, Texas Instruments Incorporated

## LM4130-4.096
## Electrical Characteristics

Unless otherwise specified $V_{CC}$ = 5.0V, $I_{LOAD}$ = 0 $T_A$ = 25°C. Limits with standard typeface are for $T_A$ = 25°C, and limits in **boldface type** apply over the operating temperature range.

| Symbol | Parameter | Conditions | Min (1) | Typ (2) | Max (1) | Units |
|---|---|---|---|---|---|---|
| $V_{REF}$ | Output Voltage Initial Accuracy<br>LM4130-4.096A<br>LM4130-4.096B<br>LM4130-4.096C<br>LM4130-4.096D<br>LM4130-4.096E | | | | <br>±0.05<br>±0.2<br>±0.1<br>±0.4<br>±0.5 | % |
| $TCV_{REF}$/°C (3) | Temperature Coefficient | | | | | ppm/°C |
| | LM4130A, B | 0°C ≤ $T_A$ ≤ +85°C<br>−40°C ≤ $T_A$ ≤ +85°C | | | 10<br>**20** | |
| | LM4130C, D | | | | **20** | |
| | LM4130E | | | | **30** | |
| $\Delta V_{REF}/\Delta V_{IN}$ | Line Regulation | $I_{LOAD}$ = 100µA | | | | ppm/V |
| | | $V_{REF}$ + 500 mV ≤ $V_{IN}$ ≤ 5.5V | | 75 | 250<br>**400** | |
| $\Delta V_{REF}/\Delta I_{LOAD}$ | Load Regulation | 0 mA ≤ $I_{LOAD}$ ≤ 20 mA | | 16 | 60<br>**80** | ppm/mA |
| $\Delta V_{REF}$ | Long-Term Stability (4) | 1000 Hrs | | 50 | | ppm |
| | Thermal Hysteresis (5) | −40°C ≤ $T_A$ ≤ +125°C | | 50 | | |
| $V_{IN}$ - $V_{REF}$ | Dropout Voltage (6) | $I_{LOAD}$ = 10 mA | | | 275<br>**500** | mV |
| $V_N$ | Output Noise Voltage | 0.1 Hz to 10 Hz | | 245 | | $\mu V_{PP}$ |
| $I_S$ | Supply Current | | | 50 | 75<br>**90** | µA |
| $I_{SC}$ | Short Circuit Current | | 30 | | 60 | mA |
| | | | | | **65** | mA |

(1) Limits are 100% production tested at 25°C. Limits over the operating temperature range are ensured through correlation using Statistical Quality Control (SQC) methods. The limits are used to calculate TI's Average Outgoing Quality Level (AOQL).
(2) Typical numbers are at 25°C and represent the most likely parametric norm.
(3) Temperature coefficient is measured by the "Box" method; i.e., the maximum $\Delta V_{REF}$ is divided by the maximum ΔT.
(4) Long term stability is $V_{REF}$ @25°C measured during 1000 hrs.
(5) Thermal hysteresis is defined as the change in +25°C output voltage before and after cycling the device from −40°C to 125°C.
(6) Dropout voltage is defined as the minimum input to output differential at which the output voltage drops by 0.5% below the value measured with a 5V input.

Copyright © 1999–2013, Texas Instruments Incorporated

## LM4130 Typical Performance Characteristics

$T_A$ = 25°C, No Load, $V_{IN}$ = 5.0V, unless otherwise noted.

**Temperature Drift Characteristics**

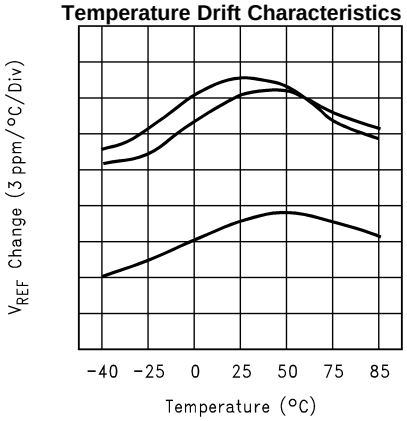


**Load Regulation vs Temperature**

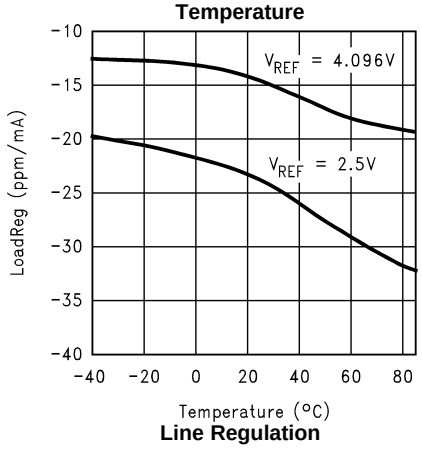


**Line Regulation vs Load**

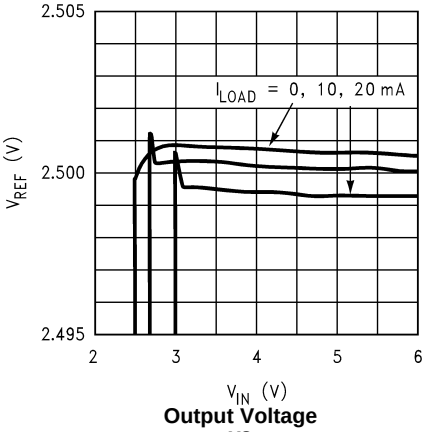


**Line Regulation vs Temperature**

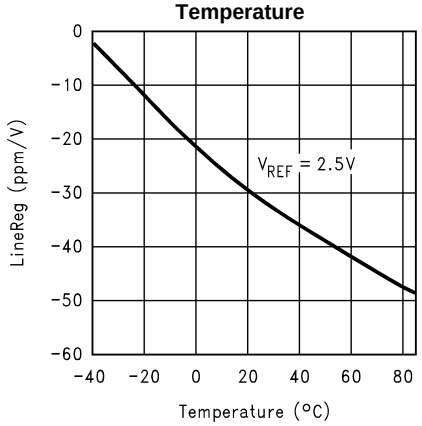


**Output Voltage vs Load Current**

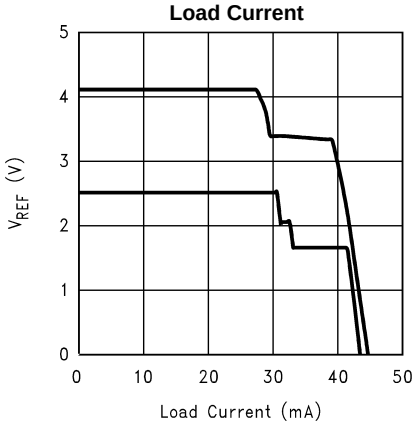


**Dropout vs Load ($V_{REF}$ = 2.5)**

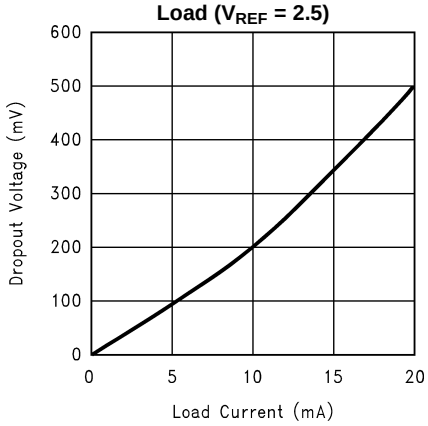



Copyright © 1999–2013, Texas Instruments Incorporated

## LM4130 Typical Performance Characteristics (continued)

$T_A$ = 25°C, No Load, $V_{IN}$ = 5.0V, unless otherwise noted.

**Supply Current vs Temperature**

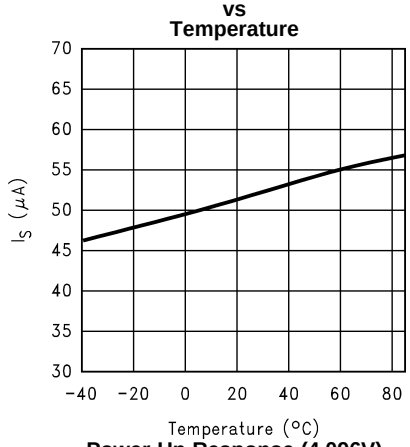


**Short Circuit Current vs Temperature**

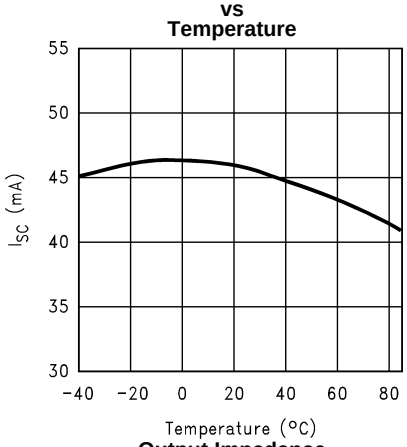


**Power-Up Response (4.096V)**

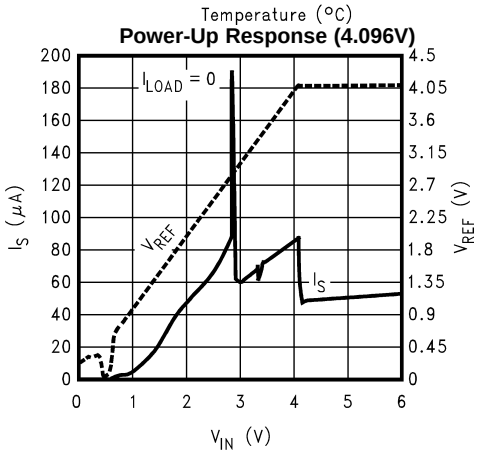


**Output Impedance**

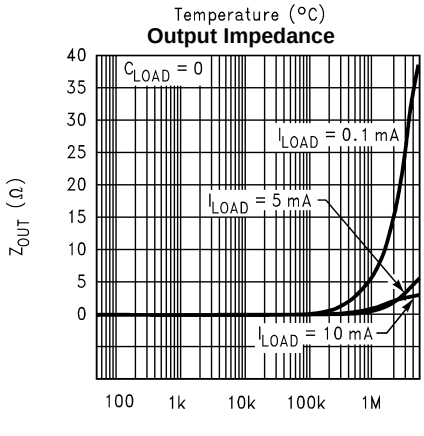


**Power Supply Rejection Ratio**

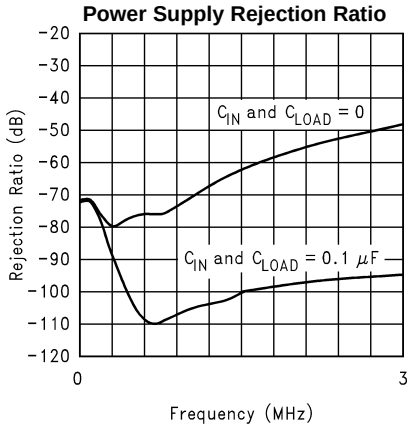


**Load Transient Response**

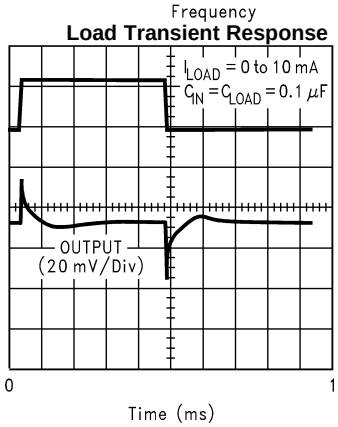

## LM4130 Typical Performance Characteristics (continued)

$T_A$ = 25°C, No Load, $V_{IN}$ = 5.0V, unless otherwise noted.

**Line Transient Response**

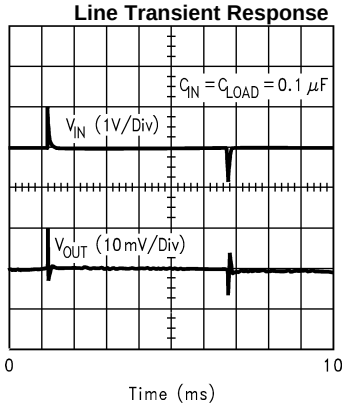


**0.1Hz to 10 Hz Noise ($V_{REF}$ = 2.5V)**

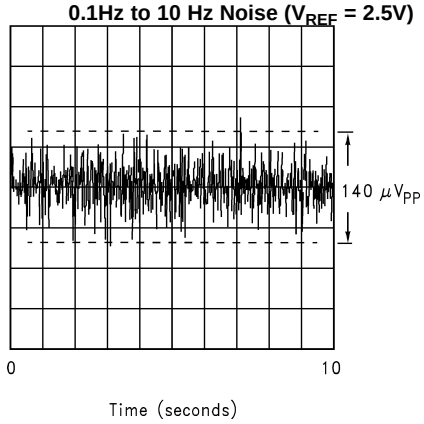


**Output Noise Spectra**

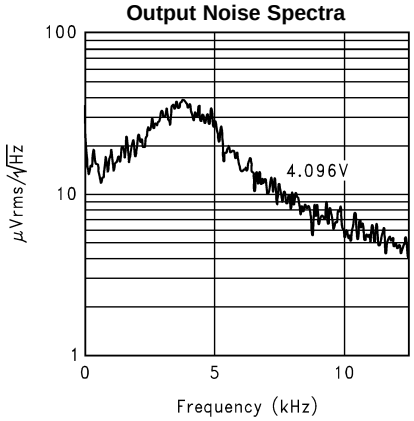


## Pin Functions

**$V_{REF}$ (Pin 5):** Reference Output. The output of the LM4130 can source up to 20 mA. It is stable with output capacitor ranges from 0 to 100 µF.

**$V_{IN}$ (Pin 4):** Positive Supply. Bypassing with a 0.1µF capacitor is recommended if the output loading changes or input is noisy.

**Ground (Pin 2):** Negative Supply or Ground Connection.

**NC (Pins 1, 3):** No Connection (internally terminated). These pins must be left unconnected.

## Application Information

### OUTPUT CAPACITOR

The LM4130 is designed to operate with or without an output capacitor and is stable with capacitive loads of up to 100 µF.

Connecting a capacitor between the output and ground will significantly improve the load transient response when switching from a light load to a heavy load. However, the output capacitor should not be made arbitrarily large because it will effect the turn-on time as well as line and load transients.

### INPUT CAPACITOR

A small 0.1µF capacitor on the input significantly improves stability under a wide range of load conditions. With an input bypass capacitor, the LM4130 will drive any combination of resistance and capacitance up to $V_{REF}$/20mA and 100 µF respectively.

Noise on the power-supply input can effect the output noise, but it can be reduced by using an optional bypass capacitor between the input pin and the ground.


Copyright © 1999–2013, Texas Instruments Incorporated

## PRINTED CIRCUIT BOARD LAYOUT CONSIDERATION

References in SOT packages are generally less prone to assembly stress than devices in Small Outline (SOIC) package.

To minimize the mechanical stress due to PC board mounting that can cause the output voltage to shift from its initial value, mount the reference on a low flex area of the PC board, such as near the edge or a corner.

## Typical Application Circuits

**Figure 2. Precision High Current Low Dropout Regulator**

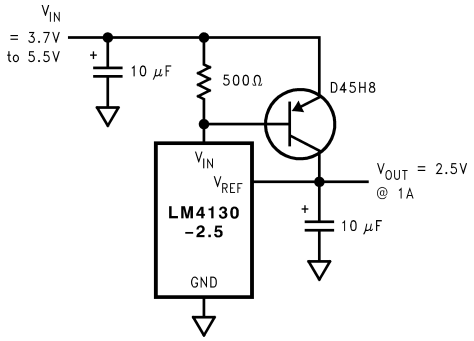


**Figure 3. Voltage Reference with Complimentary Output**

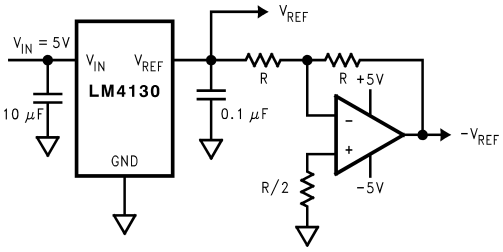


**Figure 4. Precision High Current Low Dropout Regulator**

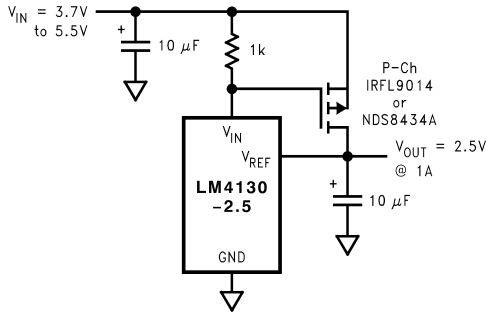


**Figure 5. Precision Voltage Reference with Force and Sense Output**

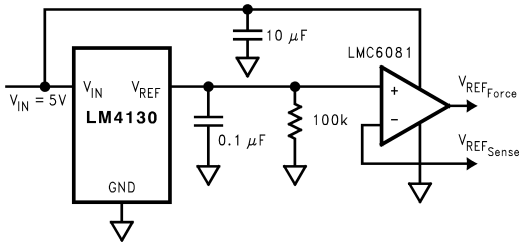

**Figure 6. Programmable Current Source**

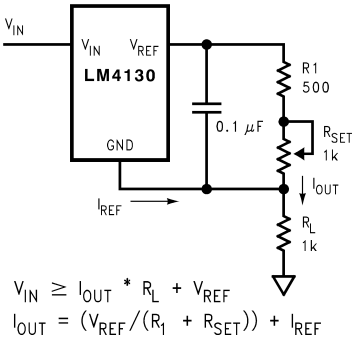


**Figure 7. Precision Regulator with Current Limiting Circuit**

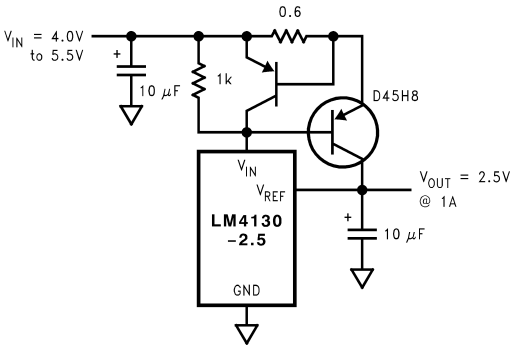


**Figure 8. Low Cost Higher Output Current Circuit**

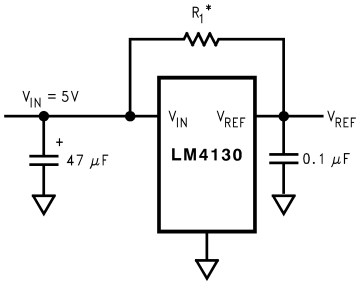


* Select $R_1$ to deliver 80% of typical load current. The LM4130 then will source as necessary, up to 20mA, to maintain the output regulation. Care must be taken not to remove the load as the output will be driven to the rail. This approach will effect line regulation.

**Figure 9. Supply Splitter**

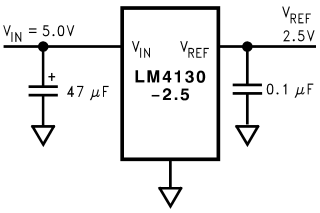



Copyright © 1999–2013, Texas Instruments Incorporated

## REVISION HISTORY

| Changes from Revision C (April 2013) to Revision D | Page |
|---|---|
| • Changed layout of National Data Sheet to TI format | 10 |

## IMPORTANT NOTICE

Texas Instruments Incorporated and its subsidiaries (TI) reserve the right to make corrections, enhancements, improvements and other changes to its semiconductor products and services per JESD46, latest issue, and to discontinue any product or service per JESD48, latest issue. Buyers should obtain the latest relevant information before placing orders and should verify that such information is current and complete. All semiconductor products (also referred to herein as “components”) are sold subject to TI’s terms and conditions of sale supplied at the time of order acknowledgment.

TI warrants performance of its components to the specifications applicable at the time of sale, in accordance with the warranty in TI’s terms and conditions of sale of semiconductor products. Testing and other quality control techniques are used to the extent TI deems necessary to support this warranty. Except where mandated by applicable law, testing of all parameters of each component is not necessarily performed.

TI assumes no liability for applications assistance or the design of Buyers’ products. Buyers are responsible for their products and applications using TI components. To minimize the risks associated with Buyers’ products and applications, Buyers should provide adequate design and operating safeguards.

TI does not warrant or represent that any license, either express or implied, is granted under any patent right, copyright, mask work right, or other intellectual property right relating to any combination, machine, or process in which TI components or services are used. Information published by TI regarding third-party products or services does not constitute a license to use such products or services or a warranty or endorsement thereof. Use of such information may require a license from a third party under the patents or other intellectual property of the third party, or a license from TI under the patents or other intellectual property of TI.

Reproduction of significant portions of TI information in TI data books or data sheets is permissible only if reproduction is without alteration and is accompanied by all associated warranties, conditions, limitations, and notices. TI is not responsible or liable for such altered documentation. Information of third parties may be subject to additional restrictions.

Resale of TI components or services with statements different from or beyond the parameters stated by TI for that component or service voids all express and any implied warranties for the associated TI component or service and is an unfair and deceptive business practice. TI is not responsible or liable for any such statements.

Buyer acknowledges and agrees that it is solely responsible for compliance with all legal, regulatory and safety-related requirements concerning its products, and any use of TI components in its applications, notwithstanding any applications-related information or support that may be provided by TI. Buyer represents and agrees that it has all the necessary expertise to create and implement safeguards which anticipate dangerous consequences of failures, monitor failures and their consequences, lessen the likelihood of failures that might cause harm and take appropriate remedial actions. Buyer will fully indemnify TI and its representatives against any damages arising out of the use of any TI components in safety-critical applications.

In some cases, TI components may be promoted specifically to facilitate safety-related applications. With such components, TI’s goal is to help enable customers to design and create their own end-product solutions that meet applicable functional safety standards and requirements. Nonetheless, such components are subject to these terms.

No TI components are authorized for use in FDA Class III (or similar life-critical medical equipment) unless authorized officers of the parties have executed a special agreement specifically governing such use.

Only those TI components which TI has specifically designated as military grade or “enhanced plastic” are designed and intended for use in military/aerospace applications or environments. Buyer acknowledges and agrees that any military or aerospace use of TI components which have ***not*** been so designated is solely at the Buyer's risk, and that Buyer is solely responsible for compliance with all legal and regulatory requirements in connection with such use.

TI has specifically designated certain components as meeting ISO/TS16949 requirements, mainly for automotive use. In any case of use of non-designated products, TI will not be responsible for any failure to meet ISO/TS16949.

| **Products** | | **Applications** | |
|---|---|---|---|
| Audio | www.ti.com/audio | Automotive and Transportation | www.ti.com/automotive |
| Amplifiers | amplifier.ti.com | Communications and Telecom | www.ti.com/communications |
| Data Converters | dataconverter.ti.com | Computers and Peripherals | www.ti.com/computers |
| DLP® Products | www.dlp.com | Consumer Electronics | www.ti.com/consumer-apps |
| DSP | dsp.ti.com | Energy and Lighting | www.ti.com/energy |
| Clocks and Timers | www.ti.com/clocks | Industrial | www.ti.com/industrial |
| Interface | interface.ti.com | Medical | www.ti.com/medical |
| Logic | logic.ti.com | Security | www.ti.com/security |
| Power Mgmt | power.ti.com | Space, Avionics and Defense | www.ti.com/space-avionics-defense |
| Microcontrollers | microcontroller.ti.com | Video and Imaging | www.ti.com/video |
| RFID | www.ti-rfid.com | | |
| OMAP Applications Processors | www.ti.com/omap | **TI E2E Community** | e2e.ti.com |
| Wireless Connectivity | www.ti.com/wirelessconnectivity | | |

Mailing Address: Texas Instruments, Post Office Box 655303, Dallas, Texas 75265
Copyright © 2013, Texas Instruments Incorporated

## Looking for pricing, stock, or lifecycle information?

Click below to explore more details on WIN SOURCE:

- View LM4130CIM5X-2.5 on WIN SOURCE
- Texas Instruments Information

## Optimize Your Supply Chain with WIN SOURCE Solutions

- Global Sourcing Solution
- Obsolete Management
- Cost Control Management
- Shortage Management
- Alternative Solution
- Excess Inventory Management