THE DATASHEET OF

LM6132AIN

www.win-source.net 0086-755-83957316

LM6132/LM6134 Dual and Quad Low Power 10 MHz Rail-to-Rail I/O Operational Amplifiers

1 Features

- (For 5V Supply, Typ Unless Noted)
- Rail-to-Rail Input CMVR −0.25 V to 5.25 V
- Rail-to-Rail Output Swing 0.01V to 4.99V
- High Gain-Bandwidth, 10 MHz at 20 kHz
- Slew Rate 12 V/µs
- Low Supply Current 360 µA/Amp
- Wide Supply Range 2.7 V to over 24 V
- CMRR 100 dB
- Gain 100 dB with R_L = 10 k
- PSRR 82 dB

2 Applications

- Battery Operated Instrumentation
- Instrumentation Amplifiers
- Portable Scanners
- Wireless Communications
- Flat Panel Display Driver

3 Description

The LM6132/34 provides new levels of speed vs. power performance in applications where low voltage supplies or power limitations previously made compromise necessary. With only 360 µA/amp supply current, the 10 MHz gain-bandwidth of this device supports new portable applications where higher power devices unacceptably drain battery life.

The LM6132/34 can be driven by voltages that exceed both power supply rails, thus eliminating concerns over exceeding the common-mode voltage range. The rail-to-rail output swing capability provides the maximum possible dynamic range at the output. This is particularly important when operating on low supply voltages. The LM6132/34 can also drive large capacitive loads without oscillating.

Operating on supplies from 2.7 V to over 24 V, the LM6132/34 is excellent for a very wide range of applications, from battery operated systems with large bandwidth requirements to high speed instrumentation.

Device Information(1)

PART NUMBER	PACKAGE	BODY SIZE (NOM)
LM6132	SOIC (8)	4.90 mm x 3.91 mm
LM6132	PDIP (8)	9.81 mm x 6.35 mm
LM6134	SOIC (14)	8.65 mm x 3.91 mm
LM6134	PDIP (14)	19.177 mm x 6.35 mm

(1) For all available packages, see the orderable addendum at the end of the datasheet.

Supply Current vs. Supply Voltage

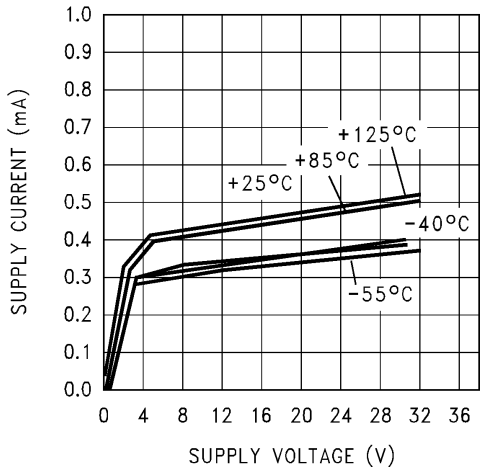

Offset Voltage vs. Supply Voltage

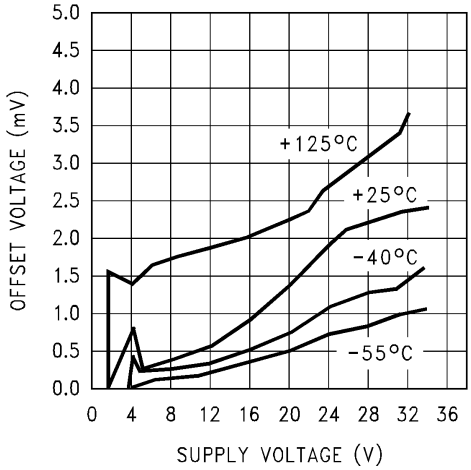

An IMPORTANT NOTICE at the end of this data sheet addresses availability, warranty, changes, use in safety-critical applications, intellectual property matters and other important disclaimers. PRODUCTION DATA.

Table of Contents

1 **Features** ... 1
2 **Applications** ... 1
3 **Description** ... 1
4 **Revision History** ... 2
5 **Pin Configuration and Functions** ... 3
6 **Specifications** ... 4
6.1 Absolute Maximum Ratings ... 4
6.2 Handling Ratings ... 4
6.3 Recommended Operating Conditions(1) ... 4
6.4 Thermal Information, 8-Pin ... 4
6.5 Thermal Information, 14-Pin ... 4
6.6 5.0V DC Electrical Characteristics ... 5
6.7 5.0V AC Electrical Characteristics ... 6
6.8 2.7V DC Electrical Characteristics ... 6
6.9 2.7V AC Electrical Characteristics ... 6
6.10 24V DC Electrical Characteristics ... 7
6.11 24V AC Electrical Characteristics ... 7
6.12 Typical Performance Characteristics ... 8
7 **Application and Implementation** ... 13
7.1 Application Information ... 13
7.2 Enhanced Slew Rate ... 13
7.3 Typical Applications ... 17
8 **Device and Documentation Support** ... 18
8.1 Related Links ... 18
8.2 Trademarks ... 18
8.3 Electrostatic Discharge Caution ... 18
8.4 Glossary ... 18
9 **Mechanical, Packaging, and Orderable Information** ... 18

4 Revision History

NOTE: Page numbers for previous revisions may differ from page numbers in the current version.

Changes from Revision D (February 2013) to Revision E	Page
• Changed "Junction Temperature Range" to "Operating Temperature Range" and deleted "T_J".	4
• Deleted T_J = 25°C for Electrical Characteristics tables.	5

Changes from Revision C (February 2013) to Revision D	Page
• Changed layout of National Data Sheet to TI format	17

Copyright © 2000–2014, Texas Instruments Incorporated

5 Pin Configuration and Functions

8-Pin SOIC/PDIP Packages D and P Top View

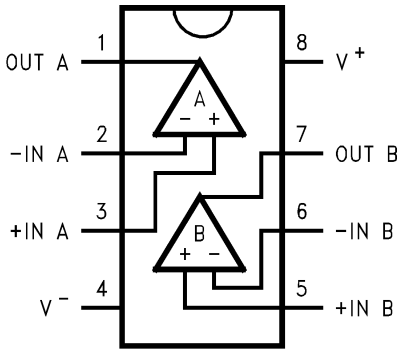

14-Pin SOIC/PDIP Packages D and NFF Top View

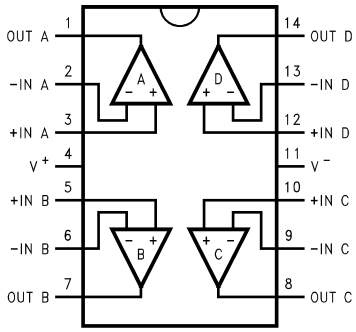

Pin Functions

PIN			I/O	DESCRIPTION
NAME	LM6132	LM6134		
	D/P	D/NFF0014 A		
-IN A	2	2	I	ChA Inverting Input
+IN A	3	3	I	ChA Non-inverting Input
-IN B	6	6	I	ChB Inverting Input
+IN B	5	5	I	ChB Non-inverting Input
-IN C		9	I	ChC Inverting Input
+IN C		10	I	ChC Non-inverting Input
-IN D		13	I	ChD Inverting Input
+IN D		12	I	ChD Non-inverting Input
OUT A	1	1	O	ChA Output
OUT B	7	7	O	ChB Output
OUT C		8	O	ChC Output
OUT D		14	O	ChD Output
V^-	4	11	I	Negative Supply
V^+	8	4	I	Positive Supply

Copyright © 2000–2014, Texas Instruments Incorporated

6 Specifications

6.1 Absolute Maximum Ratings[1][2]

over operating free-air temperature range (unless otherwise noted)

	MIN	MAX	UNIT
Differential Input Voltage		±15	V
Voltage at Input/Output Pin		$(V^+)+0.3$ $(V^-)-0.3$	V
Supply Voltage ($V^+–V^-$)		35	V
Current at Input Pin		±10	mA
Current at Output Pin[3]		±25	mA
Current at Power Supply Pin		50	mA
Lead Temp. (soldering, 10 sec.)		260	°C
Junction Temperature[4]		150	°C

(1) Absolute Maximum Ratings indicate limits beyond which damage to the device may occur. Operating Ratings indicate conditions for which the device is intended to be functional, but specific performance is not guaranteed. For guaranteed specifications and the test conditions, see the Electrical characteristics.
(2) If Military/Aerospace specified devices are required, please contact the Texas Instruments Sales Office/Distributors for availability and specifications.
(3) Applies to both single-supply and split-supply operation. Continuous short circuit operation at elevated ambient temperature can result in exceeding the maximum allowed junction temperature of 150°C.
(4) The maximum power dissipation is a function of $T_{J(MAX)}$, $R_{\theta JA}$, and T_A. The maximum allowable power dissipation at any ambient temperature is $P_D = (T_{J(MAX)} - T_A)/R_{\theta JA}$. All numbers apply for packages soldered directly into a PC board.

6.2 Handling Ratings

			MIN	MAX	UNIT
T_{stg}	Storage temperature range		−65	+150	°C
$V_{(ESD)}$	Electrostatic discharge	Human body model (HBM), per ANSI/ESDA/JEDEC JS-001, all pins[1]		2500	V

(1) Human Body Model, 1.5 kΩ in series with 100 pF .JEDEC document JEP155 states that 2500-V HBM allows safe manufacturing with a standard ESD control process.

6.3 Recommended Operating Conditions[1]

over operating free-air temperature range (unless otherwise noted)

	MIN	MAX	UNIT
Supply Voltage		$1.8 \le V^+ \le 24$	V
Operating Temperature Range: LM6132, LM6134	−40	+85	°C

(1) Absolute Maximum Ratings indicate limits beyond which damage to the device may occur. Operating Ratings indicate conditions for which the device is intended to be functional, but specific performance is not guaranteed. For guaranteed specifications and the test conditions, see the Electrical characteristics.

6.4 Thermal Information, 8-Pin

THERMAL METRIC[1]		D (SOIC)	P (PDIP)	UNIT
		8 PINS	8 PINS	
$R_{\theta JA}$	Junction-to-ambient thermal resistance	193	115	°C/W

(1) For more information about traditional and new thermal metrics, see the *IC Package Thermal Metrics* application report, SPRA953.

6.5 Thermal Information, 14-Pin

THERMAL METRIC[1]		D (SOIC)	NFF (PDIP)	UNIT
		14 PINS	14 PINS	
$R_{\theta JA}$	Junction-to-ambient thermal resistance	126	81	°C/W

(1) For more information about traditional and new thermal metrics, see the *IC Package Thermal Metrics* application report, SPRA953.

Copyright © 2000–2014, Texas Instruments Incorporated

6.6 5.0V DC Electrical Characteristics

Unless otherwise specified, all limits guaranteed for V^+ = 5.0V, V^- = 0V, V_{CM} = V_O = $V^+/2$ and R_L > 1 MΩ to $V^+/2$. **Boldface** limits apply at the temperature extremes

PARAMETER		TEST CONDITIONS	TYP (1)	LM6134AI LM6132AI LIMIT (2)	LM6134BI LM6132BI LIMIT (2)	UNIT
V_{OS}	Input Offset Voltage		0.25	2 **4**	6 **8**	mV max
TCV_{OS}	Input Offset Voltage Average Drift		**5**			μV/C
I_B	Input Bias Current	0V ≤ V_{CM} ≤ 5V	110	140 **300**	180 **350**	nA max
I_{OS}	Input Offset Current		3.4	30 **50**	30 **50**	nA max
R_{IN}	Input Resistance, CM		104			MΩ
CMRR	Common Mode Rejection Ratio	0V ≤ V_{CM} ≤ 4V	100	75 **70**	75 **70**	dB min
		0V ≤ V_{CM} ≤ 5V	80	60 **55**	60 **55**	
PSRR	Power Supply Rejection Ratio	±2.5V ≤ V^+ ≤ ±12V	82	78 **75**	78 **75**	dB min
V_{CM}	Input Common-Mode Voltage Range		−0.25 5.25	**0** **5.0**	**0** **5.0**	V
A_V	Large Signal Voltage Gain	R_L = 10k	100	25 **8**	15 **6**	V/mV min
V_O	Output Swing	100k Load	4.992	4.98 **4.93**	4.98 **4.93**	V min
			0.007	0.017 **0.019**	0.017 **0.019**	V max
		10k Load	4.952	4.94 **4.85**	4.94 **4.85**	V min
			0.032	0.07 **0.09**	0.07 **0.09**	V max
		5k Load	4.923	4.90 **4.85**	4.90 **4.85**	V min
			0.051	0.095 **0.12**	0.095 **0.12**	V max
I_{SC}	Output Short Circuit Current LM6132	Sourcing	4	2 **2**	2 **1**	mA min
		Sinking	3.5	1.8 **1.8**	1.8 **1**	mA min
I_{SC}	Output Short Circuit Current LM6134	Sourcing	3	2 **1.6**	2 **1**	mA min
		Sinking	3.5	1.8 **1.3**	1.8 **1**	mA min
I_S	Supply Current	Per Amplifier	360	400 **450**	400 **450**	μA max

(1) Typical Values represent the most likely parametric normal.
(2) All limits are guaranteed by testing or statistical analysis.

Copyright © 2000–2014, Texas Instruments Incorporated

6.7 5.0V AC Electrical Characteristics

Unless otherwise specified, all limits guaranteed for V^+ = 5.0V, V^- = 0V, V_{CM} = V_O = $V^+/2$ and R_L > 1 MΩ to $V^+/2$. **Boldface** limits apply at the temperature extremes

PARAMETER		TEST CONDITIONS	TYP (1)	LM6134AI LM6132AI LIMIT (2)	LM6134BI LM6132BI LIMIT (2)	UNIT
SR	Slew Rate	±4V @ V_S = ±6V R_S < 1 kΩ	14	8 **7**	8 **7**	V/µs min
GBW	Gain-Bandwidth Product	f = 20 kHz	10	7.4 **7**	7.4 **7**	MHz min
θm	Phase Margin	R_L = 10k	33			deg
G_m	Gain Margin	R_L = 10k	10			dB
e_n	Input Referred Voltage Noise	f = 1 kHz	27			nV/√Hz
i_n	Input Referred Current Noise	f = 1 kHz	0.18			pA/√Hz

(1) Typical Values represent the most likely parametric normal.
(2) All limits are guaranteed by testing or statistical analysis.

6.8 2.7V DC Electrical Characteristics

Unless otherwise specified, all limits guaranteed for V^+ = 2.7V, V^- = 0V, V_{CM} = V_O = $V^+/2$ and R_L > 1 MΩ to $V^+/2$. **Boldface** limits apply at the temperature extreme

PARAMETER		TEST CONDITIONS	TYP (1)	LM6134AI LM6132AI LIMIT (2)	LM6134BI LM6132BI LIMIT (2)	UNIT
V_{OS}	Input Offset Voltage		0.12	2 **8**	6 **12**	mV max
I_B	Input Bias Current	0V ≤ V_{CM} ≤ 2.7V	90			nA
I_{OS}	Input Offset Current		2.8			nA
R_{IN}	Input Resistance		134			MΩ
CMRR	Common Mode Rejection Ratio	0V ≤ V_{CM} ≤ 2.7V	82			dB
PSRR	Power Supply Rejection Ratio	±1.35V ≤ V^+ ≤ ±12V	80			dB
V_{CM}	Input Common-Mode Voltage Range			2.7 0	2.7 0	V
A_V	Large Signal Voltage Gain	R_L = 10k	100			V/mV
V_O	Output Swing	R_L = 100k	0.03	0.08 **0.112**	0.08 **0.112**	V max
			2.66	2.65 **2.25**	2.65 **2.25**	V min
I_S	Supply Current	Per Amplifier	330			µA

(1) Typical Values represent the most likely parametric normal.
(2) All limits are guaranteed by testing or statistical analysis.

6.9 2.7V AC Electrical Characteristics

Unless otherwise specified, all limits guaranteed for V^+ = 2.7V, V^- = 0V, V_{CM} = V_O = $V^+/2$ and R_L > 1 MΩ to $V^+/2$.

PARAMETER		TEST CONDITIONS	TYP (1)	LM6134AI LM6132AI LIMIT (2)	LM6134BI LM6132BI LIMIT (2)	UNIT
GBW	Gain-Bandwidth Product	R_L = 10k, f = 20 kHz	7			MHz
θ_m	Phase Margin	R_L = 10k	23			deg
G_m	Gain Margin		12			dB

(1) Typical Values represent the most likely parametric normal.
(2) All limits are guaranteed by testing or statistical analysis.

Copyright © 2000–2014, Texas Instruments Incorporated

6.10 24V DC Electrical Characteristics

Unless otherwise specified, all limits guaranteed for V^+ = 24V, V^- = 0V, V_{CM} = V_O = $V^+/2$ and R_L > 1 MΩ to $V^+/2$. **Boldface** limits apply at the temperature extreme

PARAMETER		TEST CONDITIONS	TYP (1)	LM6134AI LM6132AI LIMIT (2)	LM6134BI LM6132BI LIMIT (2)	UNIT
V_{OS}	Input Offset Voltage		1.7	3 **5**	7 **9**	mV max
I_B	Input Bias Current	0V ≤ V_{CM} ≤ 24V	125			nA
I_{OS}	Input Offset Current		4.8			nA
R_{IN}	Input Resistance		210			MΩ
CMRR	Common Mode Rejection Ratio	0V ≤ V_{CM} ≤ 24V	80			dB
PSRR	Power Supply Rejection Ratio	2.7V ≤ V^+ ≤ 24V	82			dB
V_{CM}	Input Common-Mode Voltage Range		−0.25 24.25	0 24	0 24	V min V max
A_V	Large Signal Voltage Gain	R_L = 10k	102			V/mV
V_O	Output Swing	R_L = 10k	0.075 23.86	0.15 23.8	0.15 23.8	V max V min
I_S	Supply Current	Per Amplifier	390	450 **490**	450 **490**	µA max

(1) Typical Values represent the most likely parametric normal.
(2) All limits are guaranteed by testing or statistical analysis.

6.11 24V AC Electrical Characteristics

Unless otherwise specified, all limits guaranteed for V^+ = 24V, V^- = 0V, V_{CM} = V_O = $V^+/2$ and R_L > 1 MΩ to $V^+/2$.

PARAMETER		TEST CONDITIONS	TYP (1)	LM6134AI LM6132AI LIMIT (2)	LM6134BI LM6132BI LIMIT (2)	UNIT
GBW	Gain-Bandwidth Product	R_L = 10k, f = 20 kHz	11			MHz
θ_m	Phase Margin	R_L = 10k	23			deg
G_m	Gain Margin	R_L = 10k	12			dB
THD + N	Total Harmonic Distortion and Noise	A_V = +1, V_O = $20V_{P-P}$ f = 10 kHz	0.0015%			

(1) Typical Values represent the most likely parametric normal.
(2) All limits are guaranteed by testing or statistical analysis.

6.12 Typical Performance Characteristics

T_A = 25°C, R_L = 10 kΩ unless otherwise specified

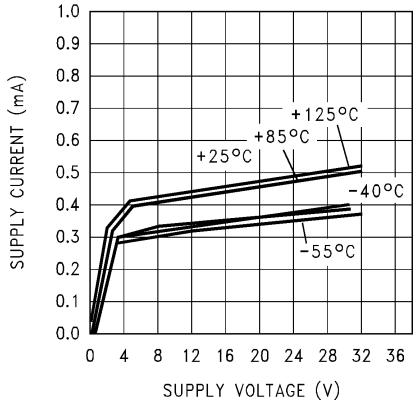

Figure 1. Supply Current vs. Supply Voltage

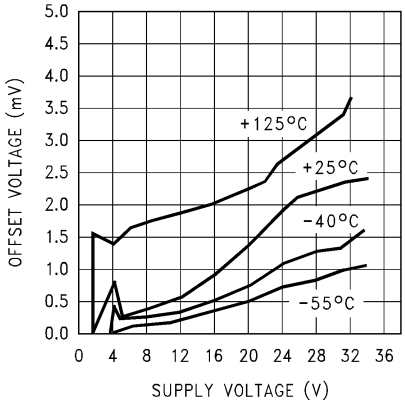

Figure 2. Offset Voltage vs. Supply Voltage

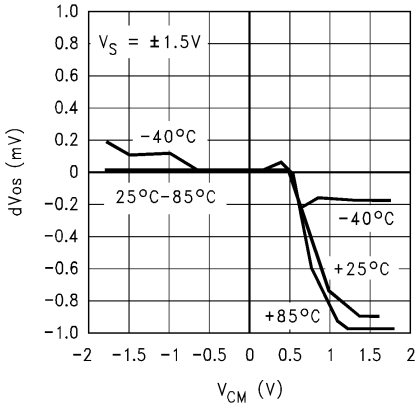

Figure 3. dV_{OS} vs. V_{CM}

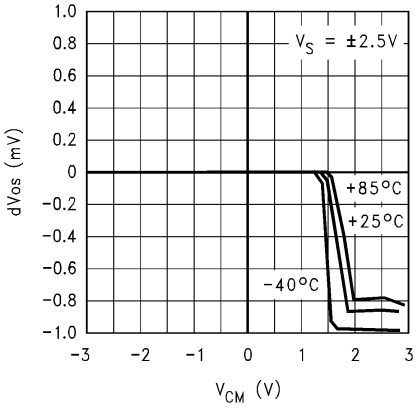

Figure 4. dV_{OS} vs. V_{CM}

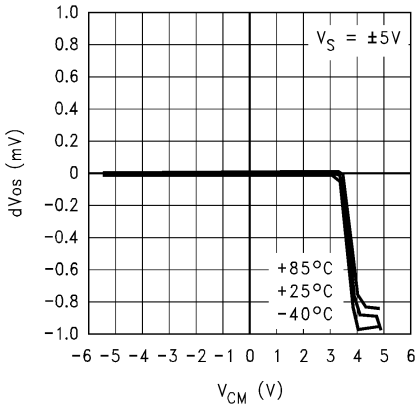

Figure 5. dV_{OS} vs. V_{CM}

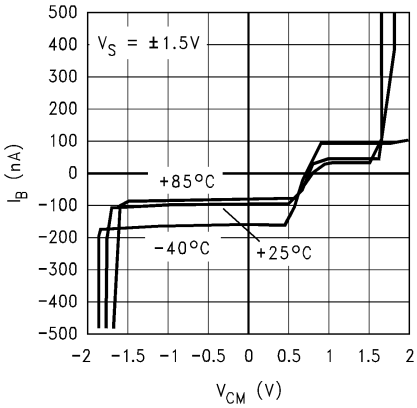

Figure 6. I_{BIAS} vs. V_{CM}

Copyright © 2000–2014, Texas Instruments Incorporated

Typical Performance Characteristics (continued)

T_A = 25°C, R_L = 10 kΩ unless otherwise specified

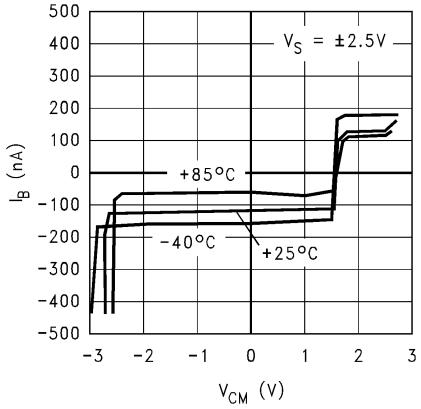

Figure 7. I_{BIAS} vs. V_{CM}

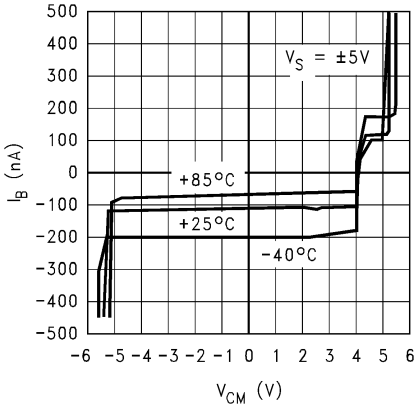

Figure 8. I_{BIAS} vs. V_{CM}

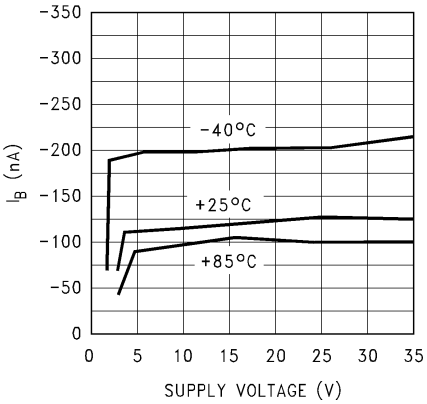

Figure 9. Input Bias Current vs. Supply Voltage

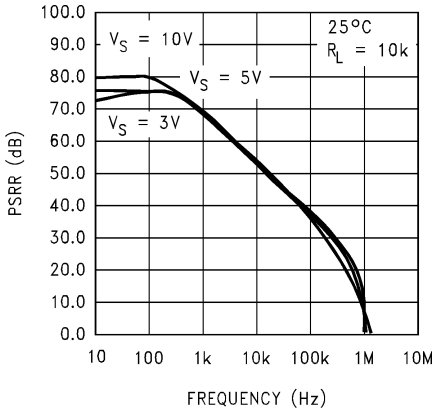

Figure 10. Negative PSRR vs. Frequency

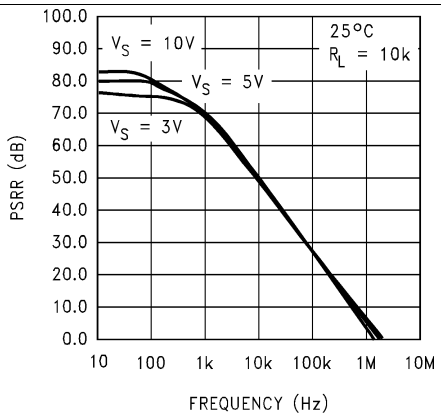

Figure 11. Positive PSSR vs. Frequency

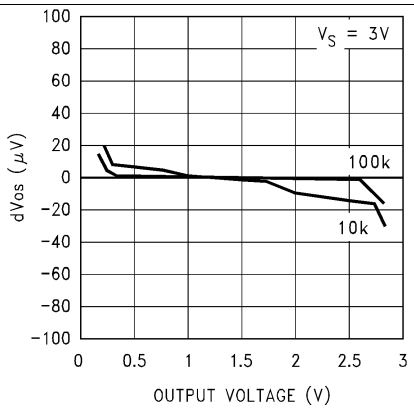

Figure 12. dV_{OS} vs. Output Voltage

Typical Performance Characteristics (continued)

T_A = 25°C, R_L = 10 kΩ unless otherwise specified

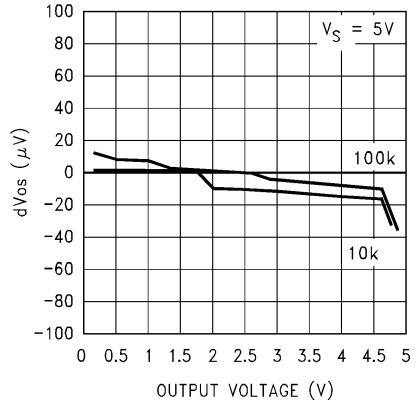

Figure 13. dV_{OS} vs. Output Voltage

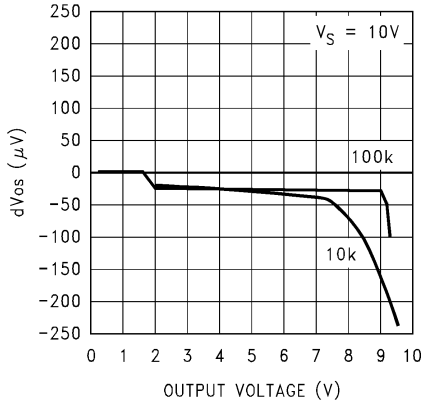

Figure 14. dV_{OS} vs. Output Voltage

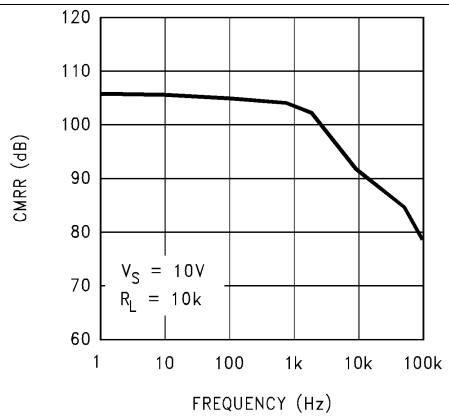

Figure 15. CMRR vs. Frequency

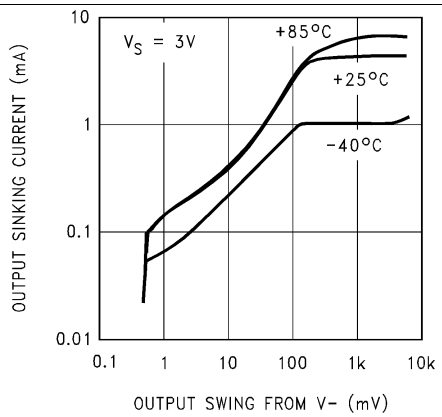

Figure 16. Output Voltage vs. Sinking Current

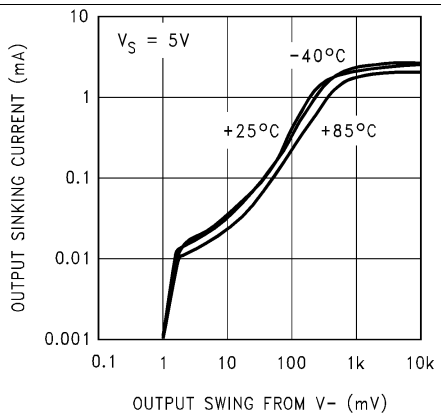

Figure 17. Output Voltage vs. Sinking Current

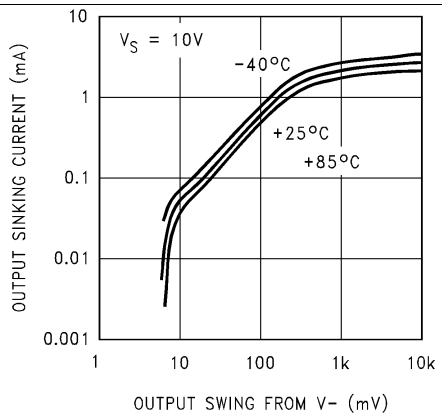

Figure 18. Output Voltage vs. Sinking Current

Copyright © 2000–2014, Texas Instruments Incorporated

Typical Performance Characteristics (continued)

T_A = 25°C, R_L = 10 kΩ unless otherwise specified

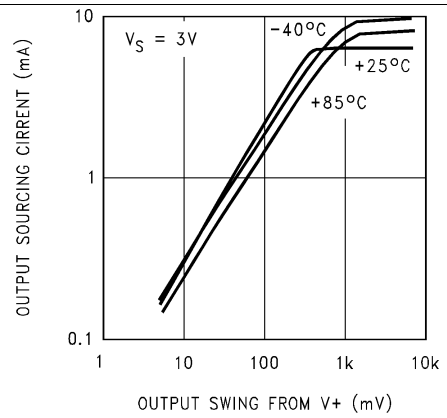

Figure 19. Output Voltage vs. Sourcing Current

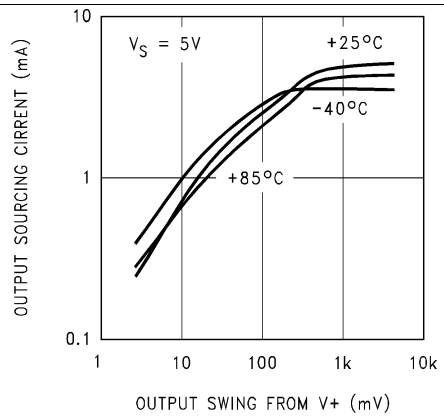

Figure 20. Output Voltage vs. Sourcing Current

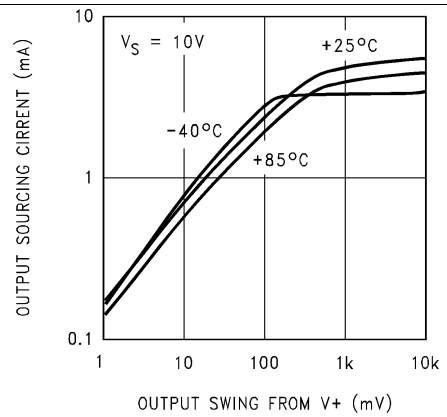

Figure 21. Output Voltage vs. Sourcing Current

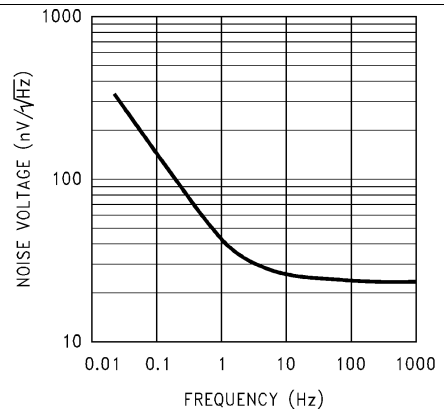

Figure 22. Noise Voltage vs. Frequency

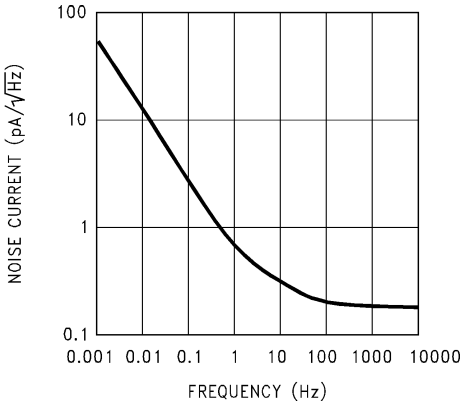

Figure 23. Noise Current vs. Frequency

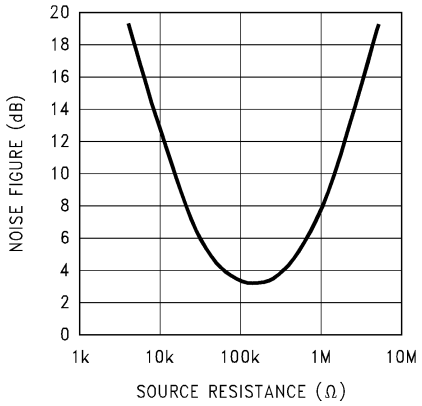

Figure 24. NF vs. Source Resistance

Typical Performance Characteristics (continued)

T_A = 25°C, R_L = 10 kΩ unless otherwise specified

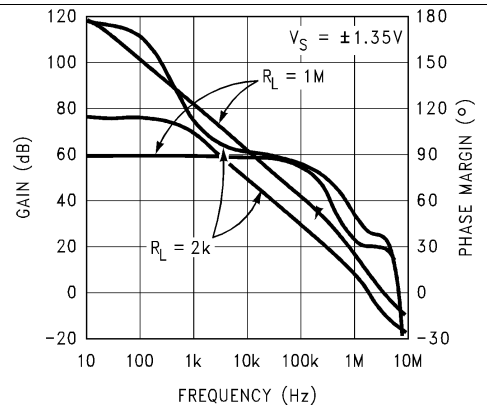

Figure 25. Gain and Phase vs. Frequency

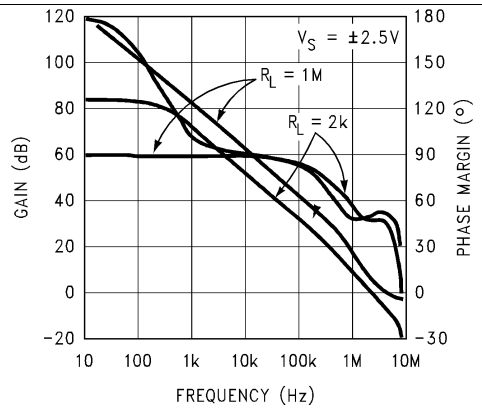

Figure 26. Gain and Phase vs. Frequency

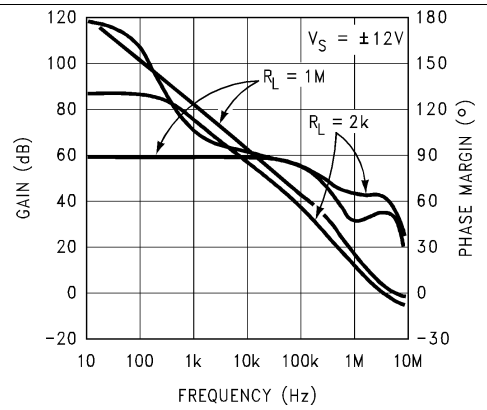

Figure 27. Gain and Phase vs. Frequency

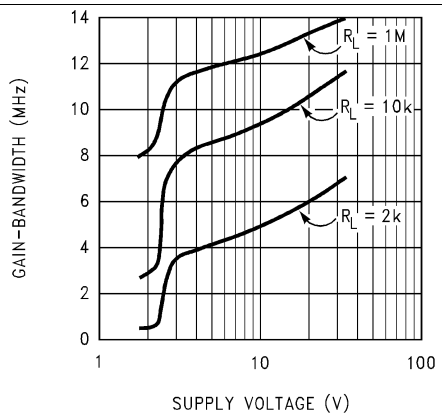

Figure 28. GBW vs. Supply Voltage at 20 kHz

Copyright © 2000–2014, Texas Instruments Incorporated

7 Application and Implementation

7.1 Application Information

The LM6132 brings a new level of ease of use to op amp system design. Greater than rail-to-rail input voltage eliminates concern over exceeding the common-mode voltage range.

Rail-to-rail output swing provides the maximum possible dynamic range at the output. This is particularly important when operating on low supply voltages.

The high gain-bandwidth with low supply current opens new battery powered applications, where high power consumption previously reduced battery life to unacceptable levels.

To take advantage of these features, some ideas should be kept in mind, which are outlined in subsequent sections.

7.2 Enhanced Slew Rate

Unlike most bipolar op amps, the unique phase reversal prevention/speed-up circuit in the input stage eliminates phase reversal and allows the slew rate to be a function of the input signal amplitude.

Figure 30 shows how excess input signal is routed around the input collector-base junctions directly to the current mirrors.

The LM6132/34 input stage converts the input voltage change to a current change. This current change drives the current mirrors through the collectors of Q1–Q2, Q3–Q4 when the input levels are normal.

If the input signal exceeds the slew rate of the input stage and the differential input voltage rises above a diode drop, the excess signal bypasses the normal input transistors, (Q1–Q4), and is routed in correct phase through the two additional transistors, (Q5, Q6), directly into the current mirrors.

The rerouting of excess signal allows the slew-rate to increase by a factor of 10 to 1 or more. (See Figure 29).

As the overdrive increases, the op amp reacts better than a conventional op amp. Large fast pulses will raise the slew rate to around 25V to 30 V/µs.

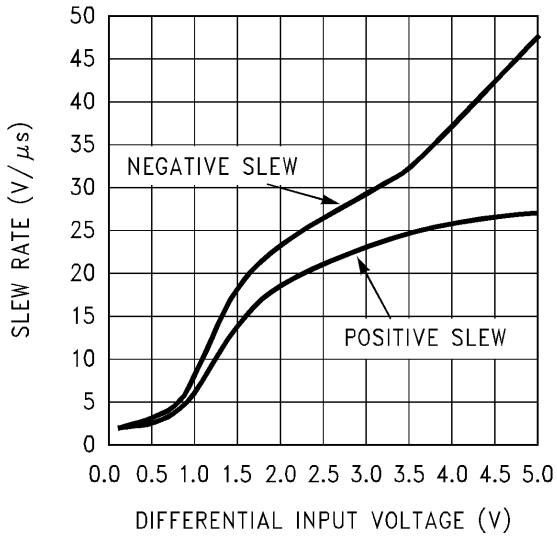

Figure 29. Slew Rate vs. Differential V_{IN}
V_S = ±12V

This effect is most noticeable at higher supply voltages and lower gains where incoming signals are likely to be large.

This speed-up action adds stability to the system when driving large capacitive loads.

Enhanced Slew Rate (continued)

7.2.1 Driving Capacitive Loads

Capacitive loads decrease the phase margin of all op amps. This is caused by the output resistance of the amplifier and the load capacitance forming an R-C phase lag network. This can lead to overshoot, ringing and oscillation. Slew rate limiting can also cause additional lag. Most op amps with a fixed maximum slew-rate will lag further and further behind when driving capacitive loads even though the differential input voltage raises. With the LM6132, the lag causes the slew rate to raise. The increased slew-rate keeps the output following the input much better. This effectively reduces phase lag. After the output has caught up with the input, the differential input voltage drops down and the amplifier settles rapidly.

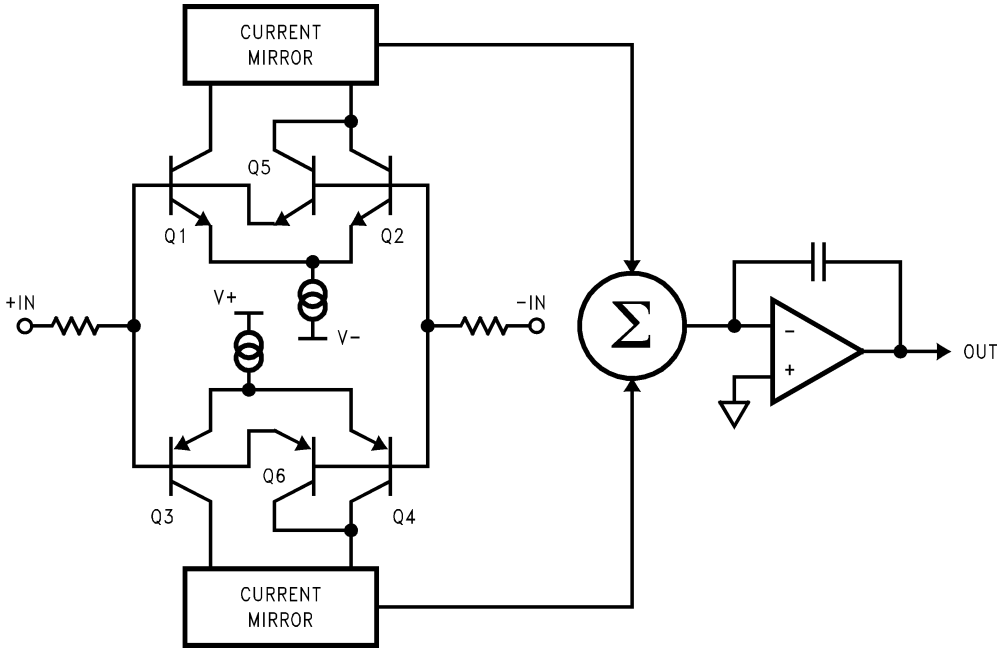

Figure 30. Internal Block Diagram

Copyright © 2000–2014, Texas Instruments Incorporated

Enhanced Slew Rate (continued)

These features allow the LM6132 to drive capacitive loads as large as 500 pF at unity gain and not oscillate. The scope photos (Figure 31 and Figure 32) show the LM6132 driving a 500 pF load. In Figure 31 , the lower trace is with no capacitive load and the upper trace is with a 500 pF load. Here we are operating on ±12V supplies with a 20 V_{PP} pulse. Excellent response is obtained with a C_f of 39 pF. In Figure 32, the supplies have been reduced to ±2.5V, the pulse is 4 V^{PP} and C_F is 39 pF. The best value for the compensation capacitor should be established after the board layout is finished because the value is dependent on board stray capacity, the value of the feedback resistor, the closed loop gain and, to some extent, the supply voltage.

Another effect that is common to all op amps is the phase shift caused by the feedback resistor and the input capacitance. This phase shift also reduces phase margin. This effect is taken care of at the same time as the effect of the capacitive load when the capacitor is placed across the feedback resistor.

The circuit shown in Figure 33 was used for Figure 31 and Figure 32.

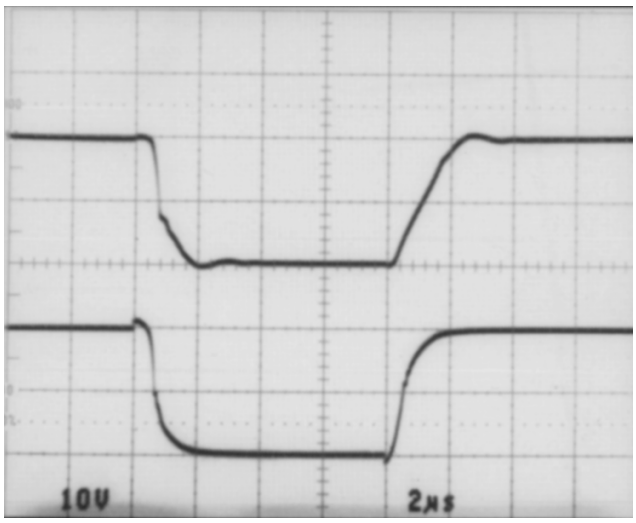

Figure 31. Twenty-Volt Step Response:
with Cap Load (Top Trace)
without Cap Load (Bottom Trace)

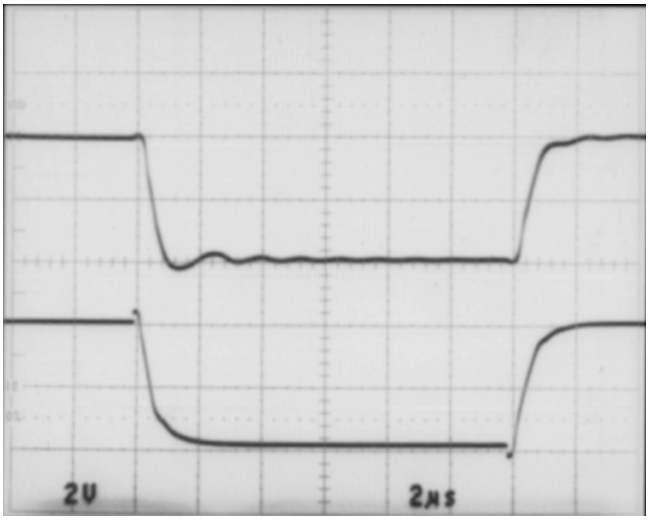

Figure 32. Four-Volt Step Response:
with Cap Load (Top Trace)
without Cap Load (Bottom Trace)

Enhanced Slew Rate (continued)

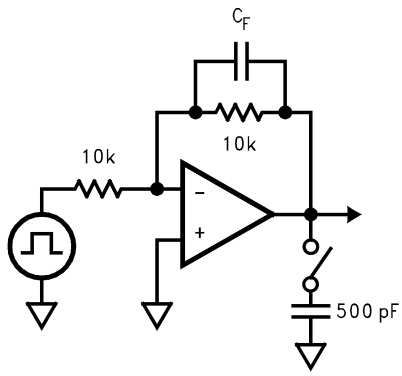

Figure 33. Cap Load Test Circuit

Figure 34 shows a method for compensating for load capacitance (C_O) effects by adding both an isolation resistor R_O at the output and a feedback capacitor $C_F$directly between the output and the inverting input pin. Feedback capacitor C_F compensates for the pole introduced by R_O and C_O, minimizing ringing in the output waveform while the feedback resistor R_F compensates for dc inaccuracies introduced by R_O. Depending on the size of the load capacitance, the value of $R_O$is typically chosen to be between 100 Ω to 1 kΩ.

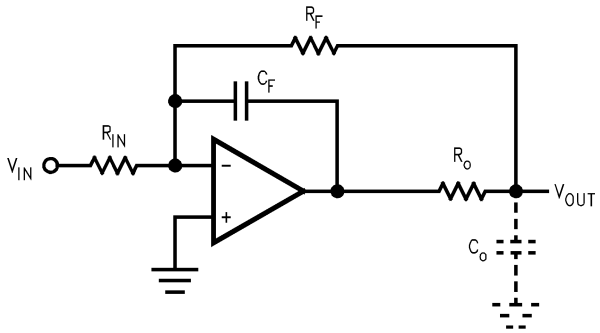

Figure 34. Capacitive Loading Compensation Technique

Copyright © 2000–2014, Texas Instruments Incorporated

7.3 Typical Applications

7.3.1 Three Op Amp Instrumentation Amp with Rail-to-Rail Input and Output

Using the LM6134, a 3 op amp instrumentation amplifier with rail-to-rail inputs and rail to rail output can be made. These features make these instrumentation amplifiers ideal for single supply systems.

Some manufacturers use a precision voltage divider array of 5 resistors to divide the common-mode voltage to get an input range of rail-to-rail or greater. The problem with this method is that it also divides the signal, so to even get unity gain, the amplifier must be run at high closed loop gains. This raises the noise and drift by the internal gain factor and lowers the input impedance. Any mismatch in these precision resistors reduces the CMR as well. Using the LM6134, all of these problems are eliminated.

In this example, amplifiers A and B act as buffers to the differential stage (Figure 35). These buffers assure that the input impedance is over 100 MΩ and they eliminate the requirement for precision matched resistors in the input stage. They also assure that the difference amp is driven from a voltage source. This is necessary to maintain the CMR set by the matching of R1–R2 with R3–R4.

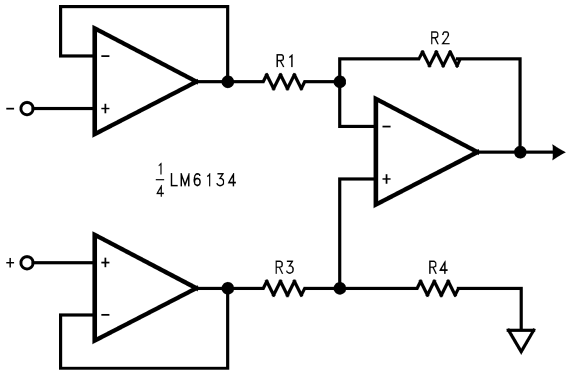

Figure 35. Instrumentation Amplifier

7.3.2 Flat Panel Display Buffering

Three features of the LM6132/34 make it a superb choice for TFT LCD applications. First, its low current draw (360 µA per amplifier at 5 V) makes it an ideal choice for battery powered applications such as in laptop computers. Second, since the device operates down to 2.7 V, it is a natural choice for next generation 3V TFT panels. Last, but not least, the large capacitive drive capability of the LM6132 comes in very handy in driving highly capacitive loads that are characteristic of LCD display drivers.

The large capacitive drive capability of the LM6132/34 allows it to be used as buffers for the gamma correction reference voltage inputs of resistor-DAC type column (Source) drivers in TFT LCD panels. This amplifier is also useful for buffering only the center reference voltage input of Capacitor-DAC type column (Source) drivers such as the LMC750X series.

Since for VGA and SVGA displays, the buffered voltages must settle within approximately 4 µs, the well known technique of using a small isolation resistor in series with the amplifier's output very effectively dampens the ringing at the output.

With its wide supply voltage range of 2.7 V to 24 V, the LM6132/34 can be used for a diverse range of applications. The system designer is thus able to choose a single device type that serves many sub-circuits in the system, eliminating the need to specify multiple devices in the bill of materials. Along with its sister parts, the LM6142 and LM6152 that have the same wide supply voltage capability, choice of the LM6132 in a design eliminates the need to search for multiple sources for new designs.

Copyright © 2000–2014, Texas Instruments Incorporated

8 Device and Documentation Support

8.1 Related Links

The table below lists quick access links. Categories include technical documents, support and community resources, tools and software, and quick access to sample or buy.

Table 1. Related Links

PARTS	PRODUCT FOLDER	SAMPLE & BUY	TECHNICAL DOCUMENTS	TOOLS & SOFTWARE	SUPPORT & COMMUNITY
LM6132	Click here	Click here	Click here	Click here	Click here
LM6134	Click here	Click here	Click here	Click here	Click here

8.2 Trademarks

All trademarks are the property of their respective owners.

8.3 Electrostatic Discharge Caution

These devices have limited built-in ESD protection. The leads should be shorted together or the device placed in conductive foam during storage or handling to prevent electrostatic damage to the MOS gates.

8.4 Glossary

SLYZ022 — *TI Glossary*.

This glossary lists and explains terms, acronyms, and definitions.

9 Mechanical, Packaging, and Orderable Information

The following pages include mechanical, packaging, and orderable information. This information is the most current data available for the designated devices. This data is subject to change without notice and revision of this document. For browser-based versions of this data sheet, refer to the left-hand navigation.

Copyright © 2000–2014, Texas Instruments Incorporated

PACKAGING INFORMATION

Orderable Device	Status (1)	Package Type	Package Drawing	Pins	Package Qty	Eco Plan (2)	Lead/Ball Finish (6)	MSL Peak Temp (3)	Op Temp (°C)	Device Marking (4/5)	Samples
LM6132AIM	NRND	SOIC	D	8	95	TBD	Call TI	Call TI	-40 to 85	LM61 32AIM	
LM6132AIM/NOPB	ACTIVE	SOIC	D	8	95	Green (RoHS & no Sb/Br)	CU SN	Level-1-260C-UNLIM	-40 to 85	LM61 32AIM	Samples
LM6132AIMX	NRND	SOIC	D	8	2500	TBD	Call TI	Call TI	-40 to 85	LM61 32AIM	
LM6132AIMX/NOPB	ACTIVE	SOIC	D	8	2500	Green (RoHS & no Sb/Br)	CU SN	Level-1-260C-UNLIM	-40 to 85	LM61 32AIM	Samples
LM6132BIM	NRND	SOIC	D	8	95	TBD	Call TI	Call TI	-40 to 85	LM61 32BIM	
LM6132BIM/NOPB	ACTIVE	SOIC	D	8	95	Green (RoHS & no Sb/Br)	CU SN	Level-1-260C-UNLIM	-40 to 85	LM61 32BIM	Samples
LM6132BIMX	NRND	SOIC	D	8	2500	TBD	Call TI	Call TI	-40 to 85	LM61 32BIM	
LM6132BIMX/NOPB	ACTIVE	SOIC	D	8	2500	Green (RoHS & no Sb/Br)	CU SN	Level-1-260C-UNLIM	-40 to 85	LM61 32BIM	Samples
LM6132BIN/NOPB	ACTIVE	PDIP	P	8	40	Green (RoHS & no Sb/Br)	CU SN	Level-1-NA-UNLIM	-40 to 85	LM6132 BIN	Samples
LM6134AIM	NRND	SOIC	D	14	55	TBD	Call TI	Call TI	-40 to 85	LM6134AIM	
LM6134AIM/NOPB	ACTIVE	SOIC	D	14	55	Green (RoHS & no Sb/Br)	CU SN	Level-1-260C-UNLIM	-40 to 85	LM6134AIM	Samples
LM6134AIMX/NOPB	ACTIVE	SOIC	D	14	2500	Green (RoHS & no Sb/Br)	CU SN	Level-1-260C-UNLIM	-40 to 85	LM6134AIM	Samples
LM6134BIM	NRND	SOIC	D	14	55	TBD	Call TI	Call TI	-40 to 85	LM6134BIM	
LM6134BIM/NOPB	ACTIVE	SOIC	D	14	55	Green (RoHS & no Sb/Br)	CU SN	Level-1-260C-UNLIM	-40 to 85	LM6134BIM	Samples
LM6134BIMX/NOPB	ACTIVE	SOIC	D	14	2500	Green (RoHS & no Sb/Br)	CU SN	Level-1-260C-UNLIM	-40 to 85	LM6134BIM	Samples
LM6134BIN/NOPB	ACTIVE	PDIP	NFF	14	25	Green (RoHS & no Sb/Br)	CU SN	Level-1-NA-UNLIM	-40 to 85	LM6134BIN	Samples

(1) The marketing status values are defined as follows:
ACTIVE: Product device recommended for new designs.
LIFEBUY: TI has announced that the device will be discontinued, and a lifetime-buy period is in effect.
NRND: Not recommended for new designs. Device is in production to support existing customers, but TI does not recommend using this part in a new design.

PREVIEW: Device has been announced but is not in production. Samples may or may not be available.
OBSOLETE: TI has discontinued the production of the device.

(2) **RoHS:** TI defines "RoHS" to mean semiconductor products that are compliant with the current EU RoHS requirements for all 10 RoHS substances, including the requirement that RoHS substance do not exceed 0.1% by weight in homogeneous materials. Where designed to be soldered at high temperatures, "RoHS" products are suitable for use in specified lead-free processes. TI may reference these types of products as "Pb-Free".
RoHS Exempt: TI defines "RoHS Exempt" to mean products that contain lead but are compliant with EU RoHS pursuant to a specific EU RoHS exemption.
Green: TI defines "Green" to mean the content of Chlorine (Cl) and Bromine (Br) based flame retardants meet JS709B low halogen requirements of <=1000ppm threshold. Antimony trioxide based flame retardants must also meet the <=1000ppm threshold requirement.

(3) MSL, Peak Temp. - The Moisture Sensitivity Level rating according to the JEDEC industry standard classifications, and peak solder temperature.

(4) There may be additional marking, which relates to the logo, the lot trace code information, or the environmental category on the device.

(5) Multiple Device Markings will be inside parentheses. Only one Device Marking contained in parentheses and separated by a "~" will appear on a device. If a line is indented then it is a continuation of the previous line and the two combined represent the entire Device Marking for that device.

(6) Lead/Ball Finish - Orderable Devices may have multiple material finish options. Finish options are separated by a vertical ruled line. Lead/Ball Finish values may wrap to two lines if the finish value exceeds the maximum column width.

Important Information and Disclaimer: The information provided on this page represents TI's knowledge and belief as of the date that it is provided. TI bases its knowledge and belief on information provided by third parties, and makes no representation or warranty as to the accuracy of such information. Efforts are underway to better integrate information from third parties. TI has taken and continues to take reasonable steps to provide representative and accurate information but may not have conducted destructive testing or chemical analysis on incoming materials and chemicals. TI and TI suppliers consider certain information to be proprietary, and thus CAS numbers and other limited information may not be available for release.

In no event shall TI's liability arising out of such information exceed the total purchase price of the TI part(s) at issue in this document sold by TI to Customer on an annual basis.

TAPE AND REEL INFORMATION

REEL DIMENSIONS

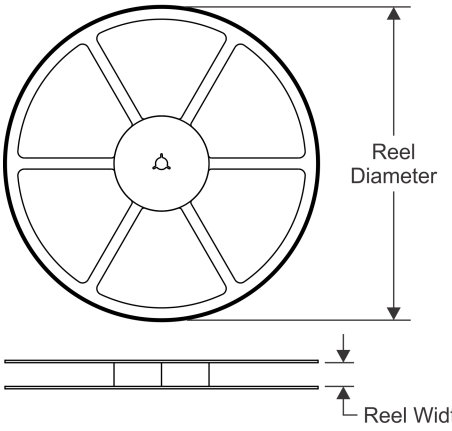

TAPE DIMENSIONS

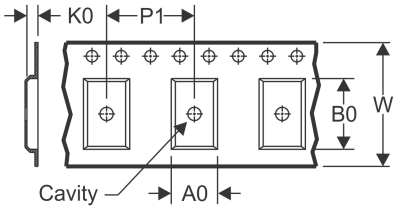

A0	Dimension designed to accommodate the component width
B0	Dimension designed to accommodate the component length
K0	Dimension designed to accommodate the component thickness
W	Overall width of the carrier tape
P1	Pitch between successive cavity centers

QUADRANT ASSIGNMENTS FOR PIN 1 ORIENTATION IN TAPE

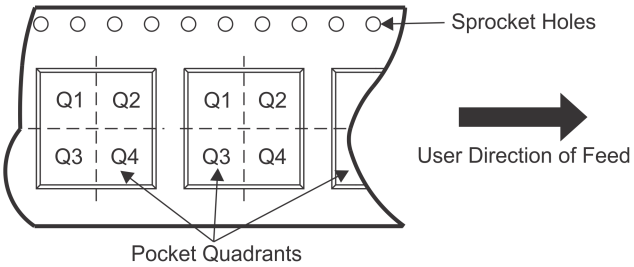

*All dimensions are nominal

Device	Package Type	Package Drawing	Pins	SPQ	Reel Diameter (mm)	Reel Width W1 (mm)	A0 (mm)	B0 (mm)	K0 (mm)	P1 (mm)	W (mm)	Pin1 Quadrant
LM6132AIMX	SOIC	D	8	2500	330.0	12.4	6.5	5.4	2.0	8.0	12.0	Q1
LM6132AIMX/NOPB	SOIC	D	8	2500	330.0	12.4	6.5	5.4	2.0	8.0	12.0	Q1
LM6132BIMX	SOIC	D	8	2500	330.0	12.4	6.5	5.4	2.0	8.0	12.0	Q1
LM6132BIMX/NOPB	SOIC	D	8	2500	330.0	12.4	6.5	5.4	2.0	8.0	12.0	Q1
LM6134AIMX/NOPB	SOIC	D	14	2500	330.0	16.4	6.5	9.35	2.3	8.0	16.0	Q1
LM6134BIMX/NOPB	SOIC	D	14	2500	330.0	16.4	6.5	9.35	2.3	8.0	16.0	Q1

TAPE AND REEL BOX DIMENSIONS

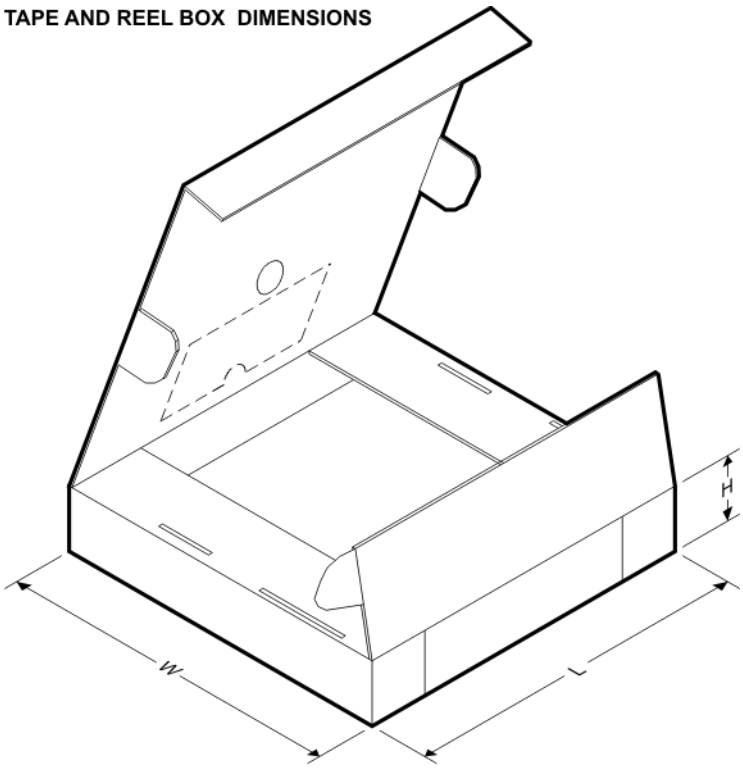

*All dimensions are nominal

Device	Package Type	Package Drawing	Pins	SPQ	Length (mm)	Width (mm)	Height (mm)
LM6132AIMX	SOIC	D	8	2500	367.0	367.0	35.0
LM6132AIMX/NOPB	SOIC	D	8	2500	367.0	367.0	35.0
LM6132BIMX	SOIC	D	8	2500	367.0	367.0	35.0
LM6132BIMX/NOPB	SOIC	D	8	2500	367.0	367.0	35.0
LM6134AIMX/NOPB	SOIC	D	14	2500	367.0	367.0	35.0
LM6134BIMX/NOPB	SOIC	D	14	2500	367.0	367.0	35.0

D (R–PDSO–G14) PLASTIC SMALL OUTLINE

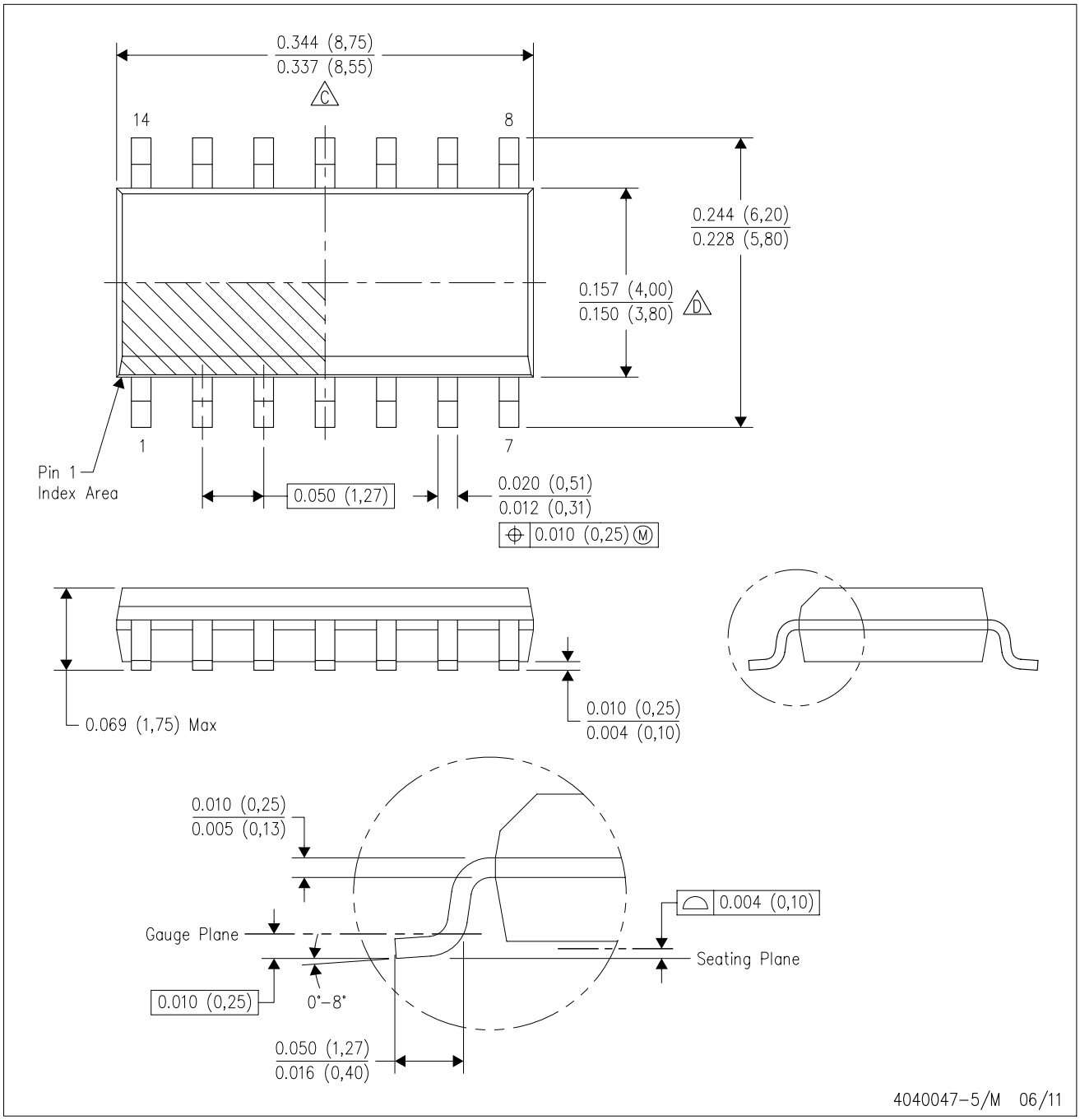

NOTES:
A. All linear dimensions are in inches (millimeters).
B. This drawing is subject to change without notice.
C. Body length does not include mold flash, protrusions, or gate burrs. Mold flash, protrusions, or gate burrs shall not exceed 0.006 (0,15) each side.
D. Body width does not include interlead flash. Interlead flash shall not exceed 0.017 (0,43) each side.
E. Reference JEDEC MS–012 variation AB.

D (R–PDSO–G14) PLASTIC SMALL OUTLINE

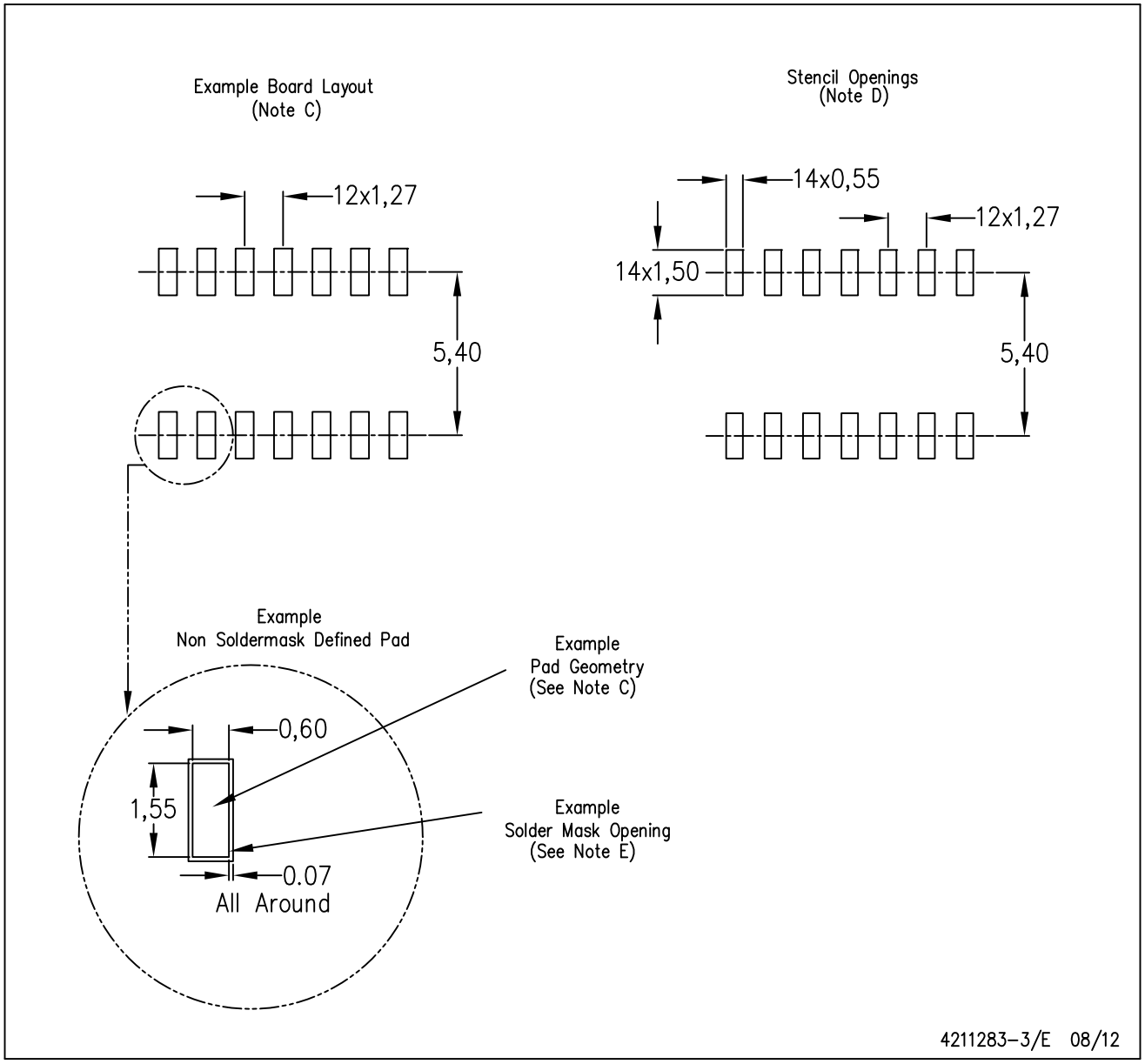

NOTES:
A. All linear dimensions are in millimeters.
B. This drawing is subject to change without notice.
C. Publication IPC–7351 is recommended for alternate designs.
D. Laser cutting apertures with trapezoidal walls and also rounding corners will offer better paste release. Customers should contact their board assembly site for stencil design recommendations. Refer to IPC–7525 for other stencil recommendations.
E. Customers should contact their board fabrication site for solder mask tolerances between and around signal pads.

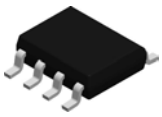

PACKAGE OUTLINE

D0008A

SOIC - 1.75 mm max height

SMALL OUTLINE INTEGRATED CIRCUIT

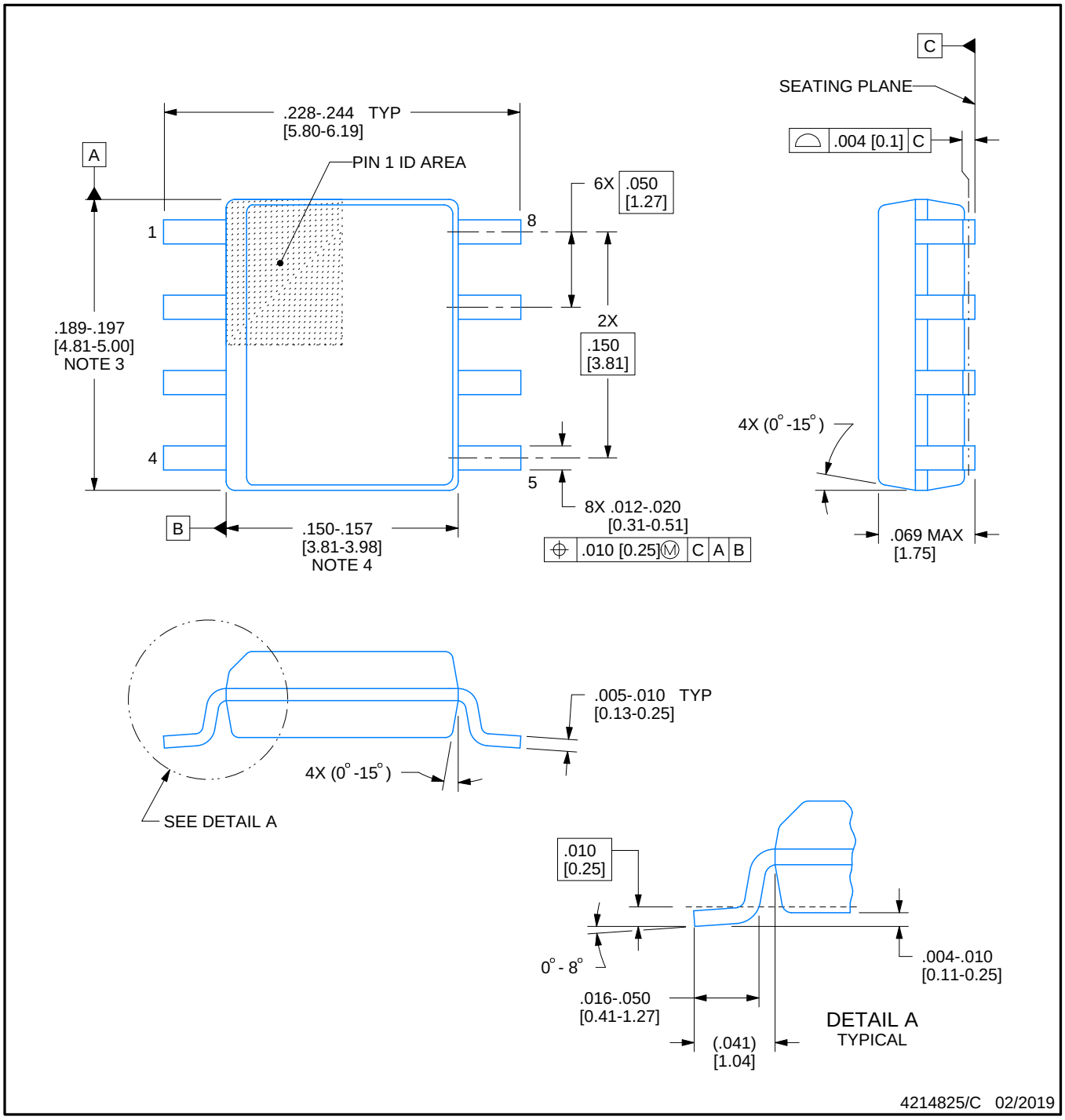

NOTES:

1. Linear dimensions are in inches [millimeters]. Dimensions in parenthesis are for reference only. Controlling dimensions are in inches. Dimensioning and tolerancing per ASME Y14.5M.
2. This drawing is subject to change without notice.
3. This dimension does not include mold flash, protrusions, or gate burrs. Mold flash, protrusions, or gate burrs shall not exceed .006 [0.15] per side.
4. This dimension does not include interlead flash.
5. Reference JEDEC registration MS-012, variation AA.

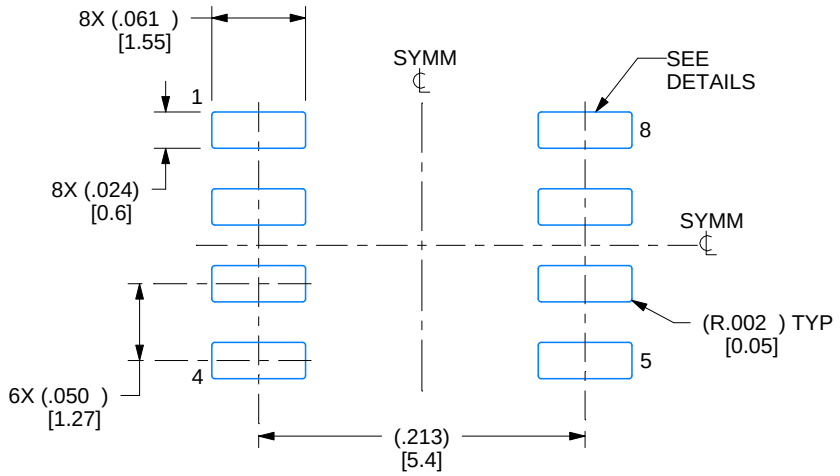

LAND PATTERN EXAMPLE
EXPOSED METAL SHOWN
SCALE:8X

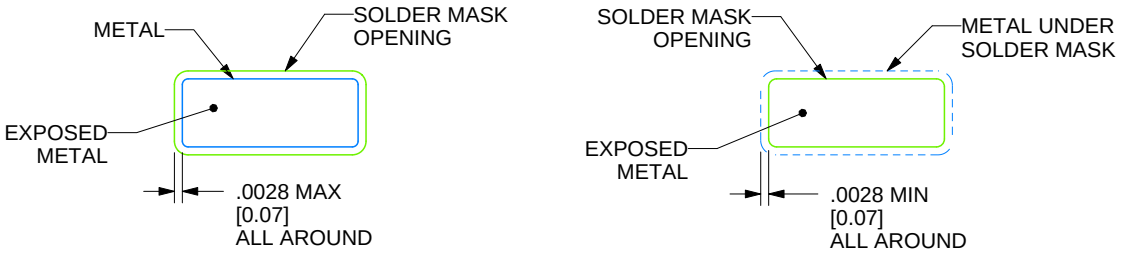

SOLDER MASK DETAILS

4214825/C 02/2019

NOTES: (continued)

6. Publication IPC-7351 may have alternate designs.
7. Solder mask tolerances between and around signal pads can vary based on board fabrication site.

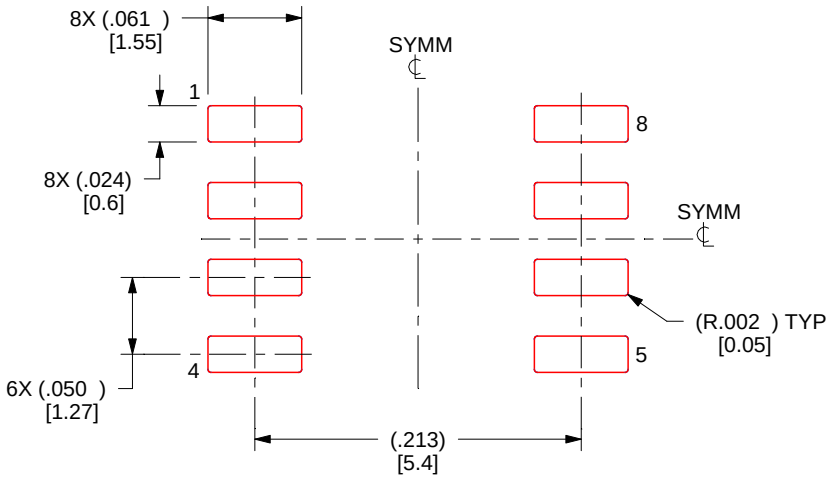

SOLDER PASTE EXAMPLE
BASED ON .005 INCH [0.125 MM] THICK STENCIL
SCALE:8X

4214825/C 02/2019

NOTES: (continued)

8. Laser cutting apertures with trapezoidal walls and rounded corners may offer better paste release. IPC-7525 may have alternate design recommendations.
9. Board assembly site may have different recommendations for stencil design.

P (R–PDIP–T8) PLASTIC DUAL–IN–LINE PACKAGE

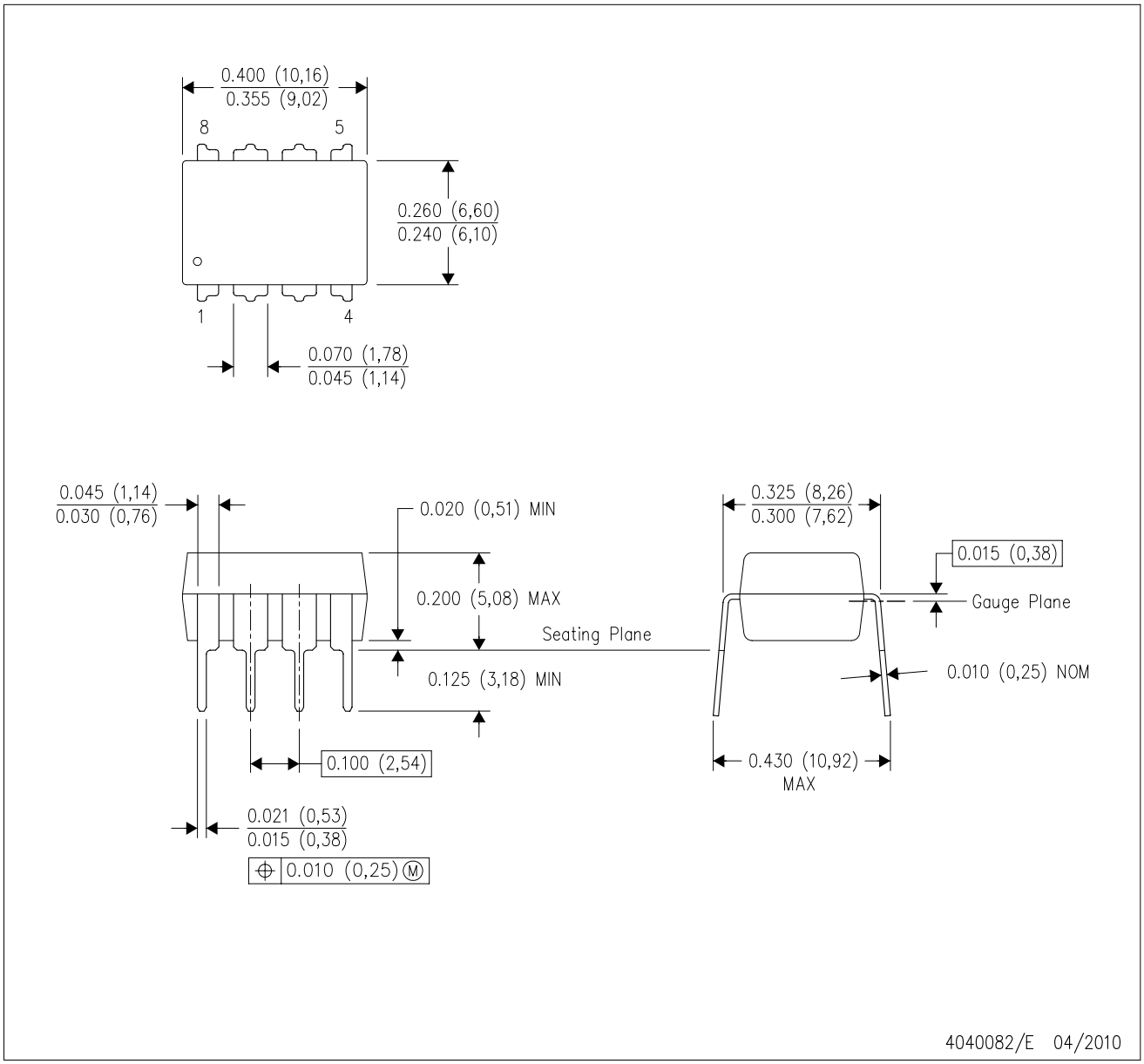

NOTES:
A. All linear dimensions are in inches (millimeters).
B. This drawing is subject to change without notice.
C. Falls within JEDEC MS–001 variation BA.

N0014A

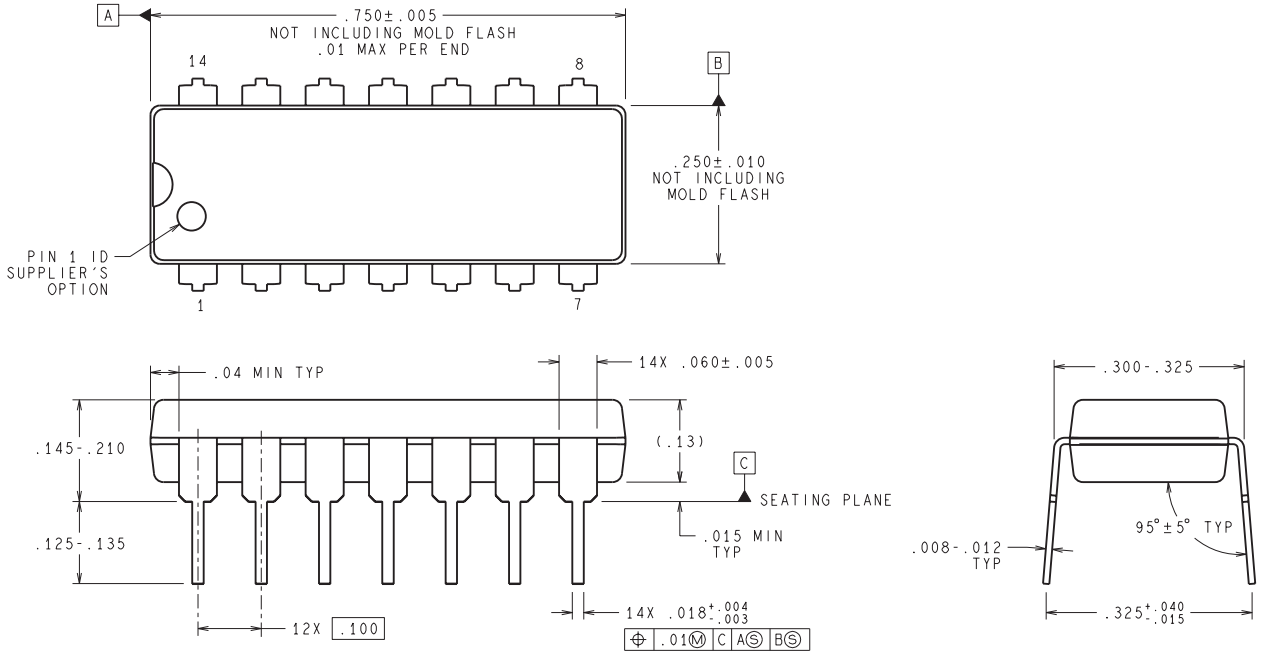

DIMENSIONS ARE IN INCHES
DIMENSIONS IN ( ) FOR REFERENCE ONLY

N14A (Rev G)

IMPORTANT NOTICE AND DISCLAIMER

TI PROVIDES TECHNICAL AND RELIABILITY DATA (INCLUDING DATASHEETS), DESIGN RESOURCES (INCLUDING REFERENCE DESIGNS), APPLICATION OR OTHER DESIGN ADVICE, WEB TOOLS, SAFETY INFORMATION, AND OTHER RESOURCES “AS IS” AND WITH ALL FAULTS, AND DISCLAIMS ALL WARRANTIES, EXPRESS AND IMPLIED, INCLUDING WITHOUT LIMITATION ANY IMPLIED WARRANTIES OF MERCHANTABILITY, FITNESS FOR A PARTICULAR PURPOSE OR NON-INFRINGEMENT OF THIRD PARTY INTELLECTUAL PROPERTY RIGHTS.

These resources are intended for skilled developers designing with TI products. You are solely responsible for (1) selecting the appropriate TI products for your application, (2) designing, validating and testing your application, and (3) ensuring your application meets applicable standards, and any other safety, security, or other requirements. These resources are subject to change without notice. TI grants you permission to use these resources only for development of an application that uses the TI products described in the resource. Other reproduction and display of these resources is prohibited. No license is granted to any other TI intellectual property right or to any third party intellectual property right. TI disclaims responsibility for, and you will fully indemnify TI and its representatives against, any claims, damages, costs, losses, and liabilities arising out of your use of these resources.

TI’s products are provided subject to TI’s Terms of Sale (www.ti.com/legal/termsofsale.html) or other applicable terms available either on ti.com or provided in conjunction with such TI products. TI’s provision of these resources does not expand or otherwise alter TI’s applicable warranties or warranty disclaimers for TI products.

Mailing Address: Texas Instruments, Post Office Box 655303, Dallas, Texas 75265
Copyright © 2019, Texas Instruments Incorporated

Looking for pricing, stock, or lifecycle information?

Click below to explore more details on WIN SOURCE:

- View LM6132AIN on WIN SOURCE
- Texas Instruments Information

Optimize Your Supply Chain with WIN SOURCE Solutions

- Global Sourcing Solution
- Obsolete Management
- Cost Control Management
- Shortage Management
- Alternative Solution
- Excess Inventory Management