THE DATASHEET OF

MAX1967EUB+

www.win-source.net 0086-755-83957316

19-2286; Rev 1; 9/03

Low-Cost Voltage-Mode PWM Step-Down Controllers

General Description

The MAX1966/MAX1967 are voltage-mode pulse-width-modulated (PWM), step-down DC-DC controllers that are ideal for a variety of cost-sensitive applications. They drive low-cost N-MOSFETs for both the high-side switch and synchronous rectifier and require no external Schottky power diode or current-sense resistor. Short-circuit and current-limit protection is provided by sensing the drain-to-source voltage on the low-side FET. Both devices can supply outputs as low as 0.8V and are well suited for DSP cores and other low-voltage logic.

The MAX1966 has an input range of 2.7V to 5.5V while the MAX1967 has an input range of 2.7V to 28V. In ultra-low-cost designs, the MAX1966/MAX1967 can provide efficiency exceeding 90% and can achieve 95% efficiency with optimized component selection.

The MAX1966/MAX1967 operate at 100kHz and accommodate aluminum electrolytic capacitors and powdered-iron core magnetics in minimum-cost designs. They also provide excellent performance with high-performance surface-mount components. The MAX1966 is available in a low-cost 8-pin SO package. The MAX1967 is available in a 10-pin µMAX package.

Applications

- Set-Top Boxes
- Graphic Card Supplies
- xDSL Modems and Routers
- Cable Modems and Routers
- Telecom Power Supplies
- Networking Power Supplies
- Termination Supplies

Pin Configurations

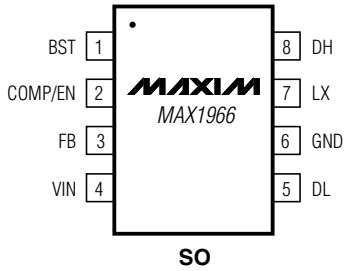

Pin Configurations continued at end of data sheet.

Features

- **Cost-Optimized Design**
- **No Schottky Diode or Current-Sense Resistor Required**
- **>95% Efficiency**
- **Low-Cost External Components**
- **All N-Channel FET Design**
- **2.7V to 5.5V Input Range (MAX1966)**
- **2.7V to 28V Input Range (MAX1967)**
- **0.8V Feedback for Low-Voltage Outputs**
- **100kHz Switching Frequency Accommodates Low-Cost Components**
- **Thermal Shutdown**
- **Output Current-Limit and Short-Circuit Protection**

Ordering Information

PART	TEMP RANGE	PIN-PACKAGE
MAX1966ESA	-40°C to +85°C	8 SO
MAX1967EUB	-40°C to +85°C	10 µMAX

Typical Operating Circuit

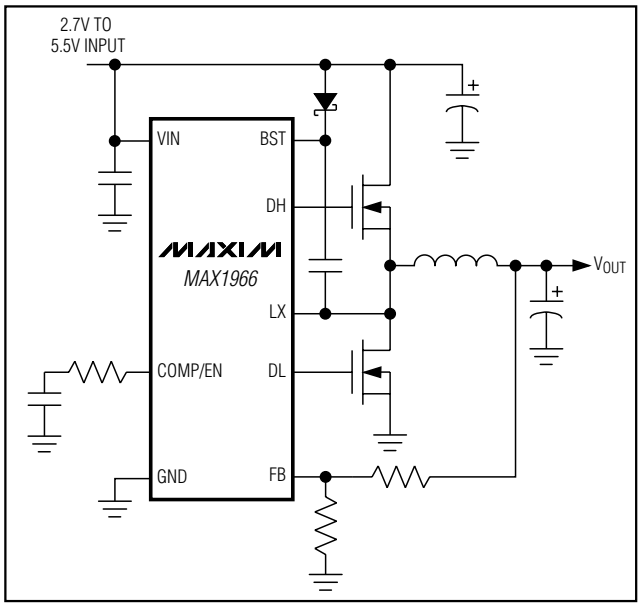

For pricing, delivery, and ordering information, please contact Maxim/Dallas Direct! at 1-888-629-4642, or visit Maxim's website at www.maxim-ic.com.

Low-Cost Voltage-Mode PWM Step-Down Controllers

ABSOLUTE MAXIMUM RATINGS

(All Voltages Referenced to GND, Unless Otherwise Noted)
VIN to GND (MAX1966).....-0.3V to +6V
VIN to GND (MAX1967).....-0.3V to +30V
VCC to GND (MAX1967).....-0.3V, lower of 6V or (V_{IN} + 0.3V)
FB to GND .....-0.3V to +6V
DL, COMP/EN to GND (MAX1966) .....-0.3V to V_{IN} + 0.3V
VL, DL, COMP/EN to GND (MAX1967).....-0.3V to V_{CC} + 0.3V
BST to LX.....-0.3V to +6V
DH to LX.....-0.3V to BST + 0.3V
VL Short to GND (MAX1967) 5s
RMS Input Current (any pin).....±50mA
Continuous Power Dissipation (T_A = +70°C)
8-Pin SO (derate 5.88mW/°C above +70°C).....471mW
10-Pin µMAX (derate 5.6mW/°C above +70°C) 444mW
Operating Temperature Range .....-40°C to +85°C
Junction Temperature.....+150°C
Storage Temperature Range .....-65°C to +150°C
Lead Temperature (soldering, 10s) .....+300°C

Stresses beyond those listed under "Absolute Maximum Ratings" may cause permanent damage to the device. These are stress ratings only, and functional operation of the device at these or any other conditions beyond those indicated in the operational sections of the specifications is not implied. Exposure to absolute maximum rating conditions for extended periods may affect device reliability.

ELECTRICAL CHARACTERISTICS

(VIN = VL = VCC = 5V (MAX1967), VIN = 5V (MAX1966), T_A = -40°C to +85°C (Note 1), unless otherwise noted. Typical values are at T_A = +25°C.)

PARAMETER	SYMBOL	CONDITIONS	MIN	TYP	MAX	UNITS
MAX1967 VIN Operating Range			4.9		28	V
MAX1967 Operating Range with VIN = VL			2.7		5.5	V
MAX1966 VIN Operating Range			2.7		5.5	V
MAX1967 VL Undervoltage Lockout (UVLO) Trip Level		Rising and falling edge, hysteresis = 2%	2.35	2.53	2.66	V
MAX1966 VIN UVLO Trip Level		Rising and falling edge, hysteresis = 2%	2.35	2.53	2.66	V
Operating Supply Current		FB = 0.88V, no switching		0.7	3	mA
VL Output Voltage (MAX1967 Only)		5.5V < VIN < 28V, 1mA < I_{VL} < 25mA, FB = 0.88V	4.67	5	5.3	V
Thermal Shutdown (Note 1)		Rising temperature, typical hysteresis = 10°C		160		°C
OSCILLATOR						
Frequency	f_{OSC}	0°C to +85°C	82	102	124	kHz
		-40°C to +85°C	79	102	127	
Minimum Duty Cycle					10	%
Maximum Duty Cycle			90	95		%
SOFT-START						
Digital Ramp Period		Internal 6-bit DAC for converter to ramp from 0 to full output voltage		1024 / f_{OSC}		s
Soft-Start Levels				V_{OUT} / 64		V
ERROR AMPLIFIER						
FB Regulation Voltage (MAX1967)		2.7V < VCC < 5.5V, 0°C to +85°C	0.787	0.800	0.815	V
		2.7V < VCC < 5.5V, -40°C to +85°C	0.782	0.800	0.815	
FB Regulation Voltage (MAX1966)		2.7V < VIN < 5.5V, 0°C to +85°C	0.787	0.800	0.815	V
		2.7V < VIN < 5.5V, -40°C to +85°C	0.782	0.800	0.815	
FB to COMP/EN Gain				4000		V/V

ELECTRICAL CHARACTERISTICS (continued)

(VIN = VL = VCC = 5V (MAX1967), VIN = 5V (MAX1966), T_A = -40°C to +85°C, unless otherwise noted. Typical values are at T_A = +25°C.)

PARAMETER	SYMBOL	CONDITIONS	MIN	TYP	MAX	UNITS
FB to COMP/EN Transconductance		-5µA < $I_{COMP/EN}$ < 5µA	70	108	160	µS
FB Input Bias Current		V_{FB} = 0.880V		3	100	nA
COMP/EN Source Current		$V_{COMP/EN}$ = 0	15	46	100	µA
Current-Limit Threshold Voltage (Across Low-Side NFET)		LX to GND	-340	-305	-270	mV
MOSFET DRIVERS						
Break-Before-Make Time				30		ns
DH On-Resistance in Low State		V_{BST} = 5V, V_{LX} = 0, I_{DH} = -50mA		1.6	4	Ω
DH On-Resistance in High State		V_{BST} = 5V, V_{LX} = 0, I_{DH} = 50mA		2.5	5.5	Ω
DH Peak Source and Sink Current		V_{BST} = 5V, V_{LX} = 0, DH = 2.5V		1		A
DL On-Resistance in Low State		I_{DL} = -50mA		1.1	2.5	Ω
DL On-Resistance in High State		I_{DL} = 50mA		2.5	5.5	Ω
DL Source Current		V_{DL} = 2.5V		1		A
DL Sink Current		V_{DL} = 2.5V		2		A
Maximum Total (DH + DL) Average Source Current		V_{BST} = 5V, V_{LX} = 0		25		mA
BST Leakage Current		V_{BST} = 33V, V_{LX} = 28V		0	50	µA
LX Leakage Current		V_{BST} = 33V, V_{LX} = 28V		33	100	µA

Note 1: Specifications to -40°C are guaranteed by design and not production tested.

Note 2: Thermal shutdown disables the buck regulator when the die reaches this temperature. Soft-start is reset and COMP/EN is discharged to zero. In the MAX1967, the VL regulator remains on during thermal shutdown.

Low-Cost Voltage-Mode PWM Step-Down Controllers

Typical Operating Characteristics

(T_A = +25°C, unless otherwise noted.)

EFFICIENCY vs. LOAD CURRENT (1.2V/3A)

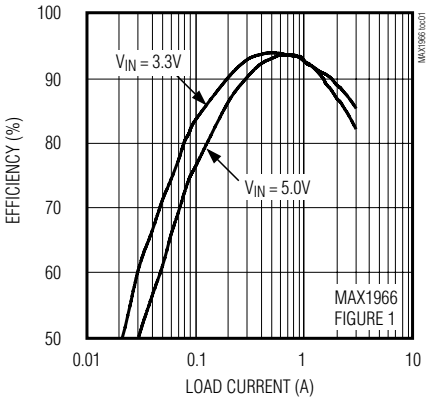

EFFICIENCY vs. LOAD CURRENT (1.8V/3A) MAX1966

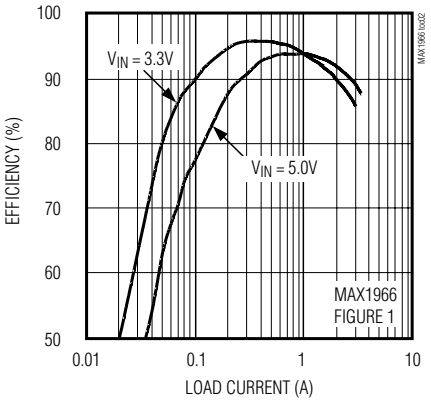

EFFICIENCY vs. LOAD CURRENT (1.2V/5A) MAX1966

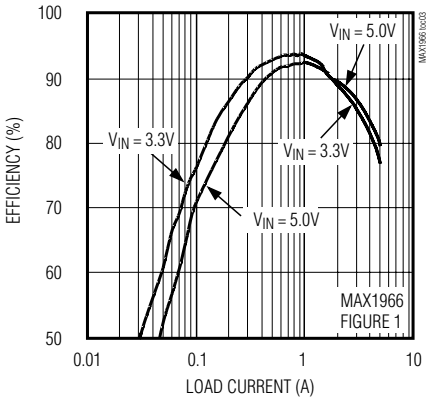

EFFICIENCY vs. LOAD CURRENT (1.8V/5A) MAX1966

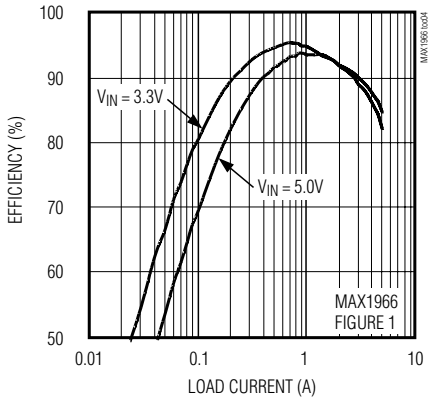

EFFICIENCY vs. LOAD CURRENT (1.2V/3A) MAX1967

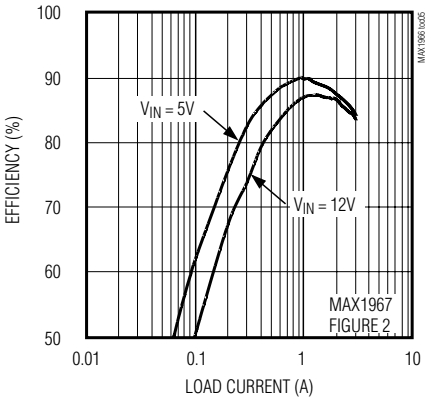

EFFICIENCY vs. LOAD CURRENT (1.8V/3A) MAX1967

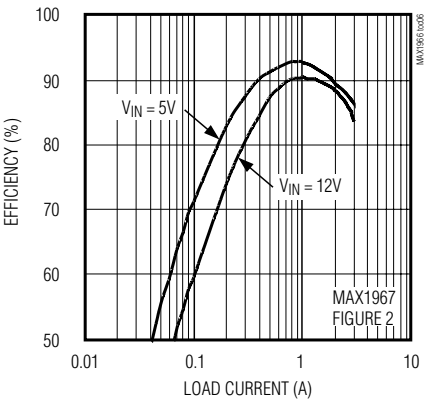

EFFICIENCY vs. LOAD CURRENT (3.3V/3A) MAX1967

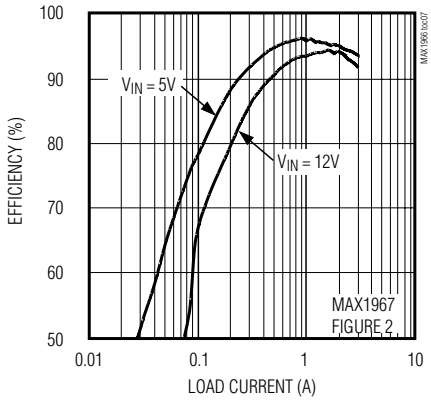

EFFICIENCY vs. LOAD CURRENT (1.2V/5A) MAX1967

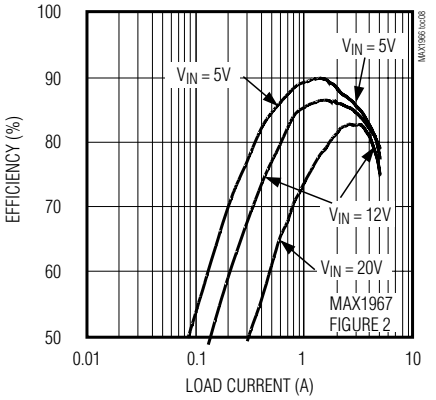

EFFICIENCY vs. LOAD CURRENT (1.8V/5A) MAX1967

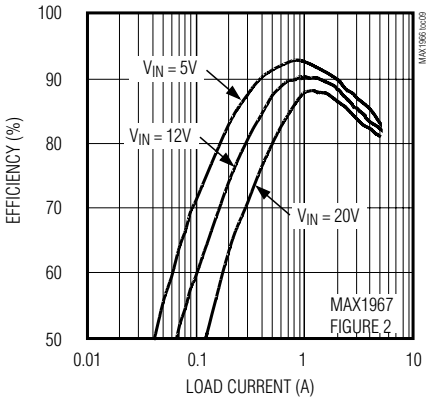

Typical Operating Characteristics (continued)

(T_A = +25°C, unless otherwise noted.)

EFFICIENCY vs. LOAD CURRENT (3.3V/5A) MAX1967

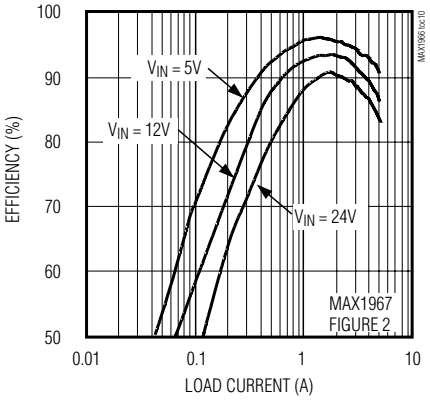

FREQUENCY vs. INPUT VOLTAGE

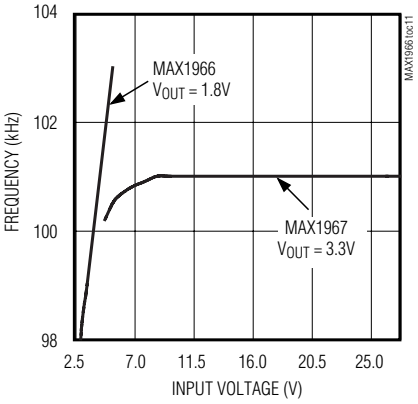

FREQUENCY vs. TEMPERATURE

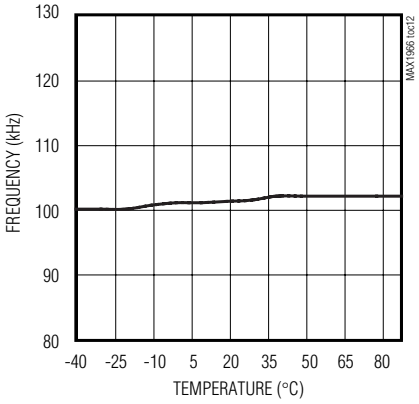

MAX1966 SUPPLY CURRENT vs. INPUT VOLTAGE

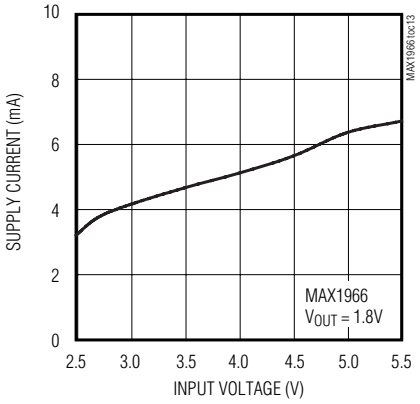

MAX1967 SUPPLY CURRENT vs. INPUT VOLTAGE

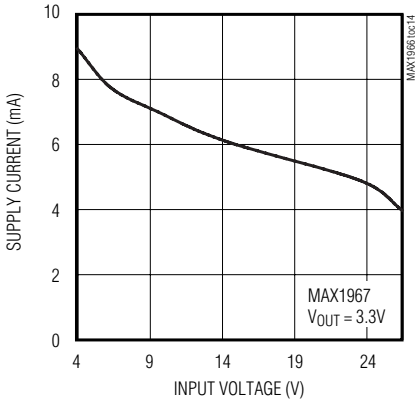

LOAD STEP RESPONSE

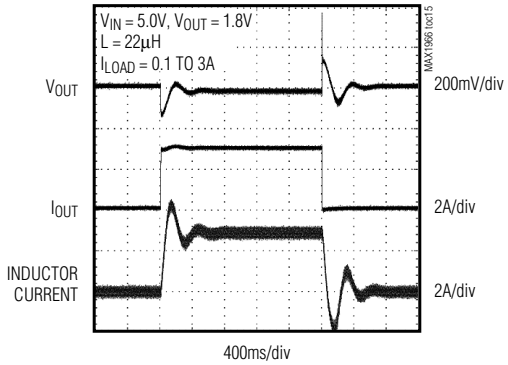

START-UP WAVEFORM

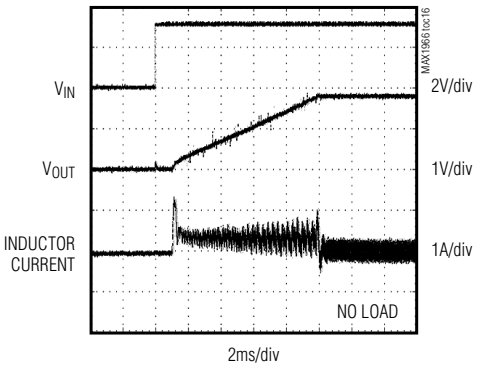

Low-Cost Voltage-Mode PWM Step-Down Controllers

Typical Operating Characteristics (continued)

(T_A = +25°C, unless otherwise noted.)

OUTPUT OVERLOAD WAVEFORM

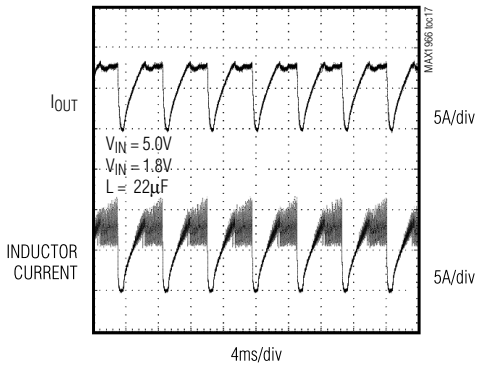

SHUTDOWN WAVEFORMS

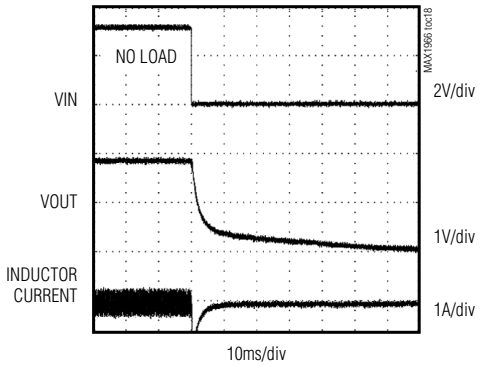

Pin Description

PIN		NAME	FUNCTION
MAX1966	MAX1967		
1	10	BST	Positive Supply of DH Driver. Connect 0.1µF ceramic capacitor between BST and LX.
2	1	COMP/EN	Compensation Pin. Pulling COMP/EN low with an open-collector or open-drain device turns off the output.
3	2	FB	Feedback Input. Connect a resistive divider network to set V_{OUT}. F_B threshold is 0.8V.
—	3	VCC	Internal Chip Supply. Connect to VL via a 10Ω resistor.
4	4	VIN	Power Supply for LDO Regulator in the MAX1967 and Chip Supply for the MAX1966. Bypass with a ceramic capacitor to ground (see application circuit).
—	5	VL	Output of Internal 5V LDO. Bypass with a 2.2µF capacitor to GND, or if VIN < 5.5, connect VL to VIN and bypass with a 0.1µF capacitor to GND.
5	6	DL	Low-Side External MOSFET Gate-Driver Output. D_L swings from V_L to GND.
6	7	GND	Ground and Negative Current-Sense Input
7	8	LX	Inductor Switching Node. L_X is used for both current limit and the return supply of the D_H driver.
8	9	DH	High-Side External MOSFET Gate-Driver Output. D_H swings from BST to L_X.

Detailed Description

The MAX1966/MAX1967 are BiCMOS switch-mode power-supply controllers designed to implement simple, buck-topology regulators in cost-sensitive applications. The main power-switching circuit consists of two N-channel MOSFETs (or a dual MOSFET), an inductor, and input and output filter capacitors. An all N-channel synchronous-rectified design provides high efficiency at reduced cost. Gate drive for the N-channel high-side switch is provided by a flying capacitor boost circuit that uses a 0.1µF capacitor connected to BST.

Major circuit blocks of the MAX1966/MAX1967 are shown in Figures 1 and 2:

- Control Logic
- Gate Driver Outputs
- Current-Limit Comparator
- Clock Generator
- Ramp Generator
- Error Amplifier
- Error Comparator
- Soft-Start
- 5V Linear Regulator (MAX1967)
- 800mV Reference
- Thermal Shutdown

In the MAX1996, most blocks are powered from V_{IN}. In the MAX1967, an internal 5V linear regulator steps down the input voltage to supply both the IC and the gate drivers. The synchronous-rectified gate driver is directly powered from 5V V_L, while the high-side-switch gate driver is indirectly powered from V_L plus an external diode-capacitor boost circuit.

Resistorless Current Limit

The MAX1966/MAX1967 use the $R_{DS(ON)}$ of the low-side N-channel MOSFET to sense the current. This eliminates the need for an external sense resistor usually placed in series with the output. The voltage measured across the low-side $R_{DS(ON)}$ is compared to a fixed -305mV reference (Figures 1 and 2). The peak inductor current limit is given by the equation below:

$$I_{PEAK} = 305mV / R_{DS(ON)}$$

MOSFET Gate Drivers

The DH and DL drivers are optimized for driving MOSFETs with low gate charge. An adaptive dead-time circuit monitors the DL output and prevents the high-side FET from turning on until the low-side MOSFET is fully off. There must be a low-resistance, low-inductance connection from the DL driver to the MOSFET gate for the adaptive dead-time circuit to work properly. Otherwise, the sense circuitry in the MAX1966/MAX1967 detects the MOSFET gate as off while there is charge left on the gate. Use very short, wide traces measuring no less than 50mils to 100mils wide if the MOSFET is 1in away from the MAX1966/MAX1967. The same type of adaptive dead-time circuit monitors the DH off edge. The same recommendations apply for the gate connection of the high-side MOSFET.

The internal pulldown transistor that drives DL low is robust, with a 1.1Ω typical on-resistance. This helps prevent DL from being pulled up due to capacitive coupling from the drain to the gate of the low-side synchronous-rectifier MOSFET during the fast rise time of the inductor node. The gate drivers are capable of driving up to 1A. Use MOSFETs with combined total gate charge of less than 200nC and a maximum V_{TH} of 3.5V.

Internal Soft-Start

The MAX1966/MAX1967 feature an internally set soft-start function that limits inrush current. It accomplishes this by ramping the internal reference input to the controller transconductance amplifier from 0 to the 0.8V reference voltage. The ramp time is 1024 oscillator cycles that begins when initial power is applied. At the nominal 100kHz switching rate, the soft-start ramp is approximately 10ms. The soft-start does not function if the MAX1966/MAX1967 are shut down by pulling COMP/EN low.

High-Side Gate-Drive Supply (BST)

Gate-drive voltage for the high-side N-channel switch is generated by a flying-capacitor boost circuit (Figures 3 and 4). The flying capacitor is connected between BST and LX.

On startup, the synchronous rectifier (low-side MOSFET) forces LX to ground and charges the boost capacitor to 5V. On the second half-cycle, the MAX1966/MAX1967 turn on the high-side MOSFET by closing an internal switch between BST and DH. This provides the necessary gate-to-source voltage to drive the high-side FET gate above its source at the input voltage.

Internal 5V Linear Regulator (MAX1967)

All MAX1967 functions are internally powered from an on-chip, low-dropout 5V regulator. The MAX1967 has a maximum regulator input voltage (V_{VIN}) of 28V. The VCC pin must be connected to VL through a 10Ω resistor and VL must be bypassed with a 2.2µF capacitor to GND. For operation at V_{VIN} < 5V, connect VL to VIN

Low-Cost Voltage-Mode PWM Step-Down Controllers

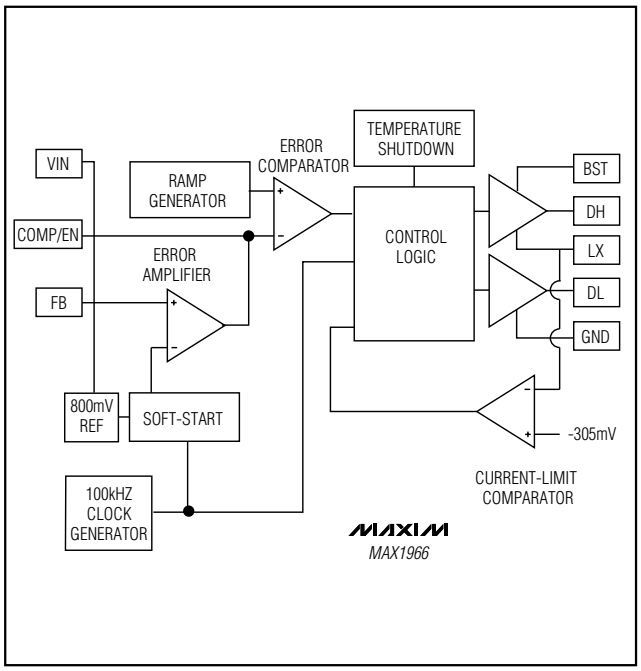

Figure 1. MAX1966 Functional Diagram

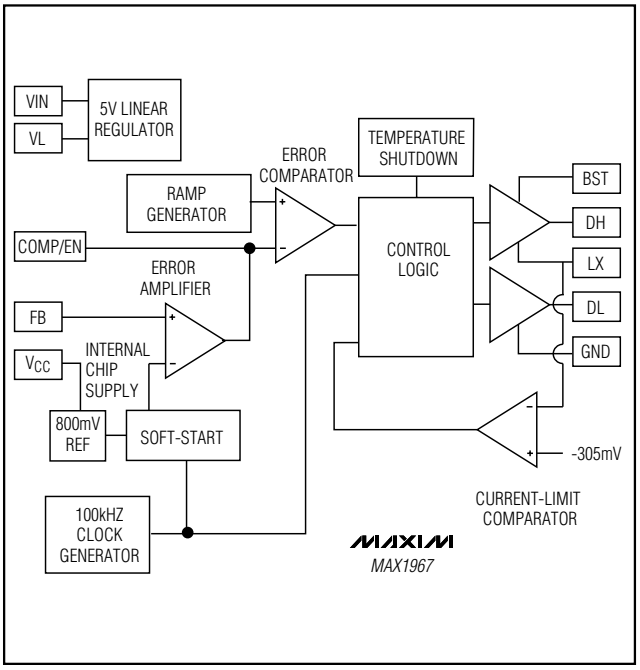

Figure 2. MAX1967 Functional Diagram

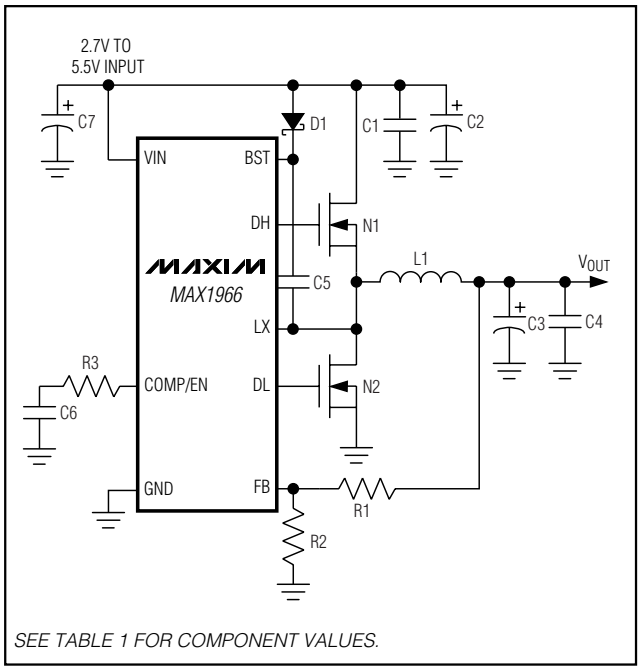

Figure 3. MAX1966 Typical Application

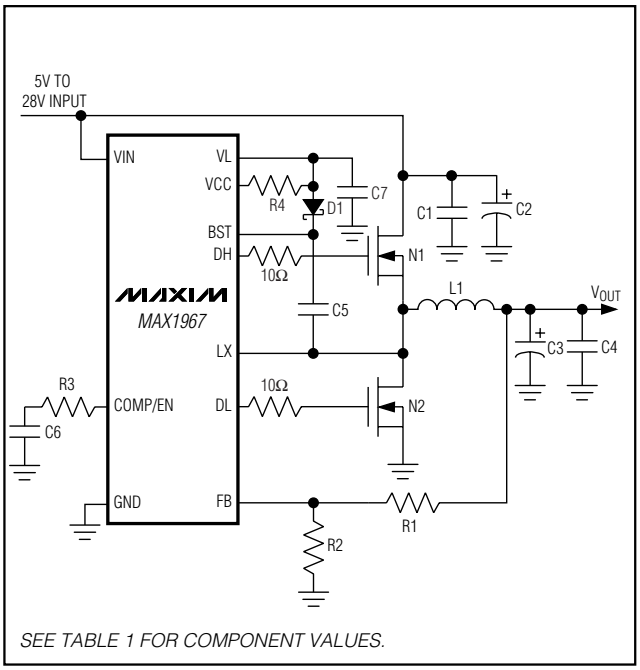

Figure 4. MAX1967 Typical Application

and keep a 0.1µF capacitor between VL and GND close to the chip. The V_{IN}-to-V_L dropout voltage is typically 70mV at 25mA current, so when V_{VIN} is less than 5V, V_{VL} is typically V_{VIN} - 70mV.

The internal linear regulator can source a minimum of 25mA to supply the IC and power the low-side and high-side FET drivers.

Duty-Factor Limitations for Low V_{OUT}/V_{VIN} Ratios

The MAX1966/MAX1967s' output voltage is adjustable down to 0.8V. However, the minimum duty factor may limit the ability to supply low-voltage outputs from high-voltage inputs. With high-input voltages, the required duty factor is approximately:

$$\left(V_{OUT} + R_{DS(ON)} \times I_{LOAD}\right) / V_{VIN}$$

where $R_{DS(ON)} \times I_{LOAD}$ is the voltage drop across the synchronous rectifier. The MAX1966/MAX1967s' minimum duty factor is 10%, so the maximum input voltage ($V_{VIN(DFMAX)}$) that can supply a given output voltage is:

$$V_{VIN(DFMAX)} \leq 10\left(V_{OUT} + R_{DS(ON)} \times I_{LOAD}\right)$$

If the circuit cannot attain the required duty factor dictated by the input and output voltages, the output voltage still remains in regulation. However, there may be intermittent or continuous half-frequency operation as the controller attempts to lower the average duty factor by deleting pulses. This can increase output voltage ripple and inductor current ripple, which increases noise and reduces efficiency. Furthermore, circuit stability is not guaranteed.

Applications Information

Design Procedure

Component selection is primarily dictated by the following criteria:

1) **Input Voltage Range**: The maximum value ($V_{VIN(MAX)}$) must accommodate the worst-case high-input voltage. The minimum value ($V_{VIN(MIN)}$) must account for the lowest input voltage after drops due to connectors, fuses, and switches are considered. In general, lower input voltages provide the best efficiency.
2) **Maximum Load Current**: There are two current values to consider. Peak load current ($I_{LOAD(MAX)}$) determines the instantaneous component stresses and filtering requirements and is key in determining output capacitor requirements. $I_{LOAD(MAX)}$ also determines the required inductor saturation rating and the design of the current-limit circuit. Continuous load current (I_{LOAD}) determines the thermal stresses, input capacitor, and MOSFETs, as well as the RMS ratings of other heat-contributing components such as the inductor.
3) **Inductor Value**: This choice provides tradeoffs between size, transient response, and efficiency. Higher inductance value results in lower inductor ripple current, lower peak current, lower switching losses, and, therefore, higher efficiency at the cost of slower transient response and larger size. Lower inductance values result in large ripple currents, smaller size, and poorer efficiency, while also providing faster transient response. Except for low-current applications, most circuits exhibit a good balance between efficiency and economics with a minimum inductor value that causes the circuit to operate at the edge of continuous conduction (where the inductor current just touches zero with every cycle at maximum load). Inductor values lower than this grant no further size-reduction benefit.

Table 1 shows representative values for some typical applications up to 5A. With proper component selection, outputs of 20A or more are practical with the MAX1966/MAX1967. The components listed in Table 1 were selected assuming a minimum cost design goal. The MAX1966/MAX1967 can effectively operate with a wide range of components.

Setting the Output Voltage

An output voltage between 0.8V and (0.9V x V_{VIN}) can be configured by connecting F_B pin to a resistive divider between the output and GND (Figures 3 and 4). Select resistor R2 in the 1kΩ to 10kΩ range. R1 is then given by:

$$R_1 = R_2\left(\frac{V_{OUT}}{V_{FB}} - 1\right)$$

where V_{FB} = 0.8V.

Inductor Selection

Determine an appropriate inductor value with the following equation:

$$L = V_{OUT} \times \frac{\left(V_{IN} - V_{OUT}\right)}{V_{VIN} \times f_{OSC} \times LIR \times I_{LOAD(MAX)}}$$

where LIR is the ratio of inductor ripple current to average continuous current at a minimum duty cycle. Choosing LIR between 20% to 50% results in a good

compromise between efficiency and economy. Choose a low-loss inductor having the lowest possible DC resistance. Ferrite-core-type inductors are often the best choice for performance, however; the MAX1966/MAX1967s' 100kHz switching rate also allows the use of powdered-iron cores in ultra-low-cost applications where efficiency is not critical. With any core material, the core must be large enough not to saturate at the peak inductor current (I_{PEAK}):

$$I_{PEAK} = I_{LOAD(MAX)} + \left(\frac{LIR}{2}\right) \times I_{LOAD(MAX)}$$

Setting the Current Limit

The MAX1966/MAX1967 provide current limit by sensing the voltage across the external low-side MOSFET. The current-limit threshold voltage is nominally -305mV. The MOSFET on-resistance required to allow a given peak inductor current is:

$$R_{DS(ON)MAX} \leq 305mV / I_{PEAK}$$

or

$$R_{DS(ON)MAX} \leq \frac{305mV}{I_{LOAD(MAX)} \times \left(1+\frac{LIR}{2}\right)}$$

in terms of actual output current.

A limitation of sensing current across MOSFET resistance is that current-limit threshold is not accurate since the MOSFET $R_{DS(ON)}$ specification is not precise. This type of current limit provides a coarse level of fault protection. It is especially suited when the input source is already current limited or otherwise protected. However, since current-limit tolerance may be ±45%, this method may not be suitable in applications where this device's current limit is the primary safety mechanism, or where accurate current limit is required.

Output Capacitor Selection

The output filter capacitor must have low enough equivalent series resistance (ESR) to meet output ripple and load transient requirements, yet have high enough ESR to satisfy stability requirements. In addition, the capacitance value must be high enough to absorb the inductor energy going from a full-load to no-load condition if such load changes are anticipated in the system.

In applications where the output is subject to large load transients, the output capacitor's size depends primarily on how low an ESR is needed to prevent the output from dipping too low under load transients. Ignoring the sag due to finite capacitance:

$$R_{ESR} \leq \frac{V_{DIP}}{I_{LOAD(MAX)}}$$

In applications with less severe load steps, the output capacitor's size may then primarily depend on how low an ESR is required to maintain acceptable output ripple:

$$R_{ESR} \leq \frac{V_{RIPPLE}}{LIR \times I_{LOAD(MAX)}}$$

The actual capacitance value required relates to the physical size and technology needed to achieve low ESR. Thus, the capacitor is usually selected by physical size, ESR, and voltage rating rather than by capacitance value. With current capacitor technology, once the ESR requirement is satisfied, the capacitance is usually also sufficient. When using a low-capacity filter capacitor such as ceramic or polymer types, capacitor size is usually determined by the capacitance needed to prevent undershoot and overshoot voltages during load transients. The overshoot voltage is given by:

$$V_{SOAR} = \frac{L \times I_{PEAK}^2}{2 \times V_{OUT} \times C_{OUT}}$$

Generally, once enough capacitance is added to meet the overshoot requirement, undershoot at the rising load edge is no longer a problem.

Stability and Compensation

To ensure stable operation, use the following compensation procedure:

1) Determine accaptable output ripple and select the inductor and output capacitor values as outlined in the *Inductor Selection* and *Output Capacitor Selection* sections.
2) Check to make sure that output capacitor ESR zero is less than f_{OSC}/π. Otherwise, increase capacitance until this condition is satisfied.
3) Select R3 value to set high-frequency error-amplifier gain so that the unity-gain frequency of the loop occurs at the output ESR zero:

$$R_3 = \frac{V_{OUT}}{80 \times 10^{-6} \times V_{VIN} \times R_{ESR}} \sqrt{\frac{L}{C_{OUT}}} (\Omega)$$

A good choice for R_3 is 50kΩ. Do not exceed 100kΩ.

4) Select compensation capacitor C_6 so that the error amp zero is equal to the complex pole frequency LC of the inductor and output capacitor:

$$C_6 = \frac{\sqrt{L \times C_{OUT}}}{R_3}$$

Input Capacitor Selection

The input capacitor (C_2) reduces noise injection and the current peaks drawn from the input supply. The source impedance to the input supply determines the value of C_2. High source impedance requires high input capacitance. The input capacitor must meet the ripple current requirement (I_{RMS}) imposed by the switching currents. The RMS input ripple current is given by:

$$I_{RMS} = I_{LOAD} \times \frac{\sqrt{V_{OUT} \times (V_{VIN} - V_{OUT})}}{V_{VIN}}$$

For optimal circuit reliability, choose a capacitor that has less than a 10°C temperature rise at the peak ripple current.

Power MOSFET Selection

The MAX1966/MAX1967s' step-down controller drives two external logic-level N-channel MOSFETs. The key selection parameters are:

1) On-resistance ($R_{DS(ON)}$) of both MOSFETs for current limit and efficiency
2) Current capability of V_L (MAX1967 only) and gate charge (Q_T)
3) Voltage rating and maximum input voltage

MOSFET Power Dissipation

Worst-case conduction losses occur at the duty factor extremes. For the high-side MOSFET, the worst-case power dissipation due to resistance occurs at minimum input voltage:

$$P_{D(N1RESISTIVE)} = \frac{V_{OUT}}{V_{VIN(MIN)}} \times I_{LOAD}^2 \times R_{DS(ON)}$$

The following switching loss calculation for the high-side N-FET provides an approximation, but is no substitute for evaluation:

$$P_{D(N1/SWITCHING)} = \frac{I_{LOAD}}{I_{GATE}} \times V_{VIN(MAX)}^2 \times f_{OSC} \times C_{RSS}$$

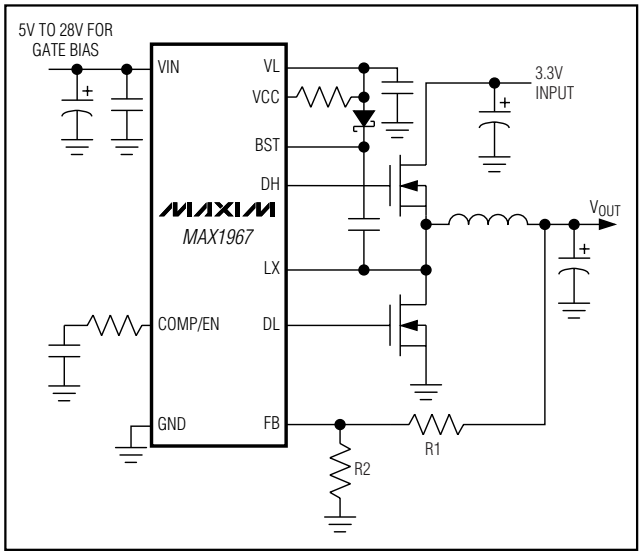

Figure 5. Low Input Voltage Step-Down with Extra Bias Supply for Gate Drive

where C_{RSS} is the reverse transfer capacitance of N1 and I_{GATE} is the peak gate-drive source/sink current (1A typical). For the low-side N-FET (N2), the worst-case power dissipation occurs at maximum input voltage:

$$P_{D(N2)} = \left(1 - \frac{V_{OUT}}{V_{VIN}}\right) \times I_{LOAD}^2 \times R_{DS(ON)}$$

The low-side MOSFET on-resistance sets the MAX1966/MAX1967 current limit. See the *Setting the Current Limit* section for information on selecting low-side MOSFET R_{DSON}. For designs supplying 5A or less, it is often possible to combine the high-side and low-side MOSFETs into a single package (usually an 8-pin SO) as indicated in Table 1. For higher output applications, or those where efficiency is more important, separate FETs are usually preferred.

Very-Low-Voltage Applications

The MAX1966/MAX1967 are extremely versatile controllers that can be used in a variety of applications where high efficiency, high output power, and optimized cost are important. One alternate connection, shown in Figure 5, is useful when a low-voltage supply is to be stepped down to an even lower voltage at high current. If an additional bias supply is available, it can supply gate drive separately from the input power rail. This can either improve efficiency, or allow lower cost 5V logic-level MOSFETs to be used in place of 3V MOSFETs.

Low-Cost Voltage-Mode PWM Step-Down Controllers

Table 1. Component Selection for Standard Applications

DESIGNATION	VIN = 2.7V TO 5.5V VOUT = 1.8V, 3A MAX1966 (FIGURE 3)	VIN = 2.7V TO 5.5V VOUT = 1.8V, 5A MAX1966 (FIGURE 3)
C1	1µF ceramic capacitor	1µF ceramic capacitor
C2	Sanyo MV-WX series, 1000µF, 16V, 23mΩ, 1.82A	Sanyo MV-WX series, 1000µF, 35V, 18mΩ, 2.77A
C3	Sanyo MV-WX series, 1500µF, 6.3V, 23mΩ, 1.82A	Sanyo MV-WX series, 1800µF, 16V, 21mΩ, 2.36A
C4	0.1µF ceramic capacitor	0.1µF ceramic capacitor
C5	0.1µF ceramic capacitor	0.1µF ceramic capacitor
C6	10nF	10nF
C7	0.1µF ceramic capacitor	0.1µF ceramic capacitor
D1	Schottky diode, Central Semiconductor CMPSH-3	Schottky diode, Central Semiconductor CMPSH-3
L1	22µH, 3A, Coilcraft	10µH, 5A, Coilcraft
$N_1 + N_2$ Dual	Fairchild FDS9926A dual 110mΩ or International Rectifier IRF7501 135mΩ	Fairchild FDS9926A dual 20V, 18mΩ, 7.5A
R1	1.25kΩ	1.25kΩ
R2	1kΩ	1kΩ
R3	50kΩ	50kΩ
	VIN = 4.9V TO 14V VOUT = 1.8V, 3A MAX1967 (FIGURE 4)	**VIN = 4.9V TO 24V VOUT = 1.8V, 5A MAX1967 (FIGURE 4)**
C1	1µF ceramic capacitor	1µF ceramic capacitor
C2	220µF 16V, 0.11Ω ESR, 460mA ripple rated, Sanyo MV-GX series	Sanyo MV-WX series, 1000µF, 35V, 18mΩ, 2.77A
C3	470µF 6.3V, 0.11Ω ESR	Sanyo MV-WX series
C4	0.1µF ceramic capacitor	0.1µF ceramic capacitor
C5	0.1µF ceramic capacitor	0.1µF ceramic capacitor
C6	10nF	10µF
C7	2.2µF ceramic	2.2µF ceramic capacitor
D1	Schottky diode, Central Semiconductor CMPSH-3	Schottky diode, Central Semiconductor CMPSH-3
L1	22µH, 3A, Coilcraft	10µH, 5A, Coilcraft
$N_1 + N_2$ Dual	Fairchild FDS9926A 110mΩ, or International Rectifier IRF7501 135mΩ	Fairchild FDS6982, 35mΩ
R1	1.25kΩ	1.25kΩ
R2	1kΩ	1kΩ
R3	50kΩ	50kΩ
R4	10Ω	10Ω

PC Board Layout Guidelines

Careful PC board layout is critical to achieving low switching losses and clean, stable operation. The switching power stage requires particular attention. If possible, mount all the power components on the top side of the board with their ground terminals flush against one another. Follow these guidelines for good PC board layout:

1) Keep the high-current paths short, especially at the ground terminals. This practice is essential for stable, jitter-free operation.
2) Connect the power and analog grounds close to the IC.
3) The IC needs two bypassing ceramic capacitors for input and supply. C1 isolates the IC from current pulses at N1, and should be placed such that the path between C1 and N1 is not shared with the IC. C7 bypasses the IC and should be placed adjacent to the IC.
4) Keep the power traces and load connections short. This practice is essential for high efficiency. Using thick copper PC boards (2oz vs. 1oz) can enhance full-load efficiency by 1% or more. Correctly routing PC board traces is a difficult task that must be approached in terms of fractions of centimeters, where a few milliwatts of excess trace resistance cause a measurable efficiency penalty.
5) LX and GND connections to N2 for current sensing must be made using Kelvin sense connections to guarantee the current-limit accuracy. With 8-pin SO MOSFETs, this is best done by routing power to the MOSFETs from the outside using the top copper layer, while connecting LX and GND inside (underneath) the 8-pin SO package.
6) When tradeoffs in trace lengths must be made, it is preferable to allow the inductor charging current path to be longer than the discharge path. For example, it is better to allow some extra distance between the inductor and the low-side MOSFET or between the inductor and the output filter capacitor.
7) Ensure that the connection between the inductor and C3 is short and direct.
8) Route switching nodes (BST, LX, DH, and DL) away from sensitive analog areas (COMP, FB).
9) Ensure that the C1 ceramic bypass capacitor is immediately adjacent to the pins and as close to the device as possible. Furthermore, the V_{IN} and GND pins of MAX1966/MAX1967 must terminate at the two ends of C1 before connecting to the power switches and C2.

Layout Procedure

1) Place the power components first, with ground terminals adjacent (N2 source, C2, C3). If possible, make all these connections on the top layer with wide, copper-filled areas.
2) Mount the MAX1966/MAX1967 adjacent to MOSFET N2, preferably on the backside opposite N2 in order to keep LX, GND, and the DL gate-drive lines short and wide. The DL gate trace must be short and wide measuring 50mils to 100mils wide if the MOSFET is 1in from the MAX1966/MAX1967.
3) The V_{IN} and GND pins of MAX1966/MAX1967 must terminate at the two ends of C1 before connecting to the power switches and C2. C1's ground connection must be as close to the IC's GND pin as possible.
4) On MAX1966, C7 must be connected to the VIN and GND pins with mimimum distance. On the MAX1967, C7 must be connected to VL and GND pins with minimum distance.
5) Group the gate-drive components (BST diode and C5) together near the controller IC.
6) Make the MAX1966/MAX1967 ground connections to three separate ground planes: the output ground plane, where all the high-power components connect; the power ground plane, where the output bypass capacitor C3 connects; and the analog ground plane, where sensitive analog components connect. The analog ground plane and power ground plane must meet only at a single point directly beneath the IC. These two planes are then connected to the high-power output ground with a short connection for the C3 capacitor to the source of the low-side MOSFET, N2 (the middle of the star ground). This point must also be very close to the output capacitor ground terminal.

Refer to the MAX1966/MAX1967 EV kit manual for a PC board layout example.

Pin Configurations (continued)

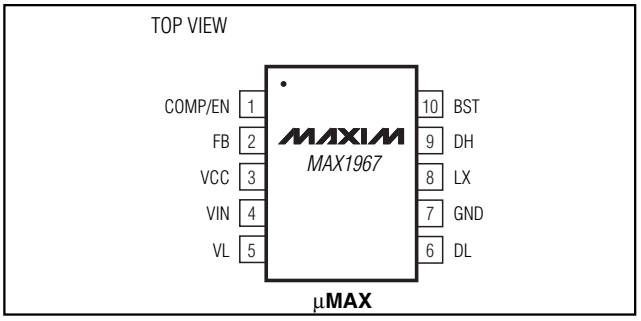

Low-Cost Voltage-Mode PWM Step-Down Controllers

Chip Information

TRANSISTOR COUNT: 3334

PROCESS: BiCMOS

Package Information

(The package drawing(s) in this data sheet may not reflect the most current specifications. For the latest package outline information go to **www.maxim-ic.com/packages**.)

9LUCSP, 3x3.EPS

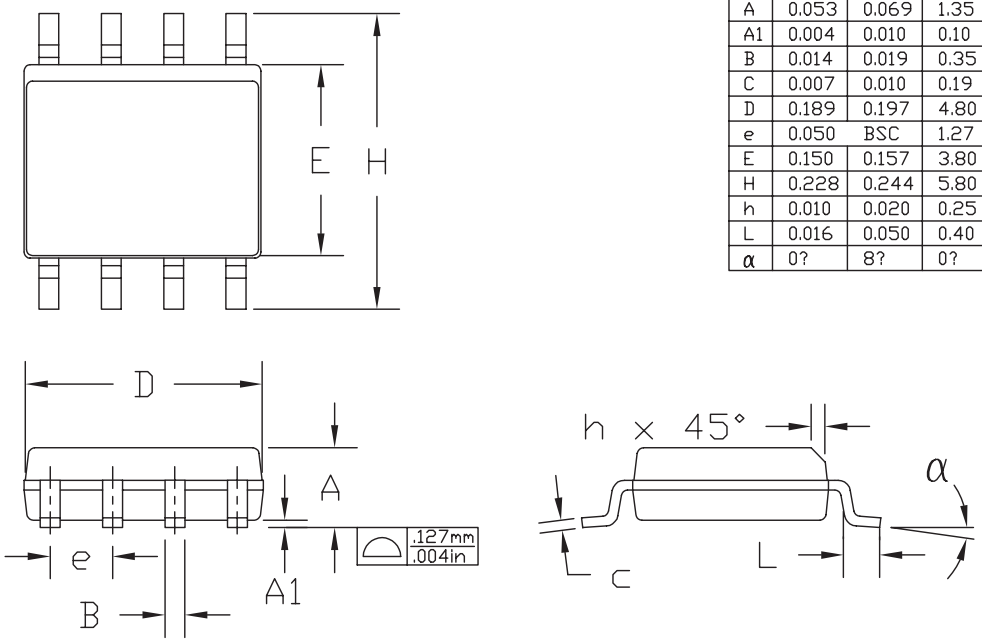

DIM	INCHES MIN	INCHES MAX	MILLIMETERS MIN	MILLIMETERS MAX
A	0.053	0.069	1.35	1.75
A1	0.004	0.010	0.10	0.25
B	0.014	0.019	0.35	0.49
C	0.007	0.010	0.19	0.25
D	0.189	0.197	4.80	5.00
e	0.050	BSC	1.27	BSC
E	0.150	0.157	3.80	4.00
H	0.228	0.244	5.80	6.20
h	0.010	0.020	0.25	0.50
L	0.016	0.050	0.40	1.27
α	0?	8?	0?	8?

NOTES:
1. D&E DO NOT INCLUDE MOLD FLASH.
2. MOLD FLASH OR PROTRUSIONS NOT TO EXCEED .15mm (.006")
3. CONTROLLING DIMENSION: MILLIMETER
4. MEETS JEDEC MS-012 AA.

MAXIM
PROPRIETARY INFORMATION
TITLE 8L SOIC OUTLINE
APPROVAL | DWG 21-0325 | REV A | 1/1

Package Information (continued)

(The package drawing(s) in this data sheet may not reflect the most current specifications. For the latest package outline information go to **www.maxim-ic.com/packages**.)

10LUMAX.EPS

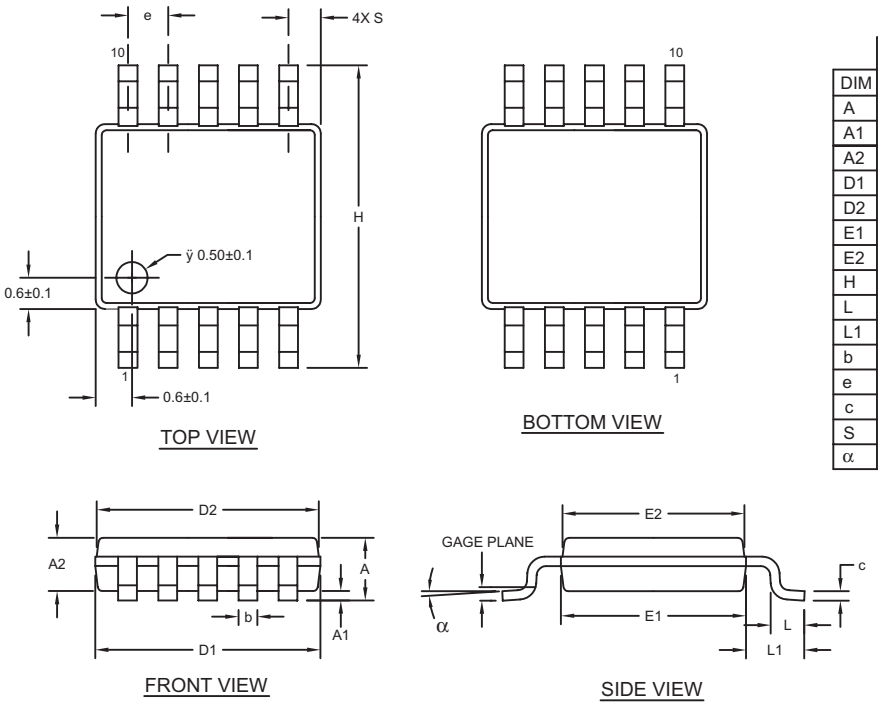

	INCHES		MILLIMETERS	
DIM	MIN	MAX	MIN	MAX
A	-	0.043	-	1.10
A1	0.002	0.006	0.05	0.15
A2	0.030	0.037	0.75	0.95
D1	0.116	0.120	2.95	3.05
D2	0.114	0.118	2.89	3.00
E1	0.116	0.120	2.95	3.05
E2	0.114	0.118	2.89	3.00
H	0.187	0.199	4.75	5.05
L	0.0157	0.0275	0.40	0.70
L1	0.037 REF		0.940 REF	
b	0.007	0.0106	0.177	0.270
e	0.0197 BSC		0.500 BSC	
c	0.0035	0.0078	0.090	0.200
S	0.0196 REF		0.498 REF	
α	0∞	6∞	0∞	6∞

NOTES:
1. D&E DO NOT INCLUDE MOLD FLASH.
2. MOLD FLASH OR PROTRUSIONS NOT TO EXCEED 0.15mm (.006").
3. CONTROLLING DIMENSION: MILLIMETERS.
4. MEETS JEDEC MO-187C-BA.

DALLAS SEMICONDUCTOR MAXIM

PROPRIETARY INFORMATION

TITLE: PACKAGE OUTLINE, 10L uMAX/uSOP

APPROVAL	DOCUMENT CONTROL NO.	REV.	
	21-0061	I	1/1

Maxim cannot assume responsibility for use of any circuitry other than circuitry entirely embodied in a Maxim product. No circuit patent licenses are implied. Maxim reserves the right to change the circuitry and specifications without notice at any time.

© 2003 Maxim Integrated Products Printed USA MAXIM is a registered trademark of Maxim Integrated Products.

Looking for pricing, stock, or lifecycle information?

Click below to explore more details on WIN SOURCE:

- View MAX1967EUB+ on WIN SOURCE
- Maxim Integrated Information

Optimize Your Supply Chain with WIN SOURCE Solutions

- Global Sourcing Solution
- Obsolete Management
- Cost Control Management
- Shortage Management
- Alternative Solution
- Excess Inventory Management