THE DATASHEET OF

MAX6657MSA+

www.win-source.net 0086-755-83957316

19-2034; Rev 5; 10/10

±1°C, SMBus-Compatible Remote/Local Temperature Sensors with Overtemperature Alarms

General Description

The MAX6657/MAX6658/MAX6659 are precise, two-channel digital temperature sensors. Each accurately measures the temperature of its own die and one remote PN junction, and reports the temperature in digital form on a 2-wire serial interface. The remote junction can be a diode-connected transistor like the low-cost NPN type 2N3904 or 2N3906 PNP type. The remote junction can also be a common-collector PNP, such as a substrate PNP of a microprocessor.

The 2-wire serial interface accepts standard System Management Bus (SMBus™) commands such as Write Byte, Read Byte, Send Byte, and Receive Byte to read the temperature data and program the alarm thresholds and conversion rate. The MAX6657/MAX6658/MAX6659 can function autonomously with a programmable conversion rate, which allows the control of supply current and temperature update rate to match system needs. For conversion rates of 4Hz or less, the temperature is represented in extended mode as 10 bits + sign with a resolution of 0.125°C. When the conversion rate is faster than 4Hz, output data is 7 bits + sign with a resolution of 1°C. The MAX6657/MAX6658/MAX6659 also include an SMBus timeout feature to enhance system reliability.

Remote accuracy is ±1°C between +60°C and +100°C with no calibration needed. The MAX6657 measures temperatures from 0°C to +125°C and the MAX6658/MAX6659 from -55°C to +125°C. The MAX6659 has the added benefit of being able to select one of three addresses through an address pin, and a second overtemperature alarm pin for greater system reliability.

Applications

Desktop Computers
Workstations
Notebook Computers
Servers

Typical Operating Circuit appears at the end of the data sheet.

SMBus is a trademark of Intel Corp.

Features

- **Dual Channel Measures Remote and Local Temperature**
- **11-Bit, +0.125°C Resolution**
- **High Accuracy ±1°C (max) from +60°C to +100°C (Remote)**
- **No Calibration Required**
- **Programmable Under/Overtemperature Alarms**
- **Programmable Conversion Rate (0.0625Hz to 16Hz)**
- **SMBus/I²C-Compatible Interface**
- **Two Alarm Outputs: $\overline{\text{ALERT}}$ and $\overline{\text{OVERT1}}$ (MAX6657 and MAX6658)**
- **Three Alarm Outputs: $\overline{\text{ALERT}}$, $\overline{\text{OVERT1}}$, and $\overline{\text{OVERT2}}$ (MAX6659)**
- **Compatible with 65nm Process Technology (Y Versions)**

Ordering Information

PART	MEASURED TEMP RANGE	PIN-PACKAGE
MAX6657MSA	0°C to +125°C	8 SO
MAX6657MSA+	0°C to +125°C	8 SO
MAX6657MSA-T	0°C to +125°C	8 SO
MAX6657MSA+T	0°C to +125°C	8 SO
MAX6657YMSA+	0°C to +125°C	8 SO
MAX6657YMSA+T	0°C to +125°C	8 SO

Note: *All devices are specified over the -55°C to +125°C operating temperature range.*

+Denotes a lead(Pb)-free/RoHS-compliant package.

T = Tape and reel.

Ordering Information continued at end of data sheet.

Pin Configurations

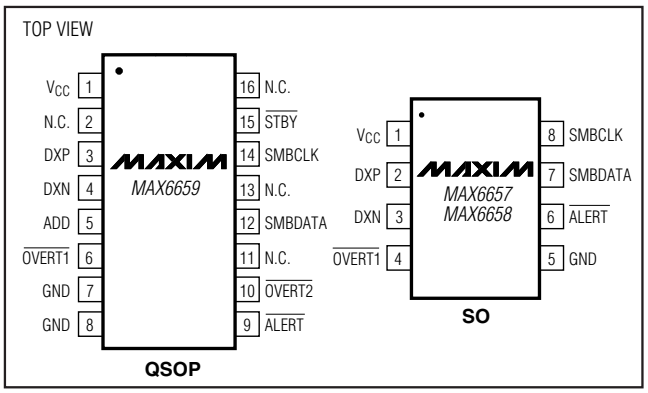

For pricing, delivery, and ordering information, please contact Maxim Direct at 1-888-629-4642, or visit Maxim's website at www.maxim-ic.com.

±1°C, SMBus-Compatible Remote/Local Temperature Sensors with Overtemperature Alarms

ABSOLUTE MAXIMUM RATINGS

(All voltages referenced to GND.)

V_{CC} .....-0.3V to +6V
DXP .....-0.3V to (V_{CC} + 0.3V)
DXN .....-0.3V to +0.8V
SMBCLK, SMBDATA, $\overline{\text{ALERT}}$, $\overline{\text{OVERT1}}$, $\overline{\text{OVERT2}}$ .....-0.3V to +6V
SMBDATA, $\overline{\text{ALERT}}$, $\overline{\text{OVERT1}}$, $\overline{\text{OVERT2}}$ Current .....-1mA to +50mA
DXN Current .....±1mA

Continuous Power Dissipation (T_A = +70°C)
8-Pin SO (derate 5.9mW/°C above +70°C) 471mW
16-Pin QSOP (derate 8.3mW/°C above +70°C) 664mW
Junction Temperature .....+150°C
Storage Temperature Range .....-65°C to +150°C
Lead Temperature (soldering, 10s) .....+300°C
Soldering Temperature (reflow)
Lead(Pb)-free .....+260°C
Containing lead(Pb) .....+240°C

Stresses beyond those listed under "Absolute Maximum Ratings" may cause permanent damage to the device. These are stress ratings only, and functional operation of the device at these or any other conditions beyond those indicated in the operational sections of the specifications is not implied. Exposure to absolute maximum rating conditions for extended periods may affect device reliability.

ELECTRICAL CHARACTERISTICS

(V_{CC} = +3.0V to +5.5V, T_A = 0°C to +125°C, unless otherwise specified. Typical values are at V_{CC} = +3.3V and T_A = +25°C.)

PARAMETER	SYMBOL	CONDITIONS	MIN	TYP	MAX	UNITS
Temperature Resolution, Legacy Mode			1			°C
				8		Bits
Temperature Resolution, Extended Mode			0.125			°C
				11		Bits
Remote Temperature Error (MAX6657, MAX6657Y)		T_{RJ} = +60°C to +100°C, V_{CC} = +3.3V (Note 1)	-1.0		+1.0	°C
		T_{RJ} = 0°C to +100°C, V_{CC} = +3.3V (Note 1)	-3.0		+3.0	
		T_{RJ} = 0°C to +125°C, V_{CC} = +3.3V (Note 1)	-5.0		+5.0	
Local Temperature Error (MAX6657)		T_A = +60°C to +100°C, V_{CC} = +3.3V	-2.0		+2.0	°C
		T_A = 0°C to +100°C, V_{CC} = +3.3V	-3.0		+3.0	
		T_A = 0°C to +125°C, V_{CC} = +3.3V	-5.0		+5.0	
Remote Temperature Error (MAX6658/MAX6659/ MAX6658Y/MAX6659Y)		T_{RJ} = +60°C to +100°C, V_{CC} = +3.3V (Note 1)	-1.0		1.0	°C
		T_{RJ} = 0°C to +100°C, V_{CC} = +3.3V (Note 1)	-3.0		3.0	
		T_{RJ} = -55°C to +125°C, V_{CC} = +3.3V (Note 1)	-5.0		+5.0	
Local Temperature Error (MAX6658/MAX6659)		T_A = +60°C to +100°C, V_{CC} = +3.3V	-2.0		+2.0	°C
		T_A = 0°C to +100°C, V_{CC} = +3.3V	-3.0		+3.0	
		T_A = -55°C to +125°C, V_{CC} = +3.3V (Note 2)	-5.0		+5.0	
Local Temperature Error (MAX665_Y)		T_A = +60°C to +100°C, V_{CC} = +3.3V		-3.8		°C
		T_A = 0°C to +100°C, V_{CC} = +3.3V		-4.0		
		T_A = 0°C to +125°C, V_{CC} = +3.3V		-4.4		
Line Regulation		3.0V ≤ V_{CC} ≤ 5.5V		0.2	0.6	m°C/V
Supply Voltage Range	V_{CC}		3.0		5.5	V
Undervoltage Lockout Threshold	UVLO	Falling edge of V_{CC} disables ADC	2.60	2.80	2.95	V
Undervoltage Lockout Hysteresis				90		mV
Power-On Reset (POR) Threshold		V_{CC}, falling edge	1.5	2.0	2.5	V
POR Threshold Hysteresis				90		mV
Standby Supply Current		SMBus static		3	10	µA
Operating Current		During conversion		0.5	1.0	mA

ELECTRICAL CHARACTERISTICS (continued)

(V_{CC} = +3.0V to +5.5V, T_A = 0°C to +125°C, unless otherwise specified. Typical values are at V_{CC} = +3.3V and T_A = +25°C.)

PARAMETER	SYMBOL	CONDITIONS	MIN	TYP	MAX	UNITS
Average Operating Current		0.25 conversions/s		40	70	µA
		2 conversions/s		150	250	
Conversion Time	t_{CONV}	From stop bit to conversion completed (Note 4)	95	125	156	ms
Conversion Timing Error					±25	%
DXP and DXN Leakage Current		In standby mode			100	nA
Remote-Diode Source Current	I_{RJ}	High level	80	100	120	µA
		Low level	8	10	12	
($\overline{ALERT}$, $\overline{OVERT}$)						
Output Low Sink Current		V_{OL} = 0.4V	1			mA
		V_{OL} = 0.6V	6			
Output High Leakage Current		V_{OH} = 5.5V			1	µA
SMBus-COMPATIBLE INTERFACE (SMBCLK, SMBDATA, $\overline{STBY}$)						
Logic Input Low Voltage	V_{IL}				0.8	V
Logic Input High Voltage	V_{IH}	V_{CC} = +3.0V	2.2			V
		V_{CC} = +5.5V	2.4			
Input Leakage Current	I_{LEAK}	V_{IN} = V_{GND} or V_{CC}			±1	µA
Output Low Sink Current	I_{OL}	V_{OL} = 0.6V	6			mA
Input Capacitance	C_{IN}			5		pF
SMBus-COMPATIBLE TIMING (Note 4)						
Serial-Clock Frequency	f_{SCL}	(Note 5)			100	kHz
Bus Free Time Between STOP and START Condition	t_{BUF}		4.7			µs
START Condition Setup Time			4.7			µs
Repeat START Condition Setup Time	$t_{SU:STA}$	90% to 90%	50			ns
START Condition Hold Time	$t_{HD:STA}$	10% of SMBDATA to 90% of SMBCLK	4			µs
STOP Condition Setup Time	$t_{SU:STO}$	90% of SMBCLK to 90% of SMBDATA	4			µs
Clock Low Period	t_{LOW}	10% to 10%	4.7			µs
Clock High Period	t_{HIGH}	90% to 90%	4			µs
Data Setup Time	$t_{HD:DAT}$	(Note 6)	0			µs
Receive SCL/SDA Rise Time	t_R				1	µs
Receive SCL/SDA Fall Time	t_F				300	ns
Pulse Width of Spike Suppressed	t_{SP}		0		50	ns
SMBus Timeout		SMBDATA low period for interface reset	25	37	45	ms

Note 1: T_A = +25°C to +85°C.
Note 2: If both the local and the remote junction are below T_A = -20°C, then V_{CC} > 3.15V.
Note 3: For conversion rates of 4Hz or slower, the conversion time doubles.
Note 4: Timing specifications guaranteed by design.
Note 5: The serial interface resets when SMBCLK is low for more than $t_{TIMEOUT}$.
Note 6: A transition must internally provide at least a hold time to bridge the undefined region (300ns max) of SMBCLK's falling edge.

±1°C, SMBus-Compatible Remote/Local Temperature Sensors with Overtemperature Alarms

Typical Operating Characteristics

(V_{CC} = +3.3V, T_A = +25°C, unless otherwise noted.)

STANDBY SUPPLY CURRENT vs. SUPPLY VOLTAGE

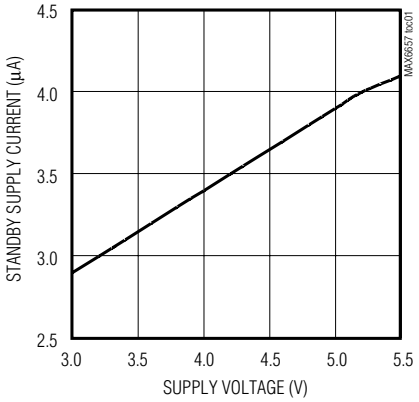

OPERATING SUPPLY CURRENT vs. CONVERSION RATE

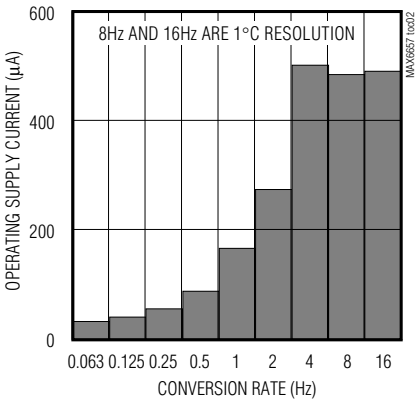

MAX6659 REMOTE TEMPERATURE ERROR vs. REMOTE-DIODE TEMPERATURE

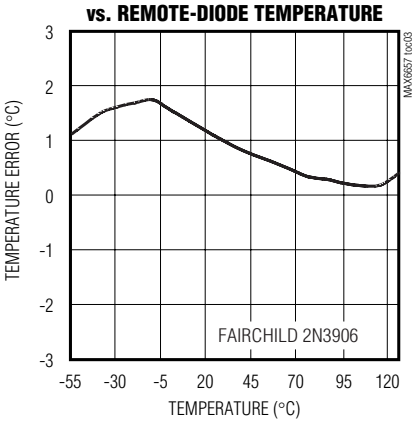

LOCAL TEMPERATURE ERROR vs. DIE TEMPERATURE

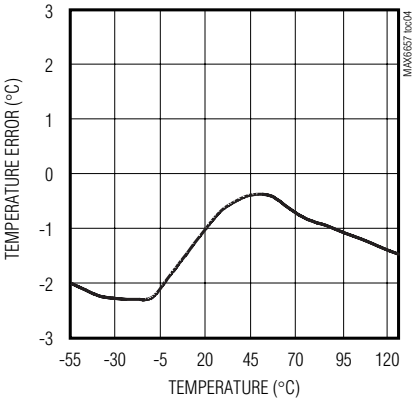

TEMPERATURE ERROR vs. POWER-SUPPLY NOISE FREQUENCY

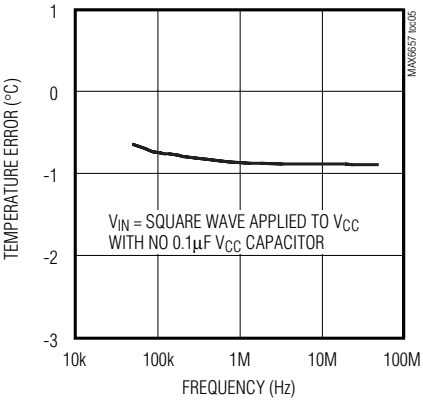

TEMPERATURE ERROR vs. COMMON-MODE NOISE FREQUENCY

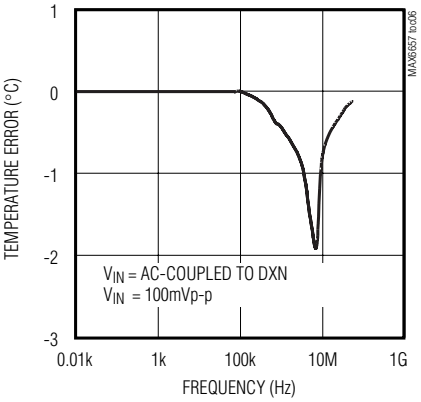

TEMPERATURE ERROR vs. DIFFERENTIAL-MODE NOISE FREQUENCY

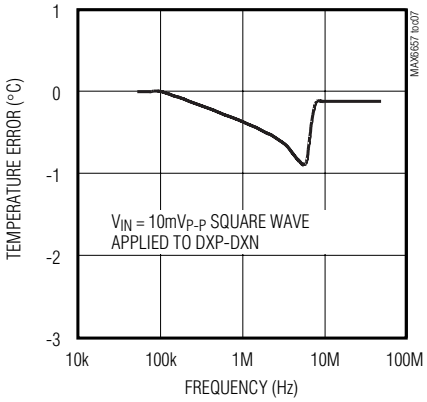

TEMPERATURE ERROR vs. DXP-DXN CAPACITANCE

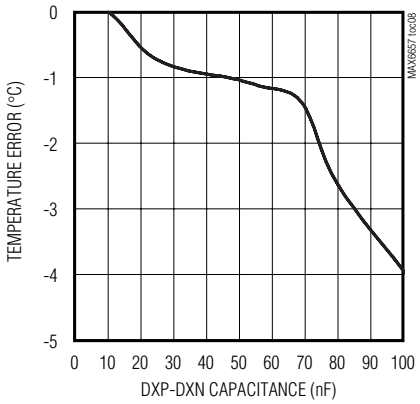

Pin Description

PIN		NAME	FUNCTION
MAX6657 MAX6658	MAX6659		
1	1	V_{CC}	Supply Voltage Input, +3V to +5.5V. Bypass to GND with a 0.1µF capacitor. A 200Ω series resistor is recommended but not required for additional noise filtering. See *Typical Operating Circuit*.
2	3	DXP	Combined Remote-Diode Current Source and A/D Positive Input for Remote-Diode Channel. **DO NOT LEAVE DXP UNCONNECTED**; connect DXP to DXN if no remote diode is used. Place a 2200pF capacitor between DXP and DXN for noise filtering.
3	4	DXN	Combined Remote-Diode Current Sink and A/D Negative Input. DXN is internally biased to one diode drop above ground.
4	6	$\overline{\text{OVERT1}}$	Overtemperature Active-Low Output, Open-Drain. Output is logic low only when temperature is above the software programmed threshold.
5	7, 8	GND	Ground
6	9	$\overline{\text{ALERT}}$	SMBus Alert (Interrupt) Active-Low Output, Open-Drain. Asserts when temperature exceeds user-set limits (high or low temperature). Stays asserted until acknowledged by either reading the Status register or by successfully responding to an Alert Response address. See *$\overline{\text{ALERT}}$ Interrupts*.
7	12	SMBDATA	SMBus Serial-Data Input/Output, Open-Drain
8	14	SMBCLK	SMBus Serial-Clock Input
—	5	ADD	SMBus Address-Select Pin. The MAX6659 is set to one of three available addresses (connect to V_{CC}, GND, or leave open). See *Slave Addresses* section.
—	10	$\overline{\text{OVERT2}}$	Overtemperature Active-Low Output, Open-Drain. Output is logic low only when temperature is above the software programmed threshold.
—	15	$\overline{\text{STBY}}$	Hardware Standby Input. Temperature and comparison threshold data are retained in standby mode. If $\overline{\text{STBY}}$ is low, the IC is put into standby mode.
—	2, 11, 13, 16	N.C.	Not internally connected. Do not make connections to these pins.

±1°C, SMBus-Compatible Remote/Local Temperature Sensors with Overtemperature Alarms

Functional Diagram

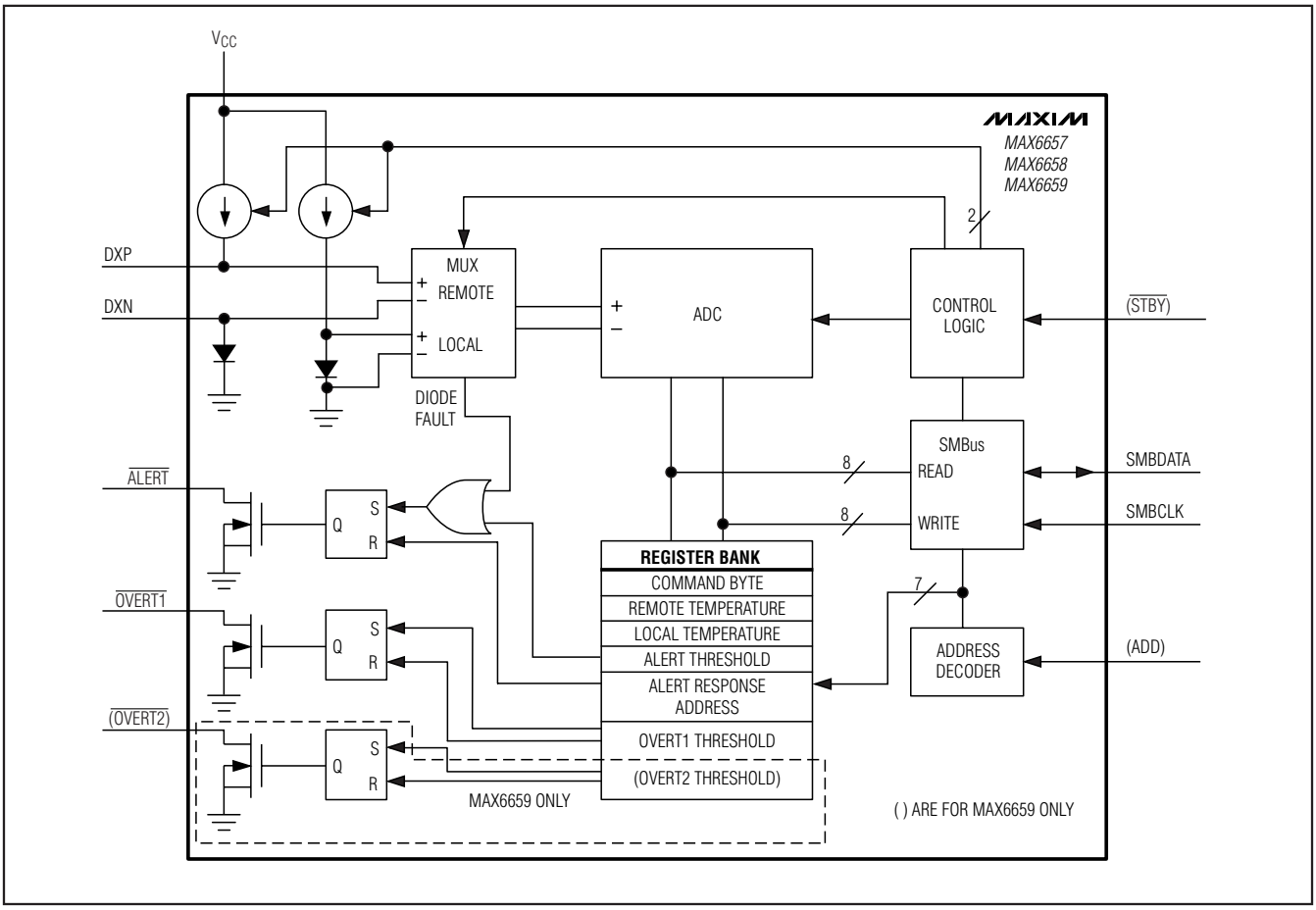

Detailed Description

The MAX6657/MAX6658/MAX6659 are temperature sensors designed to work in conjunction with a microprocessor or other intelligence in thermostatic, process-control, or monitoring applications. Communication with the MAX6657/MAX6658/MAX6659 occurs through the SMBus serial interface and dedicated alert pins. Two independent overtemperature alarms ($\overline{\text{OVERT1}}$ and $\overline{\text{OVERT2}}$) are asserted if their software programmed temperature thresholds are exceeded. $\overline{\text{OVERT1}}$ and $\overline{\text{OVERT2}}$ can be connected to fans, a system shutdown, or other thermal management circuitry.

The MAX6657/MAX6658/MAX6659 convert temperatures to digital data either at a programmed rate or a single conversion. Conversions have a 0.125°C resolution (extended resolution) or 1°C resolution (legacy resolution). Extended resolution represents temperature as 10 bits + sign bit and is available for autonomous conversions that are 4Hz and slower and single-shot conversions. Legacy resolution represents temperature as 7 bits + sign bit and allows for faster autonomous conversion rates of 8Hz and 16Hz.

ADC and Multiplexer

The averaging ADC integrates over a 60ms period (each channel, typically, in the 7-bit + sign legacy mode). Using an averaging ADC attains excellent noise rejection.

The multiplexer automatically steers bias currents through the remote and local diodes. The ADC and associated circuitry measure each diode's forward voltage and compute the temperature based on this voltage. If the remote channel is not used, connect DXP to DXN. Do not leave DXP and DXN unconnected. When a conversion is initiated, both channels are converted

Table 1. Remote-Sensor Transistor

MANUFACTURER	MODEL NUMBER
Central Semiconductor (USA)	CMPT3904
Fairchild Semiconductor (USA)	2N3904, 2N3906
On Semiconductor (USA)	2N3904, 2N3906
Rohm Semiconductor (USA)	SST3904
Samsung (Korea)	KST3904-TF
Siemens (Germany)	SMBT3904
Zetex (England)	FMMT3904CT-ND

Note: *Transistors must be diode connected (base shorted to collector).*

whether they are used or not. The DXN input is biased at one V_{BE} above ground by an internal diode to set up the ADC inputs for a differential measurement. Resistance in series with the remote diode causes about +1/2°C error per ohm.

A/D Conversion Sequence

A conversion sequence consists of a local temperature measurement and a remote temperature measurement. Each time a conversion begins, whether initiated automatically in the free-running autoconvert mode (RUN/STOP = 0) or by writing a "one-shot" command, both channels are converted, and the results of both measurements are available after the end of conversion. A BUSY status bit in the Status register shows that the device is actually performing a new conversion. The results of the previous conversion sequence are still available when the ADC is busy.

Remote-Diode Selection

The MAX6657/MAX6658/MAX6659 can directly measure the die temperature of CPUs and other ICs that have on-board temperature-sensing diodes (see *Typical Operating Circuit*) or they can measure the temperature of a discrete diode-connected transistor. The type of remote diode used is set by bit 5 of the Configuration Byte. If bit 5 is set to zero, the remote sensor is a diode-connected transistor, and if bit 5 is set to 1, the remote sensor is a substrate or common collector PNP transistor. For best accuracy, the discrete transistor should be a small-signal device with its collector and base connected together. Accuracy has been experimentally verified for all the devices listed in Table 1.

The transistor must be a small-signal type with a relatively high forward voltage; otherwise, the A/D input voltage range can be violated. The forward voltage at the highest expected temperature must be greater than 0.25V at 10µA, and at the lowest expected temperature, forward voltage must be less than 0.95V at 100µA. Large power transistors must not be used. Also, ensure that the base resistance is less than 100Ω. Tight specifications for forward current gain ($50 < \beta < 150$, for example) indicate that the manufacturer has good process controls and that the devices have consistent V_{BE} characteristics.

Thermal Mass and Self-Heating

When sensing local temperature, these devices are intended to measure the temperature of the PC board to which they are soldered. The leads provide a good thermal path between the PC board traces and the die. Thermal conductivity between the die and the ambient air is poor by comparison, making air temperature measurements impractical. Because the thermal mass of the PC board is far greater than that of the MAX6657/MAX6658/MAX6659, the devices follow temperature changes on the PC board with little or no perceivable delay.

When measuring the temperature of a CPU or other IC with an on-chip sense junction, thermal mass has virtually no effect; the measured temperature of the junction tracks the actual temperature within a conversion cycle. When measuring temperature with discrete remote sensors, smaller packages (i.e., a SOT23) yield the best thermal response times. Take care to account for thermal gradients between the heat source and the sensor, and ensure that stray air currents across the sensor package do not interfere with measurement accuracy.

Self-heating does not significantly affect measurement accuracy. Remote-sensor self-heating due to the diode current source is negligible. For the local diode, the worst-case error occurs when autoconverting at the fastest rate and simultaneously sinking maximum current at the $\overline{ALERT}$ output. For example, with V_{CC} = +5.0V, a 16Hz conversion rate and $\overline{ALERT}$ sinking 1mA, the typical power dissipation is:

$$V_{CC} \times 450\mu A + 0.4V \times 1mA = 2.65mW$$

θ_{J-A} for the 8-pin SO package is about +170°C/W, so assuming no copper PC board heat sinking, the resulting temperature rise is:

$$\Delta T = 2.65mW \times +170°C/W = +0.45°C$$

Even under these engineered circumstances, it is difficult to introduce significant self-heating errors.

ADC Noise Filtering

The integrating ADC used has good noise rejection for low-frequency signals such as 60Hz/120Hz power-supply hum. In noisy environments, high-frequency noise reduction is needed for high-accuracy remote mea-

surements. The noise can be reduced with careful PC board layout and proper external noise filtering.

High-frequency EMI is best filtered at DXP and DXN with an external 2200pF capacitor. Larger capacitor values can be used for added filtering, but do not exceed 3300pF because it can introduce errors due to the rise time of the switched current source.

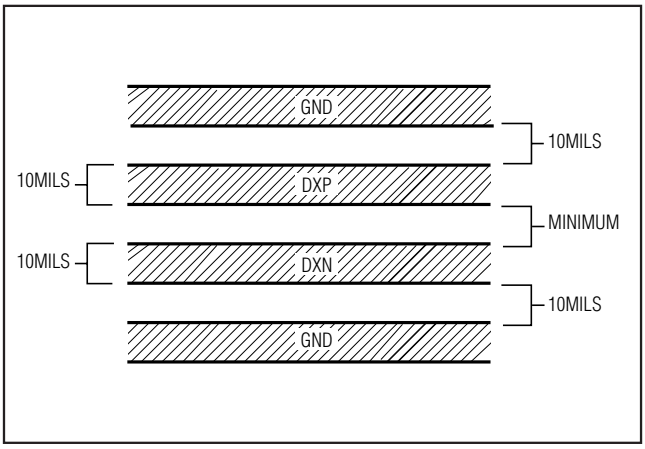

Figure 1. Recommended DXP-DXN PC Traces

PC Board Layout

Follow these guidelines to reduce the measurement error of the temperature sensors:

1) Place the MAX6657/MAX6658/MAX6659 as close as is practical to the remote diode. In noisy environments, such as a computer motherboard, this distance can be 4in to 8in (typ). This length can be increased if the worst noise sources are avoided. Noise sources include CRTs, clock generators, memory buses, and ISA/PCI buses.
2) Do not route the DXP-DXN lines next to the deflection coils of a CRT. Also, do not route the traces across fast digital signals, which can easily introduce +30°C error, even with good filtering.
3) Route the DXP and DXN traces in parallel and in close proximity to each other, away from any higher voltage traces, such as +12VDC. Leakage currents from PC board contamination must be dealt with carefully since a 20MΩ leakage path from DXP to ground causes about +1°C error. If high-voltage traces are unavoidable, connect guard traces to GND on either side of the DXP-DXN traces (Figure 1).
4) Route through as few vias and crossunders as possible to minimize copper/solder thermocouple effects.
5) When introducing a thermocouple, make sure that both the DXP and the DXN paths have matching thermocouples. A copper-solder thermocouple exhibits 3µV/°C, and it takes about 200µV of voltage error at DXP-DXN to cause a +1°C measurement error. Adding a few thermocouples causes a negligible error.
6) Use wide traces. Narrow traces are more inductive and tend to pick up radiated noise. The 10mil widths and spacings that are recommended in Figure 1 are not absolutely necessary, as they offer only a minor improvement in leakage and noise over narrow traces. Use wider traces when practical.
7) Add a 200Ω resistor in series with V_{CC} for best noise filtering (see *Typical Operating Circuit*).

Twisted-Pair and Shielded Cables

Use a twisted-pair cable to connect the remote sensor for remote-sensor distances longer than 8in or in very noisy environments. Twisted-pair cable lengths can be between 6ft and 12ft before noise introduces excessive errors. For longer distances, the best solution is a shielded twisted pair like that used for audio microphones. For example, Belden #8451 works well for distances up to 100ft in a noisy environment. At the device, connect the twisted pair to DXP and DXN and the shield to GND. Leave the shield unconnected at the remote sensor.

For very long cable runs, the cable's parasitic capacitance often provides noise filtering, so the 2200pF capacitor can often be removed or reduced in value. Cable resistance also affects remote-sensor accuracy. For every 1Ω of series resistance, the error is approximately +1/2°C.

Low-Power Standby Mode

Standby mode reduces the supply current to less than 10µA by disabling the ADC. Enter hardware standby (MAX6659 only) by forcing the $\overline{STBY}$ pin low, or enter software standby by setting the RUN/STOP bit to 1 in the Configuration Byte register. Hardware and software standbys are very similar—all data is retained in memory, and the SMB interface is alive and listening for SMBus commands. The only difference is that in software standby mode, the one-shot command initiates a conversion. With hardware standby, the one-shot command is ignored. Activity on the SMBus causes the device to draw extra supply current.

Driving the $\overline{STBY}$ pin low overrides any software conversion command. If a hardware or software standby command is received while a conversion is in progress, the conversion cycle is interrupted, and the tempera-

ture registers are not updated. The previous data is not changed and remains available.

SMBus Digital Interface

From a software perspective, each of the MAX6657/MAX6658/MAX6659 appears as a series of 8-bit registers that contain temperature data, alarm threshold values, and control bits. A standard SMBus-compatible 2-wire serial interface is used to read Temperature Data and Write Control bits and alarm threshold data. The device responds to the same SMBus slave address for access to all functions.

The MAX6657/MAX6658/MAX6659 employ four standard SMBus protocols: Write Byte, Read Byte, Send Byte, and Receive Byte (Figures 2, 3, and 4). The shorter Receive Byte protocol allows quicker transfers, provided that the correct data register was previously selected by a Read Byte instruction. Use caution with the shorter protocols in multimaster systems, since a second master could overwrite the command byte without informing the first master.

When the conversion rate is greater than 4Hz, temperature data can be read from the Read Internal Temperature (00h) and Read External Temperature (01h) registers. The temperature data format is 7 bits + sign in two's-complement form for each channel, with the LSB representing 1°C (Table 2). The MSB is transmitted first.

When the conversion rate is 4Hz or less, the first 8 bits of temperature data can be read from the Read Internal Temperature (00h) and Read External Temperature (01h) registers, the same as for faster conversion rates. An additional 3 bits can be read from the Read External Extended Temperature (10h) and Read Internal Extended Temperature (11h) registers, which extends the data to 10 bits + sign and the resolution to +0.125°C per LSB (Table 3).

When a conversion is complete, the Main register and the Extended register are updated almost simultaneously. Ensure that no conversions are completed between reading the Main and Extended registers so that when data that is read, both registers contain the result of the same conversion.

To ensure valid extended data, read extended resolution temperature data using one of the following approaches:

1) Put the MAX6657/MAX6658/MAX6659 into standby mode by setting bit 6 of the Configuration register to

Write Byte Format

S	ADDRESS	WR	ACK	COMMAND	ACK	DATA	ACK	P
	7 bits			8 bits		8 bits		1

Slave Address: equivalent to chip-select line of a 3-wire interface

Command Byte: selects which register you are writing to

Data Byte: data goes into the register set by the command byte (to set thresholds, configuration masks, and sampling rate)

Read Byte Format

ADDRESS	WR	ACK	COMMAND	ACK	S	ADDRESS	RD	ACK	DATA	///	P
7 bits			8 bits			7 bits			8 bits		

Slave Address: equivalent to chip-select line

Command Byte: selects which register you are reading from

Slave Address: repeated due to change in data-flow direction

Data Byte: reads from the register set by the command byte

Send Byte Format

ADDRESS	WR	ACK	COMMAND	ACK	P
7 bits			8 bits		

Command Byte: sends command with no data, usually used for one-shot command

Receive Byte Format

S	ADDRESS	RD	ACK	DATA	///	P
	7 bits			8 bits		

Data Byte: reads data from the register commanded by the last Read Byte or Write Byte transmission; also used for SMBus Alert Response return address

S = Start condition *Shaded = Slave transmission*
P = Stop condition */// = Not acknowledged*

Figure 2. SMBus Protocols

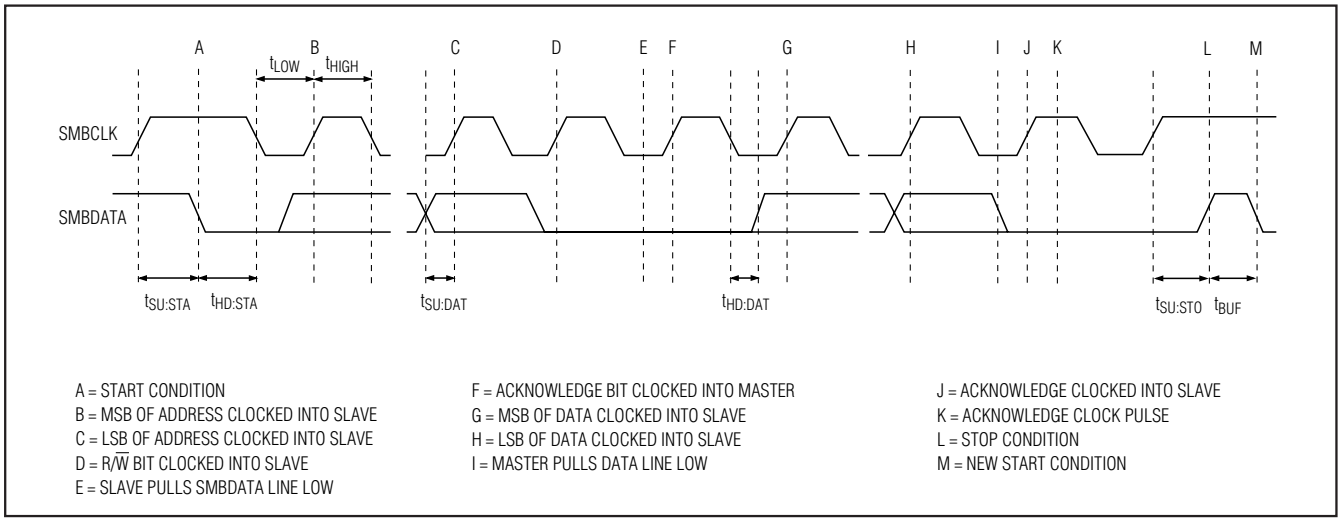

Figure 3. SMBus Write Timing Diagram

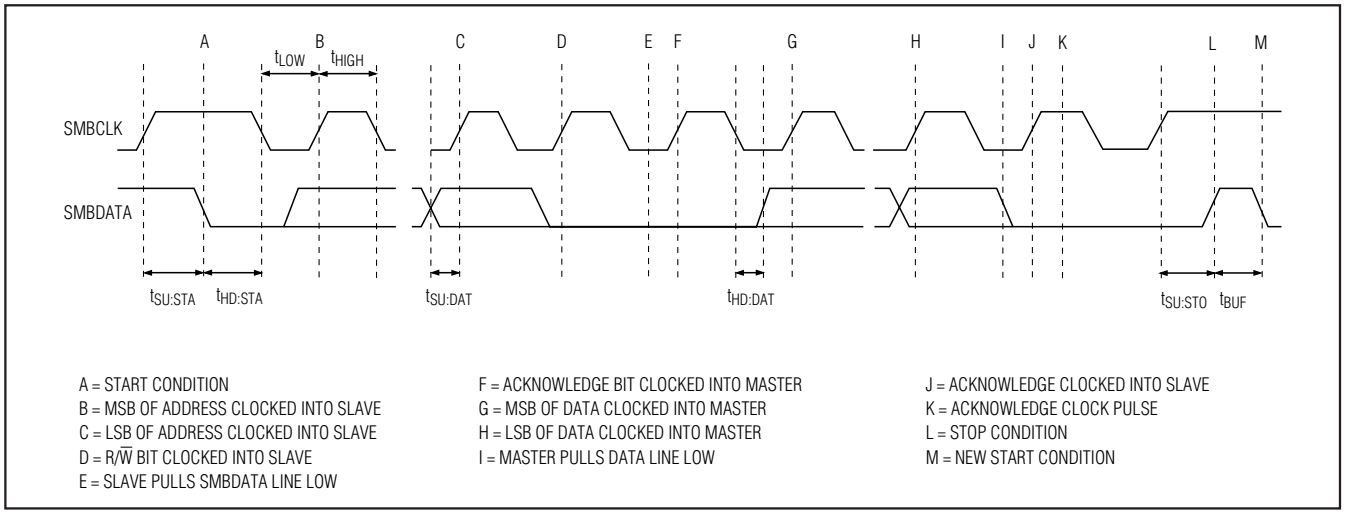

Figure 4. SMBus Read Timing Diagram

1. Initiate a one-shot conversion using Command Byte 0Fh. When this conversion is complete, read the contents of the Temperature Data registers.

2) If the MAX6657/MAX6658/MAX6659 are in run mode, read the Status register. If a conversion is in progress, the BUSY bit is set to 1. Wait for the conversion to complete as indicated by the BUSY bit being set to 0, then read the Temperature Data registers. Note that the power-on reset sets the conversion rate to 16Hz, so no extended data is valid without reducing the conversion rate to 4Hz or less.

Diode Fault Alarm

There is a continuity fault detector at DXP that detects an open circuit between DXP and DXN, or a DXP short to V_{CC}, GND, or DXN. If an open or short circuit exists, the external temperature register is loaded with 1000 0000. Additionally, if the fault is an open circuit, bit 2 (OPEN) of the status byte is set to 1 and the ALERT condition is activated at the end of the conversion. Immediately after POR, the Status register indicates that no fault is present until the end of the first conversion.

Table 2. Data Format (Two's Complement)

TEMP (°C)	DIGITAL OUTPUT	
	MAX6657	MAX6658 MAX6659
130.00	0 111 1111	0 111 1111
127.00	0 111 1111	0 111 1111
126.00	0 111 1111	0 111 1111
25	0 001 1001	0 001 1001
0.00	0 000 0000	0 000 0000
-1	1 000 0000	1 111 1111
-25	1 000 0000	1 110 0111
-55	1 000 0000	1 100 1001
Diode Fault (Short or Open)	1 000 0000	1 000 0000

Alarm Threshold Registers

Four registers store $\overline{\text{ALERT}}$ threshold values—one high-temperature (T_{HIGH}) and one low-temperature (T_{LOW}) register each for the local and remote channels. If either measured temperature equals or exceeds the corresponding $\overline{\text{ALERT}}$ threshold value, the $\overline{\text{ALERT}}$ output is asserted.

The POR state of both $\overline{\text{ALERT}}$ T_{HIGH} registers is 0100 0110 or +70°C and the POR state of T_{LOW} registers is 1100 1001 or -55°C.

Four additional registers store remote and local alarm threshold data corresponding to the $\overline{\text{OVERT1}}$ and $\overline{\text{OVERT2}}$ (MAX6659 only) outputs. The values stored in these registers are high-temperature thresholds. If any one of the measured temperatures equals or exceeds the corresponding alarm threshold value, an $\overline{\text{OVERT}}$ output is asserted. The POR state of the $\overline{\text{OVERT}}$ threshold is 0101 0101 or +85°C.

$\overline{\text{Alert}}$ Interrupts

An $\overline{\text{ALERT}}$ interrupt occurs when the internal or external temperature reading exceeds a high or low temperature limit (user programmed) or when the remote diode is disconnected (for continuity fault detection). The $\overline{\text{ALERT}}$ interrupt output signal is latched and can be cleared only by either reading the Status register or by successfully responding to an Alert Response address. In both cases, the alert is cleared even if the fault condition still exists, but is reasserted at the end of the next conversion. The interrupt does not halt automatic conversions. The interrupt output pin is open-drain so that multiple devices can share a common interrupt line. The interrupt rate never exceeds the conversion rate.

Table 3. Extended Resolution Register

FRACTIONAL TEMPERATURE	CONTENTS OF EXTENDED REGISTER
0.000	000X XXXX
0.125	001X XXXX
0.250	010X XXXX
0.375	011X XXXX
0.500	100X XXXX
0.625	101X XXXX
0.750	110X XXXX
0.875	111X XXXX

Note: *Extended resolution applies only for conversion rates of 4Hz and slower.*

Alert Response Address

The SMBus Alert Response interrupt pointer provides quick fault identification for simple slave devices that lack the complex, expensive logic needed to be a bus master. Upon receiving an ALERT interrupt signal, the host master can broadcast a Receive Byte transmission to the Alert Response slave address (0001100). Then, any slave device that generated an interrupt attempts to identify itself by putting its own address on the bus (Table 8).

The Alert Response can activate several different slave devices simultaneously, similar to the I²C General Call. If more than one slave attempts to respond, bus arbitration rules apply, and the device with the lower address code wins. The losing device does not generate an acknowledge and continues to hold the $\overline{\text{ALERT}}$ line low until cleared. (The conditions for clearing an alert vary, depending on the type of slave device.) Successful completion of the Alert Response protocol clears the interrupt latch, provided the condition that caused the alert no longer exists. If the condition still exists, the device reasserts the ALERT interrupt at the end of the next conversion.

$\overline{\text{OVERT}}$ Overtemperature Alarm/Warning Outputs

$\overline{\text{OVERT1}}$ and $\overline{\text{OVERT2}}$ (MAX6659 only) are asserted when the temperature rises to a value programmed in the appropriate threshold register. They are deasserted when the temperature drops below this threshold minus the hysteresis. An OVERT output can be used to activate a cooling fan, send a warning, or trigger a system shutdown to prevent component damage. The HYST byte sets the amount of hysteresis for both OVERT outputs. The data format for the HYST byte is the same for the other temperature registers (Table 2).

Table 4. Command Byte Register Assignments

REGISTER	ADDRESS	POR STATE	FUNCTION
RLTS	00h	0000 0000	Read Internal Temperature
RRTE	01h	0000 0000	Read External Temperature
RSL	02h	1000 0000	Read Status Register
RCL	03h	0010 0000	Read Configuration Byte
RCRA	04h	0000 1000	Read Conversion Rate Byte
RLHN	05h	0100 0110	Read Internal High Limit
RLLI	06h	1100 1001	Read Internal Low Limit
RRHI	07h	0100 0110	Read External High Limit
RRLS	08h	1100 1001	Read External Low Limit
WCA	09h	0010 0000	Write Configuration Byte
WCRW	0Ah	0000 1000	Write Conversion Rate Byte
WLHO	0Bh	0100 0110	Write Internal High Limit
WLLM	0Ch	1100 1001	Write Internal Low Limit
WRHA	0Dh	0100 0110	Write External High Limit
WRLN	0Eh	1100 1001	Write External Low Limit
OSHT	0Fh	N/A	One Shot
REET	10h	0000 0000	Read External Extended Temperature
RIET	11h	0000 0000	Read Internal Extended Temperature
RWO2E	16h	0101 0101	Read/Write External $\overline{\text{OVERT2}}$ Limit (MAX6659 only)
RW02I	17h	0101 0101	Read/Write Internal $\overline{\text{OVERT2}}$ Limit (MAX6659 only)
RWOE	19h	0101 0101	Read/Write External $\overline{\text{OVERT1}}$ Limit
RWOI	20h	0101 0101	Read/Write Internal $\overline{\text{OVERT1}}$ Limit
HYST	21h	0000 1010	Overtemperature Hysteresis
—	FEh	4Dh	Read Manufacture ID

For example, $\overline{\text{OVERT1}}$ has a threshold set to +50°C and is connected to a fan. $\overline{\text{OVERT2}}$ has a threshold of +75°C and is connected to a system shutdown. If the system reaches +50°C, the fan turns on, trying to cool the system. If the system continues to heat up to the critical temperature of +75°C, $\overline{\text{OVERT2}}$ causes the system to shut down.

Command Byte Functions

The 8-bit Command Byte register (Table 4) is the master index that points to the various other registers within the MAX6657/MAX6658/MAX6659. This register's POR state is 0000 0000, so a Receive Byte transmission (a protocol that lacks the command byte) occurring immediately after POR returns the current local temperature data.

One-Shot

The one-shot command immediately forces a new conversion cycle to begin. If the one-shot command is received when the MAX6657/MAX6658/MAX6659 are in software standby mode ($\overline{\text{RUN}}$/STOP bit = 1), a new conversion is begun, after which the device returns to standby mode. If a conversion is in progress when a one-shot command is received, the command is ignored. If a one-shot command is received in autoconvert mode ($\overline{\text{RUN}}$/STOP bit = 0) between conversions, a new conversion begins, the conversion rate timer is reset, and the next automatic conversion takes place after a full delay elapses.

Configuration Byte Functions

The Configuration Byte register (Table 5) is a Read-Write register with several functions. Bit 7 is used to mask (disable) interrupts. Bit 6 puts the device into software standby mode (STOP) or autonomous (RUN) mode. Bit 5 selects the type of external junction (set to 1 for a substrate PNP on an IC or set to 0 for a discrete diode-connected transistor) for optimized measurements. Bits 0 to 4 are reserved and return a zero when read.

Status Byte Functions

The status byte (Table 6) indicates which (if any) temperature thresholds have been exceeded. This byte also indicates whether the ADC is converting and if there is an open-circuit fault detected with the external sense junction. After POR, the normal state of the MSB is 1 and all the other flag bits are 0, assuming no alert or overtemperature conditions are present. Bits 2 through 6 of the Status register are cleared by any successful read of the Status register, unless the fault persists. The ALERT output follows the status flag bit. Both are cleared when successfully read, but if the condition still exists, they reassert at the end of the next conversion.

The bits indicating OVERT1 (bits 0 and 1) are cleared only when the condition no longer exists. Reading the status byte does not clear the $\overline{\text{OVERT1}}$ outputs or fault bits. One way to eliminate the fault condition is for the measured temperature to drop below the temperature threshold minus the hysteresis value. Another way to eliminate the fault condition is by writing new values for the OVERT1 threshold or hysteresis so that a fault condition is no longer present. Note that the status byte does not provide status of $\overline{\text{OVERT2}}$.

The MAX6657/MAX6658/MAX6659 incorporate collision avoidance so that completely asynchronous operation is allowed between SMBus operations and temperature conversions.

When autoconverting, if the T_{HIGH} and T_{LOW} limits are close together, it's possible for both high-temp and low-temp status bits to be set, depending on the amount of time between status read operations. In these circumstances, it is best not to rely on the status bits to indicate reversals in long-term temperature changes. Instead, use a current temperature reading to establish the trend direction.

Conversion Rate Byte

The Conversion Rate register (Table 7) programs the time interval between conversions in free-running autonomous mode ($\overline{\text{RUN}}$/STOP = 0). This variable rate

Table 5. Configuration-Byte Bit Assignments

BIT	NAME	POR STATE	FUNCTION
7 (MSB)	MASK1	0	Masks $\overline{\text{ALERT}}$ interrupts if a 1.
6	$\overline{\text{RUN}}$/STOP	0	Standby mode control bit; if a 1, standby mode is initiated.
5	SPNP	1	Set to 1 when the remote sensor is a substrate or common collector PNP. Set to 0 when the remote sensor is a diode-connected discrete transistor.
4 to 0	RFU	0	Reserved

Table 6. Status Register Bit Assignments

BIT	NAME	POR STATE	FUNCTION
7 (MSB)	BUSY	1	A/D is busy converting when high.
6	LHIGH	0	Internal high-temperature alarm has tripped when high; cleared by POR or readout of the Status register if the fault condition no longer exists.
5	LLOW	0	Internal low-temperature alarm has tripped when high; cleared by POR or readout of the Status register if the fault condition no longer exists.
4	RHIGH	0	External high-temperature alarm has tripped when high; cleared by POR or readout of the Status register if the fault condition no longer exists.
3	RLOW	0	External low-temperature alarm has tripped when high; cleared by POR or readout of the Status register if the fault condition no longer exists.
2	OPEN	0	A high indicates an external diode open; cleared by POR or readout of the Status register if the fault condition no longer exists.
1	EOT1	0	A high indicates the external junction temperature exceeds the external OVERT1 threshold.
0	IOT1	0	A high indicates the internal junction temperature exceeds the internal OVERT1 threshold.

Table 7. Conversion-Rate Control Byte

DATA	CONVERSION RATE (Hz)
00h	0.0625
01h	0.125
02h	0.25
03h	0.5
04h	1
05h	2
06h	4
07h	8
08h	16
09h	16
0Ah-FFh	Reserved

Note: *Extended resolution applies only for conversion rates of 4Hz or slower.*

control can be used to reduce the supply current in portable-equipment applications. The conversion rate byte's POR state is 08h (16Hz). The MAX6657/MAX6658/MAX6659 use only the 4 least-significant bits (LSBs) of this register. The 4 most-significant bits (MSBs) are "don't care" and should be set to zero when possible. The conversion rate tolerance is ±25% at any rate setting.

Valid A/D conversion results for both channels are available one total conversion time (125ms nominal, 156ms maximum) after initiating a conversion, whether conversion is initiated through the $\overline{\text{RUN}}$/STOP bit, hardware $\overline{\text{STBY}}$ pin, one-shot command, or initial power-up.

Slave Addresses

The MAX6657/MAX6658 have a fixed address of 1001100. The MAX6659 can be programmed to have one of three different addresses, allowing up to three devices to reside on the same bus without address conflicts. Table 8 lists address information.

The address pin state is checked at POR only, and the address data stays latched to reduce quiescent supply current due to the bias current needed for high-Z state detection.

The MAX6657/MAX6658/MAX6659 also respond to the SMBus Alert Response slave address (see *Alert Response Address* section).

POR and UVLO

The MAX6657/MAX6658/MAX6659 have a volatile memory. To prevent unreliable power-supply conditions

Table 8. Slave Address Decoding for MAX6659

ADD CONNECTION	ADDRESS
GND	1001100
V_{CC}	1001110
Unconnected	1001101

from corrupting the data in memory and causing erratic behavior, a POR voltage detector monitors V_{CC} and clears the memory if V_{CC} falls below 1.7V (typ, see *Electrical Characteristics*). When power is first applied and V_{CC} rises above 2.0V (typ), the logic blocks begin operating, although reads and writes at V_{CC} levels below 3.0V are not recommended. A second V_{CC} comparator and the ADC undervoltage lockout (UVLO) comparator prevent the ADC from converting until there is sufficient headroom (V_{CC} = +2.8V typ).

Power-Up Defaults

Power-up defaults include:

- ADC begins autoconverting at a 16Hz rate (legacy resolution).
- THIGH and TLOW registers are set to default limits, respectively.
- Interrupt latch is cleared.
- Address-select pin is sampled (MAX6659 only).
- Command register is set to 00h to facilitate quick internal Receive Byte queries.
- Hysteresis is set to 10°C.
- Transistor type is set to a substrate or common collector PNP.

Table 9. Read Format for Alert Response Address (000 1100)

BIT	NAME	FUNCTION
7 (MSB)	ADD7	Provide the current MAX6659 slave address that was latched at POR (Table 8)
6	ADD6	
5	ADD5	
4	ADD4	
3	ADD3	
2	ADD2	
1	ADD1	
0 (LSB)	1	Logic 1

Typical Operating Circuit

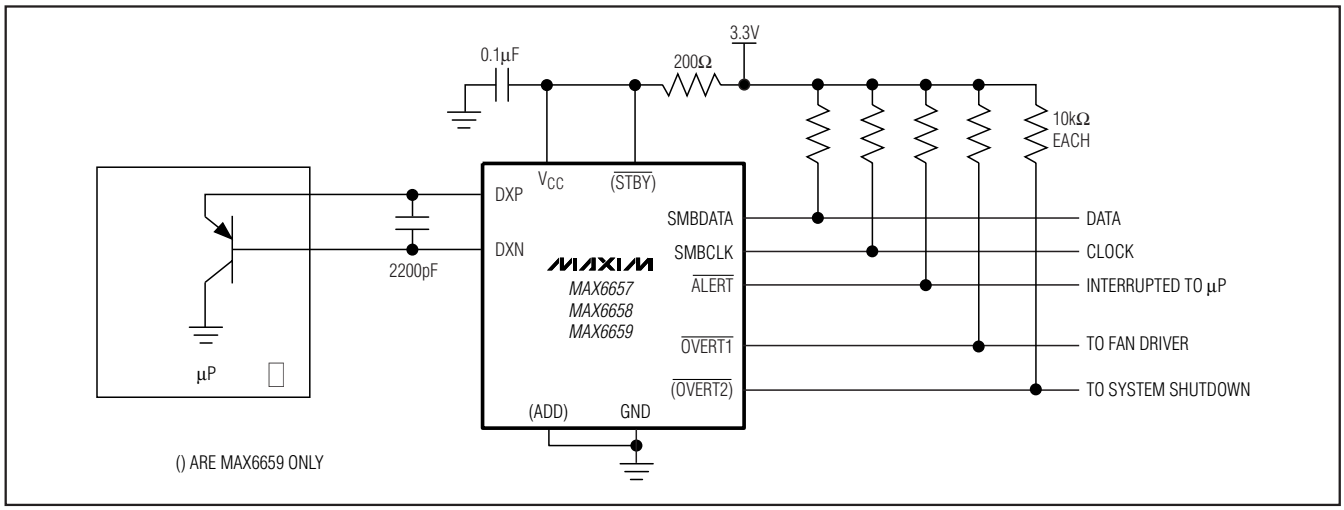

Ordering Information (continued)

PART	MEASURED TEMP RANGE	PIN-PACKAGE
MAX6658MSA	-55°C to +125°C	8 SO
MAX6658MSA+	-55°C to +125°C	8 SO
MAX6658MSA-T	-55°C to +125°C	8 SO
MAX6658MSA+T	-55°C to +125°C	8 SO
MAX6659MEE	-55°C to +125°C	16 QSOP
MAX6659MEE+	-55°C to +125°C	16 QSOP
MAX6659MEE-T	-55°C to +125°C	16 QSOP
MAX6659MEE+T	-55°C to +125°C	16 QSOP

Note: *All devices are specified over the -55°C to +125°C operating temperature range.*

+Denotes a lead(Pb)-free/RoHS-compliant package.

T = Tape and reel.

Chip Information

PROCESS: BiCMOS

Package Information

For the latest package outline information and land patterns, go to **www.maxim-ic.com/packages**. Note that a "+", "#", or "-" in the package code indicates RoHS status only. Package drawings may show a different suffix character, but the drawing pertains to the package regardless of RoHS status.

PACKAGE TYPE	PACKAGE CODE	OUTLINE NO.	LAND PATTERN NO.
8 SO	S8-5	21-0041	90-0096
16 QSOP	E16-5	21-0055	90-0167

1°C Remote/Local Temperature Sensors with SMBus Serial Interface and Overtemperature Alarms

Revision History

REVISION NUMBER	REVISION DATE	DESCRIPTION	PAGES CHANGED
5	10/10	Updated the *Ordering Information* table to include lead(Pb)-free parts, added the soldering temperature to the *Absolute Maximum Ratings* section, replaced the package outline drawings with the *Package Information* table	1, 2, 15

Maxim cannot assume responsibility for use of any circuitry other than circuitry entirely embodied in a Maxim product. No circuit patent licenses are implied. Maxim reserves the right to change the circuitry and specifications without notice at any time.

© 2010 Maxim Integrated Products Maxim is a registered trademark of Maxim Integrated Products, Inc.

Looking for pricing, stock, or lifecycle information?

Click below to explore more details on WIN SOURCE:

- View MAX6657MSA+ on WIN SOURCE
- Maxim Integrated Information

Optimize Your Supply Chain with WIN SOURCE Solutions

- Global Sourcing Solution
- Obsolete Management
- Cost Control Management
- Shortage Management
- Alternative Solution
- Excess Inventory Management