THE DATASHEET OF

MC74LCX06DR2G

www.win-source.net 0086-755-83957316

MC74LCX06

Low-Voltage CMOS Hex Inverter with Open Drain Outputs

With 5 V − Tolerant Inputs

The MC74LCX06 is a high performance hex inverter operating from a 2.3 V to 3.6 V supply. High impedance TTL compatible inputs significantly reduce current loading to input drivers. These LCX devices have open drain outputs which provide the ability to set output levels, or do active−HIGH AND or active−LOW OR functions. A V_I specification of 5.5 V allows MC74LCX06 inputs to be safely driven from 5.0 V devices.

Features

- Designed for 2.3 V to 3.6 V V_{CC} Operation
- 5.0 V Tolerant Inputs/Outputs
- LVTTL Compatible
- LVCMOS Compatible
- 24 mA Output Sink Capability
- Near Zero Static Supply Current (10 μA) Substantially Reduces System Power Requirements
- Latchup Performance Exceeds 500 mA
- Wired−OR, Wired−AND
- Output Level Can Be Set Externally Without Affecting Speed of Device
- Functionally Compatible with LCX05
- ESD Performance: Human Body Model >1500 V; Machine Model >200 V
- These Devices are Pb−Free, Halogen Free/BFR Free and are RoHS Compliant

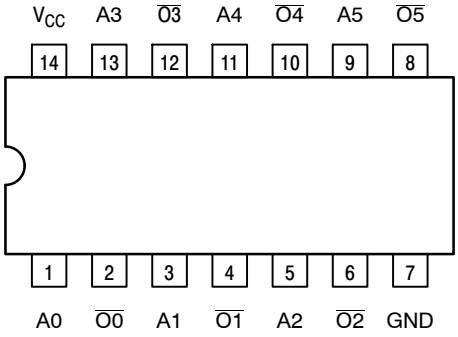

Figure 1. Pinout: 14−Lead (Top View)

ON Semiconductor®

http://onsemi.com

MARKING DIAGRAMS

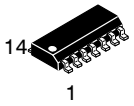

SOIC−14
D SUFFIX
CASE 751A

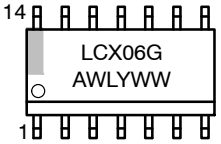

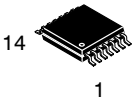

TSSOP−14
DT SUFFIX
CASE 948G

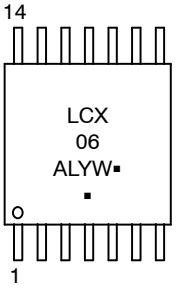

A = Assembly Location
WL, L = Wafer Lot
Y = Year
WW, W = Work Week
G or ▪ = Pb−Free Package
(Note: Microdot may be in either location)

ORDERING INFORMATION

See detailed ordering and shipping information in the package dimensions section on page 2 of this data sheet.

© Semiconductor Components Industries, LLC, 2012

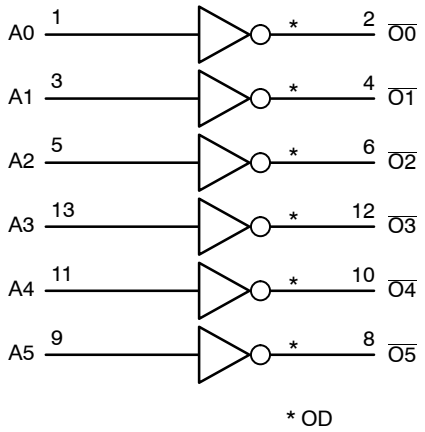

Figure 2. Logic Diagram

Table 1. PIN NAMES

Pins	Function
An $\overline{On}$	Data Inputs Outputs

Table 2. TRUTH TABLE

An	$\overline{On}$
L H	Z L

MAXIMUM RATINGS

Symbol	Parameter	Value	Condition	Unit
V_{CC}	DC Supply Voltage	−0.5 to +7.0		V
V_I	DC Input Voltage	$-0.5 \le V_I \le +7.0$		V
V_O	DC Output Voltage	$-0.5 \le V_O \le +7.0$	Output in HIGH or LOW State (Note 1)	V
I_{IK}	DC Input Diode Current	−50	V_I < GND	mA
I_{OK}	DC Output Diode Current	−50	V_O < GND	mA
		+50	$V_O > V_{CC}$	mA
I_O	DC Output/Sink Current	+50		mA
I_{CC}	DC Supply Current Per Supply Pin	±100		mA
I_{GND}	DC Ground Current Per Ground Pin	±100		mA
T_{STG}	Storage Temperature Range	−65 to +150		°C
MSL	Moisture Sensitivity		Level 1	

Maximum ratings are those values beyond which device damage can occur. Maximum ratings applied to the device are individual stress limit values (not normal operating conditions) and are not valid simultaneously. If these limits are exceeded, device functional operation is not implied, damage may occur and reliability may be affected.

1. I_O absolute maximum rating must be observed.

ORDERING INFORMATION

Device	Package	Shipping†
MC74LCX06DG	SOIC−14 (Pb−Free)	55 Units / Rail
MC74LCX06DR2G	SOIC−14 (Pb−Free)	2500 / Tape & Reel
MC74LCX06DTG	TSSOP−14 (Pb−Free)	96 Units / Rail
MC74LCX06DTR2G	TSSOP−14 (Pb−Free)	2500 / Tape & Reel

†For information on tape and reel specifications, including part orientation and tape sizes, please refer to our Tape and Reel Packaging Specifications Brochure, BRD8011/D.

RECOMMENDED OPERATING CONDITIONS

Symbol	Parameter		Min	Typ	Max	Unit
V_{CC}	Supply Voltage	Operating Data Retention Only	2.0 1.5	2.5, 3.3 2.5, 3.3	3.6 3.6	V
V_I	Input Voltage		0		5.5	V
V_O	Output Voltage	(HIGH or LOW State)	0		V_{CC}	V
I_{OL}	LOW Level Output Current Sink	V_{CC} = 3.0 V – 3.6 V V_{CC} = 2.7 V – 3.0 V V_{CC} = 2.3 V – 2.7 V			+24 +12 +8	mA
T_A	Operating Free−Air Temperature		−40		+85	°C
$\Delta t/\Delta V$	Input Transition Rise or Fall Rate, V_{IN} from 0.8 V to 2.0 V, V_{CC} = 3.0 V		0		10	ns/V

DC ELECTRICAL CHARACTERISTICS (T_A = −40°C to +85°C)

Symbol	Characteristic	Condition	Min	Max	Unit
V_{IH}	HIGH Level Input Voltage (Note 2)	2.3 V ≤ V_{CC} ≤ 2.7 V	1.7		V
		2.7 V ≤ V_{CC} ≤ 3.6 V	2.0		
V_{IL}	LOW Level Input Voltage (Note 2)	2.3 V ≤ V_{CC} ≤ 2.7 V		0.7	V
		2.7 V ≤ V_{CC} ≤ 3.6 V		0.8	
V_{OL}	LOW Level Output Voltage	2.3 V ≤ V_{CC} ≤ 3.6 V; I_{OL} = 100 μA		0.2	V
		V_{CC} = 2.3 V; I_{OL}= 8 mA		0.3	
		V_{CC} = 2.7 V; I_{OL}= 12 mA		0.4	
		V_{CC} = 3.0 V; I_{OL} = 16 mA		0.4	
		V_{CC} = 3.0 V; I_{OL} = 24 mA		0.55	
I_{OZ}	3−State Output Current	V_{CC} = 3.6 V, V_{IN} = V_{IH} or V_{IL}, V_{OUT} = 0 to 5.5 V		±5	μA
I_{OFF}	Power Off Leakage Current	V_{CC} = 0, V_{IN} = 5.5 V or V_{OUT} = 5.5 V		10	μA
I_{IN}	Input Leakage Current	V_{CC} = 3.6 V, V_{IN} = 5.5 V or GND		±5	μA
I_{CC}	Quiescent Supply Current	V_{CC} = 3.6 V, V_{IN} = 5.5 V or GND		10	μA
ΔI_{CC}	Increase in I_{CC} per Input	2.3 V ≤ V_{CC} ≤ 3.6 V One Input at V_{IH} = V_{CC} − 0.6 V		500	μA

2. These values of V_I are used to test DC electrical characteristics only.

AC ELECTRICAL CHARACTERISTICS (T_A = −40°C to +85°C)

Symbol	Parameter	V_{CC} = 3.3 V ± 0.3 V C_L = 50 pF		V_{CC}= 2.7 V C_L = 50 pF		V_{CC} = 2.5 V ± 0.2 V C_L = 30 pF		Unit
		Min	Max	Min	Max	Min	Max	
t_{PLZ} t_{PZL}	Propagation Delay Input to Output	0.8 0.8	3.7 3.7	1.0 1.0	4.1 4.1	0.8 0.8	3.5 3.5	ns ns

DYNAMIC SWITCHING CHARACTERISTICS (T_A = +25°C)

Symbol	Characteristic	Condition	Min	Typ	Max	Unit
V_{OLP}	Dynamic LOW Peak Voltage (Note 3)	V_{CC} = 3.3 V, C_L = 50 pF, V_{IH} = 3.3 V, V_{IL} = 0 V V_{CC} = 2.5 V, C_L = 30 pF, V_{IH} = 2.5 V, V_{IL} = 0 V		0.9 0.7		V
V_{OLV}	Dynamic LOW Valley Voltage (Note 3)	V_{CC} = 3.3 V, C_L = 50 pF, V_{IH} = 3.3 V, V_{IL} = 0 V V_{CC} = 2.5 V, C_L = 30 pF, V_{IH} = 2.5 V, V_{IL} = 0 V		−0.8 −0.6		V

3. Number of outputs defined as “n”. Measured with “n−1” outputs switching from HIGH−to−LOW or LOW−to−HIGH. The remaining output is measured in the LOW state.

CAPACITIVE CHARACTERISTICS

Symbol	Parameter	Condition	Typical	Unit
C_{IN}	Input Capacitance	V_{CC} = 3.3 V, V_I = 0 V or V_{CC}	7	pF
C_{OUT}	Output Capacitance	V_{CC} = 3.3 V, V_I = 0 V or V_{CC}	8	pF
C_{PD}	Power Dissipation Capacitance	10 MHz, V_{CC} = 3.3 V, V_I = 0 V or V_{CC}	25	pF

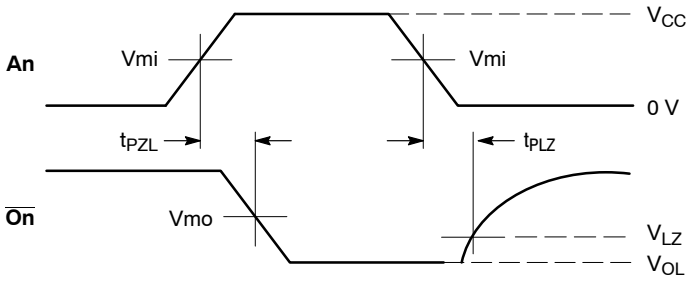

PROPAGATION DELAYS
$t_R = t_F$ = 2.5 ns, 10% to 90%; f = 1 MHz; t_W = 500 ns

Table 3. AC WAVEFORMS

Symbol	V_{CC}		
	3.3 V ± 0.3 V	**2.7 V**	**2.5 V ± 0.2 V**
V_{mi}	1.5 V	1.5 V	V_{CC} / 2
V_{mo}	1.5 V	1.5 V	V_{CC} / 2
V_{LZ}	V_{OL} + 0.3 V	V_{OL} + 0.3 V	V_{OL} + 0.15 V

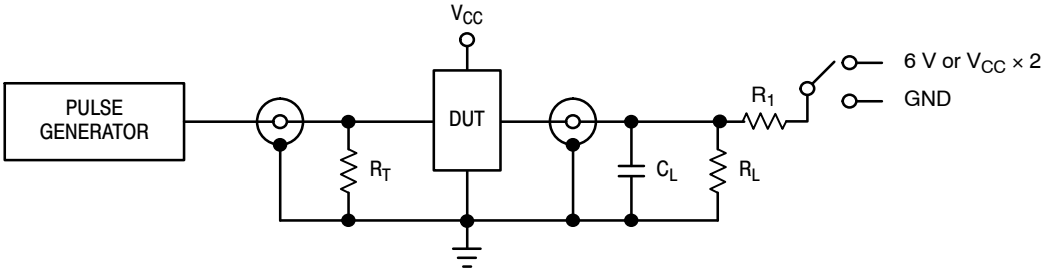

Table 4. TEST CIRCUIT

TEST	SWITCH
t_{PZL}, t_{PLZ}	6 V
Open Collector/Drain t_{PLH} and t_{PHL}	6 V
t_{PZH}, t_{PHZ}	GND

C_L = 50 pF at V_{CC} = 3.3 ± 0.3 V or equivalent (includes jig and probe capacitance)
C_L = 30 pF at V_{CC} = 2.5 ± 0.2 V or equivalent (includes jig and probe capacitance)
R_L = R_1 = 500 Ω or equivalent
R_T = Z_{OUT} of pulse generator (typically 50 Ω)

PACKAGE DIMENSIONS

TSSOP−14
DT SUFFIX
CASE 948G
ISSUE B

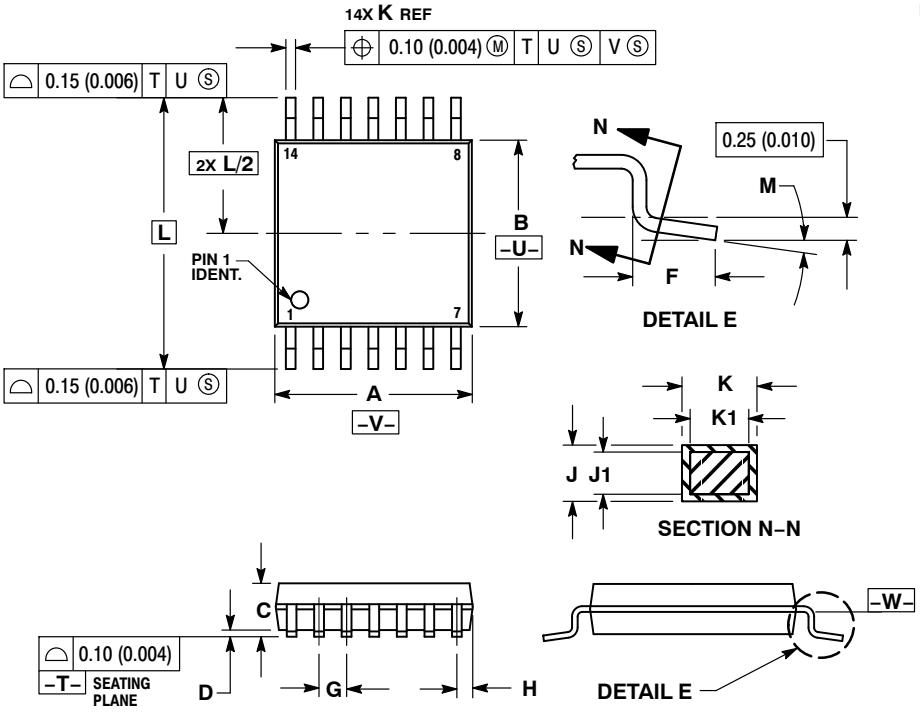

NOTES:
1. DIMENSIONING AND TOLERANCING PER ANSI Y14.5M, 1982.
2. CONTROLLING DIMENSION: MILLIMETER.
3. DIMENSION A DOES NOT INCLUDE MOLD FLASH, PROTRUSIONS OR GATE BURRS. MOLD FLASH OR GATE BURRS SHALL NOT EXCEED 0.15 (0.006) PER SIDE.
4. DIMENSION B DOES NOT INCLUDE INTERLEAD FLASH OR PROTRUSION. INTERLEAD FLASH OR PROTRUSION SHALL NOT EXCEED 0.25 (0.010) PER SIDE.
5. DIMENSION K DOES NOT INCLUDE DAMBAR PROTRUSION. ALLOWABLE DAMBAR PROTRUSION SHALL BE 0.08 (0.003) TOTAL IN EXCESS OF THE K DIMENSION AT MAXIMUM MATERIAL CONDITION.
6. TERMINAL NUMBERS ARE SHOWN FOR REFERENCE ONLY.
7. DIMENSION A AND B ARE TO BE DETERMINED AT DATUM PLANE −W−.

	MILLIMETERS		INCHES	
DIM	MIN	MAX	MIN	MAX
A	4.90	5.10	0.193	0.200
B	4.30	4.50	0.169	0.177
C	−−−	1.20	−−−	0.047
D	0.05	0.15	0.002	0.006
F	0.50	0.75	0.020	0.030
G	0.65 BSC		0.026 BSC	
H	0.50	0.60	0.020	0.024
J	0.09	0.20	0.004	0.008
J1	0.09	0.16	0.004	0.006
K	0.19	0.30	0.007	0.012
K1	0.19	0.25	0.007	0.010
L	6.40 BSC		0.252 BSC	
M	0 °	8 °	0 °	8 °

SOLDERING FOOTPRINT*

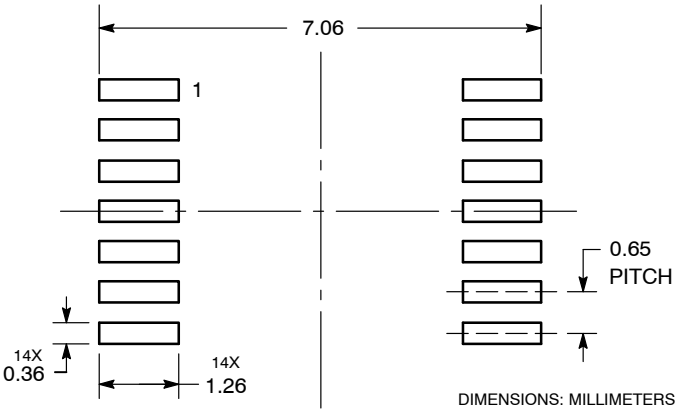

*For additional information on our Pb−Free strategy and soldering details, please download the ON Semiconductor Soldering and Mounting Techniques Reference Manual, SOLDERRM/D.

PACKAGE DIMENSIONS

SOIC−14 NB
CASE 751A−03
ISSUE K

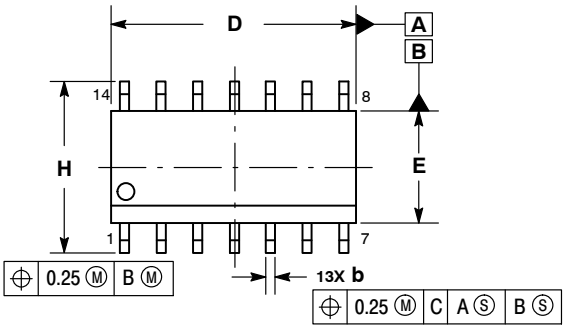

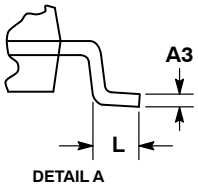

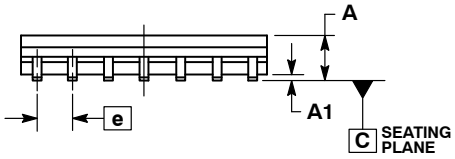

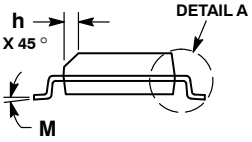

NOTES:
1. DIMENSIONING AND TOLERANCING PER ASME Y14.5M, 1994.
2. CONTROLLING DIMENSION: MILLIMETERS.
3. DIMENSION b DOES NOT INCLUDE DAMBAR PROTRUSION. ALLOWABLE PROTRUSION SHALL BE 0.13 TOTAL IN EXCESS OF AT MAXIMUM MATERIAL CONDITION.
4. DIMENSIONS D AND E DO NOT INCLUDE MOLD PROTRUSIONS.
5. MAXIMUM MOLD PROTRUSION 0.15 PER SIDE.

	MILLIMETERS		INCHES	
DIM	MIN	MAX	MIN	MAX
A	1.35	1.75	0.054	0.068
A1	0.10	0.25	0.004	0.010
A3	0.19	0.25	0.008	0.010
b	0.35	0.49	0.014	0.019
D	8.55	8.75	0.337	0.344
E	3.80	4.00	0.150	0.157
e	1.27 BSC		0.050 BSC	
H	5.80	6.20	0.228	0.244
h	0.25	0.50	0.010	0.019
L	0.40	1.25	0.016	0.049
M	0 °	7 °	0 °	7 °

SOLDERING FOOTPRINT*

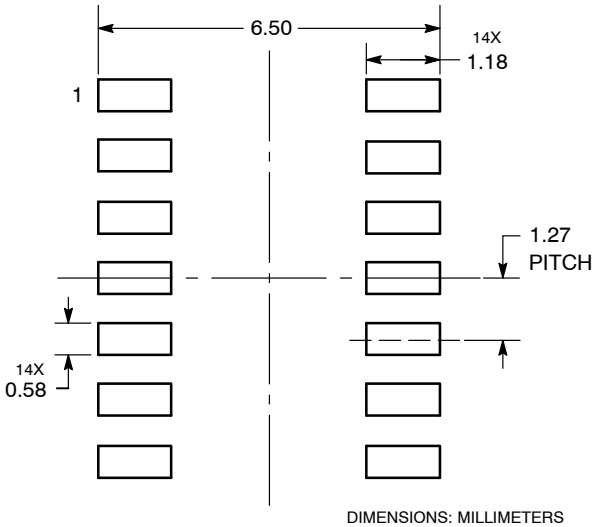

DIMENSIONS: MILLIMETERS

*For additional information on our Pb−Free strategy and soldering details, please download the ON Semiconductor Soldering and Mounting Techniques Reference Manual, SOLDERRM/D.

ON Semiconductor and ON are registered trademarks of Semiconductor Components Industries, LLC (SCILLC). SCILLC owns the rights to a number of patents, trademarks, copyrights, trade secrets, and other intellectual property. A listing of SCILLC's product/patent coverage may be accessed at www.onsemi.com/site/pdf/Patent−Marking.pdf. SCILLC reserves the right to make changes without further notice to any products herein. SCILLC makes no warranty, representation or guarantee regarding the suitability of its products for any particular purpose, nor does SCILLC assume any liability arising out of the application or use of any product or circuit, and specifically disclaims any and all liability, including without limitation special, consequential or incidental damages. "Typical" parameters which may be provided in SCILLC data sheets and/or specifications can and do vary in different applications and actual performance may vary over time. All operating parameters, including "Typicals" must be validated for each customer application by customer's technical experts. SCILLC does not convey any license under its patent rights nor the rights of others. SCILLC products are not designed, intended, or authorized for use as components in systems intended for surgical implant into the body, or other applications intended to support or sustain life, or for any other application in which the failure of the SCILLC product could create a situation where personal injury or death may occur. Should Buyer purchase or use SCILLC products for any such unintended or unauthorized application, Buyer shall indemnify and hold SCILLC and its officers, employees, subsidiaries, affiliates, and distributors harmless against all claims, costs, damages, and expenses, and reasonable attorney fees arising out of, directly or indirectly, any claim of personal injury or death associated with such unintended or unauthorized use, even if such claim alleges that SCILLC was negligent regarding the design or manufacture of the part. SCILLC is an Equal Opportunity/Affirmative Action Employer. This literature is subject to all applicable copyright laws and is not for resale in any manner.

PUBLICATION ORDERING INFORMATION

LITERATURE FULFILLMENT:
Literature Distribution Center for ON Semiconductor
P.O. Box 5163, Denver, Colorado 80217 USA
Phone: 303−675−2175 or 800−344−3860 Toll Free USA/Canada
Fax: 303−675−2176 or 800−344−3867 Toll Free USA/Canada
Email: orderlit@onsemi.com

N. American Technical Support: 800−282−9855 Toll Free USA/Canada
Europe, Middle East and Africa Technical Support:
Phone: 421 33 790 2910
Japan Customer Focus Center
Phone: 81−3−5817−1050

ON Semiconductor Website: **www.onsemi.com**

Order Literature: http://www.onsemi.com/orderlit

For additional information, please contact your local Sales Representative

Looking for pricing, stock, or lifecycle information?

Click below to explore more details on WIN SOURCE:

- View MC74LCX06DR2G on WIN SOURCE
- ON Semiconductor Information

Optimize Your Supply Chain with WIN SOURCE Solutions

- Global Sourcing Solution
- Obsolete Management
- Cost Control Management
- Shortage Management
- Alternative Solution
- Excess Inventory Management