THE DATASHEET OF

MC74LCX14DR2G

www.win-source.net 0086-755-83957316

MC74LCX14

Low Voltage CMOS Hex Schmitt Inverter With 5 V-Tolerant Inputs

ON Semiconductor®

http://onsemi.com

The MC74LCX14 is a high performance hex inverter with Schmitt−Trigger inputs operating from a 2.3 to 3.6 V supply. High impedance TTL compatible inputs significantly reduce current loading to input drivers, while TTL compatible outputs offer improved switching noise performance. A V_I specification of 5.5 V allows MC74LCX14 inputs to be safely driven from 5.0 V devices.

Pin configuration and function are the same as the MC74LCX04, but the inputs have hysteresis and, with its Schmitt trigger function, the LCX14 can be used as a line receiver which will receive slow input signals.

Features

- Designed for 2.3 V to 3.6 V V_{CC} Operation
- 5.0 V Tolerant Inputs − Interface Capability with 5.0 V TTL Logic
- LVTTL Compatible
- LVCMOS Compatible
- 24 mA Balanced Output Sink and Source Capability
- Near Zero Static Supply Current (10 μA) Substantially Reduces System Power Requirements
- Latchup Performance Exceeds 500 mA
- Current Drive Capability is 24 mA at Source/Sink
- Pin and Function Compatible with Other Standard Logic Families
- ESD Performance: Human Body Model >2000 V
Machine Model >100 V
- Chip Complexity: 41 Equivalent Gates
- These Devices are Pb−Free, Halogen Free/BFR Free and are RoHS Compliant

MARKING DIAGRAMS

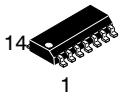

SOIC−14
D SUFFIX
CASE 751A

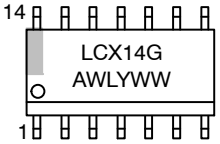

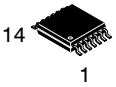

TSSOP−14
DT SUFFIX
CASE 948G

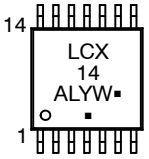

A	=	Assembly Location
L, WL	=	Wafer Lot
Y, YY	=	Year
W, WW	=	Work Week
G or ▪	=	Pb−Free Package

(Note: Microdot may be in either location)

ORDERING INFORMATION

See detailed ordering and shipping information in the package dimensions section on page 4 of this data sheet.

© Semiconductor Components Industries, LLC, 2012

October, 2012 − Rev. 8

Publication Order Number:
MC74LCX14/D

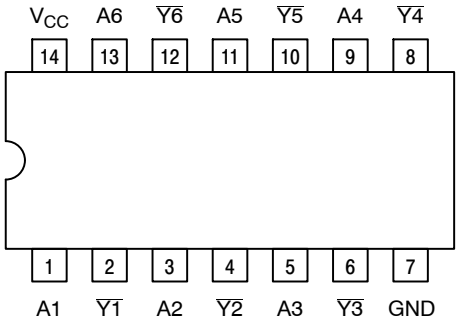

Figure 1. Pinout: 14−Lead (Top View)

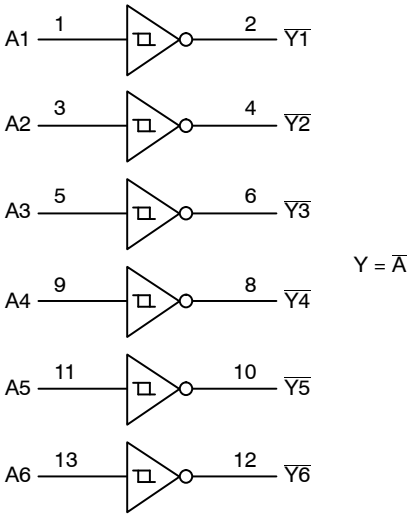

Figure 2. Logic Diagram

PIN NAMES

Pins	Function
An	Data Inputs
$\overline{Yn}$	Outputs

TRUTH TABLE

Inputs	Outputs
A	$\overline{\mathbf{Y}}$
L	H
H	L

MAXIMUM RATINGS

Symbol	Parameter	Value	Condition	Units
V_{CC}	DC Supply Voltage	−0.5 to +7.0		V
V_I	DC Input Voltage	$-0.5 \le V_I \le +7.0$		V
V_O	DC Output Voltage	$-0.5 \le V_O \le V_{CC} + 0.5$	Output in HIGH or LOW State. (Note 1)	V
I_{IK}	DC Input Diode Current	−50	V_I < GND	mA
I_{OK}	DC Output Diode Current	−50	V_O < GND	mA
		+50	$V_O > V_{CC}$	mA
I_O	DC Output Source/Sink Current	±50		mA
I_{CC}	DC Supply Current Per Supply Pin	±100		mA
I_{GND}	DC Ground Current Per Ground Pin	±100		mA
T_{STG}	Storage Temperature Range	−65 to +150		°C
MSL	Moisture Sensitivity		Level 1	

Maximum ratings are those values beyond which device damage can occur. Maximum ratings applied to the device are individual stress limit values (not normal operating conditions) and are not valid simultaneously. If these limits are exceeded, device functional operation is not implied, damage may occur and reliability may be affected.

1. I_O absolute maximum rating must be observed.

RECOMMENDED OPERATING CONDITIONS

Symbol	Parameter	Min	Typ	Max	Units
V_{CC}	Supply Voltage Operating Data Retention Only	 2.0 1.5	 2.5 to 3.3	 3.6 3.6	V
V_I	Input Voltage	0		5.5	V
V_O	Output Voltage (HIGH or LOW State)	0		V_{CC}	V
I_{OH}	HIGH Level Output Current V_{CC} = 3.0 V–3.6 V V_{CC} = 2.7 V–3.0 V V_{CC} = 2.3 V–2.7 V			 −24 −12 −8	mA
I_{OL}	LOW Level Output Current V_{CC} = 3.0 V–3.6 V V_{CC} = 2.7 V–3.0 V V_{CC} = 2.3 V–2.7 V			 +24 +12 +8	mA
T_A	Operating Free−Air Temperature	−40		+85	°C

DC ELECTRICAL CHARACTERISTICS

Symbol	Characteristic	Condition	T_A = −40 to 85°C Min	Max	Units
V_{T+}	Positive Input Threshold Voltage (Figure 3)	V_{CC} = 2.5 V V_{CC} = 3.0 V	0.9 1.2	1.7 2.2	V
V_{T-}	Negative Input Threshold Voltage (Figure 3)	V_{CC} = 2.5 V V_{CC} = 3.0 V	0.4 0.6	1.1 1.5	V
V_H	Input Hysteresis Voltage (Figure 3)	V_{CC} = 2.5 V V_{CC} = 3.0 V	0.3 0.4	1.0 1.2	V
V_{OH}	HIGH Level Output Voltage	2.3 V ≤ V_{CC} ≤ 3.6 V; I_{OL} = 100 μA	V_{CC} − 0.2		V
		V_{CC} = 2.3 V; I_{OH} = −8 mA	1.8		
		V_{CC} = 2.7 V; I_{OH} = −12 mA	2.2		
		V_{CC} = 3.0 V; I_{OH} = −18 mA	2.4		
		V_{CC} = 3.0 V; I_{OH} = −24 mA	2.2		
V_{OL}	LOW Level Output Voltage	2.3 V ≤ V_{CC} ≤ 3.6 V; I_{OL} = 100 μA		0.2	V
		V_{CC} = 2.3 V; I_{OL} = 8 mA		0.3	
		V_{CC} = 2.7 V; I_{OL} = 12 mA		0.4	
		V_{CC} = 3.0 V; I_{OL} = 16 mA		0.4	
		V_{CC} = 3.0 V; I_{OL} = 24 mA		0.55	
I_{OFF}	Power Off Leakage Current	V_{CC} = 0, V_{IN} = 5.5 V or V_{OUT} = 5.5 V		10	μA
I_{IN}	Input Leakage Current	V_{CC} = 3.6 V, V_{IN} = 5.5 V or GND		±5.0	μA
I_{CC}	Quiescent Supply Current	V_{CC} = 3.6 V, V_{IN} = 5.5 V or GND		10	μA
ΔI_{CC}	Increase in I_{CC} per Input	2.3 ≤ V_{CC} ≤ 3.6 V; V_{IH} = V_{CC} − 0.6 V		500	μA

AC ELECTRICAL CHARACTERISTICS (Input $t_r = t_f = 2.5$ ns)

Symbol	Parameter	Waveform	Limits						Units
			$T_A = -40°C$ to $+85°C$						
			$V_{CC} = 3.3 V \pm 0.3 V$		$V_{CC} = 2.7 V$		$V_{CC} = 2.5 V \pm 0.2 V$		
			$C_L = 50$ pF		$C_L = 50$ pF		$C_L = 30$ pF		
			Min	Max	Min	Max	Min	Max	
t_{PLH} t_{PHL}	Propagation Delay Input to Output	1	1.5 1.5	6.5 6.5	1.5 1.5	7.5 7.5	1.5 1.5	7.8 7.8	ns
t_{OSHL} t_{OSLH}	Output−to−Output Skew (Note 2)			1.0 1.0					ns

2. Skew is defined as the absolute value of the difference between the actual propagation delay for any two separate outputs of the same device. The specification applies to any outputs switching in the same direction, either HIGH−to−LOW (t_{OSHL}) or LOW−to−HIGH (t_{OSLH}); parameter guaranteed by design.

DYNAMIC SWITCHING CHARACTERISTICS

Symbol	Characteristic	Condition	$T_A = +25°C$			Units
			Min	Typ	Max	
V_{OLP}	Dynamic LOW Peak Voltage (Note 3)	$V_{CC} = 3.3$ V, $C_L = 50$ pF, $V_{IH} = 3.3$ V, $V_{IL} = 0$ V $V_{CC} = 2.5$ V, $C_L = 30$ pF, $V_{IH} = 2.5$ V, $V_{IL} = 0$ V		0.8 0.6		V
V_{OLV}	Dynamic LOW Valley Voltage (Note 3)	$V_{CC} = 3.3$ V, $C_L = 50$ pF, $V_{IH} = 3.3$ V, $V_{IL} = 0$ V $V_{CC} = 2.5$ V, $C_L = 30$ pF, $V_{IH} = 2.5$ V, $V_{IL} = 0$ V		−0.8 −0.6		V

3. Number of outputs defined as “n”. Measured with “n−1” outputs switching from HIGH−to−LOW or LOW−to−HIGH. The remaining output is measured in the LOW state.

CAPACITIVE CHARACTERISTICS

Symbol	Parameter	Condition	Typical	Units
C_{IN}	Input Capacitance	$V_{CC} = 3.3$ V, $V_I = 0$ V or V_{CC}	7	pF
C_{OUT}	Output Capacitance	$V_{CC} = 3.3$ V, $V_I = 0$ V or V_{CC}	8	pF
C_{PD}	Power Dissipation Capacitance	10 MHz, $V_{CC} = 3.3$ V, $V_I = 0$ V or V_{CC}	25	pF

ORDERING INFORMATION

Device	Package	Shipping†
MC74LCX14DG	SOIC−14 (Pb−Free)	55 Units / Rail
MC74LCX14DR2G	SOIC−14 (Pb−Free)	2500 Tape & Reel
MC74LCX14DTG	TSSOP−14 (Pb−Free)	96 Units / Rail
MC74LCX14DTR2G	TSSOP−14 (Pb−Free)	2500 Tape & Reel

†For information on tape and reel specifications, including part orientation and tape sizes, please refer to our Tape and Reel Packaging Specifications Brochure, BRD8011/D.

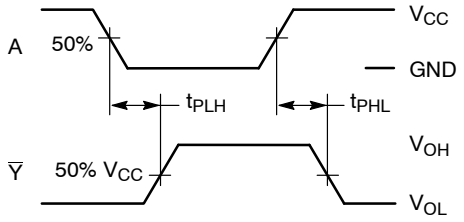

Figure 3. Switching Waveforms

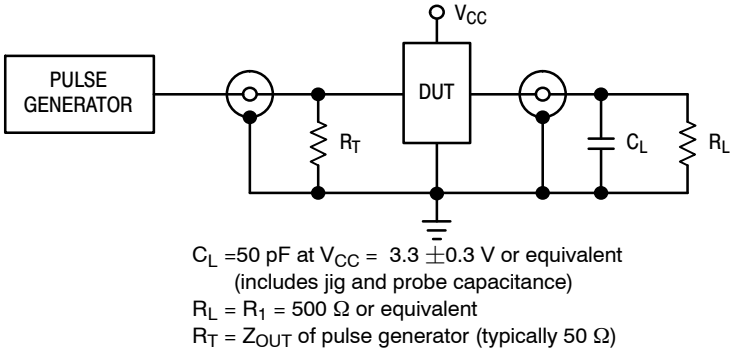

Figure 4. Test Circuit

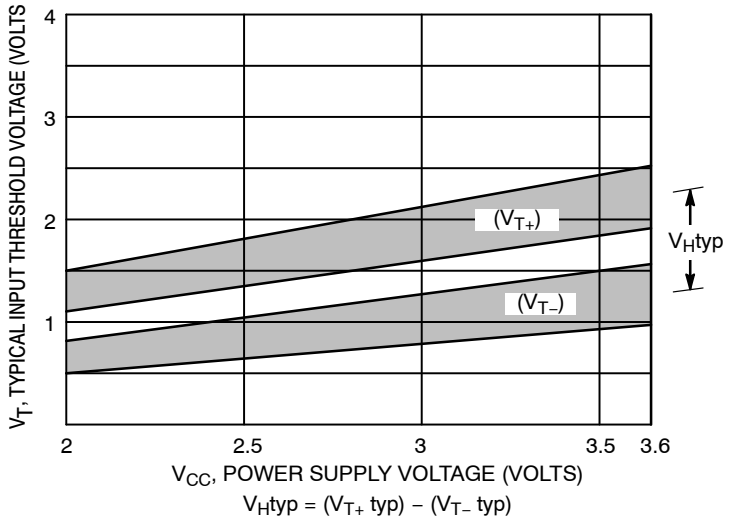

Figure 5. Typical Input Threshold, V_{T+}, V_{T-} versus Power Supply Voltage

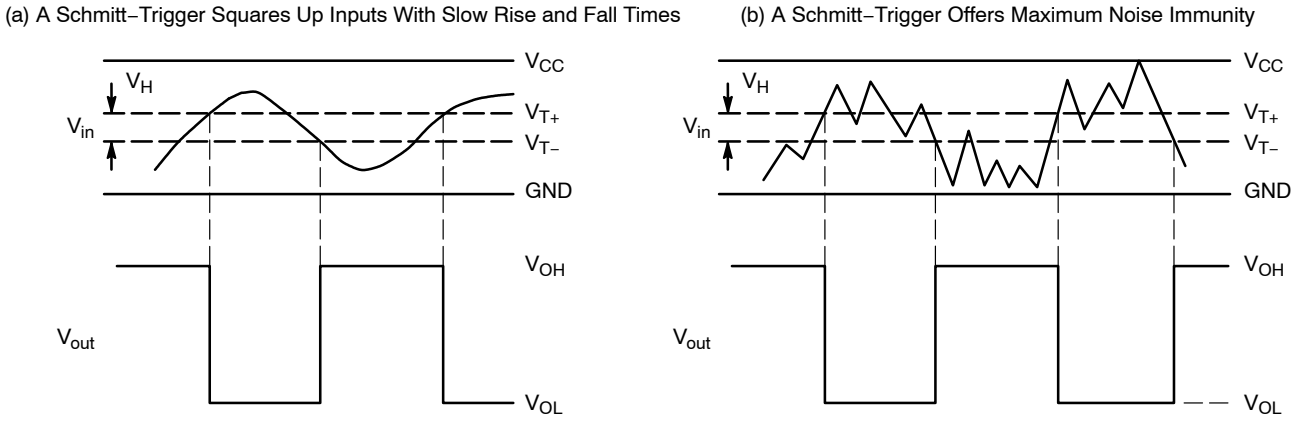

Figure 6. Typical Schmitt−Trigger Applications

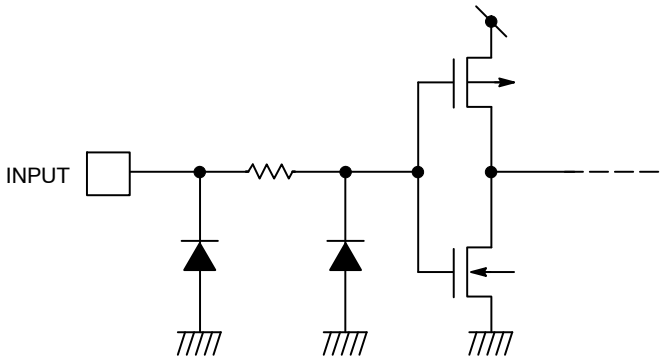

Figure 7. Input Equivalent Circuit

PACKAGE DIMENSIONS

TSSOP−14
CASE 948G
ISSUE B

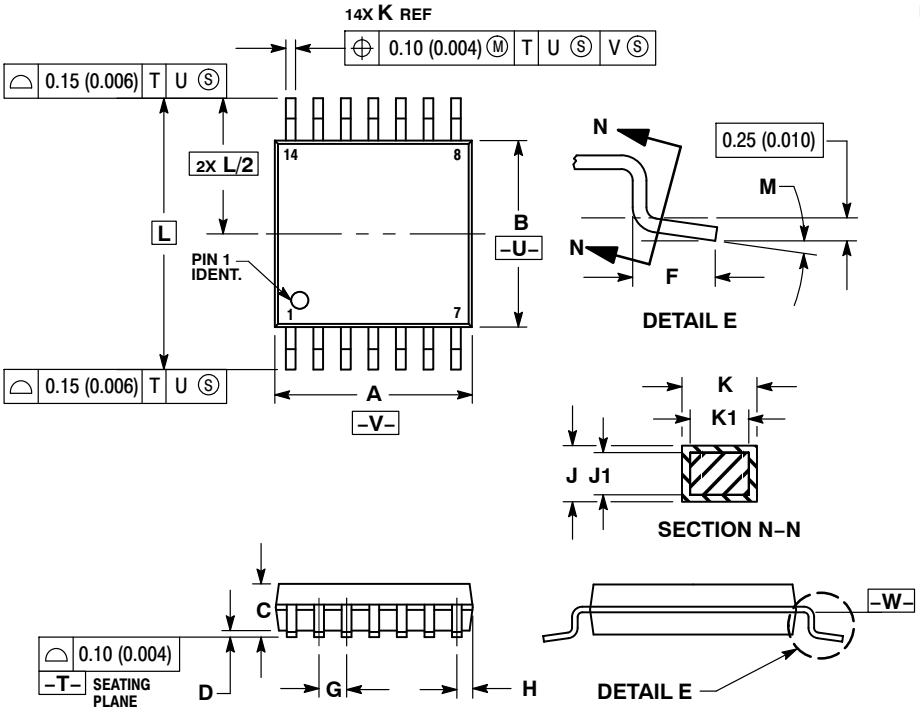

NOTES:
1. DIMENSIONING AND TOLERANCING PER ANSI Y14.5M, 1982.
2. CONTROLLING DIMENSION: MILLIMETER.
3. DIMENSION A DOES NOT INCLUDE MOLD FLASH, PROTRUSIONS OR GATE BURRS. MOLD FLASH OR GATE BURRS SHALL NOT EXCEED 0.15 (0.006) PER SIDE.
4. DIMENSION B DOES NOT INCLUDE INTERLEAD FLASH OR PROTRUSION. INTERLEAD FLASH OR PROTRUSION SHALL NOT EXCEED 0.25 (0.010) PER SIDE.
5. DIMENSION K DOES NOT INCLUDE DAMBAR PROTRUSION. ALLOWABLE DAMBAR PROTRUSION SHALL BE 0.08 (0.003) TOTAL IN EXCESS OF THE K DIMENSION AT MAXIMUM MATERIAL CONDITION.
6. TERMINAL NUMBERS ARE SHOWN FOR REFERENCE ONLY.
7. DIMENSION A AND B ARE TO BE DETERMINED AT DATUM PLANE −W−.

	MILLIMETERS		INCHES	
DIM	MIN	MAX	MIN	MAX
A	4.90	5.10	0.193	0.200
B	4.30	4.50	0.169	0.177
C	−−−	1.20	−−−	0.047
D	0.05	0.15	0.002	0.006
F	0.50	0.75	0.020	0.030
G	0.65 BSC		0.026 BSC	
H	0.50	0.60	0.020	0.024
J	0.09	0.20	0.004	0.008
J1	0.09	0.16	0.004	0.006
K	0.19	0.30	0.007	0.012
K1	0.19	0.25	0.007	0.010
L	6.40 BSC		0.252 BSC	
M	0 °	8 °	0 °	8 °

SOLDERING FOOTPRINT*

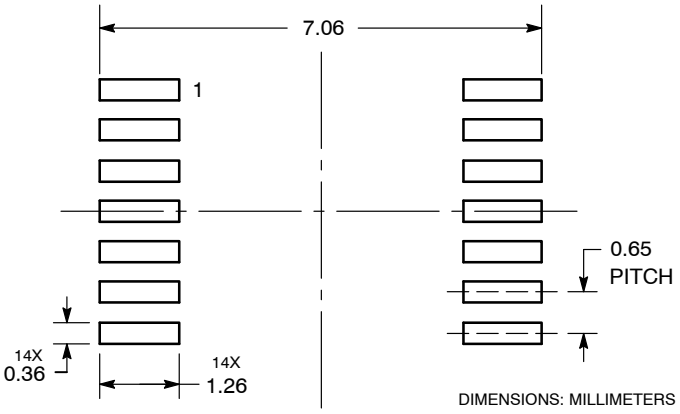

*For additional information on our Pb−Free strategy and soldering details, please download the ON Semiconductor Soldering and Mounting Techniques Reference Manual, SOLDERRM/D.

PACKAGE DIMENSIONS

SOIC−14 NB
CASE 751A−03
ISSUE K

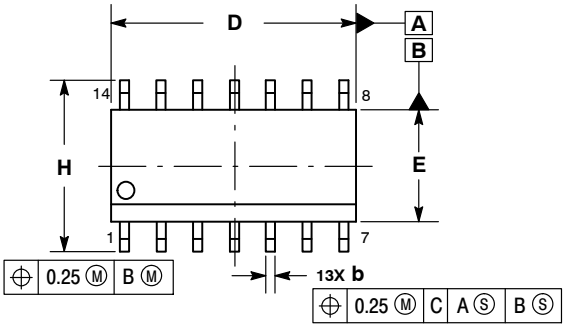

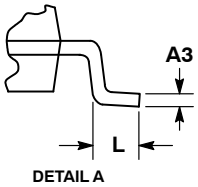

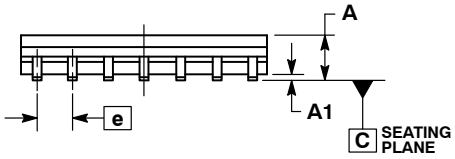

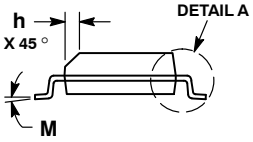

NOTES:
1. DIMENSIONING AND TOLERANCING PER ASME Y14.5M, 1994.
2. CONTROLLING DIMENSION: MILLIMETERS.
3. DIMENSION b DOES NOT INCLUDE DAMBAR PROTRUSION. ALLOWABLE PROTRUSION SHALL BE 0.13 TOTAL IN EXCESS OF AT MAXIMUM MATERIAL CONDITION.
4. DIMENSIONS D AND E DO NOT INCLUDE MOLD PROTRUSIONS.
5. MAXIMUM MOLD PROTRUSION 0.15 PER SIDE.

	MILLIMETERS		INCHES	
DIM	MIN	MAX	MIN	MAX
A	1.35	1.75	0.054	0.068
A1	0.10	0.25	0.004	0.010
A3	0.19	0.25	0.008	0.010
b	0.35	0.49	0.014	0.019
D	8.55	8.75	0.337	0.344
E	3.80	4.00	0.150	0.157
e	1.27 BSC		0.050 BSC	
H	5.80	6.20	0.228	0.244
h	0.25	0.50	0.010	0.019
L	0.40	1.25	0.016	0.049
M	0 °	7 °	0 °	7 °

SOLDERING FOOTPRINT*

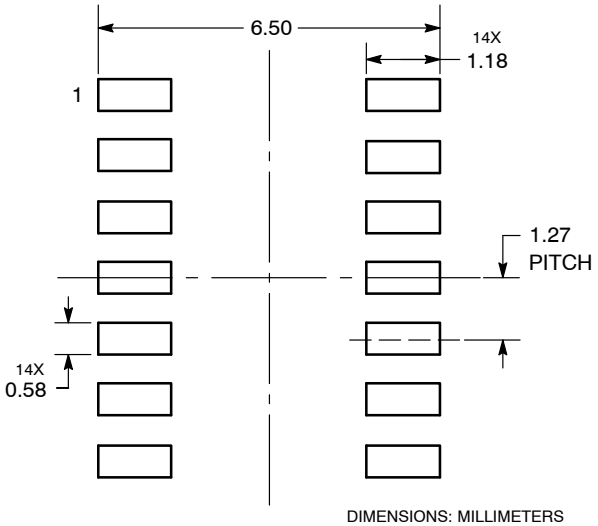

DIMENSIONS: MILLIMETERS

*For additional information on our Pb−Free strategy and soldering details, please download the ON Semiconductor Soldering and Mounting Techniques Reference Manual, SOLDERRM/D.

ON Semiconductor and ON are registered trademarks of Semiconductor Components Industries, LLC (SCILLC). SCILLC owns the rights to a number of patents, trademarks, copyrights, trade secrets, and other intellectual property. A listing of SCILLC's product/patent coverage may be accessed at www.onsemi.com/site/pdf/Patent−Marking.pdf. SCILLC reserves the right to make changes without further notice to any products herein. SCILLC makes no warranty, representation or guarantee regarding the suitability of its products for any particular purpose, nor does SCILLC assume any liability arising out of the application or use of any product or circuit, and specifically disclaims any and all liability, including without limitation special, consequential or incidental damages. "Typical" parameters which may be provided in SCILLC data sheets and/or specifications can and do vary in different applications and actual performance may vary over time. All operating parameters, including "Typicals" must be validated for each customer application by customer's technical experts. SCILLC does not convey any license under its patent rights nor the rights of others. SCILLC products are not designed, intended, or authorized for use as components in systems intended for surgical implant into the body, or other applications intended to support or sustain life, or for any other application in which the failure of the SCILLC product could create a situation where personal injury or death may occur. Should Buyer purchase or use SCILLC products for any such unintended or unauthorized application, Buyer shall indemnify and hold SCILLC and its officers, employees, subsidiaries, affiliates, and distributors harmless against all claims, costs, damages, and expenses, and reasonable attorney fees arising out of, directly or indirectly, any claim of personal injury or death associated with such unintended or unauthorized use, even if such claim alleges that SCILLC was negligent regarding the design or manufacture of the part. SCILLC is an Equal Opportunity/Affirmative Action Employer. This literature is subject to all applicable copyright laws and is not for resale in any manner.

PUBLICATION ORDERING INFORMATION

LITERATURE FULFILLMENT:
Literature Distribution Center for ON Semiconductor
P.O. Box 5163, Denver, Colorado 80217 USA
Phone: 303−675−2175 or 800−344−3860 Toll Free USA/Canada
Fax: 303−675−2176 or 800−344−3867 Toll Free USA/Canada
Email: orderlit@onsemi.com

N. American Technical Support: 800−282−9855 Toll Free USA/Canada
Europe, Middle East and Africa Technical Support:
Phone: 421 33 790 2910
Japan Customer Focus Center
Phone: 81−3−5817−1050

ON Semiconductor Website: **www.onsemi.com**

Order Literature: http://www.onsemi.com/orderlit

For additional information, please contact your local Sales Representative

Looking for pricing, stock, or lifecycle information?

Click below to explore more details on WIN SOURCE:

- View MC74LCX14DR2G on WIN SOURCE
- ON Semiconductor Information

Optimize Your Supply Chain with WIN SOURCE Solutions

- Global Sourcing Solution
- Obsolete Management
- Cost Control Management
- Shortage Management
- Alternative Solution
- Excess Inventory Management