THE DATASHEET OF

PDZ4.7B,115

www.win-source.net 0086-755-83957316

PDZ-B series

Single Zener diodes

Rev. 3 — 5 March 2019 Product data sheet

1. Product profile

1.1. General description

Low-power general purpose voltage regulator diodes in a small plastic SMD SOD323 (SC-76) package.

1.2. Features and benefits

- Total power dissipation: P_{tot} ≤ 400 mW
- Small plastic package suitable for surface mounted design
- Wide variety of voltage ranges: nominal 2.4 V to 36 V (E24 range)
- Tolerance approximately ± 2 %

1.3. Applications

- General voltage regulation

1.4. Quick reference data

Table 1. Quick reference data

Symbol	Parameter	Conditions		Min	Typ	Max	Unit
V_F	forward voltage	I_F = 10 mA	[1]	-	-	0.9	V
P_{tot}	total power dissipation	T_{amb} ≤ 25 °C	[2]	-	-	400	mW

[1] Pulse test: t_p ≤ 300 μs; δ ≤ 0.02.
[2] Device mounted on an FR4 Printed-Circuit Board (PCB), single-sided copper, tin-plated and standard footprint.

nexperia

2. Pinning information

Table 2. Pinning

Pin	Symbol	Description	Simplified outline	Graphic symbol
1	K	cathode[1]	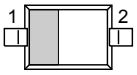	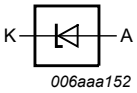
2	A	anode		

[1] The marking bar indicates the cathode.

3. Ordering information

Table 3. Ordering information

Type number	Package		
	Name	Description	Version
PDZ2.4B to PDZ36B[1]	-	plastic surface-mounted package; 2 leads	SOD323

[1] The series consists of 29 types with nominal working voltages from 2.4 V to 36 V.

4. Marking

Table 4. Marking Codes

Type number	Marking Code	Type number	Marking Code	Type number	Marking Code
PDZ2.4B	Z0	PDZ6.2B	ZA	PDZ16B	ZL
PDZ2.7B	Z1	PDZ6.8B	ZB	PDZ18B	ZM
PDZ3.0B	Z2	PDZ7.5B	ZC	PDZ20B	ZN
PDZ3.3B	Z3	PDZ8.2B	ZD	PDZ22B	ZP
PDZ3.6B	Z4	PDZ9.1B	ZE	PDZ24B	ZQ
PDZ3.9B	Z5	PDZ10B	ZF	PDZ27B	ZR
PDZ4.3B	Z6	PDZ11B	ZG	PDZ30B	ZS
PDZ4.7B	Z7	PDZ12B	ZH	PDZ33B	ZT
PDZ5.1B	Z8	PDZ13B	ZJ	PDZ36B	ZU
PDZ5.6B	Z9	PDZ15B	ZK		

All information provided in this document is subject to legal disclaimers.

© Nexperia B.V. 2019. All rights reserved

5. Limiting values

Table 5. Limiting values

In accordance with the Absolute Maximum Rating System (IEC 60134).

Symbol	Parameter	Conditions	Min	Max	Unit
I_F	continuous forward current		-	200	mA
I_{ZSM}	non-repetitive peak reverse current	t_p = 100 µs; square wave; T_{amb} = 25 °C prior to surge	-	see characteristics table	
P_{tot}	total power dissipation	T_{amb} = 25 °C [1]	-	400	mW
T_{stg}	storage temperature		−65	+150	°C
T_j	junction temperature		-	+150	°C

[1] Device mounted on an FR4 PCB, single-sided copper, tin-plated and standard footprint.

6. Thermal characteristics

Table 6. Thermal characteristics

Symbol	Parameter	Conditions	Min	Typ	Max	Unit
$R_{th(j-sp)}$	thermal resistance from junction to solder point	in free air	-	-	130	K/W
$R_{th(j-a)}$	thermal resistance from junction to ambient	[1]	-	-	340	K/W

[1] Device mounted on an FR4 Printed-Circuit Board (PCB),single-sided copper, tin-plated and standard footprint.

7. Characteristics

Table 7. Characteristics

T_j = 25 °C unless otherwise specified.

Symbol	Parameter	Conditions	Min	Typ	Max	Unit
V_F	forward voltage	I_F = 10 mA [1]	-	-	0.9	V
V_F	forward voltage	I_F = 100 mA [1]	-	-	1.1	V

[1] Pulse test: $t_p \leq 300$ µs; $\delta \leq 0.02$.

Table 8. Characteristics per type; PDZ2.4B to PDZ36B

T_j = 25 °C unless otherwise specified.

Type	Working voltage V_Z (V); I_Z = 5 mA		Maximum differential resistance r_{dif} (Ω)		Reverse current I_R (µA)		Temperature coefficient S_Z (mV/K); I_Z = 5 mA	Diode capacitance C_d (pF)[1]	Non-repetitive peak reverse current I_{ZSM} (A)[2]
	Min	Max	I_Z = 0.5 mA	I_Z = 5 mA	Max	V_R (V)	Typ	Max	Max
PDZ2.4B	2.43	2.63	1000	100	50	1.0	−1.6	450	8.0
PDZ2.7B	2.69	2.91	1000	100	20	1.0	−2.0	440	8.0
PDZ3.0B	2.85	3.07	1000	95	10	1.0	−2.1	425	8.0
PDZ3.3B	3.32	3.53	1000	95	5	1.0	−2.4	410	8.0
PDZ3.6B	3.60	3.85	500 @ 1 mA	90	5	1.0	−2.4	390	8.0
PDZ3.9B	3.89	4.16	500 @ 1 mA	90	3	1.0	−2.5	370	8.0
PDZ4.3B	4.17	4.48	600 @ 1 mA	90	3	1.0	−2.5	350	8.0

All information provided in this document is subject to legal disclaimers.

© Nexperia B.V. 2019. All rights reserved

Type	Working voltage V_Z (V); I_Z = 5 mA		Maximum differential resistance r_{dif} (Ω)		Reverse current I_R (μA)		Temperature coefficient S_Z (mV/K); I_Z = 5 mA	Diode capacitance C_d (pF)[1]	Non-repetitive peak reverse current I_{ZSM} (A)[2]
	Min	Max	I_Z = 0.5 mA	I_Z = 5 mA	Max	V_R (V)	Typ	Max	Max
PDZ4.7B	4.55	4.75	600 @ 1 mA	90	2	1.0	−1.4	325	8.0
PDZ5.1B	4.96	5.20	250	60	2	1.5	0.3	300	5.5
PDZ5.6B	5.48	5.73	100	50	1	2.5	1.9	275	5.5
PDZ6.2B	6.06	6.33	80	50	0.5	3.0	2.7	250	5.5
PDZ6.8B	6.65	6.93	60	40	0.5	3.5	3.4	215	5.5
PDZ7.5B	7.28	7.60	60	10	0.5	4.0	4.0	170	3.5
PDZ8.2B	8.02	8.36	60	10	0.5	5.0	4.6	150	3.5
PDZ9.1B	8.85	9.23	60	10	0.5	6.0	5.5	120	3.5
PDZ10B	9.77	10.21	60	10	0.1	7.0	6.4	110	3.5
PDZ11B	10.78	11.22	60	10	0.1	8.0	7.4	108	3.0
PDZ12B	11.74	12.24	80	10	0.1	9.0	8.4	105	3.0
PDZ13B	12.91	13.49	80	10	0.1	10.0	9.4	103	2.5
PDZ15B	14.34	14.98	80	15	0.05	11.0	11.4	99	2.0
PDZ16B	15.85	16.51	80	20	0.05	12.0	12.4	97	1.5
PDZ18B	17.56	18.35	80	20	0.05	13.0	14.4	93	1.5
PDZ20B	19.52	20.39	100	20	0.05	15.0	16.4	88	1.5
PDZ22B	21.54	22.47	100	25	0.05	17.0	18.4	84	1.3
PDZ24B	23.72	24.78	120	30	0.05	19.0	20.4	80	1.3
PDZ27B	26.19	27.53	150	40	0.05	21.0	23.4	73	1.0
PDZ30B	29.19	30.69	200	40	0.05	23.0	26.6	66	1.0
PDZ33B	32.15	33.79	250	40	0.05	25.0	29.7	60	0.9
PDZ36B	35.07	36.87	300	60	0.05	27.0	33.0	59	0.8

[1] f = 1 MHz; V_R = 0 V.
[2] t_p = 100 μs; T_{amb} = 25 °C.

All information provided in this document is subject to legal disclaimers.

© Nexperia B.V. 2019. All rights reserved

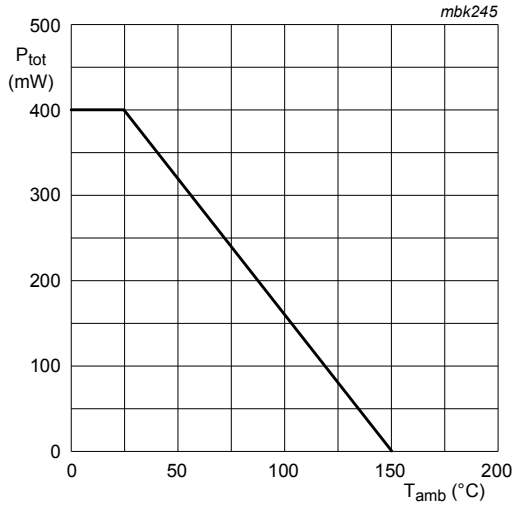

T_j = 25 °C (prior to surge)

Fig. 1. Non-repetitive peak reverse power dissipation as a function of pulse duration; maximum values

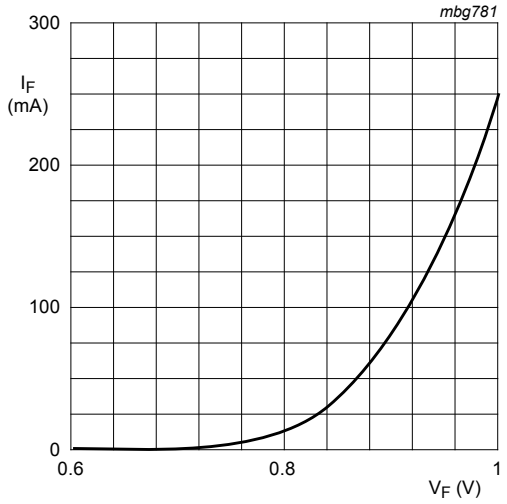

T_j = 25 °C

Fig. 2. Forward current as a function of forward voltage; typical values

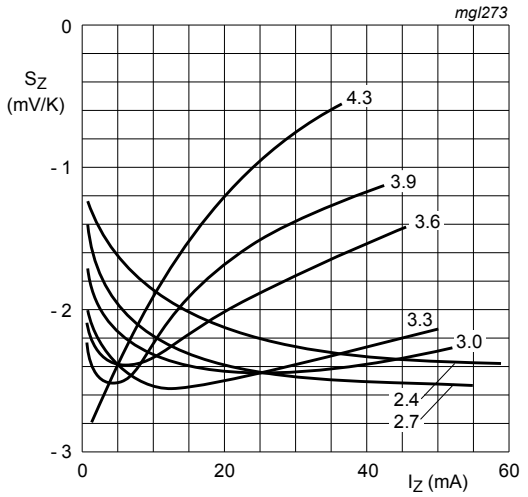

PDZ2.4B to PDZ4.3B

T_j = 25 °C to 150 °C

Fig. 3. Temperature coefficient as a function of working current; typical values

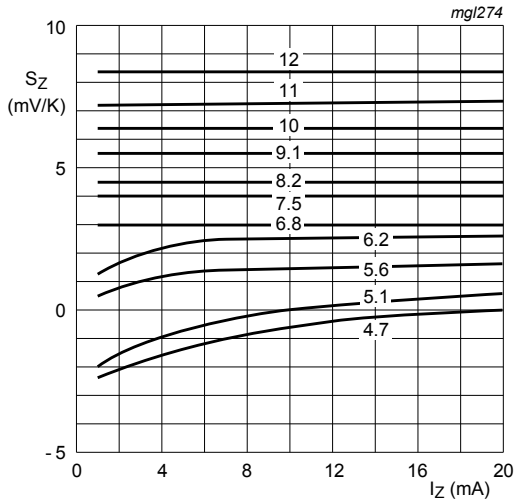

PDZ4.7B to PDZ12B

T_j = 25 °C to 150 °C

Fig. 4. Temperature coefficient as a function of working current; typical values

All information provided in this document is subject to legal disclaimers.

© Nexperia B.V. 2019. All rights reserved

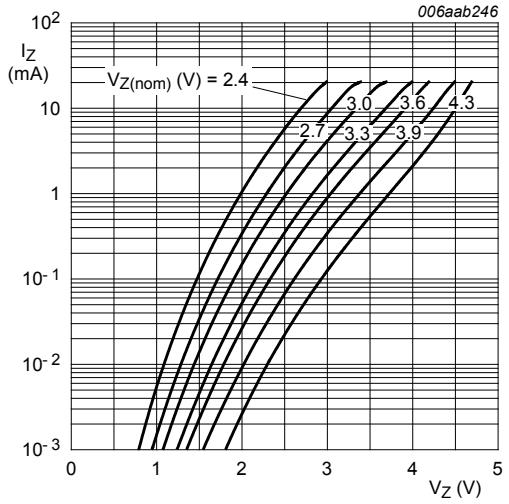

PDZ2.4B to PDZ4.3B

T_j = 25 °C

Fig. 5. Working current as a function of working voltage; typical values

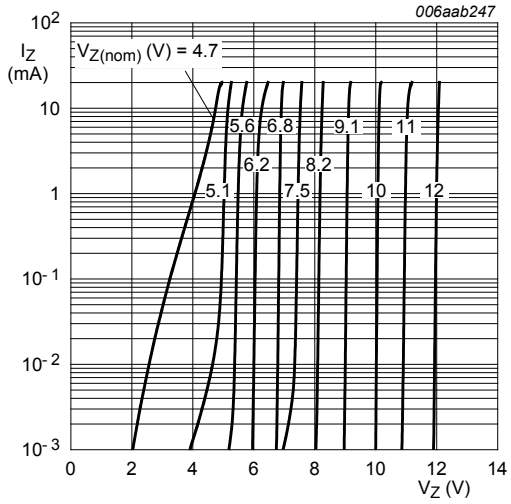

PDZ4.7B to PDZ12B

T_j = 25 °C

Fig. 6. Working current as a function of working voltage; typical values

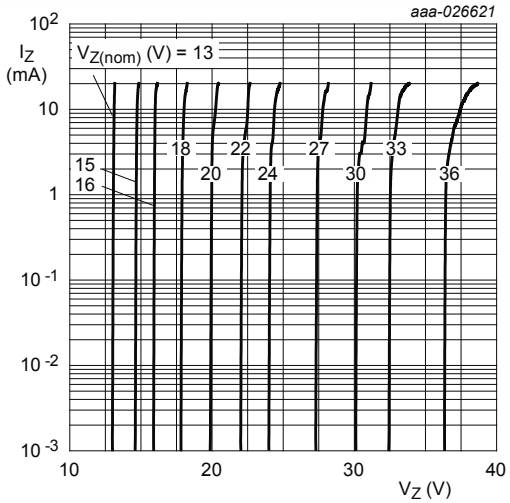

PDZ13B to PDZ36B

T_j = 25 °C

Fig. 7. Working current as a function of working voltage; typical values

8. Test information

Quality information

This product has been qualified in accordance with the Automotive Electronics Council (AEC) standard Q101 - Stress test qualification for discrete semiconductors, and is suitable for use in automotive applications.

All information provided in this document is subject to legal disclaimers.

© Nexperia B.V. 2019. All rights reserved

9. Package outline

Plastic surface-mounted package; 2 leads **SOD323**

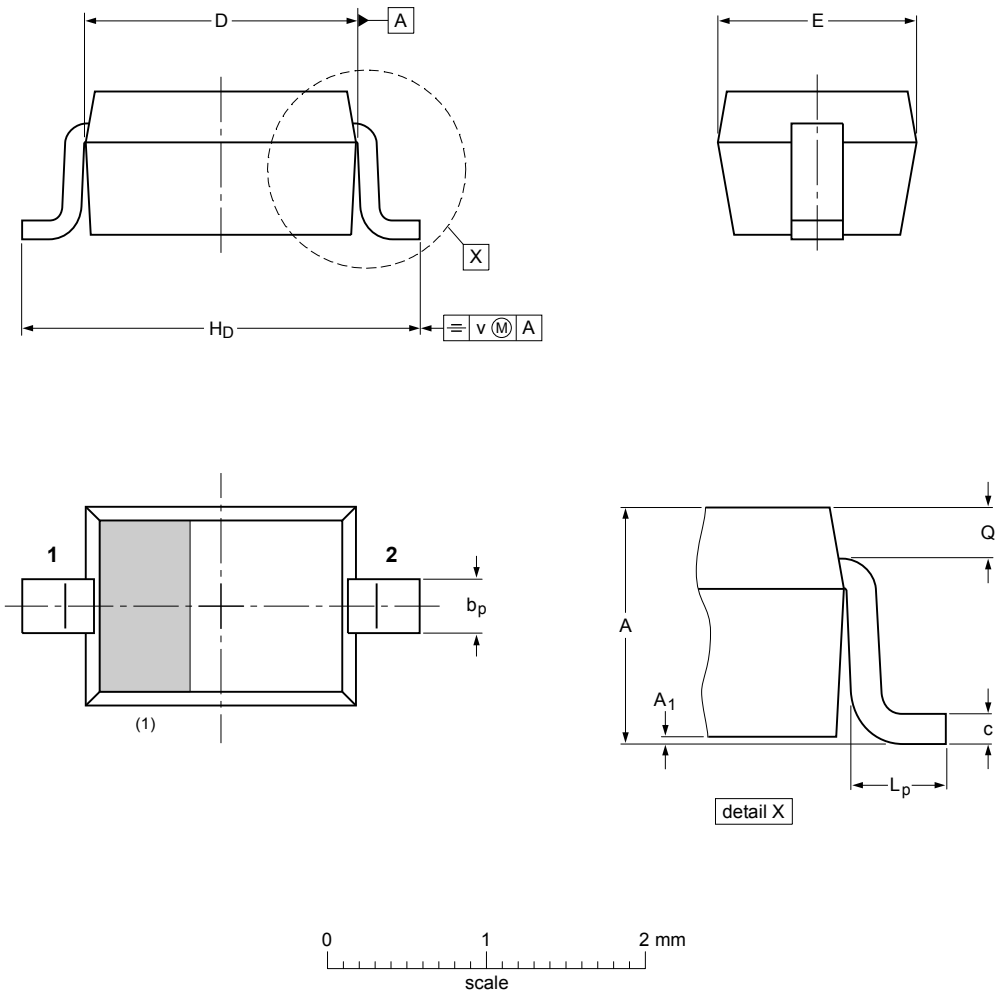

DIMENSIONS (mm are the original dimensions)

UNIT	A	A_1 max	b_p	c	D	E	H_D	L_p	Q	v
mm	1.1 0.8	0.05	0.40 0.25	0.25 0.10	1.8 1.6	1.35 1.15	2.7 2.3	0.45 0.15	0.25 0.15	0.2

Note

1. The marking bar indicates the cathode

OUTLINE VERSION	REFERENCES				EUROPEAN PROJECTION	ISSUE DATE
	IEC	JEDEC	JEITA			
SOD323			SC-76			~~03-12-17~~ 06-03-16

Fig. 8. Package outline SOD323

All information provided in this document is subject to legal disclaimers.

© Nexperia B.V. 2019. All rights reserved

10. Soldering

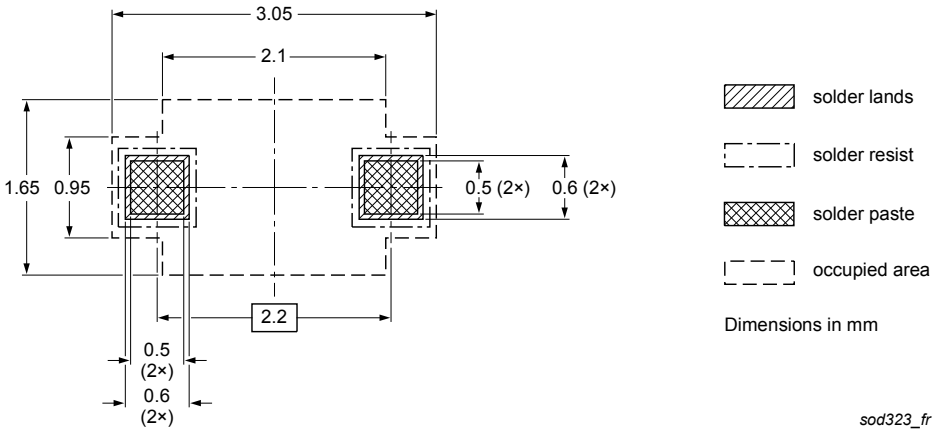

Fig. 9. Reflow soldering footprint SOD323

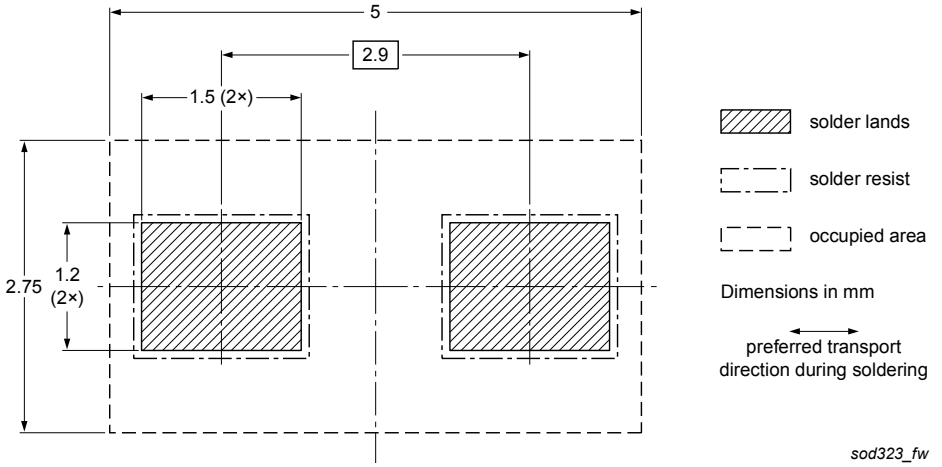

Fig. 10. Wave soldering footprint SOD323

All information provided in this document is subject to legal disclaimers.

© Nexperia B.V. 2019. All rights reserved

11. Revision history

Table 9. Revision history

Document ID	Release date	Data sheet status	Change notice	Supersedes
PDZ-B_SER v.3	20190305	Product data sheet	-	PDZ-B_SER v.2
Modifications:	• The format of this data sheet has been redesigned to comply with the identity guidelines of Nexperia. • Legal texts have been adapted to the new company name where appropriate.			
PDZ-B_SER v.2	20040322	Product data sheet	-	PDZ-B_SER v.1
PDZ-B_SER v.1	20020218	Product data sheet	-	-

All information provided in this document is subject to legal disclaimers.

© Nexperia B.V. 2019. All rights reserved

12. Legal information

Data sheet status

Document status [1][2]	Product status [3]	Definition
Objective [short] data sheet	Development	This document contains data from the objective specification for product development.
Preliminary [short] data sheet	Qualification	This document contains data from the preliminary specification.
Product [short] data sheet	Production	This document contains the product specification.

[1] Please consult the most recently issued document before initiating or completing a design.
[2] The term 'short data sheet' is explained in section "Definitions".
[3] The product status of device(s) described in this document may have changed since this document was published and may differ in case of multiple devices. The latest product status information is available on the internet at https://www.nexperia.com.

Definitions

Draft — The document is a draft version only. The content is still under internal review and subject to formal approval, which may result in modifications or additions. Nexperia does not give any representations or warranties as to the accuracy or completeness of information included herein and shall have no liability for the consequences of use of such information.

Short data sheet — A short data sheet is an extract from a full data sheet with the same product type number(s) and title. A short data sheet is intended for quick reference only and should not be relied upon to contain detailed and full information. For detailed and full information see the relevant full data sheet, which is available on request via the local Nexperia sales office. In case of any inconsistency or conflict with the short data sheet, the full data sheet shall prevail.

Product specification — The information and data provided in a Product data sheet shall define the specification of the product as agreed between Nexperia and its customer, unless Nexperia and customer have explicitly agreed otherwise in writing. In no event however, shall an agreement be valid in which the Nexperia product is deemed to offer functions and qualities beyond those described in the Product data sheet.

Disclaimers

Limited warranty and liability — Information in this document is believed to be accurate and reliable. However, Nexperia does not give any representations or warranties, expressed or implied, as to the accuracy or completeness of such information and shall have no liability for the consequences of use of such information. Nexperia takes no responsibility for the content in this document if provided by an information source outside of Nexperia.

In no event shall Nexperia be liable for any indirect, incidental, punitive, special or consequential damages (including - without limitation - lost profits, lost savings, business interruption, costs related to the removal or replacement of any products or rework charges) whether or not such damages are based on tort (including negligence), warranty, breach of contract or any other legal theory.

Notwithstanding any damages that customer might incur for any reason whatsoever, Nexperia's aggregate and cumulative liability towards customer for the products described herein shall be limited in accordance with the Terms and conditions of commercial sale of Nexperia.

Right to make changes — Nexperia reserves the right to make changes to information published in this document, including without limitation specifications and product descriptions, at any time and without notice. This document supersedes and replaces all information supplied prior to the publication hereof.

Suitability for use in automotive applications — This Nexperia product has been qualified for use in automotive applications. Unless otherwise agreed in writing, the product is not designed, authorized or warranted to be suitable for use in life support, life-critical or safety-critical systems or equipment, nor in applications where failure or malfunction of an Nexperia product can reasonably be expected to result in personal injury, death or severe property or environmental damage. Nexperia and its suppliers accept no liability for inclusion and/or use of Nexperia products in such equipment or applications and therefore such inclusion and/or use is at the customer's own risk.

Quick reference data — The Quick reference data is an extract of the product data given in the Limiting values and Characteristics sections of this document, and as such is not complete, exhaustive or legally binding.

Applications — Applications that are described herein for any of these products are for illustrative purposes only. Nexperia makes no representation or warranty that such applications will be suitable for the specified use without further testing or modification.

Customers are responsible for the design and operation of their applications and products using Nexperia products, and Nexperia accepts no liability for any assistance with applications or customer product design. It is customer's sole responsibility to determine whether the Nexperia product is suitable and fit for the customer's applications and products planned, as well as for the planned application and use of customer's third party customer(s). Customers should provide appropriate design and operating safeguards to minimize the risks associated with their applications and products.

Nexperia does not accept any liability related to any default, damage, costs or problem which is based on any weakness or default in the customer's applications or products, or the application or use by customer's third party customer(s). Customer is responsible for doing all necessary testing for the customer's applications and products using Nexperia products in order to avoid a default of the applications and the products or of the application or use by customer's third party customer(s). Nexperia does not accept any liability in this respect.

Limiting values — Stress above one or more limiting values (as defined in the Absolute Maximum Ratings System of IEC 60134) will cause permanent damage to the device. Limiting values are stress ratings only and (proper) operation of the device at these or any other conditions above those given in the Recommended operating conditions section (if present) or the Characteristics sections of this document is not warranted. Constant or repeated exposure to limiting values will permanently and irreversibly affect the quality and reliability of the device.

Terms and conditions of commercial sale — Nexperia products are sold subject to the general terms and conditions of commercial sale, as published at http://www.nexperia.com/profile/terms, unless otherwise agreed in a valid written individual agreement. In case an individual agreement is concluded only the terms and conditions of the respective agreement shall apply. Nexperia hereby expressly objects to applying the customer's general terms and conditions with regard to the purchase of Nexperia products by customer.

No offer to sell or license — Nothing in this document may be interpreted or construed as an offer to sell products that is open for acceptance or the grant, conveyance or implication of any license under any copyrights, patents or other industrial or intellectual property rights.

Export control — This document as well as the item(s) described herein may be subject to export control regulations. Export might require a prior authorization from competent authorities.

Translations — A non-English (translated) version of a document is for reference only. The English version shall prevail in case of any discrepancy between the translated and English versions.

Trademarks

Notice: All referenced brands, product names, service names and trademarks are the property of their respective owners.

All information provided in this document is subject to legal disclaimers.

© Nexperia B.V. 2019. All rights reserved

Contents

1. Product profile.....1
1.1. General description.....1
1.2. Features and benefits.....1
1.3. Applications.....1
1.4. Quick reference data.....1
2. Pinning information.....2
3. Ordering information.....2
4. Marking.....2
5. Limiting values.....3
6. Thermal characteristics.....3
7. Characteristics.....3
8. Test information.....6
9. Package outline.....7
10. Soldering.....8
11. Revision history.....9
12. Legal information.....10

© Nexperia B.V. 2019. All rights reserved

For more information, please visit: http://www.nexperia.com
For sales office addresses, please send an email to: salesaddresses@nexperia.com
Date of release: 5 March 2019

Looking for pricing, stock, or lifecycle information?

Click below to explore more details on WIN SOURCE:

- View PDZ4.7B,115 on WIN SOURCE
- NXP / Nexperia Information

Optimize Your Supply Chain with WIN SOURCE Solutions

- Global Sourcing Solution
- Obsolete Management
- Cost Control Management
- Shortage Management
- Alternative Solution
- Excess Inventory Management