THE DATASHEET OF

PMV60EN

www.win-source.net 0086-755-83957316

MP3301

1.3MHz, 700mA, Fixed-Frequency Step-Up Driver for up to 10 White LEDS

The Future of Analog IC Technology®

DESCRIPTION

The MP3301 is a step-up converter designed to drive WLEDS arrays from a single-cell, lithium-ion battery. The MP3301 uses a current-mode, fixed-frequency architecture to regulate the LED current, which is measured through an external current sense resistor. Its low 200mV feedback voltage reduces power loss and improves efficiency. The MP3301 turns off in the presence of an open-circuit over-voltage condition.

The MP3301 includes under-voltage lockout, current limiting, and thermal-overload protection to prevent damage in the event of an output overload.

The MP3301 is available in a small 5-pin TSOT23 package.

FEATURES

- Internal Power MOSFET
- Drives up to 10 White LEDs in Series
- Up to 89% Efficiency
- PWM and Analog Dimming
- 1.3MHz Fixed Switching Frequency
- Low 200mV Feedback Voltage
- Internal 700mA Current Limit
- Open-Load Shutdown
- UVLO, Thermal Shutdown
- Available in TSOT23-5 Packages

APPLICATIONS

- Smart Phones
- Digital Still Cameras
- Small LCDs

All MPS parts are lead-free and adhere to the RoHS directive. For MPS green status, please visit MPS website under Quality Assurance. "Monolithic Power Systems", "MPS", and "The Future of Analog IC Technology" are Registered Trademarks of Monolithic Power Systems, Inc.

TYPICAL APPLICATION

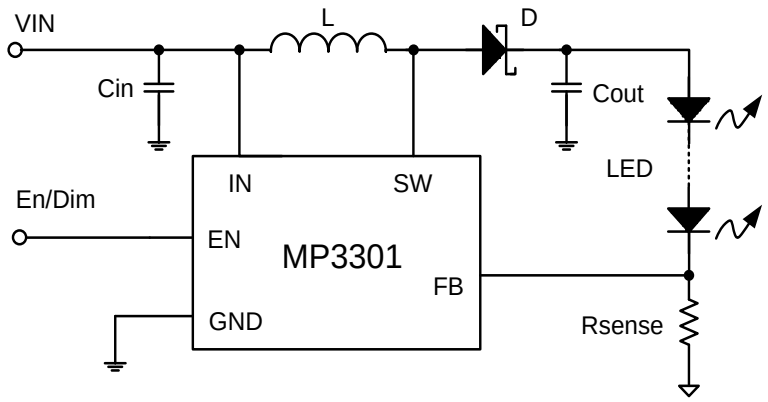

MPS Proprietary Information. Patent Protected. Unauthorized Photocopy and Duplication Prohibited.
© 2013 MPS. All Rights Reserved.

ORDERING INFORMATION

Part Number	Package
MP3301GJ*	TSOT23-5

* For Tape & Reel, add suffix –Z (e.g. MP3301GJ–Z);

PACKAGE REFERENCE

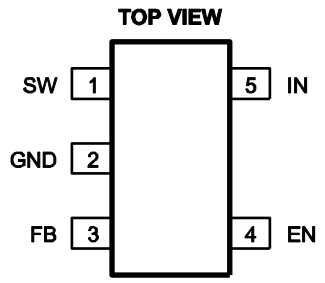

TSOT23-5

ABSOLUTE MAXIMUM RATINGS (1)

SW Pin ..... –0.5V to +44V
All Other Pins..... –0.3V to +6.5V
Continuous Power Dissipation .. (T_A = +25°C) (2)
TSOT23-5.....0.57W
Storage Temperature..... –55°C to +150°C

Recommended Operating Conditions (3)

IN Supply Voltage ..... 2.5V to 6V
SW Pin ..... V_{IN} to 36V
Operating Junction Temp. (T_J).....–40°C to +125°C

Thermal Resistance (4)

	θ_{JA}	θ_{JC}	
TSOT23-5	220	110	°C/W

Notes:

1) Exceeding these ratings may damage the device.
2) The maximum allowable power dissipation is a function of the maximum junction temperature T_J (MAX), the junction-to-ambient thermal resistance θ_{JA}, and the ambient temperature T_A. The maximum allowable continuous power dissipation at any ambient temperature is calculated by P_D (MAX) = (T_J (MAX)-T_A)/θ_{JA}. Exceeding the maximum allowable power dissipation will cause excessive die temperature, and the regulator will go into thermal shutdown. Internal thermal shutdown circuitry protects the device from permanent damage.
3) The device is not guaranteed to function outside of its operating conditions.
4) Measured on approximately 1” square of 1 oz copper.

MPS Proprietary Information. Patent Protected. Unauthorized Photocopy and Duplication Prohibited.
© 2013 MPS. All Rights Reserved.

ELECTRICAL CHARACTERISTICS

V_{IN} = V_{EN} = 5V, T_A = +25°C, unless otherwise noted.

Parameters	Symbol	Condition	Min	Typ	Max	Units
Operating Input Voltage	V_{IN}		2.5		6	V
Supply Current (Shutdown)		V_{EN} = 0V			10	µA
Supply Current (Quiescent)		V_{FB} = 0.15V			900	µA
Switching Frequency	f_{SW}		1.0	1.3	1.5	MHz
Maximum Duty Cycle		V_{FB} = 0V	92			%
Under Voltage Lockout						
IN Under-Voltage Lockout	UVLO	V_{IN} Rising		2.25	2.45	V
Under-Voltage Lockout Hysteresis				92		mV
Open-Lamp Shutdown Threshold	V_{OV}	V_{OV} Rising	40	42	44	V
Enable						
EN OFF Threshold		V_{EN} Falling	0.4			V
EN ON Threshold		V_{EN} Rising			0.6	V
Minimum EN Dimming Threshold		V_{FB} = 0V	0.655	0.7	0.845	V
Maximum EN Dimming Threshold		V_{FB} = 0.2V	1.275	1.4	1.425	V
Feedback						
FB Voltage		V_{EN} = 1.5V		200		mV
FB Input Bias Current		V_{FB} = 0.1V	-600			nA
Output Switch						
SW On-Resistance (5)	R_{ON}			0.5		Ω
SW Current Limit (5)		Duty Cycle = 60%		1.0		A
Thermal Shutdown (5)				150		°C

Notes:

5) Guaranteed by design.

MPS Proprietary Information. Patent Protected. Unauthorized Photocopy and Duplication Prohibited.
© 2013 MPS. All Rights Reserved.

PIN FUNCTIONS

Pin #	Name	Pin Function
1	SW	Power Switch Output. SW is the drain of the internal MOSFET switch. Connect the power inductor and output rectifier to SW. SW can swing between GND and 36V.
2	GND	Ground. Connect exposed pad to GND plane for improved thermal performance.
3	FB	Feedback Input. Used to regulate the voltage across the current-sense resistor between FB and GND. Connect a current-sense resistor from the bottom of the LED string to GND. Connect the bottom of the LED string to FB. The regulation voltage is 200mV.
4	EN	ON/OFF Control and Dimming Command Input. A > 0.6V turns the part on, and < 0.4V turns the part off. If the EN pin voltage is between 0.7V and 1.4V, V_{FB} is regulated between 0V and 200mV. To use PWM dimming, apply a 200Hz-to-1kHz square wave signal with an amplitude >1.5V.
5	IN	Input Supply Pin. Requires local bypassing.

MPS Proprietary Information. Patent Protected. Unauthorized Photocopy and Duplication Prohibited.
© 2013 MPS. All Rights Reserved.

TYPICAL PERFORMANCE CHARACTERISTICS

V_{IN} = 3.8V, V_{EN}=3.3V, 8 WLEDs in series, 20mA, unless otherwise noted.

Efficiency

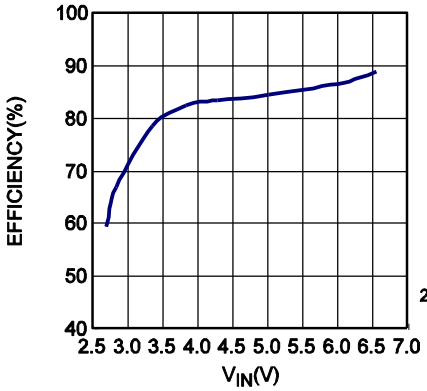

Steady State

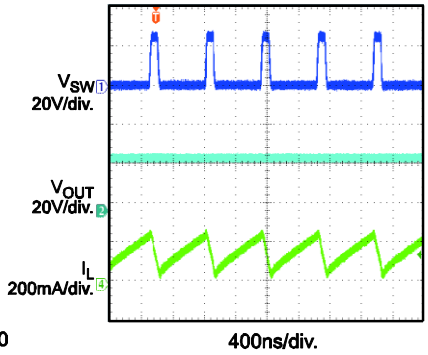

EN Startup

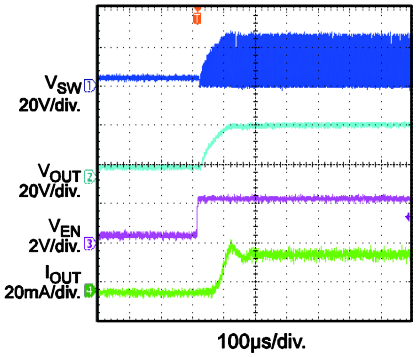

EN Shutdown

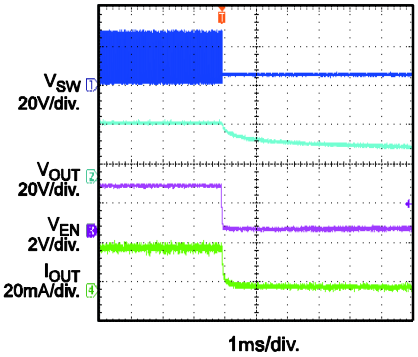

Startup into open

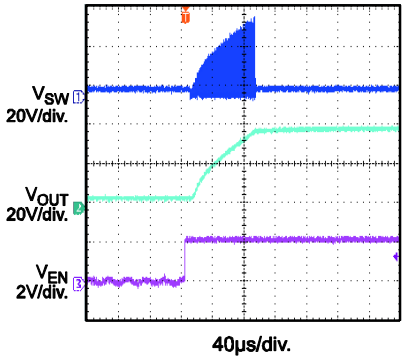

PWM DIM

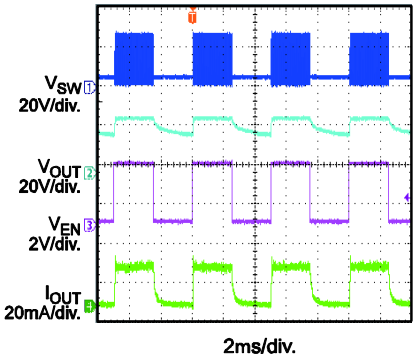

Analog DIM Curve

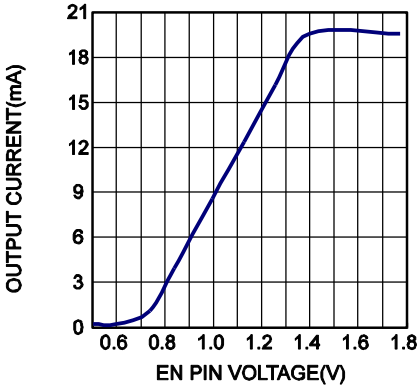

PWM Dim Curve

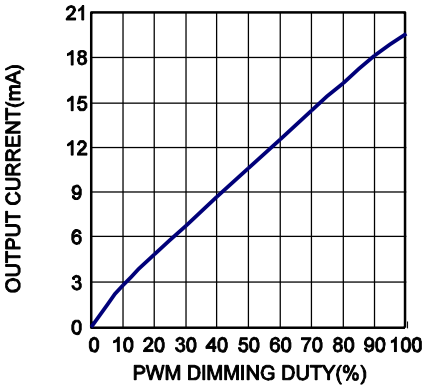

MPS Proprietary Information. Patent Protected. Unauthorized Photocopy and Duplication Prohibited.
© 2013 MPS. All Rights Reserved.

OPERATION

The MP3301 uses a constant-frequency, peak-current–mode, boost-regulator architecture to regulate up to 10 white LEDs in series. Figure 1 shows how the MP3301 operates.

The MP3301 regulates the SW voltage through the feedback voltage and the 1.3MHz oscillator. At the start of each oscillator cycle, the control circuitry turns the FET on. A stabilizing ramp added to the output of the current sense amplifier prevents sub-harmonic oscillations at duty cycles >50%: The ramp output goes to the positive input of the PWM comparator: When this voltage equals the error amplifier output (the amplified difference between the 200mV reference voltage and the feedback voltage), the power FET turns off.

When the feedback voltage starts to drop, the output of the error amplifier increases, thus increasing the current flowing through the power FET. The increased FET power results in increased power delivered to the output.

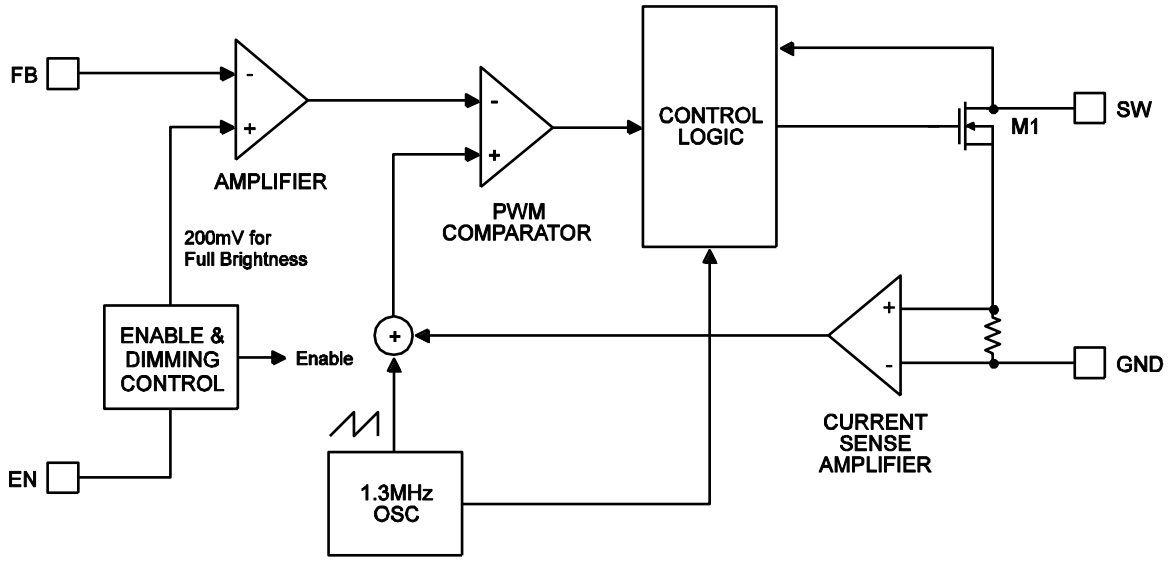

Figure 1: Functional Block Diagram

MPS Proprietary Information. Patent Protected. Unauthorized Photocopy and Duplication Prohibited.
© 2013 MPS. All Rights Reserved.

APPLICATION INFORMATION

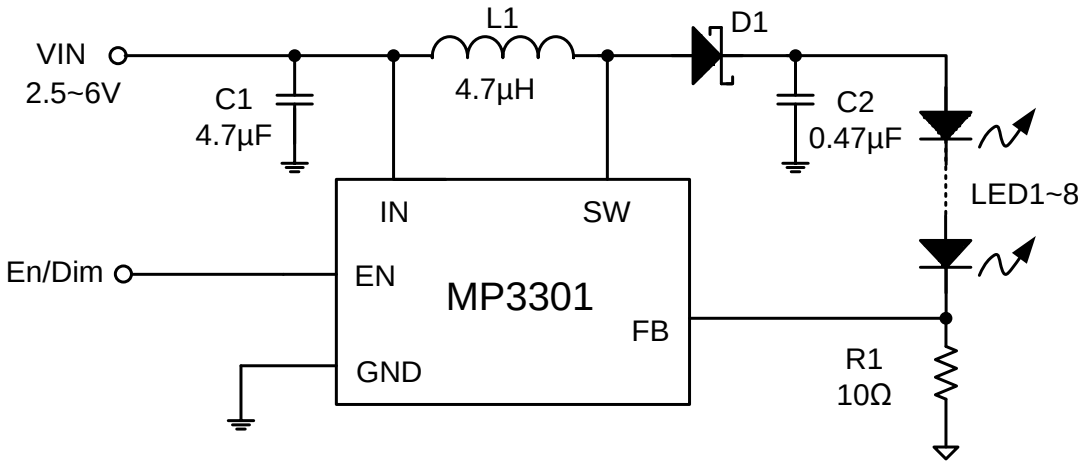

Figure 2: Circuit to Drive 8 WLEDs in Series

Figure 2 shows a typical application circuit. The 8 white LEDs can be driven from a 2.7V-to-6V supply range at an output current of 20mA. A 0.47µF output capacitor is sufficient for most applications. A 4.7µH inductor with low direct-current resistance (DCR) improves efficiency, while a 4.7µF ceramic capacitor improves input stability. Use Schottky diodes with fast recovery times and low forward voltages, preferably rated at 500mA. The MP3301 has an internal soft-start to limit the current through VIN at startup and to also limit the output overshoot.

The ramped voltage at the current sense amplifier reduces the current output as the duty cycle increases. Adding more LEDs increases the output voltage but reduces the current delivered to the load.

Setting the LED Current

The feedback resistor, R1, controls the LED current. The equation $\frac{200mV}{R1}$ estimates the current through the LEDs. Table 1 shows the resistor selection for a given LED current.

Table 1: I_{LED} vs. R1

I_{LED} (mA)	R1 (Ω)
1	200
5	40
10	20
20	10
60	3.33

MPS Proprietary Information. Patent Protected. Unauthorized Photocopy and Duplication Prohibited.
© 2013 MPS. All Rights Reserved.

LED Current Programming

Applying a DC voltage between 0.7V and 1.4V to EN pin programs a feedback voltage between 0V and 200mV for analog dimming of LED current. Locally bypass the DC dimming voltage to limit noise on the feedback reference.

PWM Dimming

Apply a 200Hz-to-1kHz square waveform to the EN pin to implement PWM dimming. Use a PWM amplitude of at least 1.5V.

For high-frequency PWM dimming (>1kHz), implement the dimming control shown in Figure 3. Select the RC filter's cut-off frequency $\leqslant \frac{f_{PWM}}{10}$. For example, for a PWM frequency of 20kHz, use a 20kΩ resistor and 100nF capacitor. Then

$$V_{EN} = V_{PWM_high} \times D_{PWM}$$

Where V_{EN} is the EN pin's DC voltage V_{PWM_high} is the PWM high level voltage, and D_{PWM} is the PWM duty cycle. A DC voltage from 0.7V to 1.4V programs the output current from 0% to 100%.

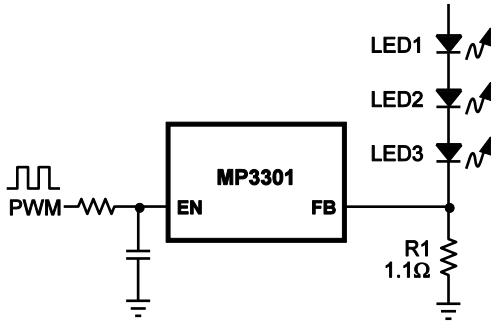

Figure 3: Control Circuit for High-Frequency PWM Dimming

Open-Load Protection

Open-load protection shuts off the MP3301 if the output voltage goes too high. In cases where an LED may fail, this results in a zero feedback voltage. The part runs at the maximum duty cycle to continue increasing the output voltage. If the output exceeds 42V, the MP3301 will shut down. The part will not switch on again until the device undergoes a power cycle.

Layout Considerations

PCB layout requires care to prevent noise and electromagnetic interference from the high-frequency switching paths. Make the current loop from the IC, output diode, and the output capacitor as short as possible.

Locally bypass the IN pin, and use an RC filter when possible to eliminate noise on the IN pin. See Figure 4 for an implementation example.

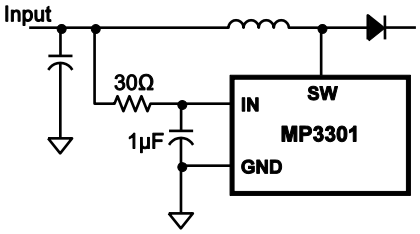

Figure 4: Input Bias Filtering

MPS Proprietary Information. Patent Protected. Unauthorized Photocopy and Duplication Prohibited.
© 2013 MPS. All Rights Reserved.

TYPICAL APPLICATION CIRCUITS

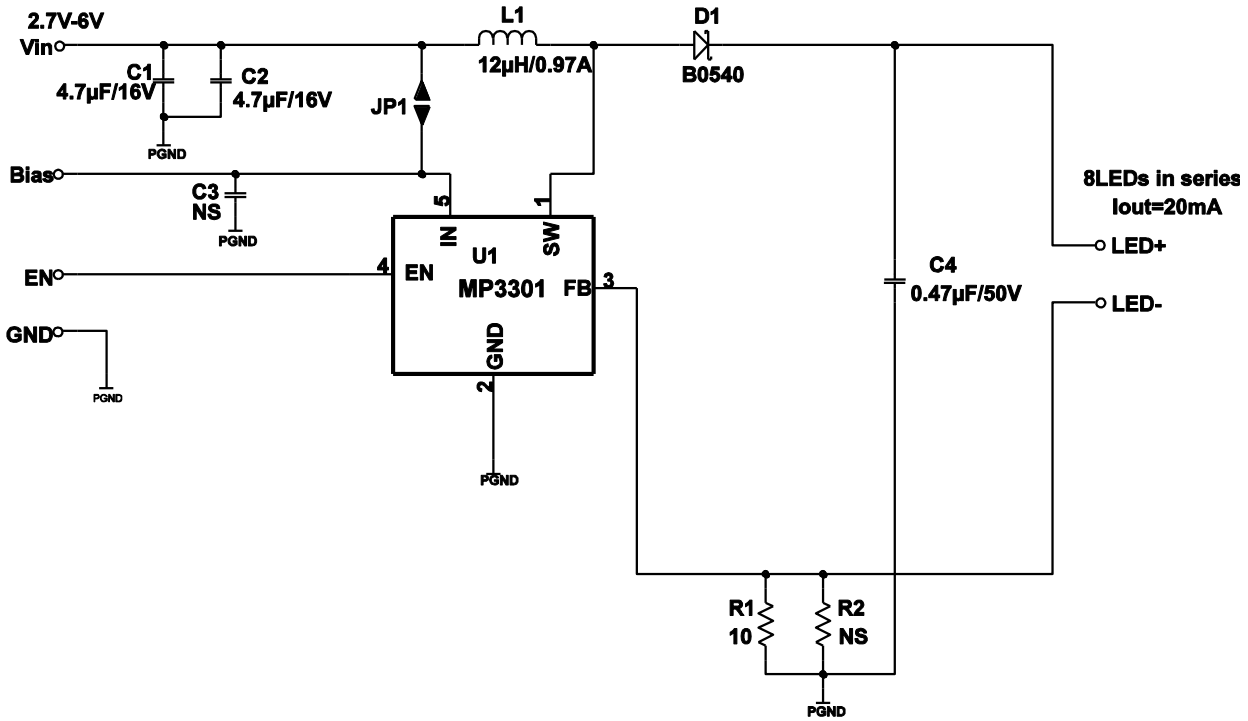

Figure 5: Circuit to Drive 8 WLEDs in Series with a 2.7V-to-6V Input Voltage

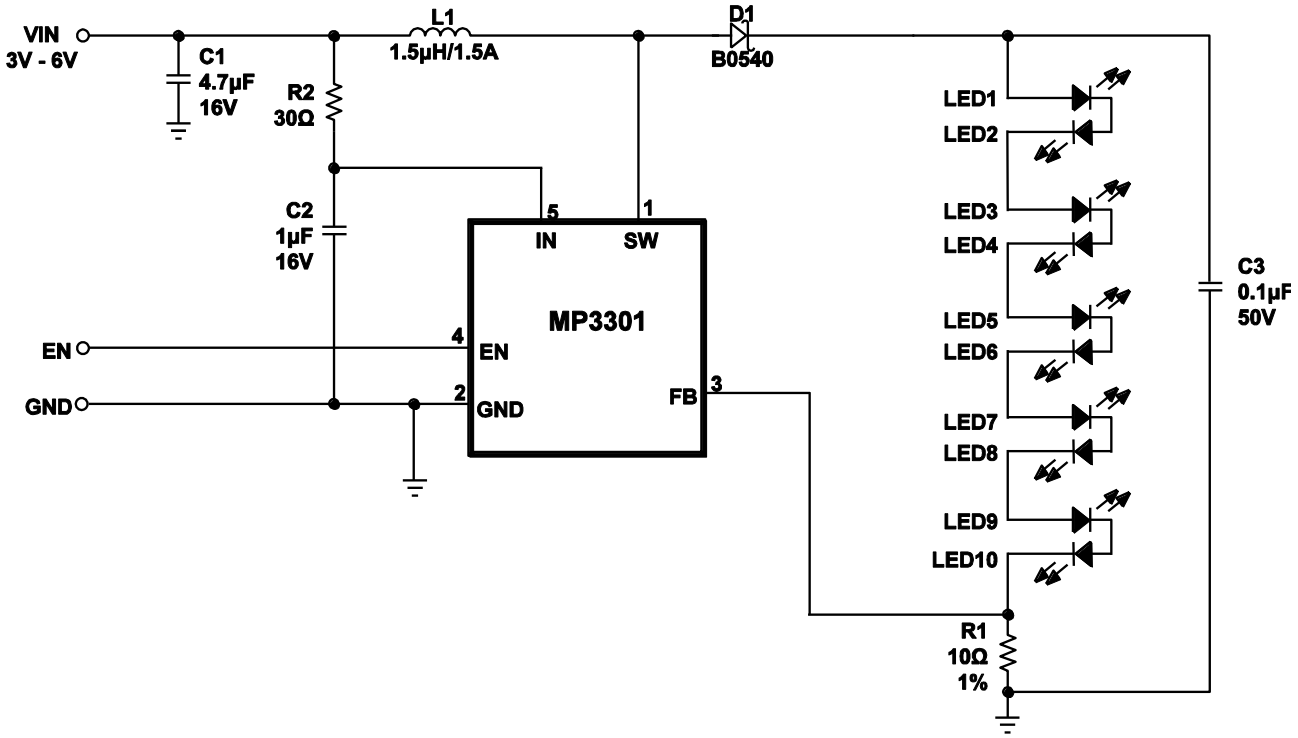

Figure 6: Circuit to Drive 10 WLEDs in Series with a 3V-to-6V Input Voltage

MPS Proprietary Information. Patent Protected. Unauthorized Photocopy and Duplication Prohibited.
© 2013 MPS. All Rights Reserved.

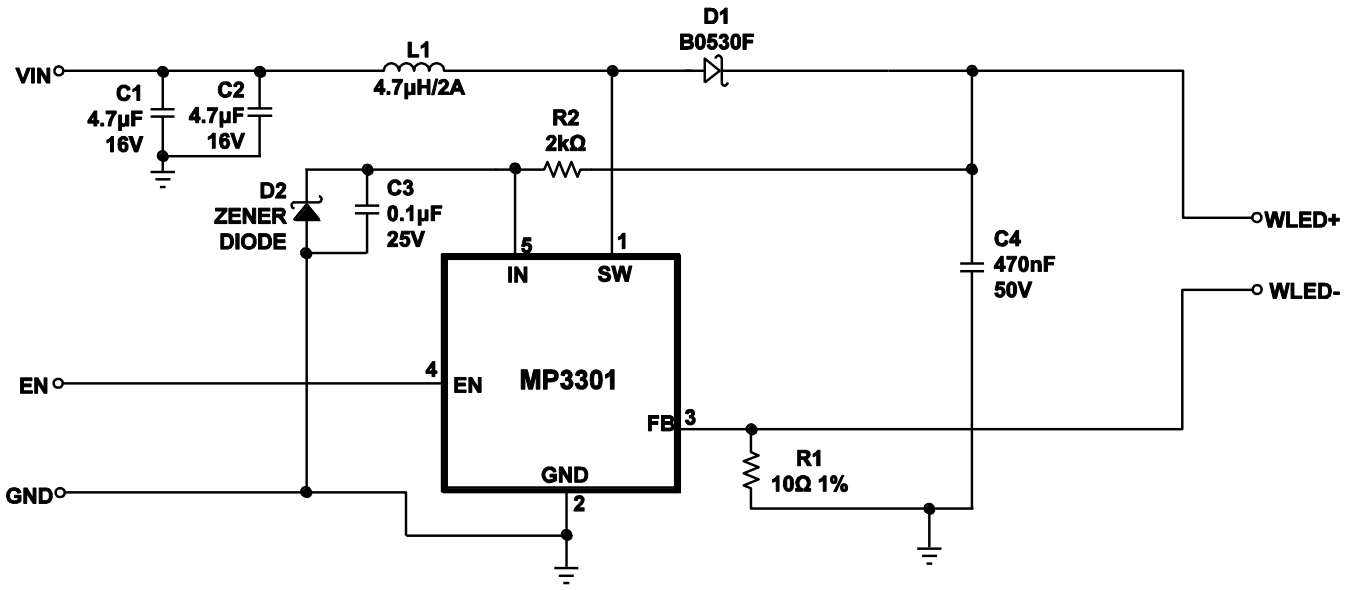

Figure 7: Circuit to Drive 10 WLEDs in Series with <3V Input Voltage

Use the additional bias circuit to improve the MOSFET ON-resistance at low input voltage.

MPS Proprietary Information. Patent Protected. Unauthorized Photocopy and Duplication Prohibited.
© 2013 MPS. All Rights Reserved.

PACKAGE INFORMATION

TSOT23-5

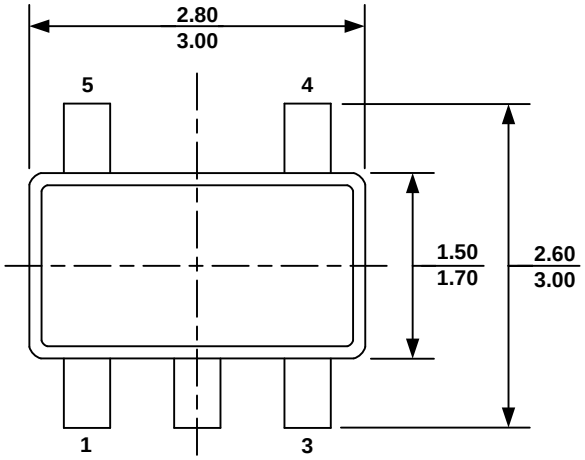

TOP VIEW

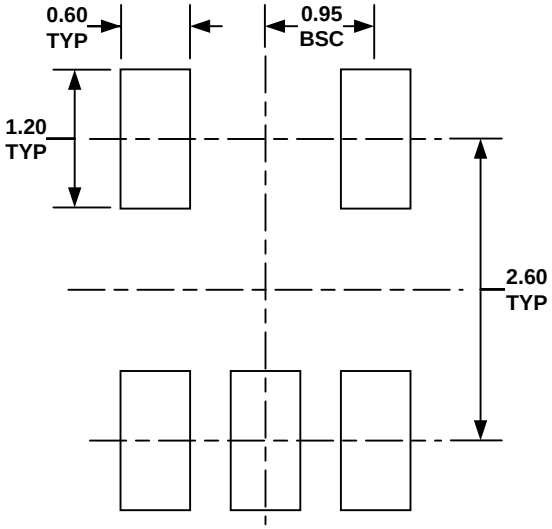

RECOMMENDED LAND PATTERN

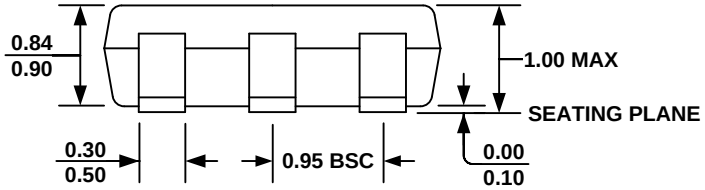

FRONT VIEW

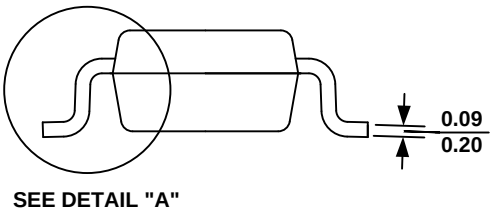

SIDE VIEW

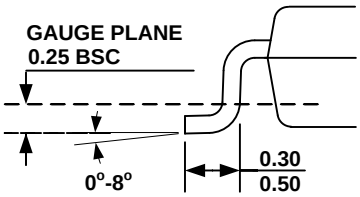

DETAIL "A"

NOTE:

1) ALL DIMENSIONS ARE IN MILLIMETERS.
2) PACKAGE LENGTH DOES NOT INCLUDE MOLD FLASH, PROTRUSION OR GATE BURR.
3) PACKAGE WIDTH DOES NOT INCLUDE INTERLEAD FLASH OR PROTRUSION.
4) LEAD COPLANARITY (BOTTOM OF LEADS AFTER FORMING) SHALL BE 0.10 MILLIMETERS MAX.
5) DRAWING CONFORMS TO JEDEC MO-193, VARIATION AA.
6) DRAWING IS NOT TO SCALE.

NOTICE: The information in this document is subject to change without notice. Users should warrant and guarantee that third party Intellectual Property rights are not infringed upon when integrating MPS products into any application. MPS will not assume any legal responsibility for any said applications.

© 2013 MPS. All Rights Reserved.

Looking for pricing, stock, or lifecycle information?

Click below to explore more details on WIN SOURCE:

- View PMV60EN on WIN SOURCE
- NXP / Nexperia Information

Optimize Your Supply Chain with WIN SOURCE Solutions

- Global Sourcing Solution
- Obsolete Management
- Cost Control Management
- Shortage Management
- Alternative Solution
- Excess Inventory Management