THE DATASHEET OF

SN75ALS181NSR

www.win-source.net 0086-755-83957316

DIFFERENTIAL DRIVER AND RECEIVER PAIR

Check for Samples: SN75ALS181

FEATURES

- **Meets TIA/EIA-422-B, TIA/EIA-485-A, and CCITT Recommendations V.11 and X.27**
- **Low Supply-Current Requirements... 30 mA Max**
- **Driver Output Capacity...±60 mA**
- **Thermal Shutdown Protection**
- **Driver Common-Mode Output Voltage Range of –7 V to 12 V**
- **Receiver Input Impedance...12 kΩ Min**
- **Receiver Input Sensitivity...±200 mV**
- **Receiver Input Hysteresis...60 mV Typ**
- **Receiver Common-Mode Input Voltage Range of ±12 V**
- **Operates From Single 5-V Supply**
- **Glitch-Free Power-Up and Power-Down Protection**

DESCRIPTION

The SN75ALS181 is a differential driver and receiver pair designed for bidirectional data communication on multipoint bus transmission lines. The design provides for balanced transmission lines and meets TIA/EIA-422-B and TIA/EIA-485-A, and CCITT recommendations V.10, V.11, X.26, and X.27.

The SN75ALS181 combines a 3-state differential line driver and a differential-input line receiver that operate from a single 5-V power supply. The driver and receiver have active-high and active-low enables, respectively, that can be connected together externally to function as a direction control. The driver differential outputs and the receiver differential inputs are connected to separate pins for greater flexibility and are designed to offer minimum loading to the bus when the driver is disabled or V_{CC} = 0. These ports feature wide positive and negative common-mode voltage changes, making the device suitable for party-line applications.

N OR NS PACKAGE
(TOP VIEW)

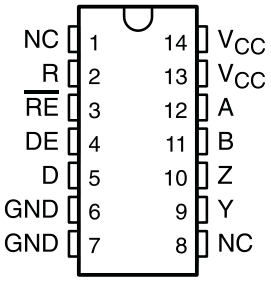

N.C. – No internal connection

Please be aware that an important notice concerning availability, standard warranty, and use in critical applications of Texas Instruments semiconductor products and disclaimers thereto appears at the end of this data sheet.

PRODUCTION DATA information is current as of publication date. Products conform to specifications per the terms of the Texas Instruments standard warranty. Production processing does not necessarily include testing of all parameters.

Copyright © 1992–2013, Texas Instruments Incorporated

FUNCTION TABLES

Each Driver

INPUTS D	ENABLE DE	OUTPUTS	
		Y	Z
H	H	H	L
L	H	L	H
X	L	Z	Z

Each Receiver(1)

DIFFERENTIAL A–B	ENABLE $\overline{RE}$	OUTPUT R
$V_{ID} \geq 0.2$ V	L	H
-0.2 V $< V_{ID} < 0.2$ V	L	?
$V_{ID} \leq -0.2$ V	L	L
X	H	Z

(1) H = high level, L = low level, ? = indeterminate, X = irrelevant, Z = high impedance (off)

LOGIC DIAGRAM (POSITIVE LOGIC)

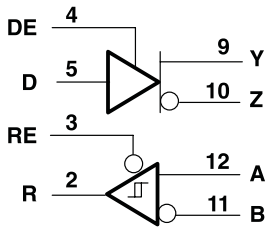

Copyright © 1992–2013, Texas Instruments Incorporated

SCHEMATICS OF INPUTS

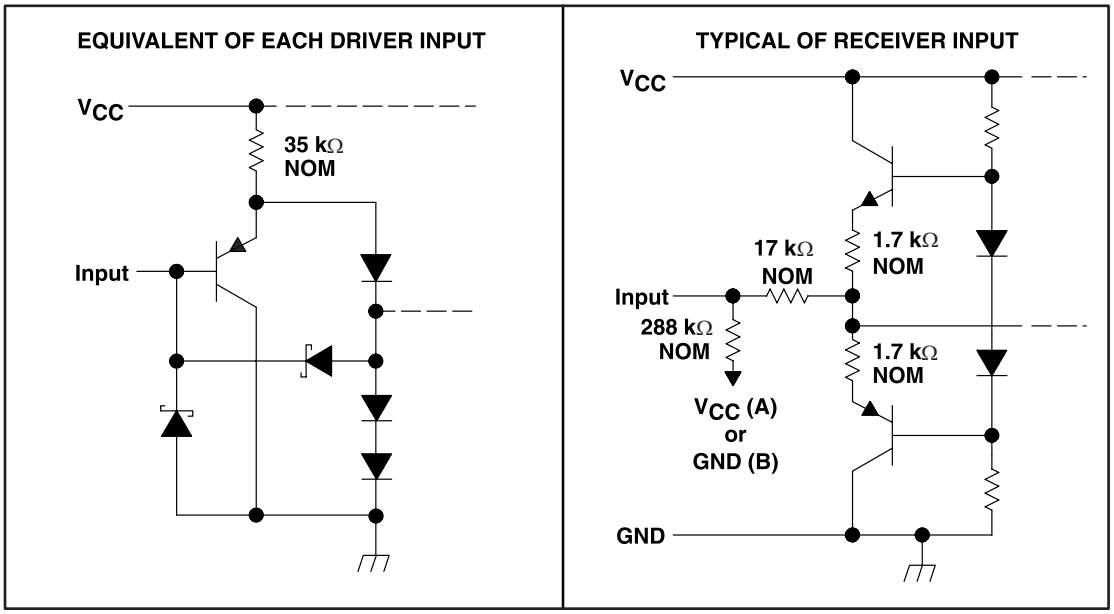

SCHEMATICS OF OUTPUTS

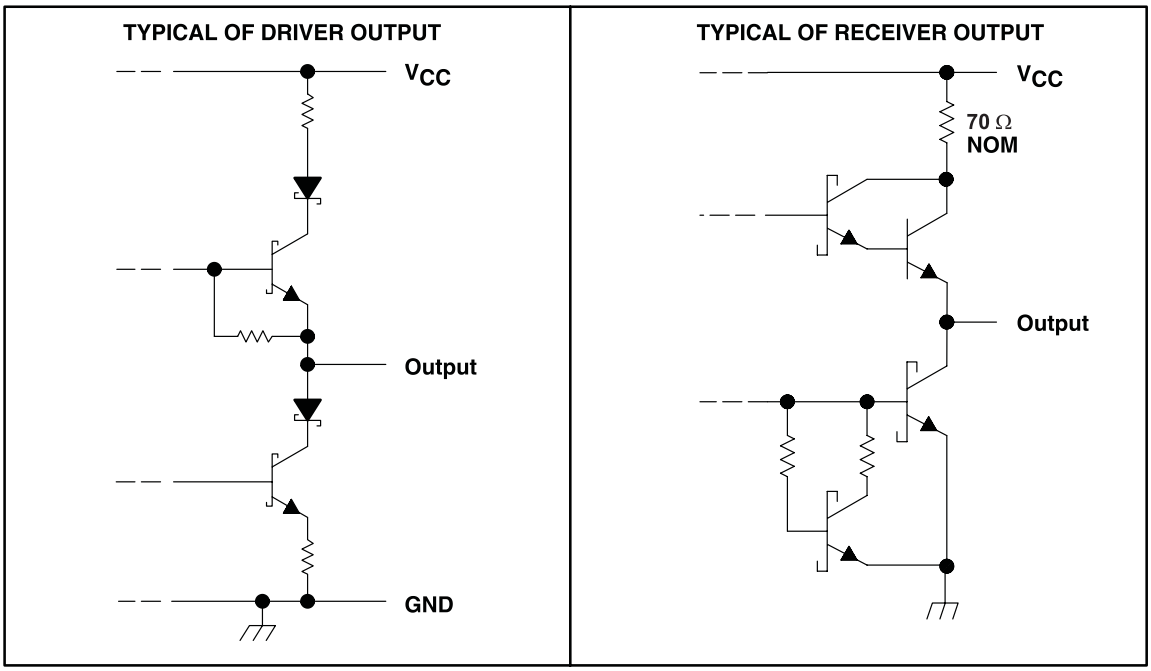

ABSOLUTE MAXIMUM RATINGS(1)

over operating free-air temperature range (unless otherwise noted)

			MIN	MAX	UNIT
V_{CC}	Supply voltage range(2)			7	V
	Input voltage range	D, DE, and $\overline{RE}$ inputs		7	V
	Output voltage range	Driver	–9	14	V
	Input voltage range	Receiver	–14	14	V
	Receiver differential input voltage range(3)		–14	14	V
θ_{JA}	Package thermal impedance(4)(5)	N package		80	°C/W
		NS package		76	
	Lead temperature 1,6 mm (1/16 inch) from case for 10 seconds			260	°C
T_{stg}	Storage temperature range		–65	150	°C

(1) Stresses beyond those listed under “absolute maximum ratings” may cause permanent damage to the device. These are stress ratings only, and functional operation of the device at these or any other conditions beyond those indicated under “recommended operating conditions” is not implied. Exposure to absolute-maximum-rated conditions for extended periods may affect device reliability.
(2) All voltage values, except differential input voltage, are with respect to network ground terminal.
(3) Differential input voltage is measured at the noninverting terminal with respect to the inverting terminal.
(4) Maximum power dissipation is a function of TJ(max), θJA, and TA. The maximum allowable power dissipation at any allowable ambient temperature is PD = (TJ(max) – TA)/θJA. Operating at the absolute maximum TJ of 150°C can affect reliability.
(5) The package thermal impedance is calculated in accordance with JESD 51-7.

RECOMMENDED OPERATING CONDITIONS

			MIN	NOM	MAX	UNIT
V_{CC}	Supply voltage		4.75	5	5.25	V
V_{OC}	Common-mode output voltage(1)	Driver	–7		12	V
V_{IC}	Common-mode input voltage(1)	Receiver	–12		12	V
V_{IH}	High-level input voltage	D, DE, and $\overline{RE}$	2			V
V_{IL}	Low-level input voltage	D, DE, and $\overline{RE}$			0.8	V
V_{ID}	Differential input voltage				±12	V
I_{OH}	High-level output current	Driver			–60	mA
		Receiver			–400	µA
I_{OL}	Low-level output current	Driver			60	mA
		Receiver			8	
T_A	Operating free-air temperature		0		70	°C

(1) The algebraic convention, where the less positive (more negative) limit is designated as minimum, is used in this table for common-mode output voltage level only.

Copyright © 1992–2013, Texas Instruments Incorporated

Driver Section

ELECTRICAL CHARACTERISTICS

over recommended ranges of supply voltage and operating free-air temperature (unless otherwise noted)

PARAMETER		TEST CONDITIONS		MIN	TYP(1)	MAX	UNIT
V_{IK}	Input clamp voltage	I_I = –18 mA				–1.5	V
V_O	Output voltage	I_O = 0		0		6	V
$\|V_{OD1}\|$	Differential output voltage	I_O = 0		1.5		6	V
$\|V_{OD2}\|$	Differential output voltage	V_{CC} = 5 V , R_L = 100 Ω	See Figure 1	1/2 V_{OD1}			V
				2			
		R_L = 54 Ω		1.5	2.3	5	
$\|V_{OD3}\|$	Differential output voltage	V_{test} = –7 V to 12 V,	See Figure 2	1.5		5	V
$\Delta\|V_{OD}\|$	Change in magnitude of differential output voltage	R_L = 54 Ω or 100 Ω,	See Figure 1			±0.2	V
V_{OC}	Common mode output voltage	R_L = 54 Ω or 100 Ω,	See Figure 1			3	V
						–1	
$\Delta\|V_{OC}\|$	Change in magnitude of common-mode output voltage(2)	R_L = 54 Ω or 100 Ω,	See Figure 1			±0.2	V
I_{OZ}	High-impedance-state output current	V_O = –7 V to 12 V(3)				±100	µA
I_{IH}	High-level input current	V_{IH} = 2.4 V				20	µA
I_{IL}	Low-level input current	V_{IL} = 0.4 V				–100	µA
I_{OS}	Short circuit output current	V_O = –7 V				–250	mA
		V_O = V_{CC}				250	
		V_O = 12 V				250	
		V_O = 0 V				–150	
I_{CC}	Supply current (total package)	No load	Outputs enabled		21	30	mA
			Outputs disabled		14	21	

(1) All typical values are at V_{CC} = 5 V and TA = 25°C.
(2) $\Delta|V_{OD}|$ and $\Delta|V_{OC}|$ are the changes in magnitude of V_{OD} and V_{OC}, respectively, that occur when the input is changed from a high level to a low level.
(3) This applies for both power on and power off. Refer to TIA/EIA-485-A for exact conditions

SWITCHING CHARACTERISTICS

over recommended ranges of supply voltage and operating free-air temperature (unless otherwise noted)

PARAMETER		TEST CONDITIONS			MIN	TYP(1)	MAX	UNIT
t_{dD}	Differential output delay time, tdDH or tdDL	R_L = 54 Ω ,	C_L = 50 pF,	See Figure 3	9	13	20	ns
$t_{sk(p)}$	Pulse skew (|tdDH – tdDL|)	R_L = 54 Ω ,	C_L = 50 pF,	See Figure 3		1	8	ns
t_t	Differential output transition time	R_L = 54 Ω ,	C_L = 50 pF,	See Figure 3	3	10	16	ns
t_{PZH}	Output enable time to high level	R_L = 110 Ω ,	See Figure 4			36	53	ns
t_{PZL}	Output enable time to low level	R_L = 110 Ω ,	See Figure 5			39	56	ns
t_{PHZ}	Output disable time from high level	R_L = 110 Ω ,	See Figure 4			20	31	ns
t_{PLZ}	Output disable time from low level	R_L = 110 Ω ,	See Figure 5			9	20	ns

(1) All typical values are at V_{CC} = 5 V and TA = 25°C.

Copyright © 1992–2013, Texas Instruments Incorporated

Receiver Section

ELECTRICAL CHARACTERISTICS

over recommended ranges of supply voltage and operating free-air temperature (unless otherwise noted)

PARAMETER		TEST CONDITIONS			MIN	TYP(1)	MAX	UNIT
V_{T+}	Positive-going threshold voltage, differential input	V_O = 2.7 V,	I_O = –0.4 mA				0.2	V
V_{T-}	Negative-going threshold voltage, differential input	V_O = 0.5 V,	I_O = 8 mA		–0.2			V
V_{hys}	Input hysteresis (V_{T+} – V_{T-})					60		mV
V_{IK}	Input clamp voltage, $\overline{RE}$	I_I = –18 mA					–1.5	V
V_{OH}	High-level output voltage	V_{ID} = 200 mV,	I_{OH} = –400 µA,	See Figure 6	2.7			V
V_{OL}	Low-level output voltage	V_{ID} = 200 mV,	I_{OL} = 8 mA,	See Figure 6			0.45	V
I_{OZ}	High-impedance-state output current	V_O = 0.4 V to 2.4 V					±20	µA
I_I	Line input current	Other input at 0 V(2),	V_I = 12 V				1	mA
			V_I = –7 V				–0.8	
I_{IH}	High-level input current, $\overline{RE}$	V_{IH} = 2.7 V					20	µA
I_{IL}	Low-level input current, $\overline{RE}$	V_{IL} = –7 V					–100	µA
R_I	Input resistance				12			kΩ
I_{OS}	Short circuit output current	V_{ID} = 200 mV,	V_O = 0 V		–15		–85	mA
I_{CC}	Supply current (total package)	No load	Outputs enabled			21	30	mA
			Outputs disabled			14	21	

(1) All typical values are at V_{CC} = 5 V and TA = 25°C.
(2) This applies for both power on and power off. Refer to TIA/EIA-485-A for exact conditions

SWITCHING CHARACTERISTICS

over recommended ranges of supply voltage and operating free-air temperature (unless otherwise noted)

PARAMETER		TEST CONDITIONS	MIN	TYP(1)	MAX	UNIT
t_{PHL}	Differential output delay time, tdDH or tdDL	V_{ID} = –1.5 V to 1.5 V	10	16	25	ns
t_{PLH}	Propagation delay time, low- to high-level output	V_{ID} = –1.5 V to 1.5 V	10	16	25	ns
$t_{sk(p)}$	Pulse skew (|tdDH – tdDL|)	V_{ID} = –1.5 V to 1.5 V		1	8	ns
t_{PZH}	Output enable time to high level			7	15	ns
t_{PZL}	Output enable time to low level			9	19	ns
t_{PHZ}	Output disable time from high level			18	27	ns
t_{PLZ}	Output disable time from low level			10	15	ns

(1) All typical values are at V_{CC} = 5 V and TA = 25°C.

Copyright © 1992–2013, Texas Instruments Incorporated

PARAMETER MEASUREMENT INFORMATION

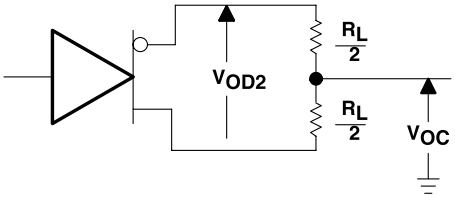

Figure 1. Driver Test Circuit, V_{OD} and V_{OC}

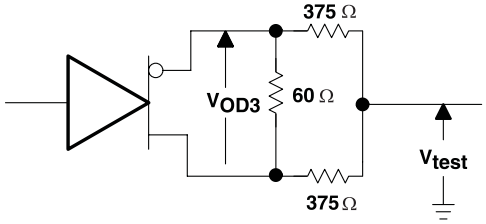

Figure 2. Driver Circuit, V_{OD3}

A. The input pulse is supplied by a generator having the following characteristics: PRR ≤ 1 MHz, 50% duty cycle, t_r ≤ 6 ns, t_f ≤ 6 ns, Z_O = 50 Ω

B. C_L includes probe and jig capacitance.

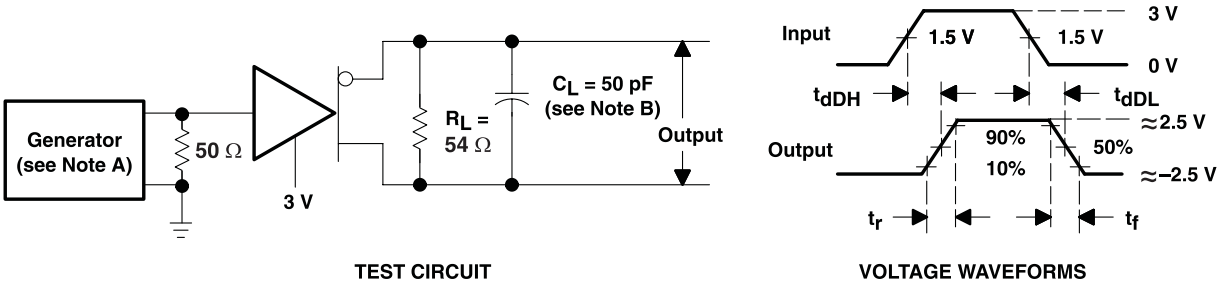

Figure 3. Driver Differential-Output Delay and Transition Times

A. The input pulse is supplied by a generator having the following characteristics: PRR ≤ 1 MHz, 50% duty cycle, t_r ≤ 6 ns, t_f ≤ 6 ns, Z_O = 50 Ω

B. C_L includes probe and jig capacitance.

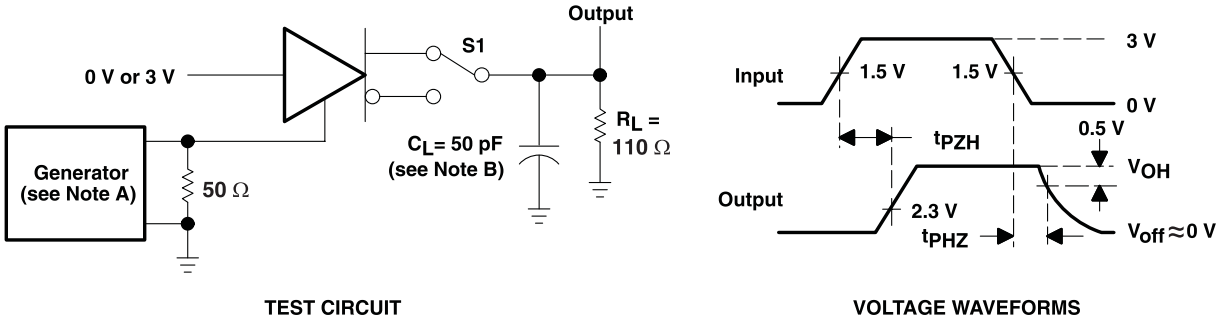

Figure 4. Driver Enable and Disable Times

A. The input pulse is supplied by a generator having the following characteristics: PRR ≤ 1 MHz, 50% duty cycle, t_r ≤ 6 ns, t_f ≤ 6 ns, Z_O = 50 Ω

B. C_L includes probe and jig capacitance.

PARAMETER MEASUREMENT INFORMATION (continued)

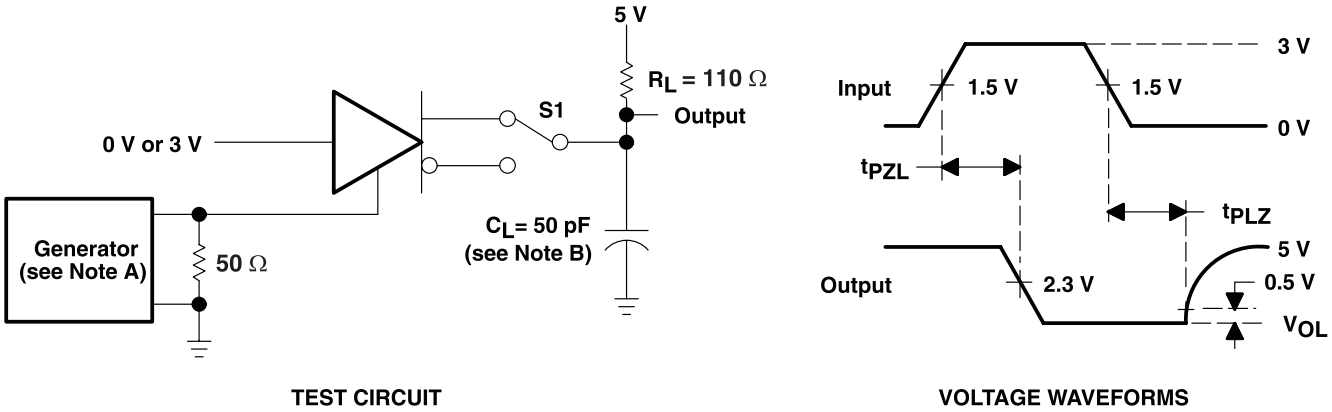

Figure 5. Driver Enable and Disable Times

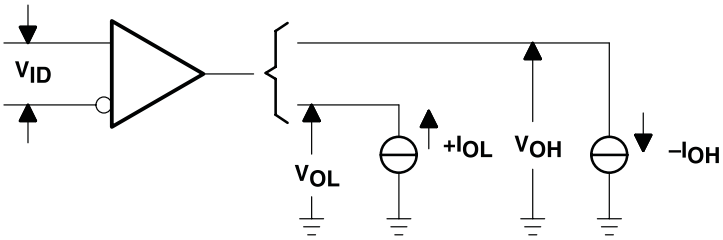

Figure 6. Receiver, V_{OH} and V_{OL}

A. The input pulse is supplied by a generator having the following characteristics: PRR ≤ 1 MHz, 50% duty cycle, t_r ≤ 6 ns, t_f ≤ 6 ns, Z_O = 50 Ω

B. C_L includes probe and jig capacitance.

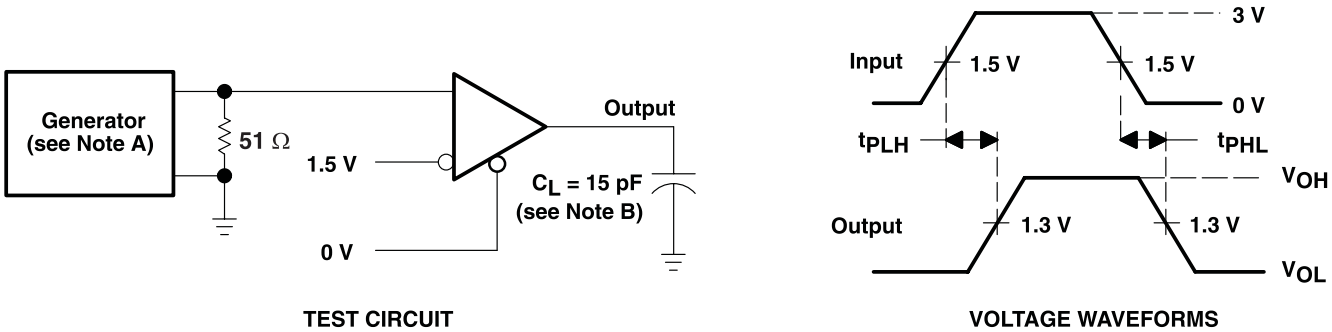

Figure 7. Receiver Propagation-Delay Times

A. The input pulse is supplied by a generator having the following characteristics: PRR ≤ 1 MHz, 50% duty cycle, t_r ≤ 6 ns, t_f ≤ 6 ns, Z_O = 50 Ω

B. C_L includes probe and jig capacitance.

Copyright © 1992–2013, Texas Instruments Incorporated

PARAMETER MEASUREMENT INFORMATION (continued)

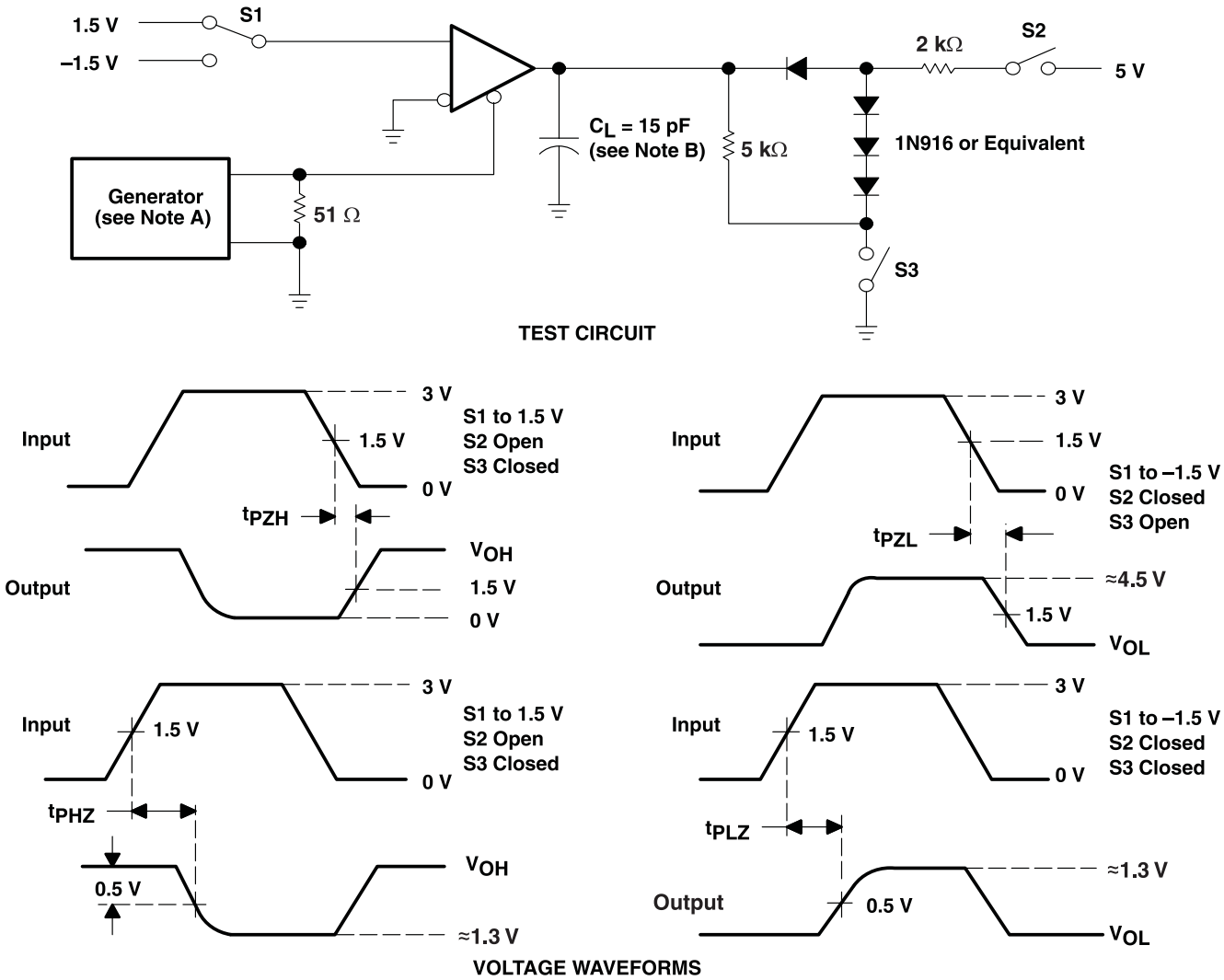

Figure 8. Receiver Output Enable and Disable Times

REVISION HISTORY

Changes from Revision C (May 2010) to Revision D **Page**

- Removed Ordering Information table. 2
- Fixed graphical error in schematic. 3
- Fixed typographical error in MAX value for $\Delta|V_{OD}|$. 5
- Fixed typographical error in UNITS for $\Delta|V_{OC}|$. 5

Copyright © 1992–2013, Texas Instruments Incorporated

PACKAGING INFORMATION

Orderable Device	Status (1)	Package Type	Package Drawing	Pins	Package Qty	Eco Plan (2)	Lead/Ball Finish (6)	MSL Peak Temp (3)	Op Temp (°C)	Device Marking (4/5)	Samples
SN75ALS181N	ACTIVE	PDIP	N	14	25	Green (RoHS & no Sb/Br)	CU NIPDAU	N / A for Pkg Type	0 to 70	SN75ALS181N	Samples
SN75ALS181NSR	ACTIVE	SO	NS	14	2000	Green (RoHS & no Sb/Br)	CU NIPDAU	Level-1-260C-UNLIM	0 to 70	75ALS181	Samples
SN75ALS181NSRG4	ACTIVE	SO	NS	14	2000	Green (RoHS & no Sb/Br)	CU NIPDAU	Level-1-260C-UNLIM	0 to 70	75ALS181	Samples

(1) The marketing status values are defined as follows:
ACTIVE: Product device recommended for new designs.
LIFEBUY: TI has announced that the device will be discontinued, and a lifetime-buy period is in effect.
NRND: Not recommended for new designs. Device is in production to support existing customers, but TI does not recommend using this part in a new design.
PREVIEW: Device has been announced but is not in production. Samples may or may not be available.
OBSOLETE: TI has discontinued the production of the device.

(2) **RoHS:** TI defines "RoHS" to mean semiconductor products that are compliant with the current EU RoHS requirements for all 10 RoHS substances, including the requirement that RoHS substance do not exceed 0.1% by weight in homogeneous materials. Where designed to be soldered at high temperatures, "RoHS" products are suitable for use in specified lead-free processes. TI may reference these types of products as "Pb-Free".
RoHS Exempt: TI defines "RoHS Exempt" to mean products that contain lead but are compliant with EU RoHS pursuant to a specific EU RoHS exemption.
Green: TI defines "Green" to mean the content of Chlorine (Cl) and Bromine (Br) based flame retardants meet JS709B low halogen requirements of <=1000ppm threshold. Antimony trioxide based flame retardants must also meet the <=1000ppm threshold requirement.

(3) MSL, Peak Temp. - The Moisture Sensitivity Level rating according to the JEDEC industry standard classifications, and peak solder temperature.

(4) There may be additional marking, which relates to the logo, the lot trace code information, or the environmental category on the device.

(5) Multiple Device Markings will be inside parentheses. Only one Device Marking contained in parentheses and separated by a "~" will appear on a device. If a line is indented then it is a continuation of the previous line and the two combined represent the entire Device Marking for that device.

(6) Lead/Ball Finish - Orderable Devices may have multiple material finish options. Finish options are separated by a vertical ruled line. Lead/Ball Finish values may wrap to two lines if the finish value exceeds the maximum column width.

Important Information and Disclaimer: The information provided on this page represents TI's knowledge and belief as of the date that it is provided. TI bases its knowledge and belief on information provided by third parties, and makes no representation or warranty as to the accuracy of such information. Efforts are underway to better integrate information from third parties. TI has taken and continues to take reasonable steps to provide representative and accurate information but may not have conducted destructive testing or chemical analysis on incoming materials and chemicals. TI and TI suppliers consider certain information to be proprietary, and thus CAS numbers and other limited information may not be available for release.

In no event shall TI's liability arising out of such information exceed the total purchase price of the TI part(s) at issue in this document sold by TI to Customer on an annual basis.

MECHANICAL DATA

NS (R-PDSO-G)** **PLASTIC SMALL-OUTLINE PACKAGE**

14-PINS SHOWN

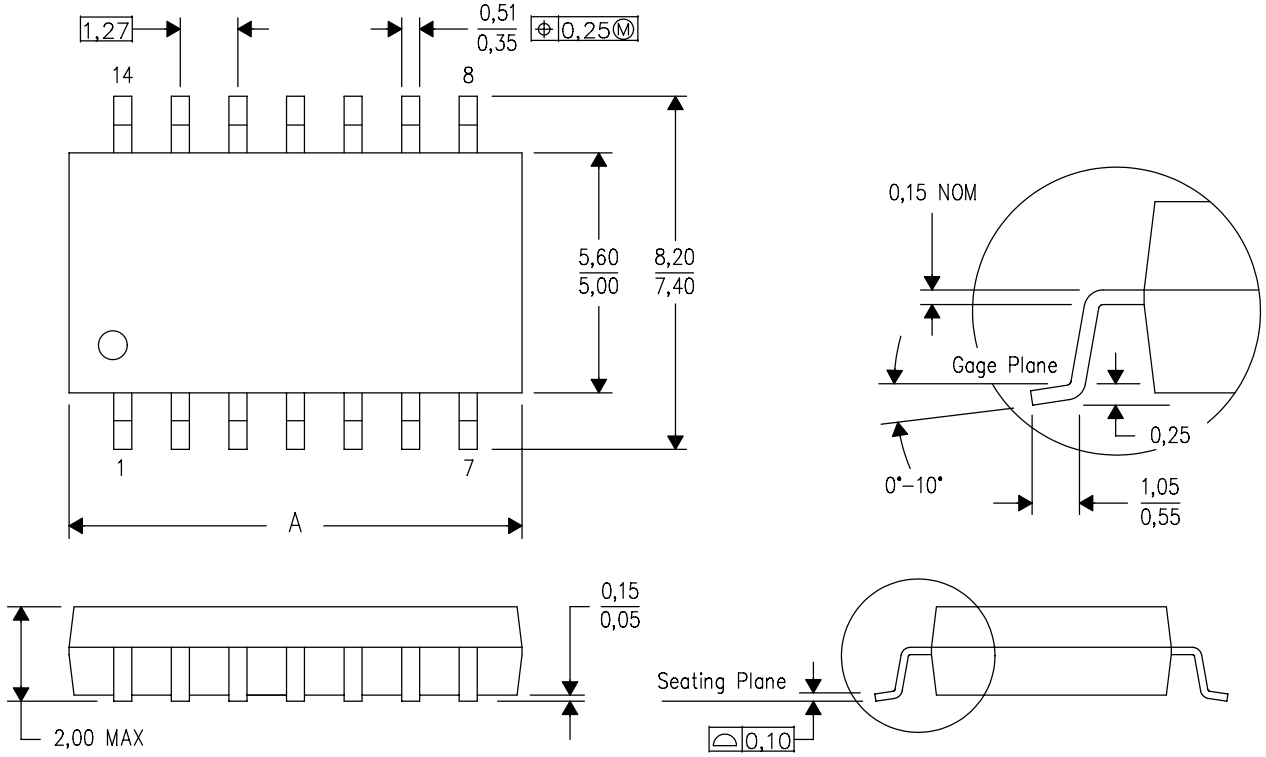

DIM \ PINS **	14	16	20	24
A MAX	10,50	10,50	12,90	15,30
A MIN	9,90	9,90	12,30	14,70

4040062/C 03/03

NOTES:
A. All linear dimensions are in millimeters.
B. This drawing is subject to change without notice.
C. Body dimensions do not include mold flash or protrusion, not to exceed 0,15.

N (R–PDIP–T**) PLASTIC DUAL–IN–LINE PACKAGE

16 PINS SHOWN

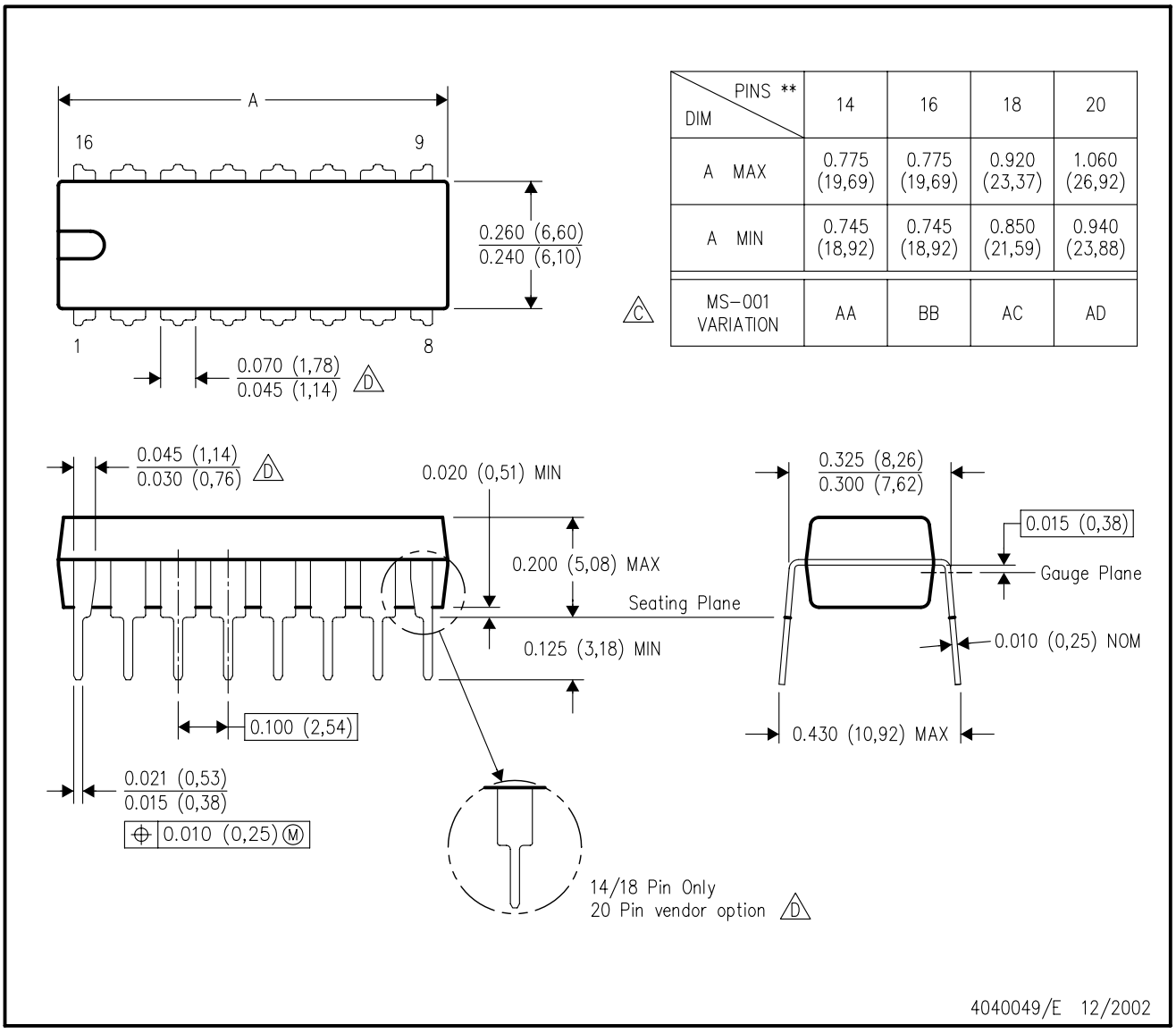

DIM \ PINS **	14	16	18	20
A MAX	0.775 (19,69)	0.775 (19,69)	0.920 (23,37)	1.060 (26,92)
A MIN	0.745 (18,92)	0.745 (18,92)	0.850 (21,59)	0.940 (23,88)
MS–001 VARIATION (C)	AA	BB	AC	AD

NOTES:
A. All linear dimensions are in inches (millimeters).
B. This drawing is subject to change without notice.
C. Falls within JEDEC MS–001, except 18 and 20 pin minimum body length (Dim A).
D. The 20 pin end lead shoulder width is a vendor option, either half or full width.

IMPORTANT NOTICE

Texas Instruments Incorporated (TI) reserves the right to make corrections, enhancements, improvements and other changes to its semiconductor products and services per JESD46, latest issue, and to discontinue any product or service per JESD48, latest issue. Buyers should obtain the latest relevant information before placing orders and should verify that such information is current and complete.

TI's published terms of sale for semiconductor products (http://www.ti.com/sc/docs/stdterms.htm) apply to the sale of packaged integrated circuit products that TI has qualified and released to market. Additional terms may apply to the use or sale of other types of TI products and services.

Reproduction of significant portions of TI information in TI data sheets is permissible only if reproduction is without alteration and is accompanied by all associated warranties, conditions, limitations, and notices. TI is not responsible or liable for such reproduced documentation. Information of third parties may be subject to additional restrictions. Resale of TI products or services with statements different from or beyond the parameters stated by TI for that product or service voids all express and any implied warranties for the associated TI product or service and is an unfair and deceptive business practice. TI is not responsible or liable for any such statements.

Buyers and others who are developing systems that incorporate TI products (collectively, "Designers") understand and agree that Designers remain responsible for using their independent analysis, evaluation and judgment in designing their applications and that Designers have full and exclusive responsibility to assure the safety of Designers' applications and compliance of their applications (and of all TI products used in or for Designers' applications) with all applicable regulations, laws and other applicable requirements. Designer represents that, with respect to their applications, Designer has all the necessary expertise to create and implement safeguards that (1) anticipate dangerous consequences of failures, (2) monitor failures and their consequences, and (3) lessen the likelihood of failures that might cause harm and take appropriate actions. Designer agrees that prior to using or distributing any applications that include TI products, Designer will thoroughly test such applications and the functionality of such TI products as used in such applications.

TI's provision of technical, application or other design advice, quality characterization, reliability data or other services or information, including, but not limited to, reference designs and materials relating to evaluation modules, (collectively, "TI Resources") are intended to assist designers who are developing applications that incorporate TI products; by downloading, accessing or using TI Resources in any way, Designer (individually or, if Designer is acting on behalf of a company, Designer's company) agrees to use any particular TI Resource solely for this purpose and subject to the terms of this Notice.

TI's provision of TI Resources does not expand or otherwise alter TI's applicable published warranties or warranty disclaimers for TI products, and no additional obligations or liabilities arise from TI providing such TI Resources. TI reserves the right to make corrections, enhancements, improvements and other changes to its TI Resources. TI has not conducted any testing other than that specifically described in the published documentation for a particular TI Resource.

Designer is authorized to use, copy and modify any individual TI Resource only in connection with the development of applications that include the TI product(s) identified in such TI Resource. NO OTHER LICENSE, EXPRESS OR IMPLIED, BY ESTOPPEL OR OTHERWISE TO ANY OTHER TI INTELLECTUAL PROPERTY RIGHT, AND NO LICENSE TO ANY TECHNOLOGY OR INTELLECTUAL PROPERTY RIGHT OF TI OR ANY THIRD PARTY IS GRANTED HEREIN, including but not limited to any patent right, copyright, mask work right, or other intellectual property right relating to any combination, machine, or process in which TI products or services are used. Information regarding or referencing third-party products or services does not constitute a license to use such products or services, or a warranty or endorsement thereof. Use of TI Resources may require a license from a third party under the patents or other intellectual property of the third party, or a license from TI under the patents or other intellectual property of TI.

TI RESOURCES ARE PROVIDED "AS IS" AND WITH ALL FAULTS. TI DISCLAIMS ALL OTHER WARRANTIES OR REPRESENTATIONS, EXPRESS OR IMPLIED, REGARDING RESOURCES OR USE THEREOF, INCLUDING BUT NOT LIMITED TO ACCURACY OR COMPLETENESS, TITLE, ANY EPIDEMIC FAILURE WARRANTY AND ANY IMPLIED WARRANTIES OF MERCHANTABILITY, FITNESS FOR A PARTICULAR PURPOSE, AND NON-INFRINGEMENT OF ANY THIRD PARTY INTELLECTUAL PROPERTY RIGHTS. TI SHALL NOT BE LIABLE FOR AND SHALL NOT DEFEND OR INDEMNIFY DESIGNER AGAINST ANY CLAIM, INCLUDING BUT NOT LIMITED TO ANY INFRINGEMENT CLAIM THAT RELATES TO OR IS BASED ON ANY COMBINATION OF PRODUCTS EVEN IF DESCRIBED IN TI RESOURCES OR OTHERWISE. IN NO EVENT SHALL TI BE LIABLE FOR ANY ACTUAL, DIRECT, SPECIAL, COLLATERAL, INDIRECT, PUNITIVE, INCIDENTAL, CONSEQUENTIAL OR EXEMPLARY DAMAGES IN CONNECTION WITH OR ARISING OUT OF TI RESOURCES OR USE THEREOF, AND REGARDLESS OF WHETHER TI HAS BEEN ADVISED OF THE POSSIBILITY OF SUCH DAMAGES.

Unless TI has explicitly designated an individual product as meeting the requirements of a particular industry standard (e.g., ISO/TS 16949 and ISO 26262), TI is not responsible for any failure to meet such industry standard requirements.

Where TI specifically promotes products as facilitating functional safety or as compliant with industry functional safety standards, such products are intended to help enable customers to design and create their own applications that meet applicable functional safety standards and requirements. Using products in an application does not by itself establish any safety features in the application. Designers must ensure compliance with safety-related requirements and standards applicable to their applications. Designer may not use any TI products in life-critical medical equipment unless authorized officers of the parties have executed a special contract specifically governing such use. Life-critical medical equipment is medical equipment where failure of such equipment would cause serious bodily injury or death (e.g., life support, pacemakers, defibrillators, heart pumps, neurostimulators, and implantables). Such equipment includes, without limitation, all medical devices identified by the U.S. Food and Drug Administration as Class III devices and equivalent classifications outside the U.S.

TI may expressly designate certain products as completing a particular qualification (e.g., Q100, Military Grade, or Enhanced Product). Designers agree that it has the necessary expertise to select the product with the appropriate qualification designation for their applications and that proper product selection is at Designers' own risk. Designers are solely responsible for compliance with all legal and regulatory requirements in connection with such selection.

Designer will fully indemnify TI and its representatives against any damages, costs, losses, and/or liabilities arising out of Designer's non-compliance with the terms and provisions of this Notice.

Mailing Address: Texas Instruments, Post Office Box 655303, Dallas, Texas 75265
Copyright © 2018, Texas Instruments Incorporated

Looking for pricing, stock, or lifecycle information?

Click below to explore more details on WIN SOURCE:

- View SN75ALS181NSR on WIN SOURCE
- Texas Instruments Information

Optimize Your Supply Chain with WIN SOURCE Solutions

- Global Sourcing Solution
- Obsolete Management
- Cost Control Management
- Shortage Management
- Alternative Solution
- Excess Inventory Management