FAIRCHILD™

Is Now Part of

ON Semiconductor®

To learn more about ON Semiconductor, please visit our website at
www.onsemi.com

Please note: As part of the Fairchild Semiconductor integration, some of the Fairchild orderable part numbers will need to change in order to meet ON Semiconductor's system requirements. Since the ON Semiconductor product management systems do not have the ability to manage part nomenclature that utilizes an underscore (_), the underscore (_) in the Fairchild part numbers will be changed to a dash (-). This document may contain device numbers with an underscore (_). Please check the ON Semiconductor website to verify the updated device numbers. The most current and up-to-date ordering information can be found at www.onsemi.com. Please email any questions regarding the system integration to Fairchild_questions@onsemi.com.

ON Semiconductor and the ON Semiconductor logo are trademarks of Semiconductor Components Industries, LLC dba ON Semiconductor or its subsidiaries in the United States and/or other countries. ON Semiconductor owns the rights to a number of patents, trademarks, copyrights, trade secrets, and other intellectual property. A listing of ON Semiconductor's product/patent coverage may be accessed at www.onsemi.com/site/pdf/Patent-Marking.pdf. ON Semiconductor reserves the right to make changes without further notice to any products herein. ON Semiconductor makes no warranty, representation or guarantee regarding the suitability of its products for any particular purpose, nor does ON Semiconductor assume any liability arising out of the application or use of any product or circuit, and specifically disclaims any and all liability, including without limitation special, consequential or incidental damages. Buyer is responsible for its products and applications using ON Semiconductor products, including compliance with all laws, regulations and safety requirements or standards, regardless of any support or applications information provided by ON Semiconductor. "Typical" parameters which may be provided in ON Semiconductor data sheets and/or specifications can and do vary in different applications and actual performance may vary over time. All operating parameters, including "Typicals" must be validated for each customer application by customer's technical experts. ON Semiconductor does not convey any license under its patent rights nor the rights of others. ON Semiconductor products are not designed, intended, or authorized for use as a critical component in life support systems or any FDA Class 3 medical devices or medical devices with a same or similar classification in a foreign jurisdiction or any devices intended for implantation in the human body. Should Buyer purchase or use ON Semiconductor products for any such unintended or unauthorized application, Buyer shall indemnify and hold ON Semiconductor and its officers, employees, subsidiaries, affiliates, and distributors harmless against all claims, costs, damages, and expenses, and reasonable attorney fees arising out of, directly or indirectly, any claim of personal injury or death associated with such unintended or unauthorized use, even if such claim alleges that ON Semiconductor was negligent regarding the design or manufacture of the part. ON Semiconductor is an Equal Opportunity/Affirmative Action Employer. This literature is subject to all applicable copyright laws and is not for resale in any manner.

FAIRCHILD SEMICONDUCTOR®

March 2008

74LCXR2245
Low Voltage Bidirectional Transceiver with 5V Tolerant Inputs and Outputs and 26Ω Series Resistors on Both A and B Ports

Features

- 5V tolerant inputs and outputs
- 2.3V–3.6V V_{CC} specifications provided
- 8.0ns t_{PD} max. (V_{CC} = 3.3V), 10µA I_{CC} max.
- Power down high impedance inputs and outputs
- Supports live insertion/withdrawal[1]
- ±12mA output drive (V_{CC} = 3.0V)
- Implements proprietary noise/EMI reduction circuitry
- Latch-up performance exceeds 500mA
- Equivalent 26Ω series resistor on all outputs
- ESD performance:
  - Human body model > 2000V
  - Machine model > 200V

Note:

1. To ensure the high-impedance state during power up or down, $\overline{OE}$ should be tied to V_{CC} through a pull-up resistor: the minimum value or the resistor is determined by the current-sourcing capability of the driver.

General Description

The LCXR2245 contains eight non-inverting bidirectional buffers with 3-STATE outputs and is intended for bus oriented applications. The device is designed for low voltage (2.5V and 3.3V) V_{CC} applications with capability of interfacing to a 5V signal environment. The T/$\overline{R}$ input determines the direction of data flow through the device. The $\overline{OE}$ input disables both the A and B ports by placing them in a high impedance state. The 26Ω series resistor helps reduce output overshoot and undershoot.

The LCXR2245 is fabricated with an advanced CMOS technology to achieve high speed operation while maintaining CMOS low power dissipation.

Ordering Information

Order Number	Package Number	Package Description
74LCXR2245WM	M20B	20-Lead Small Outline Integrated Circuit (SOIC), JEDEC MS-013, 0.300" Wide
74LCXR2245SJ	M20D	20-Lead Small Outline Package (SOP), EIAJ TYPE II, 5.3mm Wide
74LCXR2245MSA	MSA20	20-Lead Shrink Small Outline Package (SSOP), JEDEC MO-150, 5.3mm Wide
74LCXR2245MTC	MTC20	20-Lead Thin Shrink Small Outline Package (TSSOP), JEDEC MO-153, 4.4mm Wide

Device also available in Tape and Reel. Specify by appending suffix letter “X” to the ordering number.

All packages are lead free per JEDEC: J-STD-020B standard.

©2000 Fairchild Semiconductor Corporation

Connection Diagram

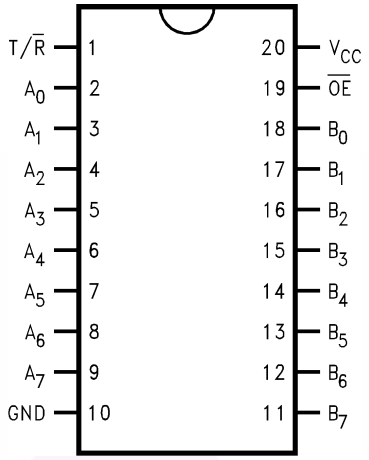

Logic Symbol

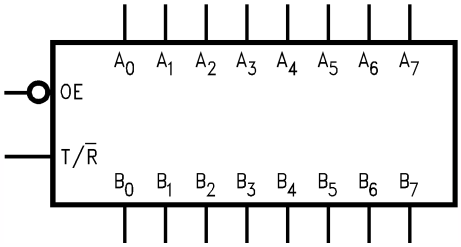

Pin Description

Pin Names	Description
$\overline{OE}$	Output Enable Input
T/$\overline{R}$	Transmit/Receive Input
A_0–A_7	Side A Inputs or 3-STATE Outputs
B_0–B_7	Side B Inputs or 3-STATE Outputs

Truth Table

Inputs		Outputs
$\overline{OE}$	T/$\overline{R}$	
L	L	Bus B_0 – B_7 Data to Bus A_0 – A_7
L	H	Bus A_0 – A_7 Data to Bus B_0 – B_7
H	X	HIGH Z State on A_0 – A_7, B_0 – B_7(2)

H = HIGH Voltage Level

L = LOW Voltage Level

X = Immaterial

Z = High Impedance

Note:

2. Unused bus terminals during HIGH Z State must be held HIGH or LOW.

Logic Diagram

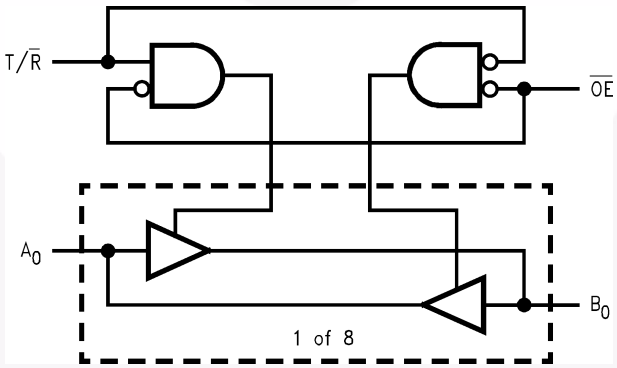

Absolute Maximum Ratings

Stresses exceeding the absolute maximum ratings may damage the device. The device may not function or be operable above the recommended operating conditions and stressing the parts to these levels is not recommended. In addition, extended exposure to stresses above the recommended operating conditions may affect device reliability. The absolute maximum ratings are stress ratings only.

Symbol	Parameter	Rating
V_{CC}	Supply Voltage	–0.5V to +7.0V
V_I	DC Input Voltage	–0.5V to +7.0V
V_O	DC Output Voltage Output in 3-STATE	–0.5V to +7.0V
	Output in HIGH or LOW State(3)	–0.5V to V_{CC} + 0.5V
I_{IK}	DC Input Diode Current, V_I < GND	–50mA
I_{OK}	DC Output Diode Current V_O < GND	–50mA
	V_O > V_{CC}	+50mA
I_O	DC Output Source/Sink Current	±50mA
I_{CC}	DC Supply Current per Supply Pin	±100mA
I_{GND}	DC Ground Current per Ground Pin	±100mA
T_{STG}	Storage Temperature	–65°C to +150°C

Note:

3. I_O Absolute Maximum Rating must be observed.

Recommended Operating Conditions(4)

The Recommended Operating Conditions table defines the conditions for actual device operation. Recommended operating conditions are specified to ensure optimal performance to the datasheet specifications. Fairchild does not recommend exceeding them or designing to absolute maximum ratings.

Symbol	Parameter	Min.	Max.	Units
V_{CC}	Supply Voltage Operating	2.0	3.6	V
	Data Retention	1.5	3.6	
V_I	Input Voltage	0	5.5	V
V_O	Output Voltage HIGH or LOW State	0	V_{CC}	V
	3-STATE	0	5.5	
I_{OH} / I_{OL}	Output Current V_{CC} = 3.0V–3.6V		±12	mA
	V_{CC} = 2.7V–3.0V		±8	
	V_{CC} = 2.3V–2.7V		±4	
T_A	Free-Air Operating Temperature	–40	85	°C
$\Delta t / \Delta V$	Input Edge Rate, V_{IN} = 0.8V–2.0V, V_{CC} = 3.0V	0	10	ns/V

Note:

4. Unused inputs must be held HIGH or LOW. They may not float.

DC Electrical Characteristics

Symbol	Parameter	V_{CC} (V)	Conditions	T_A = –40°C to +85°C Min	Max	Units
V_{IH}	HIGH Level Input Voltage	2.3–2.7		1.7		V
		2.7–3.6		2.0		
V_{IL}	LOW Level Input Voltage	2.3–2.7			0.7	V
		2.7–3.6			0.8	
V_{OH}	HIGH Level Output Voltage	2.3–3.6	I_{OH} = –100μA	V_{CC} – 0.2		V
		2.3	I_{OH} = –4mA	1.8		
		2.7	I_{OH} = –4mA	2.2		
		3.0	I_{OH} = –6mA	2.4		
		2.7	I_{OH} = –8mA	2.0		
		3.0	I_{OH} = –12mA	2.0		
V_{OL}	LOW Level Output Voltage	2.3–3.6	I_{OL} = 100μA		0.2	V
		2.3	I_{OL} = 4mA		0.6	
		2.7	I_{OL} = 4mA		0.4	
		3.0	I_{OL} = 6mA		0.55	
		2.7	I_{OL} = 8mA		0.6	
		3.0	I_{OL} = 12mA		0.8	
I_I	Input Leakage Current	2.3–3.6	$0 \le V_I \le 5.5V$		±5.0	μA
I_{OZ}	3-STATE I/O Leakage	2.3–3.6	$0 \le V_O \le 5.5V$, $V_I = V_{IH}$ or V_{IL}		±5.0	μA
I_{OFF}	Power-Off Leakage Current	0	V_I or V_O = 5.5V		10	μA
I_{CC}	Quiescent Supply Current	2.3–3.6	$V_I = V_{CC}$ or GND		10	μA
		2.3–3.6	$3.6V \le V_I, V_O \le 5.5V$(5)		±10	
ΔI_{CC}	Increase in I_{CC} per Input	2.3–3.6	$V_{IH} = V_{CC}$ –0.6V		500	μA

Note:

5. Outputs disabled or 3-STATE only.

AC Electrical Characteristics

Symbol	Parameter	T_A = –40°C to +85°C, R_L = 500Ω						Units
		V_{CC} = 3.3V ± 0.3V, C_L = 50pF		V_{CC} = 2.7V, C_L = 50pF		V_{CC} = 2.5V ± 0.2V, C_L = 30pF		
		Min.	Max.	Min.	Max.	Min.	Max.	
t_{PHL}, t_{PLH}	Propagation Delay, A_n to B_n or B_n to A_n	1.5	8.0	1.5	9.0	1.5	9.6	ns
t_{PZL}, t_{PZH}	Output Enable Time	1.5	9.5	1.5	10.5	1.5	11.0	ns
t_{PLZ}, t_{PHZ}	Output Disable Time	1.5	7.5	1.5	8.5	1.5	9.0	ns
t_{OSHL}, t_{OSLH}	Output to Output Skew(6)		1.0					ns

Note:

6. Skew is defined as the absolute value of the difference between the actual propagation delay for any two separate outputs of the same device. The specification applies to any outputs switching in the same direction, either HIGH-to-LOW (t_{OSHL}) or LOW-to-HIGH (t_{OSLH}).

Dynamic Switching Characteristics

Symbol	Parameter	V_{CC} (V)	Conditions	T_A = 25°C Typical	Unit
V_{OLP}	Quiet Output Dynamic Peak V_{OL}	3.3	C_L = 50pF, V_{IH} = 3.3V, V_{IL} = 0V	0.5	V
		2.5	C_L = 30pF, V_{IH} = 2.5V, V_{IL} = 0V	0.4	
V_{OLV}	Quiet Output Dynamic Valley V_{OL}	3.3	C_L = 50pF, V_{IH} = 3.3V, V_{IL} = 0V	0.5	V
		2.5	C_L = 30pF, V_{IH} = 2.5V, V_{IL} = 0V	0.4	

Capacitance

Symbol	Parameter	Conditions	Typical	Units
C_{IN}	Input Capacitance	V_{CC} = Open, V_I = 0V or V_{CC}	7	pF
C_{OUT}	Output Capacitance	V_{CC} = 3.3V, V_I = 0V or V_{CC}	8	pF
C_{PD}	Power Dissipation Capacitance	V_{CC} = 3.3V, V_I = 0V or V_{CC}, f = 10MHz	25	pF

AC Loading and Waveforms (Generic for LCX Family)

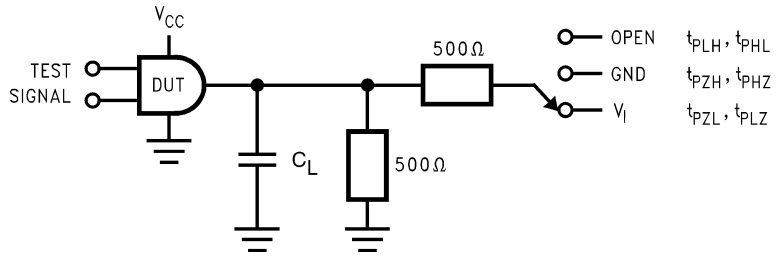

Test	Switch
t_{PLH}, t_{PHL}	Open
t_{PZL}, t_{PLZ}	6V at V_{CC} = 3.3 ± 0.3V V_{CC} x 2 at V_{CC} = 2.5 ± 0.2V
t_{PZH}, t_{PHZ}	GND

Figure 1. AC Test Circuit (C_L includes probe and jig capacitance)

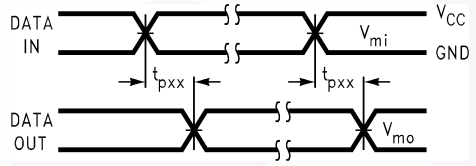

Waveform for Inverting and Non-Inverting Functions

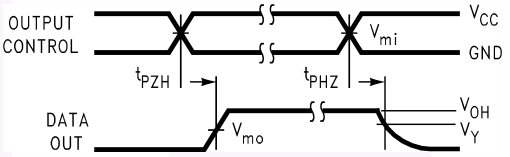

3-STATE Output High Enable and Disable Times for Logic

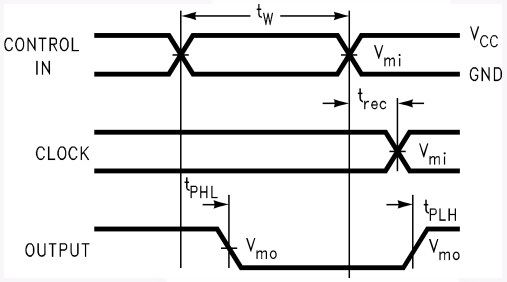

Propagation Delay. Pulse Width and t_{rec} Waveforms

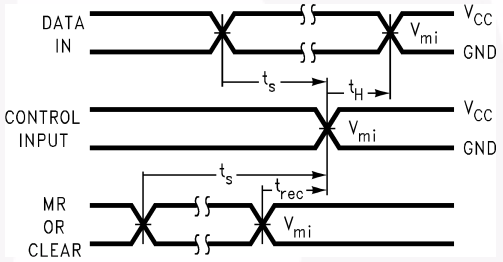

Setup Time, Hold Time and Recovery Time for Logic

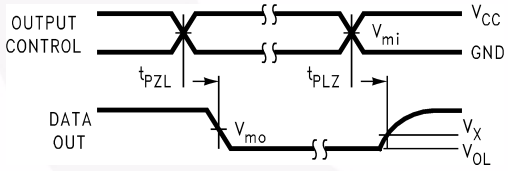

3-STATE Output Low Enable and Disable Times for Logic

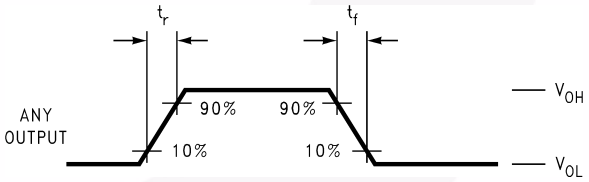

t_{rise} and t_{fall}

Symbol	V_{CC}		
	3.3V ± 0.3V	2.7V	2.5V ± 0.2V
V_{mi}	1.5V	1.5V	V_{CC} / 2
V_{mo}	1.5V	1.5V	V_{CC} / 2
V_x	V_{OL} + 0.3V	V_{OL} + 0.3V	V_{OL} + 0.15V
V_y	V_{OH} – 0.3V	V_{OH} – 0.3V	V_{OH} – 0.15V

Figure 2. Waveforms (Input Characteristics; f = 1MHz, t_r = t_f = 3ns)

Schematic Diagram (Generic for LCX Family)

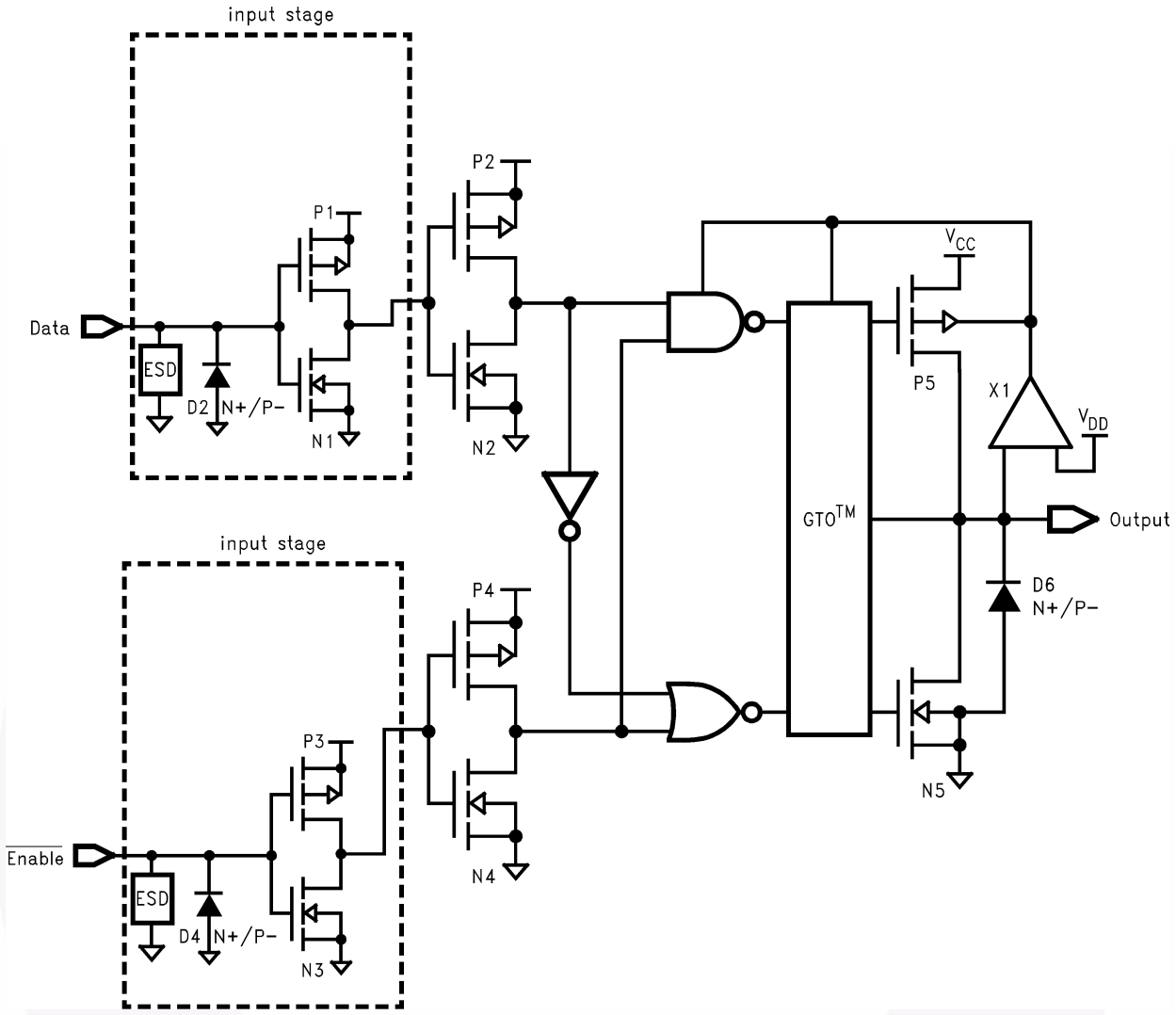

Physical Dimensions

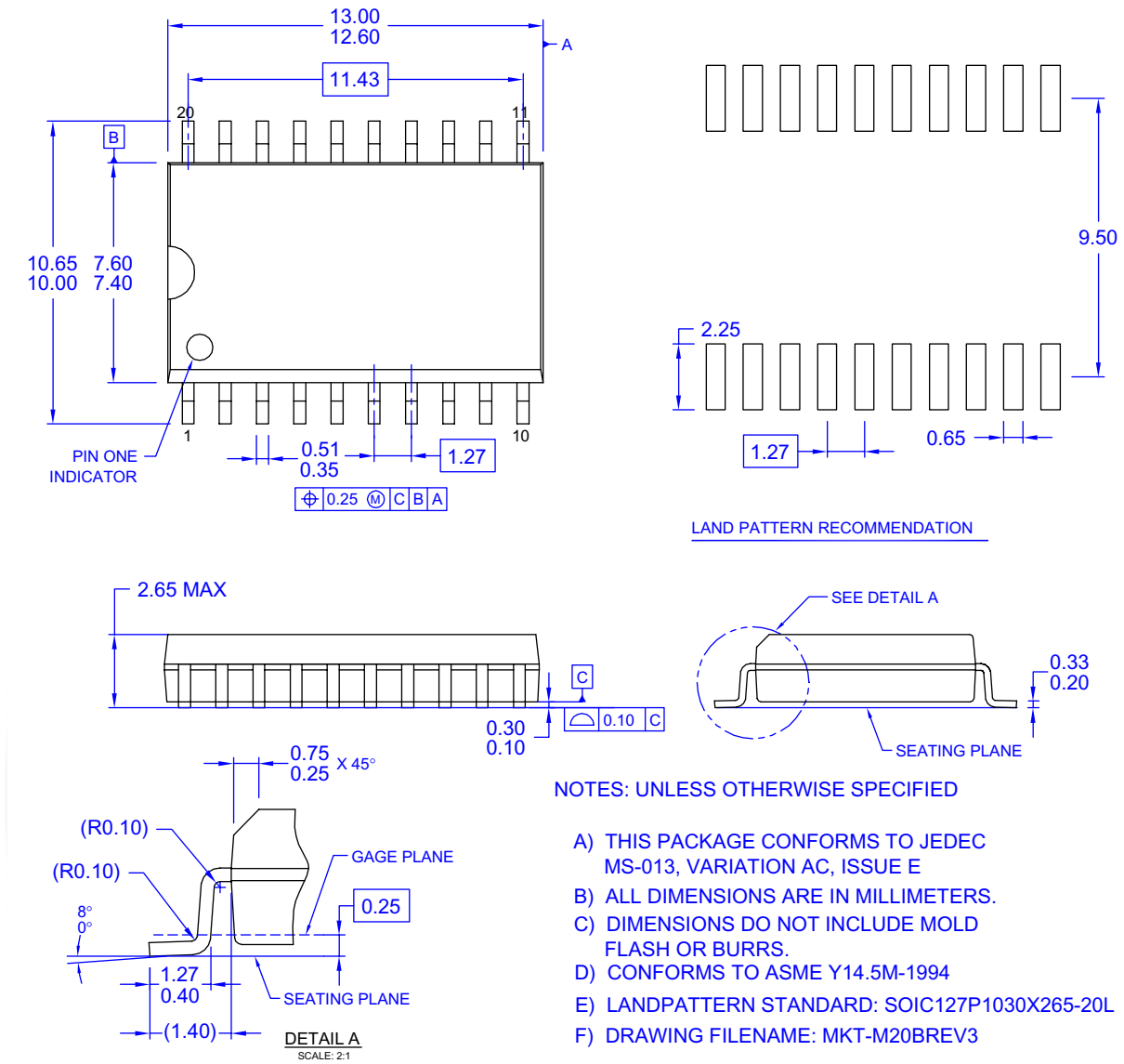

Figure 3. 20-Lead Small Outline Integrated Circuit (SOIC), JEDEC MS-013, 0.300" Wide

Package drawings are provided as a service to customers considering Fairchild components. Drawings may change in any manner without notice. Please note the revision and/or date on the drawing and contact a Fairchild Semiconductor representative to verify or obtain the most recent revision. Package specifications do not expand the terms of Fairchild's worldwide terms and conditions, specifically the warranty therein, which covers Fairchild products.

Always visit Fairchild Semiconductor's online packaging area for the most recent package drawings:

http://www.fairchildsemi.com/packaging/

Physical Dimensions (Continued)

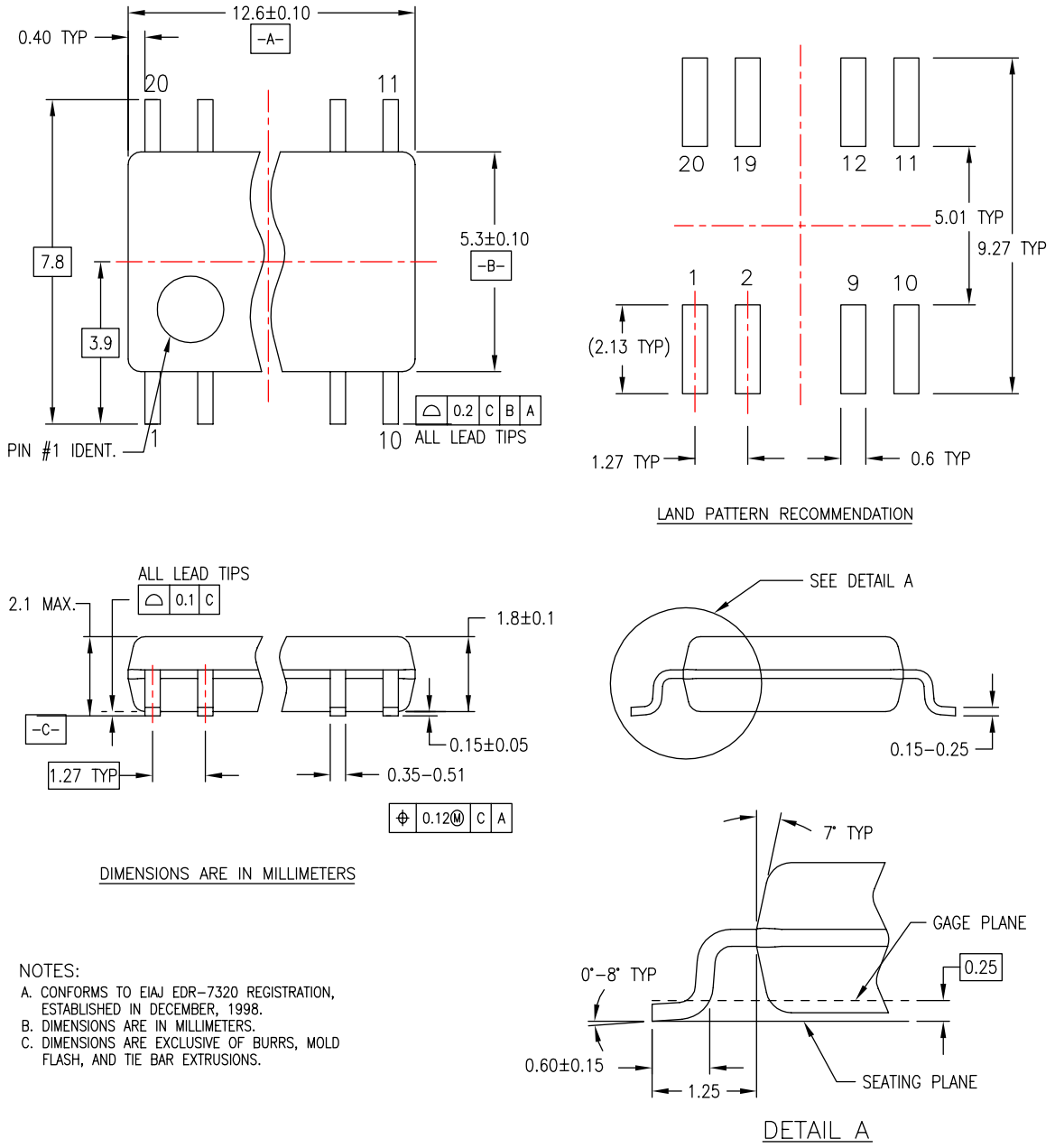

NOTES:
A. CONFORMS TO EIAJ EDR-7320 REGISTRATION, ESTABLISHED IN DECEMBER, 1998.
B. DIMENSIONS ARE IN MILLIMETERS.
C. DIMENSIONS ARE EXCLUSIVE OF BURRS, MOLD FLASH, AND TIE BAR EXTRUSIONS.

Figure 4. 20-Lead Small Outline Package (SOP), EIAJ TYPE II, 5.3mm Wide

Package drawings are provided as a service to customers considering Fairchild components. Drawings may change in any manner without notice. Please note the revision and/or date on the drawing and contact a Fairchild Semiconductor representative to verify or obtain the most recent revision. Package specifications do not expand the terms of Fairchild's worldwide terms and conditions, specifically the warranty therein, which covers Fairchild products.

Always visit Fairchild Semiconductor's online packaging area for the most recent package drawings:

http://www.fairchildsemi.com/packaging/

Physical Dimensions (Continued)

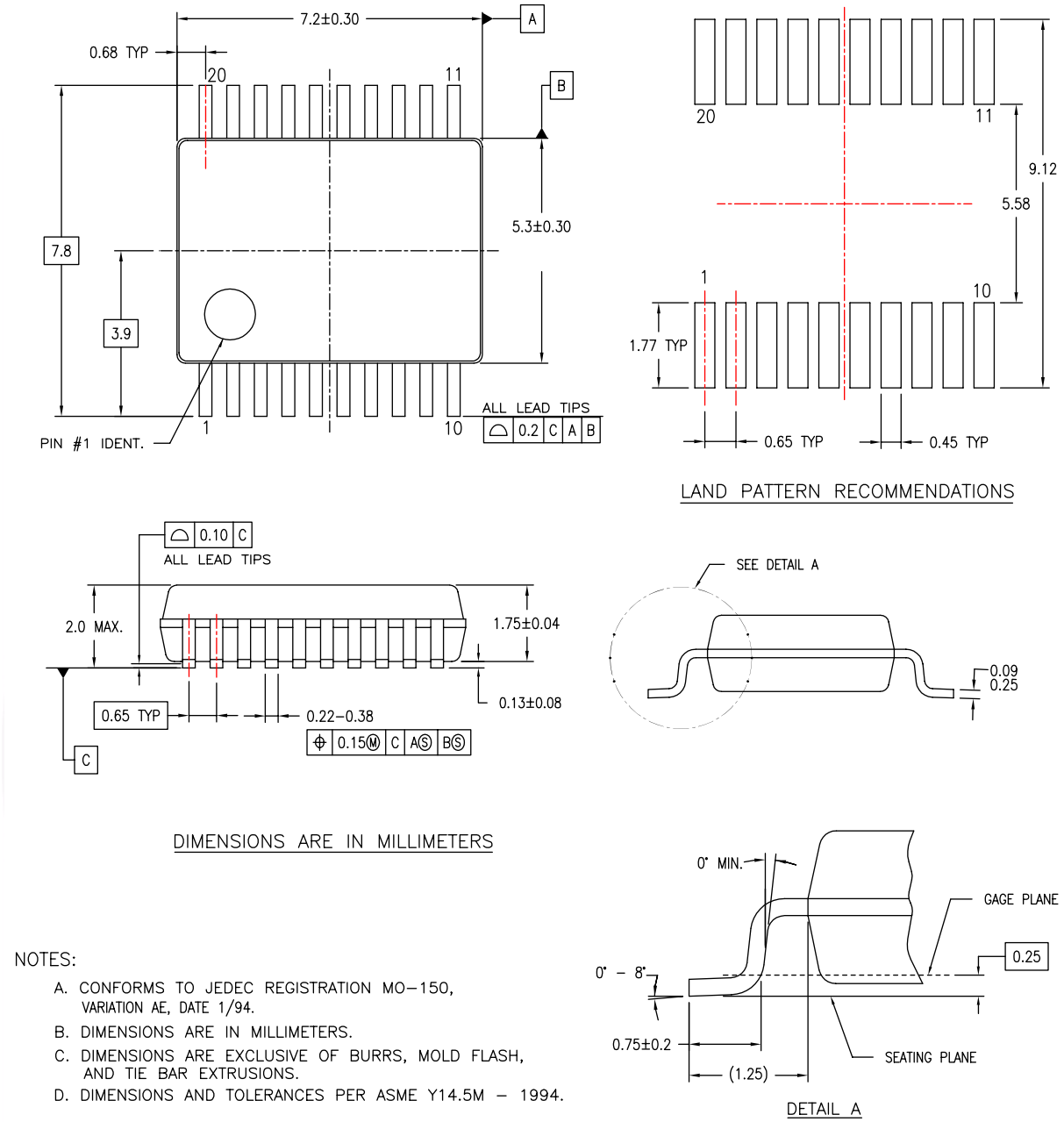

NOTES:

A. CONFORMS TO JEDEC REGISTRATION MO–150, VARIATION AE, DATE 1/94.

B. DIMENSIONS ARE IN MILLIMETERS.

C. DIMENSIONS ARE EXCLUSIVE OF BURRS, MOLD FLASH, AND TIE BAR EXTRUSIONS.

D. DIMENSIONS AND TOLERANCES PER ASME Y14.5M – 1994.

MSA20REVB

Figure 5. 20-Lead Shrink Small Outline Package (SSOP), JEDEC MO-150, 5.3mm Wide

Package drawings are provided as a service to customers considering Fairchild components. Drawings may change in any manner without notice. Please note the revision and/or date on the drawing and contact a Fairchild Semiconductor representative to verify or obtain the most recent revision. Package specifications do not expand the terms of Fairchild's worldwide terms and conditions, specifically the warranty therein, which covers Fairchild products.

Always visit Fairchild Semiconductor's online packaging area for the most recent package drawings:

http://www.fairchildsemi.com/packaging/

Physical Dimensions (Continued)

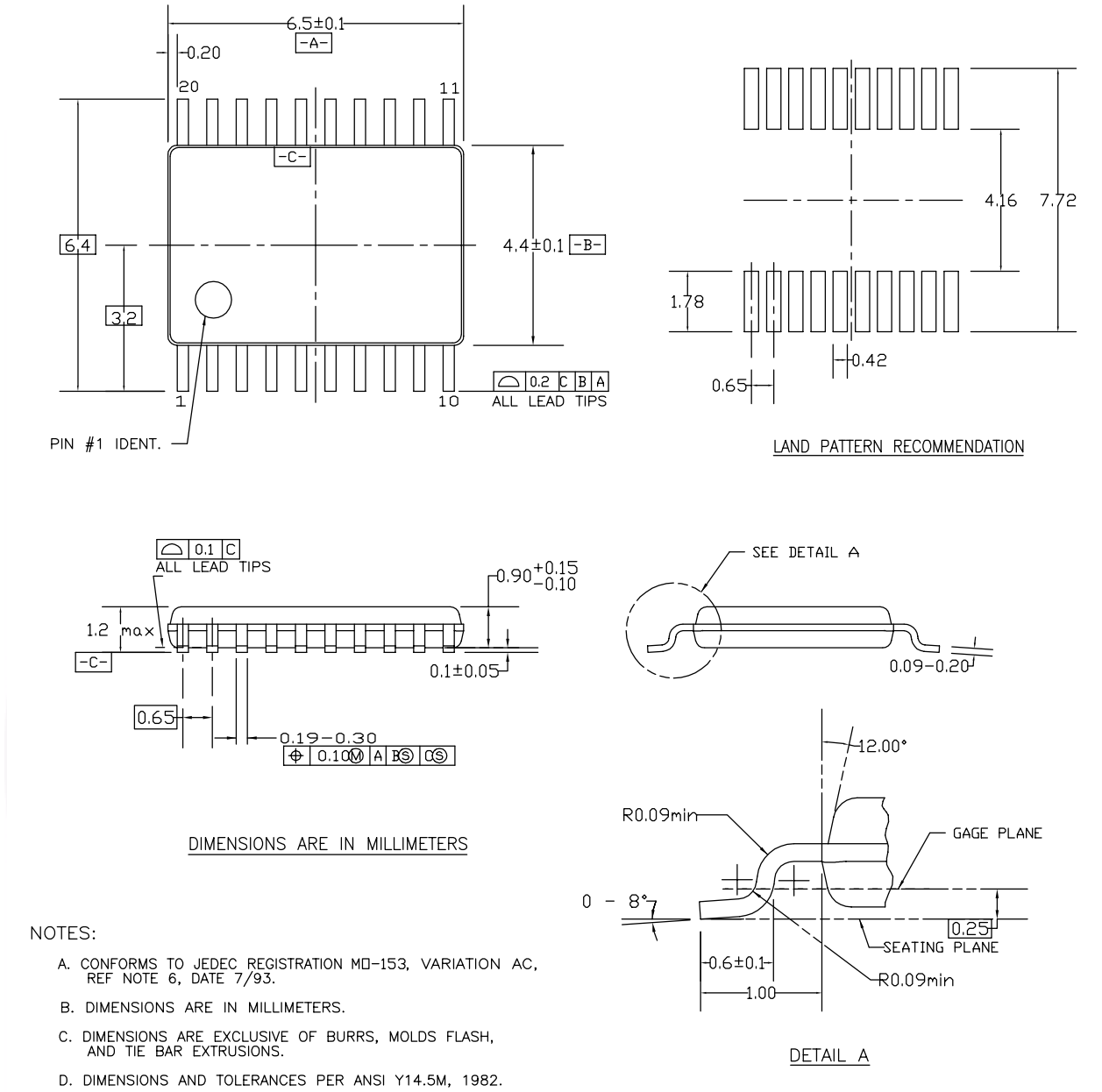

NOTES:

A. CONFORMS TO JEDEC REGISTRATION MO-153, VARIATION AC, REF NOTE 6, DATE 7/93.

B. DIMENSIONS ARE IN MILLIMETERS.

C. DIMENSIONS ARE EXCLUSIVE OF BURRS, MOLDS FLASH, AND TIE BAR EXTRUSIONS.

D. DIMENSIONS AND TOLERANCES PER ANSI Y14.5M, 1982.

MTC20REVD1

Figure 6. 20-Lead Thin Shrink Small Outline Package (TSSOP), JEDEC MO-153, 4.4mm Wide

Package drawings are provided as a service to customers considering Fairchild components. Drawings may change in any manner without notice. Please note the revision and/or date on the drawing and contact a Fairchild Semiconductor representative to verify or obtain the most recent revision. Package specifications do not expand the terms of Fairchild's worldwide terms and conditions, specifically the warranty therein, which covers Fairchild products.

Always visit Fairchild Semiconductor's online packaging area for the most recent package drawings:

http://www.fairchildsemi.com/packaging/

FAIRCHILD SEMICONDUCTOR®

TRADEMARKS

The following includes registered and unregistered trademarks and service marks, owned by Fairchild Semiconductor and/or its global subsidiaries, and is not intended to be an exhaustive list of all such trademarks.

ACEx®
Build it Now™
CorePLUS™
CROSSVOLT™
CTL™
Current Transfer Logic™
EcoSPARK®
EZSWITCH™ *
EZ™
F®
Fairchild®
Fairchild Semiconductor®
FACT Quiet Series™
FACT®
FAST®
FastvCore™
FlashWriter® *
FPS™
FRFET®
Global Power Resource℠
Green FPS™
Green FPS™ e-Series™
GTO™
i-Lo™
IntelliMAX™
ISOPLANAR™
MegaBuck™
MICROCOUPLER™
MicroFET™
MicroPak™
MillerDrive™
Motion-SPM™
OPTOLOGIC®
OPTOPLANAR®
PDP-SPM™
Power220®
POWEREDGE®
Power-SPM™
PowerTrench®
Programmable Active Droop™
QFET®
QS™
QT Optoelectronics™
Quiet Series™
RapidConfigure™
SMART START™
SPM®
STEALTH™
SuperFET™
SuperSOT™-3
SuperSOT™-6
SuperSOT™-8
SupreMOS™
SyncFET™
SYSTEM GENERAL®
The Power Franchise®
the power franchise
TinyBoost™
TinyBuck™
TinyLogic®
TINYOPTO™
TinyPower™
TinyPWM™
TinyWire™
µSerDes™
UHC®
Ultra FRFET™
UniFET™
VCX™

* EZSWITCH™ and FlashWriter® are trademarks of System General Corporation, used under license by Fairchild Semiconductor.

DISCLAIMER

FAIRCHILD SEMICONDUCTOR RESERVES THE RIGHT TO MAKE CHANGES WITHOUT FURTHER NOTICE TO ANY PRODUCTS HEREIN TO IMPROVE RELIABILITY, FUNCTION, OR DESIGN. FAIRCHILD DOES NOT ASSUME ANY LIABILITY ARISING OUT OF THE APPLICATION OR USE OF ANY PRODUCT OR CIRCUIT DESCRIBED HEREIN; NEITHER DOES IT CONVEY ANY LICENSE UNDER ITS PATENT RIGHTS, NOR THE RIGHTS OF OTHERS. THESE SPECIFICATIONS DO NOT EXPAND THE TERMS OF FAIRCHILD'S WORLDWIDE TERMS AND CONDITIONS, SPECIFICALLY THE WARRANTY THEREIN, WHICH COVERS THESE PRODUCTS.

LIFE SUPPORT POLICY

FAIRCHILD'S PRODUCTS ARE NOT AUTHORIZED FOR USE AS CRITICAL COMPONENTS IN LIFE SUPPORT DEVICES OR SYSTEMS WITHOUT THE EXPRESS WRITTEN APPROVAL OF FAIRCHILD SEMICONDUCTOR CORPORATION.

As used herein:

1. Life support devices or systems are devices or systems which, (a) are intended for surgical implant into the body or (b) support or sustain life, and (c) whose failure to perform when properly used in accordance with instructions for use provided in the labeling, can be reasonably expected to result in a significant injury of the user.
2. A critical component in any component of a life support, device, or system whose failure to perform can be reasonably expected to cause the failure of the life support device or system, or to affect its safety or effectiveness.

PRODUCT STATUS DEFINITIONS

Definition of Terms

Datasheet Identification	Product Status	Definition
Advance Information	Formative or In Design	This datasheet contains the design specifications for product development. Specifications may change in any manner without notice.
Preliminary	First Production	This datasheet contains preliminary data; supplementary data will be published at a later date. Fairchild Semiconductor reserves the right to make changes at any time without notice to improve design.
No Identification Needed	Full Production	This datasheet contains final specifications. Fairchild Semiconductor reserves the right to make changes at any time without notice to improve the design.
Obsolete	Not In Production	This datasheet contains specifications on a product that has been discontinued by Fairchild Semiconductor. The datasheet is printed for reference information only.

Rev. I33

ON Semiconductor and ON are trademarks of Semiconductor Components Industries, LLC dba ON Semiconductor or its subsidiaries in the United States and/or other countries. ON Semiconductor owns the rights to a number of patents, trademarks, copyrights, trade secrets, and other intellectual property. A listing of ON Semiconductor's product/patent coverage may be accessed at www.onsemi.com/site/pdf/Patent−Marking.pdf. ON Semiconductor reserves the right to make changes without further notice to any products herein. ON Semiconductor makes no warranty, representation or guarantee regarding the suitability of its products for any particular purpose, nor does ON Semiconductor assume any liability arising out of the application or use of any product or circuit, and specifically disclaims any and all liability, including without limitation special, consequential or incidental damages. Buyer is responsible for its products and applications using ON Semiconductor products, including compliance with all laws, regulations and safety requirements or standards, regardless of any support or applications information provided by ON Semiconductor. "Typical" parameters which may be provided in ON Semiconductor data sheets and/or specifications can and do vary in different applications and actual performance may vary over time. All operating parameters, including "Typicals" must be validated for each customer application by customer's technical experts. ON Semiconductor does not convey any license under its patent rights nor the rights of others. ON Semiconductor products are not designed, intended, or authorized for use as a critical component in life support systems or any FDA Class 3 medical devices or medical devices with a same or similar classification in a foreign jurisdiction or any devices intended for implantation in the human body. Should Buyer purchase or use ON Semiconductor products for any such unintended or unauthorized application, Buyer shall indemnify and hold ON Semiconductor and its officers, employees, subsidiaries, affiliates, and distributors harmless against all claims, costs, damages, and expenses, and reasonable attorney fees arising out of, directly or indirectly, any claim of personal injury or death associated with such unintended or unauthorized use, even if such claim alleges that ON Semiconductor was negligent regarding the design or manufacture of the part. ON Semiconductor is an Equal Opportunity/Affirmative Action Employer. This literature is subject to all applicable copyright laws and is not for resale in any manner.

PUBLICATION ORDERING INFORMATION

LITERATURE FULFILLMENT:
Literature Distribution Center for ON Semiconductor
19521 E. 32nd Pkwy, Aurora, Colorado 80011 USA
Phone: 303−675−2175 or 800−344−3860 Toll Free USA/Canada
Fax: 303−675−2176 or 800−344−3867 Toll Free USA/Canada
Email: orderlit@onsemi.com

N. American Technical Support: 800−282−9855 Toll Free USA/Canada
Europe, Middle East and Africa Technical Support:
Phone: 421 33 790 2910
Japan Customer Focus Center
Phone: 81−3−5817−1050

ON Semiconductor Website: **www.onsemi.com**

Order Literature: http://www.onsemi.com/orderlit

For additional information, please contact your local Sales Representative

Looking for pricing, stock, or lifecycle information?

Click below to explore more details on WIN SOURCE:

- View 74LCXR2245WM on WIN SOURCE
- Fairchild/ON Semiconductor Information

Optimize Your Supply Chain with WIN SOURCE Solutions

- Global Sourcing Solution
- Obsolete Management
- Cost Control Management
- Shortage Management
- Alternative Solution
- Excess Inventory Management