THE DATASHEET OF

TPD4E1U06DBVR

www.win-source.net 0086-755-83957316

TPD4E1U06 Quad-Channel, High-Speed ESD Protection Device

1 Features

- IEC 61000-4-2 Level 4 ESD Protection
  - ±15-kV Contact Discharge
  - ±15-kV Air-Gap Discharge
- IEC 61000-4-4 EFT Protection
  - 80 A (5/50 ns)
- IEC 61000-4-5 Surge Protection
  - 3 A (8/20 µs)
- IO Capacitance 0.8 pF (Typical)
- DC Breakdown Voltage 6.5 V (Minimum)
- Ultra Low Leakage Current 10 nA (Maximum)
- Low ESD Clamping Voltage
- Industrial Temperature Range: –40°C to +125°C
- Small, Easy-to-Route DCK, and DBV Package

2 Applications

- USB 2.0
- Ethernet
- HDMI Control Lines
- MIPI Bus
- LVDS
- SATA

3 Description

The TPD4E1U06 is a quad-channel unidirectional Transient Voltage Suppressor (TVS) based Electrostatic Discharge (ESD) protection diode with ultra low capacitance. This device can dissipate ESD strikes above the maximum level specified by the IEC 61000-4-2 international standard. Its 0.8-pF line capacitance makes it suitable for a wide range of applications. Typical application areas include HDMI, USB2.0, MHL, and DisplayPort.

Device Information(1)

PART NUMBER	PACKAGE	BODY SIZE (NOM)
TPD4E1U06DCK	SC70	2.00 mm × 1.25 mm
TPD4E1U06DBV	SOT-23	2.90 mm × 1.60 mm

(1) For all available packages, see the orderable addendum at the end of the datasheet.

Simplified Schematic

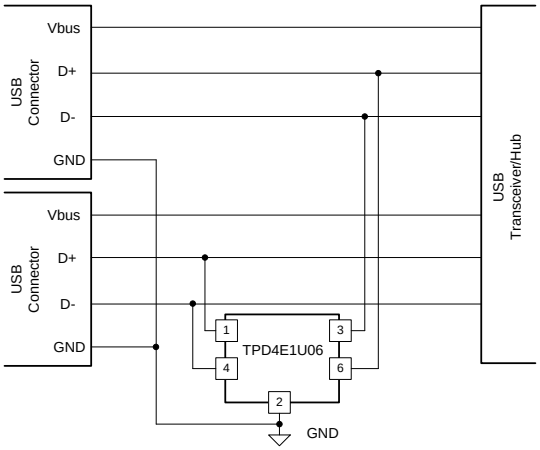

Circuit Schematic Diagram

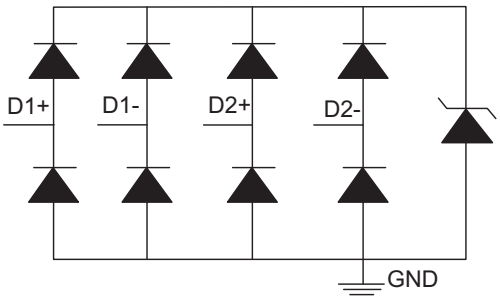

An IMPORTANT NOTICE at the end of this data sheet addresses availability, warranty, changes, use in safety-critical applications, intellectual property matters and other important disclaimers. PRODUCTION DATA.

Table of Contents

1 Features ... 1
2 Applications ... 1
3 Description ... 1
4 Revision History ... 2
5 Pin Configuration and Functions ... 3
6 Specifications ... 4
6.1 Absolute Maximum Ratings ... 4
6.2 ESD Ratings ... 4
6.3 ESD Ratings—IEC Specification ... 4
6.4 Recommended Operating Conditions ... 4
6.5 Thermal Information ... 4
6.6 Electrical Characteristics ... 5
6.7 Typical Characteristics ... 6
7 Detailed Description ... 8
7.1 Overview ... 8
7.2 Functional Block Diagram ... 8
7.3 Feature Description ... 8
7.4 Device Functional Modes ... 9
8 Application and Implementation ... 10
8.1 Application Information ... 10
8.2 Typical Application ... 10
9 Power Supply Recommendations ... 12
10 Layout ... 12
10.1 Layout Guidelines ... 12
10.2 Layout Example ... 12
11 Device and Documentation Support ... 13
11.1 Documentation Support ... 13
11.2 Receiving Notification of Documentation Updates 13
11.3 Community Resources ... 13
11.4 Trademarks ... 13
11.5 Electrostatic Discharge Caution ... 13
11.6 Glossary ... 13
12 Mechanical, Packaging, and Orderable Information ... 13

4 Revision History

NOTE: Page numbers for previous revisions may differ from page numbers in the current version.

Changes from Revision C (October 2014) to Revision D	Page
• Updated DCK and DBV Pinout image	3
• Added 61000-4-5 spec to *Absolute Maximum Ratings* table	4
• Added *IEC 61000-4-5 Surge Protection* section	8
• Added *IEC 61000-4-4 EFT Protection* section	8

Changes from Revision B (February 2013) to Revision C	Page
• Added *Pin Configuration and Functions* section, *Handling Rating* table, *Feature Description* section, *Device Functional Modes*, *Application and Implementation* section, *Power Supply Recommendations* section, *Layout* section, *Device and Documentation Support* section, and *Mechanical, Packaging, and Orderable Information* section	1

Changes from Revision A (December 2012) to Revision B	Page
• Added C_{CROSS} data for DBV package	5

Copyright © 2012–2017, Texas Instruments Incorporated

5 Pin Configuration and Functions

DCK Package
6-Pin SC70
Top View

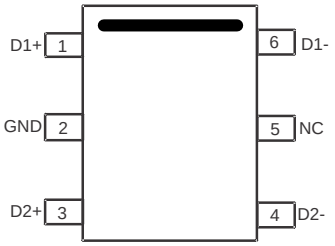

DBV Package
6-Pin SOT-23
Top View

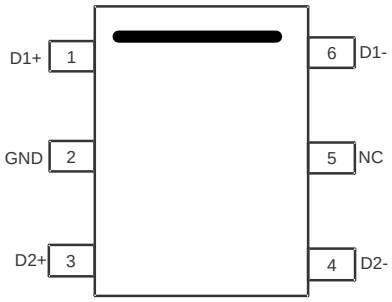

Pin Functions

PIN		I/O	DESCRIPTION
NAME	NO.		
D1+	1	I/O	ESD protected channel. Connect to data line as close to the connector as possible
D1–	6	I/O	
D2–	4	I/O	
D2+	3	I/O	
GND	2	GND	Ground. Connect to ground
NC	5	I/O	No connect. Can be left floating, grounded, or connected to VCC

6 Specifications

6.1 Absolute Maximum Ratings

over operating free-air temperature range (unless otherwise noted) (1)

		MIN	MAX	UNIT
	IEC 61000-4-4 EFT protection (5/50 ns)		80	A
I_{PP}	IEC 61000-4-5 surge protection (8/20 μs) peak pulse current		3	A
P_{PP}	IEC 61000-4-5 surge protection (8/20 μs) peak pulse power		45	W
	Operating temperature	–40	125	°C
T_{stg}	Storage temperature	–65	115	°C

(1) Stresses beyond those listed under *Absolute Maximum Ratings* may cause permanent damage to the device. These are stress ratings only, which do not imply functional operation of the device at these or any other conditions beyond those indicated under *Recommended Operating Conditions*. Exposure to absolute-maximum-rated conditions for extended periods may affect device reliability.

6.2 ESD Ratings

		VALUE	UNIT
$V_{(ESD)}$ Electrostatic discharge	Human body model (HBM), per ANSI/ESDA/JEDEC JS-001, all pins (1)	±4000	V
	Charged device model (CDM), per JEDEC specification JESD22-C101, all pins (2)	±1500	

(1) JEDEC document JEP155 states that 500-V HBM allows safe manufacturing with a standard ESD control process.
(2) JEDEC document JEP157 states that 250-V CDM allows safe manufacturing with a standard ESD control process.

6.3 ESD Ratings—IEC Specification

		VALUE	UNIT
$V_{(ESD)}$ Electrostatic discharge	IEC 61000-4-2 contact ESD	±15000	V
	IEC 61000-4-2 air-gap ESD	±15000	

6.4 Recommended Operating Conditions

over operating free-air temperature range (unless otherwise noted)

		MIN	MAX	UNIT
V_{IO}	Input pin voltage	0	5.5	V
T_A	Operating free-air temperature	–40	125	°C

6.5 Thermal Information

THERMAL METRIC (1)		TPD4E1U06		UNIT
		DBV (SOT-23)	DCK (SC-70)	
		6 PINS	6 PINS	
$R_{\theta JA}$	Junction-to-ambient thermal resistance	224.3	274.3	°C/W
$R_{\theta JC(top)}$	Junction-to-case (top) thermal resistance	166.1	113.8	°C/W
$R_{\theta JB}$	Junction-to-board thermal resistance	68.4	76.7	°C/W
ψ_{JT}	Junction-to-top characterization parameter	57.3	3.6	°C/W
ψ_{JB}	Junction-to-board characterization parameter	67.9	75.9	°C/W

(1) For more information about traditional and new thermal metrics, see the *Semiconductor and IC Package Thermal Metrics* application report.

Copyright © 2012–2017, Texas Instruments Incorporated

6.6 Electrical Characteristics

over recommended operating free-air temperature range (unless otherwise noted)

PARAMETER		TEST CONDITIONS		MIN	TYP	MAX	UNIT
V_{RWM}	Reverse stand-off voltage	I_{IO} = 10 µA				5.5	V
V_{CLAMP}	Clamp voltage with ESD strike	I_{PP} = 1 A, tp = 8/20 µs, from I/O to GND(1)			11		V
		I_{PP} = 3 A, tp = 8/20 µs, from I/O to GND(1)			15		V
R_{DYN}	Dynamic resistance	Pin x to GND pin(2)			1.0		Ω
		GND to pin x			0.6		
C_L	Line capacitance	f = 1 MHz, V_{BIAS} = 2.5 V, 25°C			0.8	1	pF
C_{CROSS}	Channel to channel input capacitance	Pin 2 = 0 V, f = 1 MHz, V_{BIAS} = 2.5 V, between channel pins	DCK package		0.006	0.015	pF
			DBV package		0.01	0.025	
$\Delta C_{IO\text{-}TO\text{-}GND}$	Variation of channel input capacitance	Pin 2 = 0 V , f = 1 MHz, V_{BIAS} = 2.5 V, channel_x pin to ground – channel_y pin to ground			0.025	0.07	pF
V_{BR}	Break-down voltage, IO to GND	I_{IO} = 1 mA		6.5		8.5	V
I_{LEAK}	Leakage current	V_{IO} = 2.5 V			1	10	nA

(1) Non-repetitive current pulse 8/20 µs exponentially decaying waveform according to IEC61000-4-5.
(2) Extraction of R_{DYN} using least squares fit of TLP characteristics between I = 10 A and I = 20 A.

6.7 Typical Characteristics

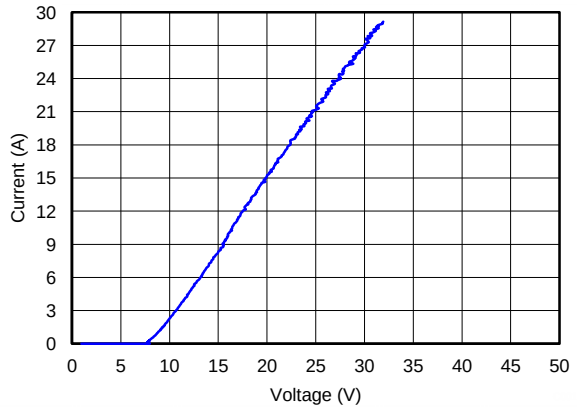

Figure 1. TLP, Data to GND

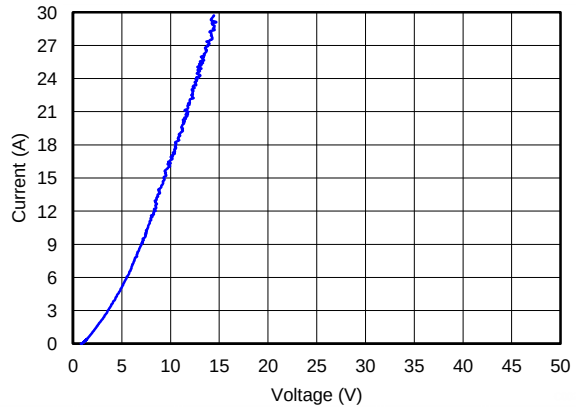

Figure 2. TLP, GND to Data

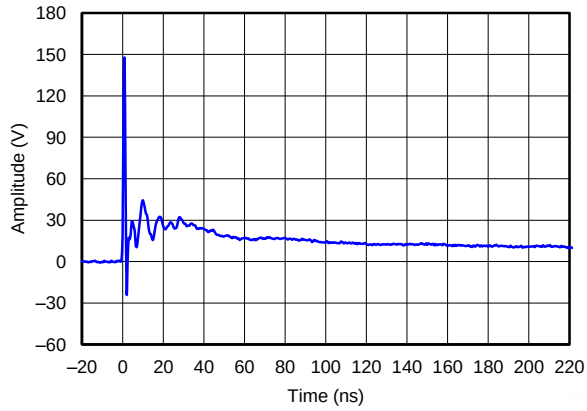

Figure 3. IEC 61000-4-2 Clamping Voltage, 8-kV Contact

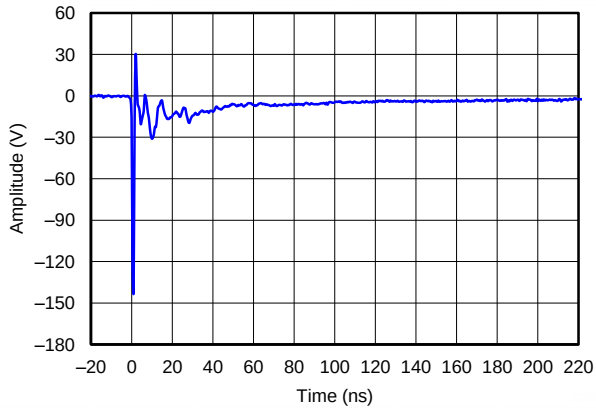

Figure 4. IEC 61000-4-2 Clamping Voltage, –8-kV Contact

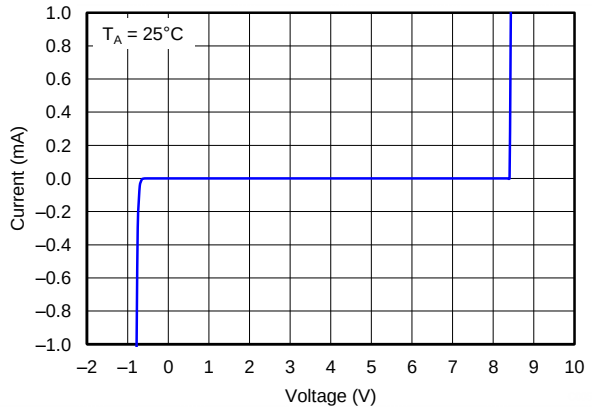

Figure 5. Diode Curve

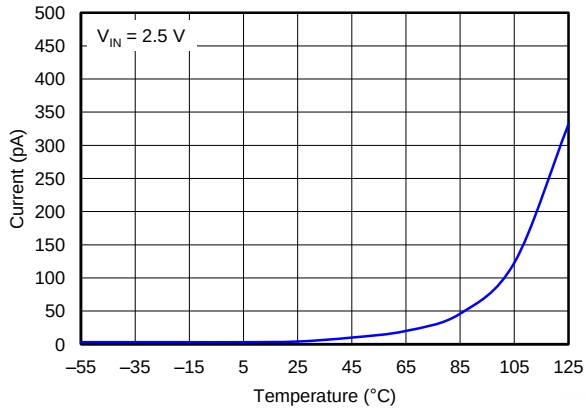

Figure 6. I_{LEAK} vs Temperature

Copyright © 2012–2017, Texas Instruments Incorporated

Typical Characteristics (continued)

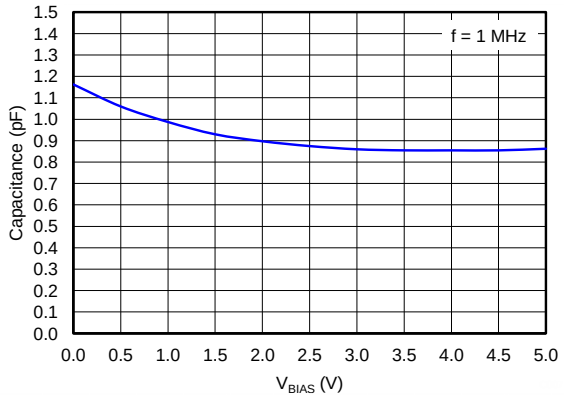

Figure 7. Capacitance Across V_{BIAS}

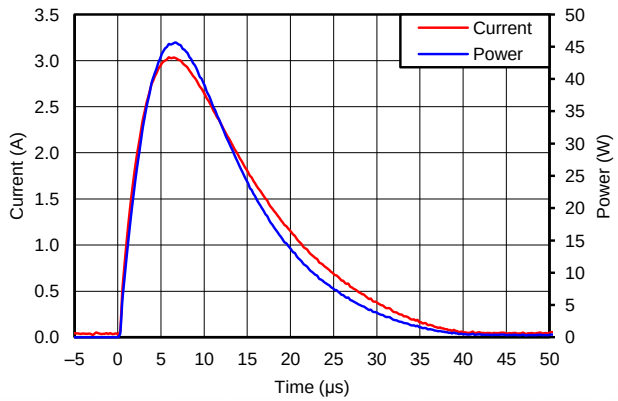

Figure 8. Surge Curve (tp = 8/20 µs), Pin IO to GND

7 Detailed Description

7.1 Overview

The TPD4E1U06 is a quad channel unidirectional TVS ESD protection diode with ultra low capacitance. This device can dissipate ESD strikes above the maximum level specified by the IEC 61000-4-2 international standard. Typical application areas include HDMI, USB2.0, MHL, and DisplayPort. Its 0.8-pF line capacitance makes it suitable for a wide range of applications.

7.2 Functional Block Diagram

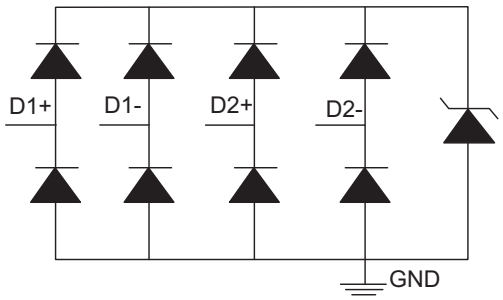

Figure 9. Circuit Schematic Diagram

7.3 Feature Description

7.3.1 IEC 61000-4-2 Level 4 ESD Protection

The I/O pins can withstand ESD events up to ±15-kV contact and air. An ESD/surge clamp diverts the current to ground.

7.3.2 IEC 61000-4-5 Surge Protection

The IO pins can withstand surge events up to 3 A and 45 W (8/20-µs waveform). An ESD-surge clamp diverts this current to ground.

7.3.3 IEC 61000-4-4 EFT Protection

The IO pins can withstand an electrical fast transient burst of up to 80 A (5/50-ns waveform, 4 kV with 50-Ω impedance). An ESD-surge clamp diverts the current to ground.

7.3.4 IO Capacitance

The capacitance between each I/O pin to ground is 0.8 pF.

7.3.5 DC Breakdown Voltage

The DC breakdown voltage of each I/O pin is a minimum of 6.5 V. This ensures that sensitive equipment is protected from surges above the reverse standoff voltage of 5.5 V.

7.3.6 Ultra Low Leakage Current

The I/O pins feature an ultra-low leakage current of 10 nA (Maximum) with a bias of 2.5 V.

7.3.7 Low ESD Clamping Voltage

The I/O pins feature an ESD clamp that is capable of clamping the voltage to 11 V (I_{PP} = 1 A).

7.3.8 Industrial Temperature Range

This device features an industrial operating range of –40°C to +125°C.

Copyright © 2012–2017, Texas Instruments Incorporated

Feature Description (continued)

7.3.9 Small, Easy-to-Route Packages

The layout of this device makes it simple to add protection to the design. Industry standard packages allow for easy additions to the board and easy layout.

7.4 Device Functional Modes

The TPD4E1U06 is a passive integrated circuit that triggers when voltages are above V_{BR} or below the forward diode drop. During ESD events, voltages as high as ±15 kV can be directed to ground via the internal diode network. Once the voltages on the protected line fall below the trigger levels of TPD4E1U06 (usually within 10s of nano-seconds) the device reverts to passive.

8 Application and Implementation

NOTE

Information in the following applications sections is not part of the TI component specification, and TI does not warrant its accuracy or completeness. TI's customers are responsible for determining suitability of components for their purposes. Customers should validate and test their design implementation to confirm system functionality.

8.1 Application Information

The TPD4E1U06 is a TVS diode array which is typically used to provide a path to ground for dissipating ESD events on hi-speed signal lines between a human interface connector and a system. As the current from ESD passes through the TVS, only a small voltage drop is present across the diode. This is the voltage presented to the protected IC. The low R_{DYN} of the triggered TVS holds this voltage, V_{CLAMP}, to a safe level for the protected IC.

8.2 Typical Application

For this design example, one TPD4E1U06 device is being used in a dual USB 2.0 application. This provides a complete port protection scheme.

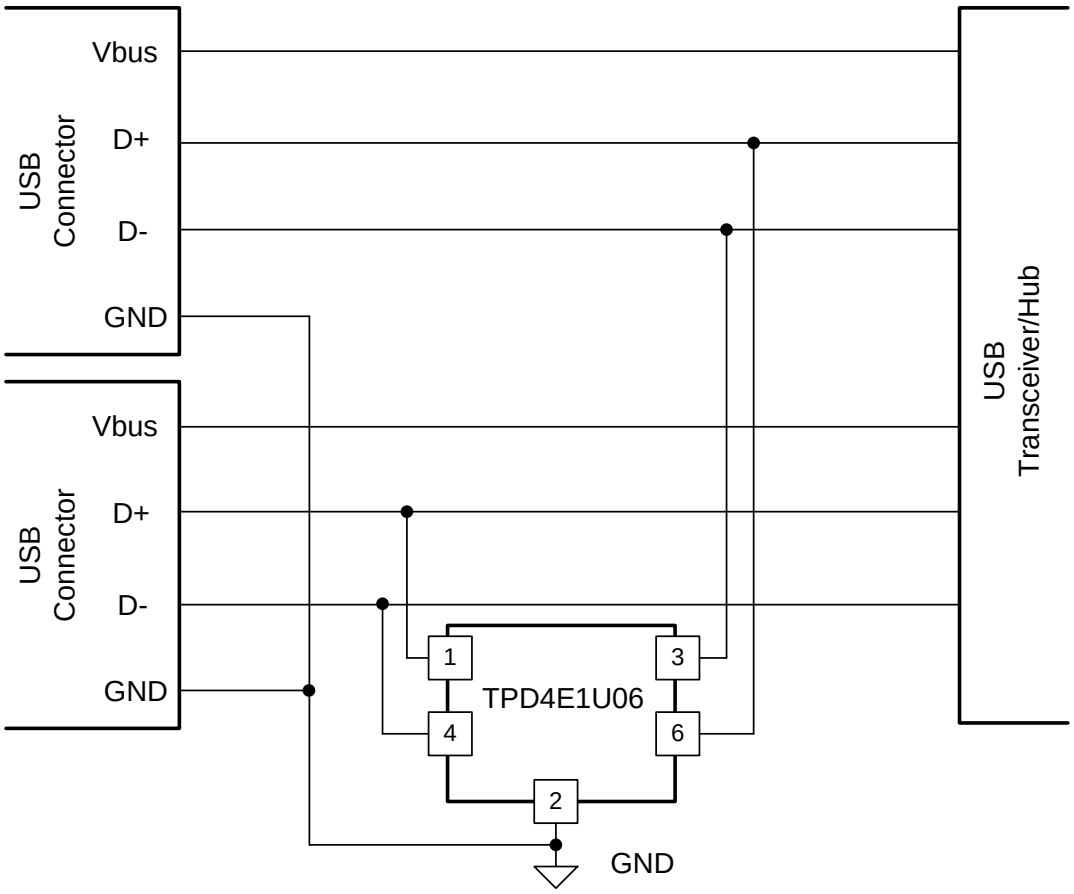

Figure 10. Dual USB 2.0 Application

Copyright © 2012–2017, Texas Instruments Incorporated

Typical Application (continued)

8.2.1 Design Requirements

Given the USB 2.0 application, the parameters in Table 1 are known.

Table 1. Design Parameters

DESIGN PARAMETER	VALUE
Signal range on pins 1, 3, 4, or 6	0 V to 5 V
Operating frequency	240 MHz

8.2.2 Detailed Design Procedure

8.2.2.1 Signal Range on Pins 1, 3, 4, or 6

The TPD4E1U06 has 4 identical protection channels for signal lines. The symmetry of the device provides flexibility when selecting which of the 4 I/O channels protect which signal lines. Any I/O supports a signal range of 0 to 5.5 V.

8.2.2.2 Operating Frequency

The TPD4E1U06 has a capacitance of 0.8 pF (typical), supporting USB 2.0 data rates.

8.2.3 Application Curve

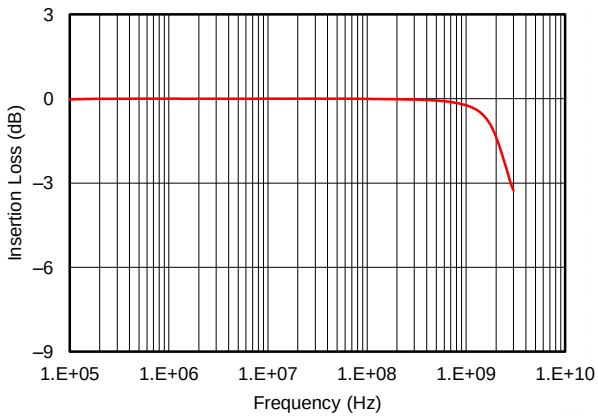

Figure 11. Insertion Loss Graph

9 Power Supply Recommendations

This device is a passive ESD device so there is no need to power it. Take care not to violate the recommended I/O specification (0 V to 5.5 V) to ensure the device functions properly.

10 Layout

10.1 Layout Guidelines

- The optimum placement is as close to the connector as possible.
  - EMI during an ESD event can couple from the trace being struck to other nearby unprotected traces, resulting in early system failures.
  - The PCB designer needs to minimize the possibility of EMI coupling by keeping any unprotected traces away from the protected traces which are between the TVS and the connector.
- Route the protected traces as straight as possible.
- Eliminate any sharp corners on the protected traces between the TVS and the connector by using rounded corners with the largest radii possible.
  - Electric fields tend to build up on corners, increasing EMI coupling.

10.2 Layout Example

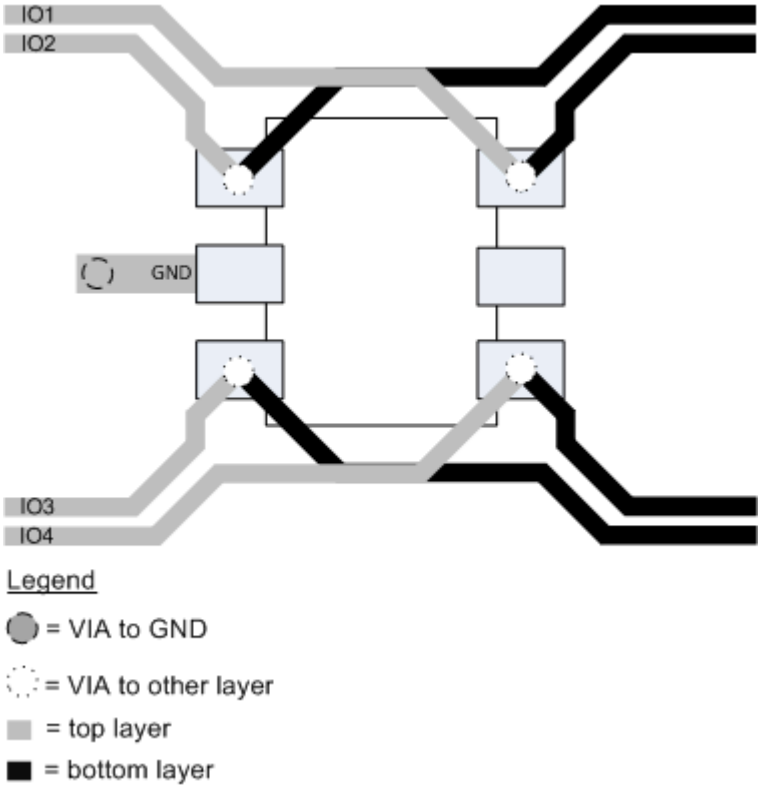

Figure 12. PCB Layout Recommendation

Copyright © 2012–2017, Texas Instruments Incorporated

11 Device and Documentation Support

11.1 Documentation Support

11.1.1 Related Documentation

For related documentation see the following:

- *Reading and Understanding an ESD Protection Datasheet*
- *ESD Layout Guide*
- *TTPD4E1U06DCK EVM User's Guide*
- *TPD4E1U06DBV EVM Userf's Guide*

11.2 Receiving Notification of Documentation Updates

To receive notification of documentation updates—including silicon errata—go to the product folder for your device on ti.com. In the upper right-hand corner, click the *Alert me* button. This registers you to receive a weekly digest of product information that has changed (if any). For change details, check the revision history of any revised document.

11.3 Community Resources

The following links connect to TI community resources. Linked contents are provided "AS IS" by the respective contributors. They do not constitute TI specifications and do not necessarily reflect TI's views; see TI's Terms of Use.

TI E2E™ Online Community ***TI's Engineer-to-Engineer (E2E) Community.*** Created to foster collaboration among engineers. At e2e.ti.com, you can ask questions, share knowledge, explore ideas and help solve problems with fellow engineers.

Design Support ***TI's Design Support*** Quickly find helpful E2E forums along with design support tools and contact information for technical support.

11.4 Trademarks

E2E is a trademark of Texas Instruments.
All other trademarks are the property of their respective owners.

11.5 Electrostatic Discharge Caution

These devices have limited built-in ESD protection. The leads should be shorted together or the device placed in conductive foam during storage or handling to prevent electrostatic damage to the MOS gates.

11.6 Glossary

SLYZ022 — *TI Glossary*.

This glossary lists and explains terms, acronyms, and definitions.

12 Mechanical, Packaging, and Orderable Information

The following pages include mechanical, packaging, and orderable information. This information is the most current data available for the designated devices. This data is subject to change without notice and revision of this document. For browser-based versions of this data sheet, refer to the left-hand navigation.

PACKAGING INFORMATION

Orderable Device	Status (1)	Package Type	Package Drawing	Pins	Package Qty	Eco Plan (2)	Lead finish/ Ball material (6)	MSL Peak Temp (3)	Op Temp (°C)	Device Marking (4/5)	Samples
TPD4E1U06DBVR	ACTIVE	SOT-23	DBV	6	3000	RoHS & Green	SN	Level-1-260C-UNLIM	-40 to 125	(NG4, NG4P)	Samples
TPD4E1U06DCKR	ACTIVE	SC70	DCK	6	3000	RoHS & Green	NIPDAU | SN	Level-1-260C-UNLIM	-40 to 125	(BP6, BP8, BPI) (BPP, BPP, BPS)	Samples

(1) The marketing status values are defined as follows:
ACTIVE: Product device recommended for new designs.
LIFEBUY: TI has announced that the device will be discontinued, and a lifetime-buy period is in effect.
NRND: Not recommended for new designs. Device is in production to support existing customers, but TI does not recommend using this part in a new design.
PREVIEW: Device has been announced but is not in production. Samples may or may not be available.
OBSOLETE: TI has discontinued the production of the device.

(2) **RoHS:** TI defines "RoHS" to mean semiconductor products that are compliant with the current EU RoHS requirements for all 10 RoHS substances, including the requirement that RoHS substance do not exceed 0.1% by weight in homogeneous materials. Where designed to be soldered at high temperatures, "RoHS" products are suitable for use in specified lead-free processes. TI may reference these types of products as "Pb-Free".
RoHS Exempt: TI defines "RoHS Exempt" to mean products that contain lead but are compliant with EU RoHS pursuant to a specific EU RoHS exemption.
Green: TI defines "Green" to mean the content of Chlorine (Cl) and Bromine (Br) based flame retardants meet JS709B low halogen requirements of <=1000ppm threshold. Antimony trioxide based flame retardants must also meet the <=1000ppm threshold requirement.

(3) MSL, Peak Temp. - The Moisture Sensitivity Level rating according to the JEDEC industry standard classifications, and peak solder temperature.

(4) There may be additional marking, which relates to the logo, the lot trace code information, or the environmental category on the device.

(5) Multiple Device Markings will be inside parentheses. Only one Device Marking contained in parentheses and separated by a "~" will appear on a device. If a line is indented then it is a continuation of the previous line and the two combined represent the entire Device Marking for that device.

(6) Lead finish/Ball material - Orderable Devices may have multiple material finish options. Finish options are separated by a vertical ruled line. Lead finish/Ball material values may wrap to two lines if the finish value exceeds the maximum column width.

Important Information and Disclaimer: The information provided on this page represents TI's knowledge and belief as of the date that it is provided. TI bases its knowledge and belief on information provided by third parties, and makes no representation or warranty as to the accuracy of such information. Efforts are underway to better integrate information from third parties. TI has taken and continues to take reasonable steps to provide representative and accurate information but may not have conducted destructive testing or chemical analysis on incoming materials and chemicals. TI and TI suppliers consider certain information to be proprietary, and thus CAS numbers and other limited information may not be available for release.

In no event shall TI's liability arising out of such information exceed the total purchase price of the TI part(s) at issue in this document sold by TI to Customer on an annual basis.

TAPE AND REEL INFORMATION

REEL DIMENSIONS

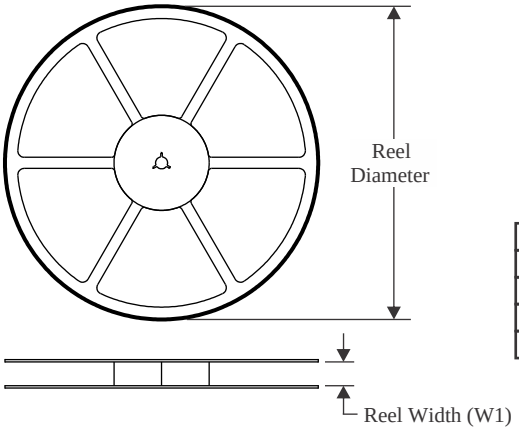

TAPE DIMENSIONS

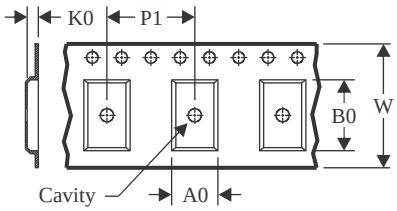

A0	Dimension designed to accommodate the component width
B0	Dimension designed to accommodate the component length
K0	Dimension designed to accommodate the component thickness
W	Overall width of the carrier tape
P1	Pitch between successive cavity centers

QUADRANT ASSIGNMENTS FOR PIN 1 ORIENTATION IN TAPE

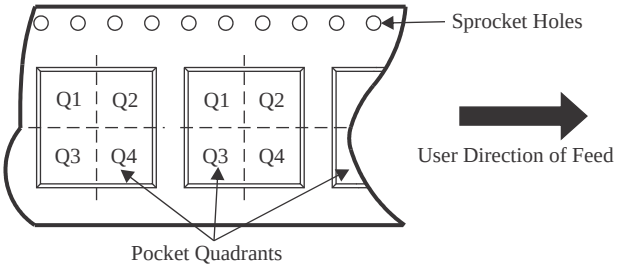

*All dimensions are nominal

Device	Package Type	Package Drawing	Pins	SPQ	Reel Diameter (mm)	Reel Width W1 (mm)	A0 (mm)	B0 (mm)	K0 (mm)	P1 (mm)	W (mm)	Pin1 Quadrant
TPD4E1U06DBVR	SOT-23	DBV	6	3000	180.0	8.4	3.2	3.2	1.4	4.0	8.0	Q3
TPD4E1U06DCKR	SC70	DCK	6	3000	180.0	8.4	2.3	2.5	1.2	4.0	8.0	Q3

TAPE AND REEL BOX DIMENSIONS

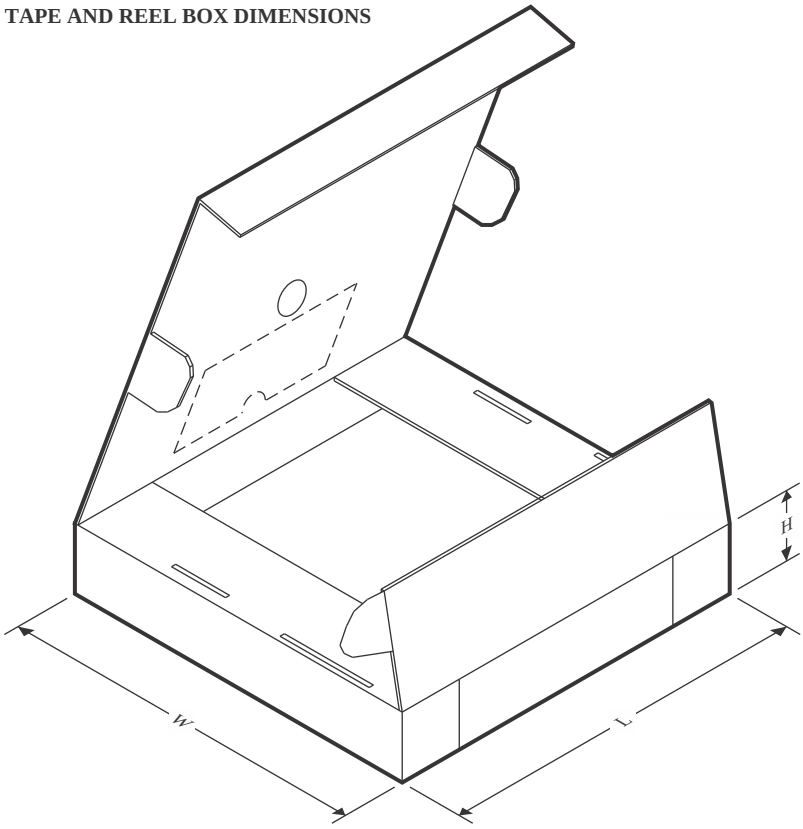

*All dimensions are nominal

Device	Package Type	Package Drawing	Pins	SPQ	Length (mm)	Width (mm)	Height (mm)
TPD4E1U06DBVR	SOT-23	DBV	6	3000	210.0	185.0	35.0
TPD4E1U06DCKR	SC70	DCK	6	3000	210.0	185.0	35.0

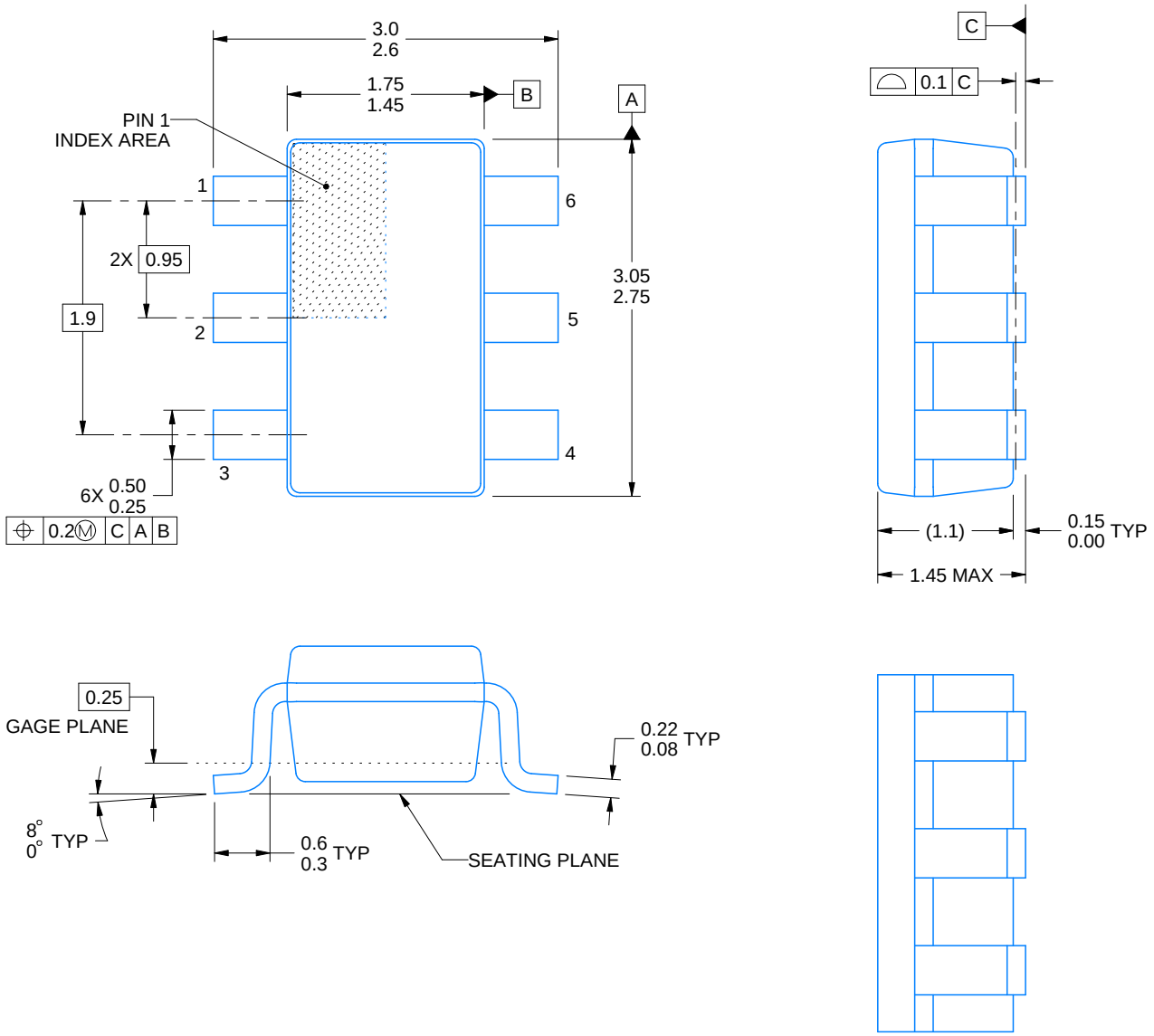

ALTERNATIVE PACKAGE SINGULATION VIEW

4214840/E 02/2024

NOTES:

1. All linear dimensions are in millimeters. Any dimensions in parenthesis are for reference only. Dimensioning and tolerancing per ASME Y14.5M.
2. This drawing is subject to change without notice.
3. Body dimensions do not include mold flash or protrusion. Mold flash and protrusion shall not exceed 0.25 per side.
4. Leads 1,2,3 may be wider than leads 4,5,6 for package orientation.
5. Refernce JEDEC MO-178.

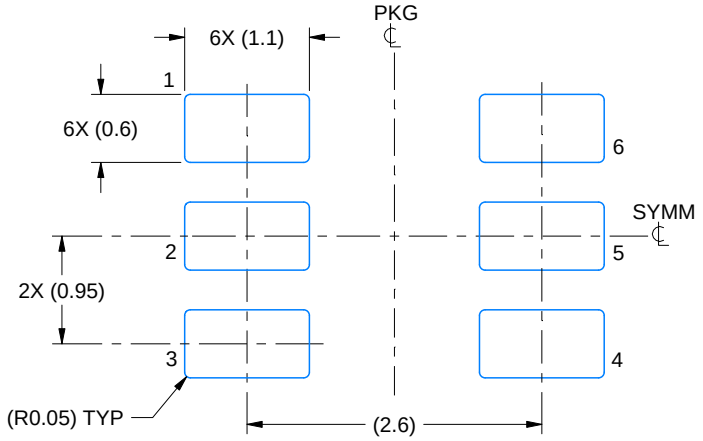

LAND PATTERN EXAMPLE
EXPOSED METAL SHOWN
SCALE:15X

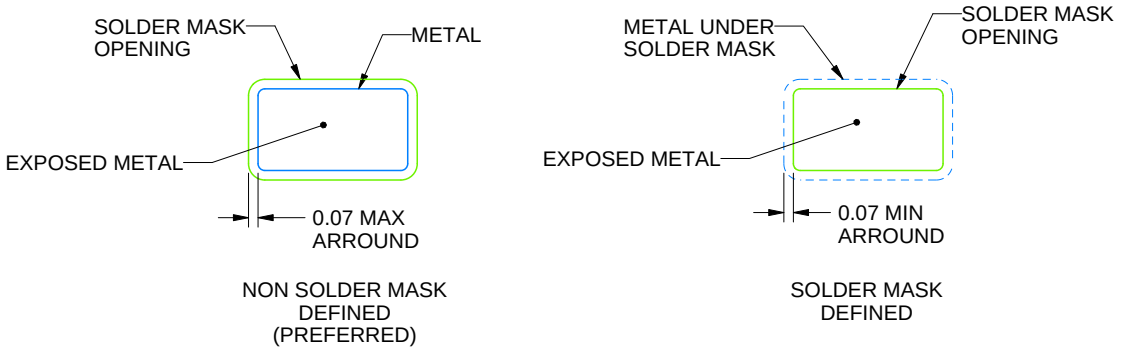

SOLDER MASK DETAILS

4214840/E 02/2024

NOTES: (continued)

6. Publication IPC-7351 may have alternate designs.
7. Solder mask tolerances between and around signal pads can vary based on board fabrication site.

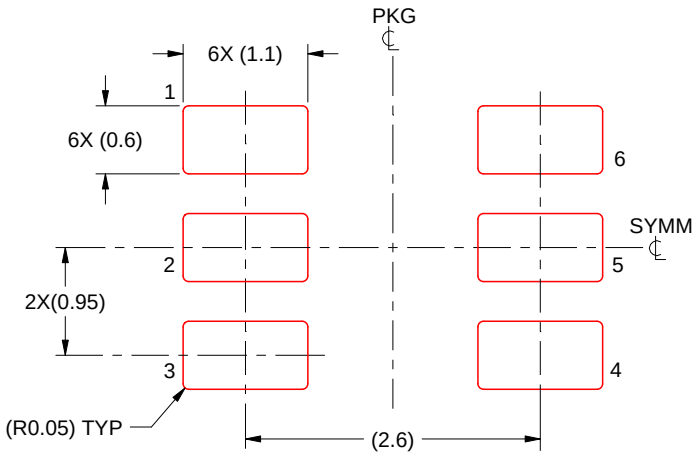

SOLDER PASTE EXAMPLE
BASED ON 0.125 mm THICK STENCIL
SCALE:15X

4214840/E 02/2024

NOTES: (continued)

8. Laser cutting apertures with trapezoidal walls and rounded corners may offer better paste release. IPC-7525 may have alternate design recommendations.
9. Board assembly site may have different recommendations for stencil design.

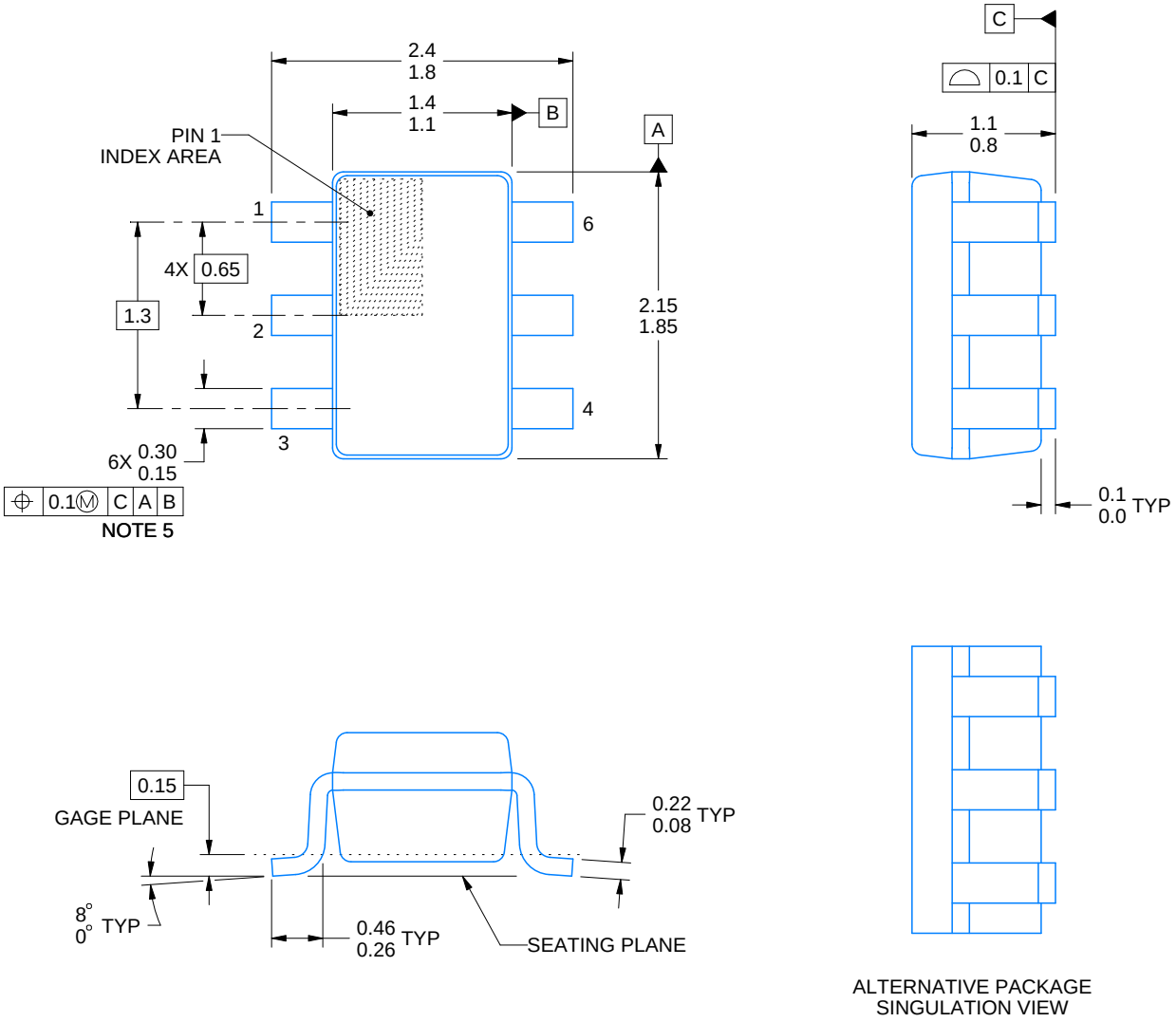

4214835/B 04/2024

NOTES:

1. All linear dimensions are in millimeters. Any dimensions in parenthesis are for reference only. Dimensioning and tolerancing per ASME Y14.5M.
2. This drawing is subject to change without notice.
3. Body dimensions do not include mold flash or protrusion. Mold flash and protrusion shall not exceed 0.15 per side.
4. Falls within JEDEC MO-203 variation AB.

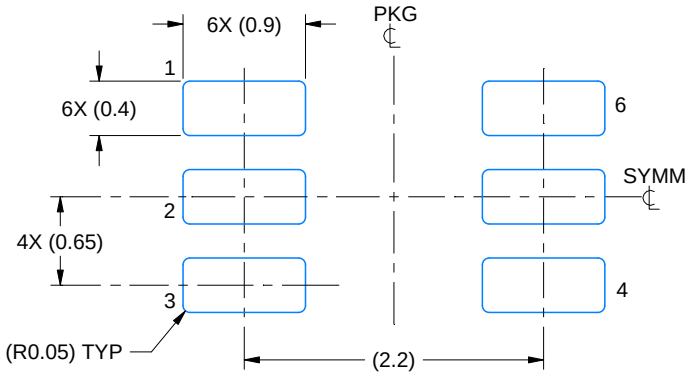

LAND PATTERN EXAMPLE
EXPOSED METAL SHOWN
SCALE:18X

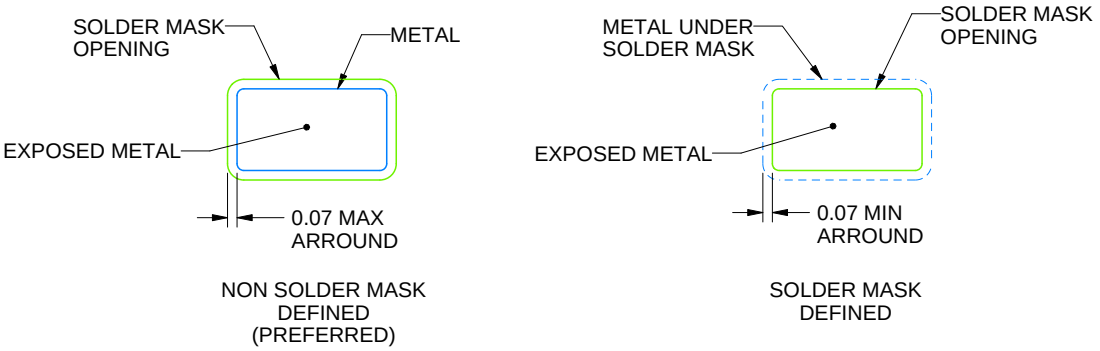

SOLDER MASK DETAILS

4214835/B 04/2024

NOTES: (continued)

5. Publication IPC-7351 may have alternate designs.
6. Solder mask tolerances between and around signal pads can vary based on board fabrication site.

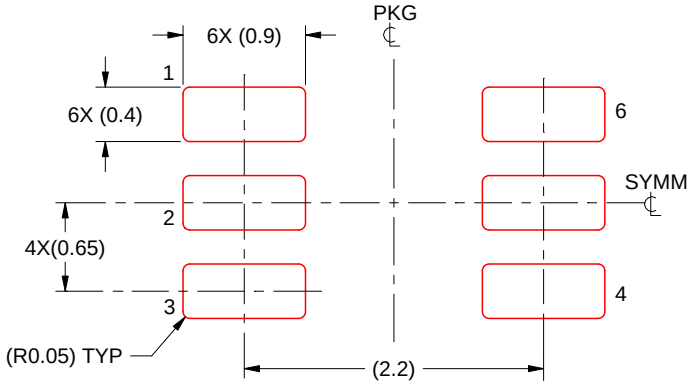

SOLDER PASTE EXAMPLE
BASED ON 0.125 THICK STENCIL
SCALE:18X

4214835/B 04/2024

NOTES: (continued)

7. Laser cutting apertures with trapezoidal walls and rounded corners may offer better paste release. IPC-7525 may have alternate design recommendations.
8. Board assembly site may have different recommendations for stencil design.

IMPORTANT NOTICE AND DISCLAIMER

TI PROVIDES TECHNICAL AND RELIABILITY DATA (INCLUDING DATA SHEETS), DESIGN RESOURCES (INCLUDING REFERENCE DESIGNS), APPLICATION OR OTHER DESIGN ADVICE, WEB TOOLS, SAFETY INFORMATION, AND OTHER RESOURCES “AS IS” AND WITH ALL FAULTS, AND DISCLAIMS ALL WARRANTIES, EXPRESS AND IMPLIED, INCLUDING WITHOUT LIMITATION ANY IMPLIED WARRANTIES OF MERCHANTABILITY, FITNESS FOR A PARTICULAR PURPOSE OR NON-INFRINGEMENT OF THIRD PARTY INTELLECTUAL PROPERTY RIGHTS.

These resources are intended for skilled developers designing with TI products. You are solely responsible for (1) selecting the appropriate TI products for your application, (2) designing, validating and testing your application, and (3) ensuring your application meets applicable standards, and any other safety, security, regulatory or other requirements.

These resources are subject to change without notice. TI grants you permission to use these resources only for development of an application that uses the TI products described in the resource. Other reproduction and display of these resources is prohibited. No license is granted to any other TI intellectual property right or to any third party intellectual property right. TI disclaims responsibility for, and you will fully indemnify TI and its representatives against, any claims, damages, costs, losses, and liabilities arising out of your use of these resources.

TI’s products are provided subject to TI’s Terms of Sale or other applicable terms available either on ti.com or provided in conjunction with such TI products. TI’s provision of these resources does not expand or otherwise alter TI’s applicable warranties or warranty disclaimers for TI products.

TI objects to and rejects any additional or different terms you may have proposed.

Mailing Address: Texas Instruments, Post Office Box 655303, Dallas, Texas 75265
Copyright © 2024, Texas Instruments Incorporated

Looking for pricing, stock, or lifecycle information?

Click below to explore more details on WIN SOURCE:

- View TPD4E1U06DBVR on WIN SOURCE
- Texas Instruments Information

Optimize Your Supply Chain with WIN SOURCE Solutions

- Global Sourcing Solution
- Obsolete Management
- Cost Control Management
- Shortage Management
- Alternative Solution
- Excess Inventory Management