4V Drive Nch MOSFET

RSH065N03

●Structure
Silicon N-channel MOSFET

●Features
1) Low on-resistance.
2) Built-in G-S Protection Diode.
3) Small Surface Mount Package (SOP8).

●Application
Power switching, DC / DC converter.

●Dimensions (Unit : mm)

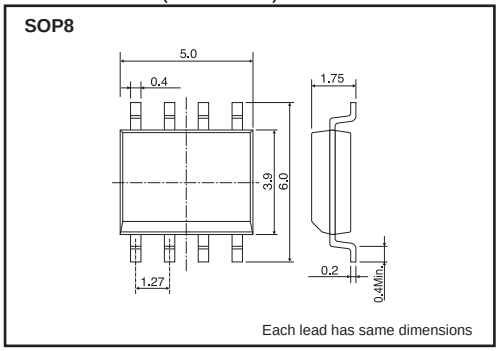

●Packaging specifications

Type	Package	Taping
	Code	TB
	Basic ordering unit (pieces)	2500
RSH065N03		○

●Inner circuit

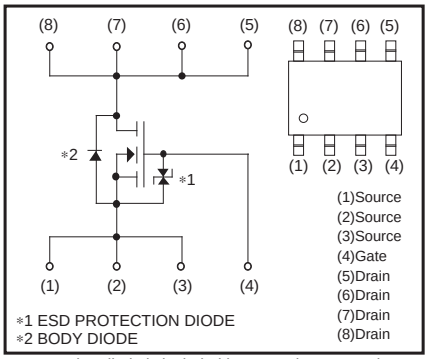

*A protection diode is included between the gate and the source terminals to protect the diode against static electricity when the product is in use. Use the protection circuit when the fixed voltages are exceeded.

●Absolute maximum ratings (Ta=25°C)

Parameter		Symbol	Limits	Unit
Drain-source voltage		V_{DSS}	30	V
Gate-source voltage		V_{GSS}	±20	V
Drain current	Continuous	I_D	±6.5	A
	Pulsed	I_{DP} *1	±26	A
Source current (Body diode)	Continuous	I_S	1.6	A
	Pulsed	I_{SP} *1	6.4	A
Total power dissipation		P_D *2	2	W
Channel temperature		Tch	150	°C
Storage temperature		Tstg	–55 to +150	°C

*1 Pw≤10μs, Duty cycle≤1%
*2 Mounted on a ceramic board.

●Thermal resistance

Parameter	Symbol	Limits	Unit
Channel to ambient	Rth (ch-a)*	62.5	°C / W

* Mounted on a ceramic board.

© 2009 ROHM Co., Ltd. All rights reserved.

●Electrical characteristics (Ta=25°C)

Parameter	Symbol	Min.	Typ.	Max.	Unit	Conditions
Gate-source leakage	I_{GSS}	–	–	1	μA	V_{GS}=20V, V_{DS}=0V
Drain-source breakdown voltage	$V_{(BR)\ DSS}$	30	–	–	V	I_D=1mA, V_{GS}=0V
Zero gate voltage drain current	I_{DSS}	–	–	10	μA	V_{DS}=30V, V_{GS}=0V
Gate threshold voltage	$V_{GS\ (th)}$	1.0	–	2.5	V	V_{DS}=10V, I_D=1mA
Static drain-source on-starte resistance	$R_{DS\ (on)}$ *	–	19	27	mΩ	I_D=6.5A, V_{GS}=10V
		–	27	38		I_D=6.5A, V_{GS}=4.5V
		–	30	42		I_D=6.5A, V_{GS}=4V
Forward transfer admittance	$\lvert Y_{fs} \rvert$ *	4.0	–	–	S	I_D=6.5A, V_{DS}=10V
Input capacitance	C_{iss}	–	430	–	pF	V_{DS}=10V
Output capacitance	C_{oss}	–	155	–	pF	V_{GS}=0V
Reverse transfer capacitance	C_{rss}	–	80	–	pF	f=1MHz
Turn-on delay time	$t_{d\ (on)}$ *	–	8	–	ns	I_D=3.25A, V_{DD}≒15V
Rise time	t_r *	–	8	–	ns	V_{GS}=10V
Turn-off delay time	$t_{d\ (off)}$ *	–	31	–	ns	R_L=4.62Ω
Fall time	t_f *	–	8	–	ns	R_G=10Ω
Total gate charge	Q_g *	–	6.1	8.6	nC	V_{DD}≒15V
Gate-source charge	Q_{gs} *	–	1.5	–	nC	V_{GS}=5V
Gate-drain charge	Q_{gd} *	–	2.3	–	nC	I_D=6.5A

*Pulsed

●Body diode characteristics (Source-Drain) (Ta=25°C)

Parameter	Symbol	Min.	Typ.	Max.	Unit	Conditions
Forward voltage	V_{SD} *	–	–	1.2	V	I_S=6.4A, V_{GS}=0V

*Pulsed

© 2009 ROHM Co., Ltd. All rights reserved.

●Electrical characteristic curves

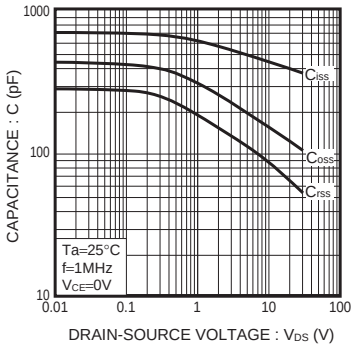

Fig.1 Typical Capacitance vs. Drain-Source Voltage

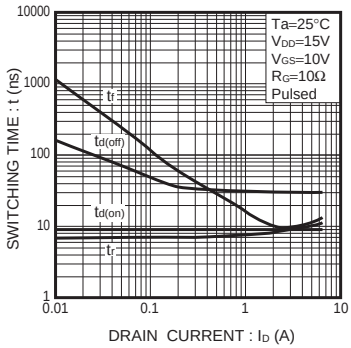

Fig.2 Switching Characteristics

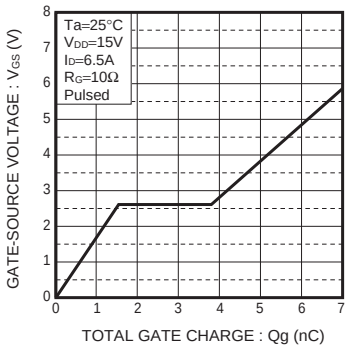

Fig.3 Dynamic Input Characteristics

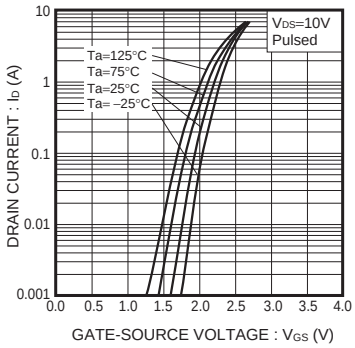

Fig.4 Typical Transfer Characteristics

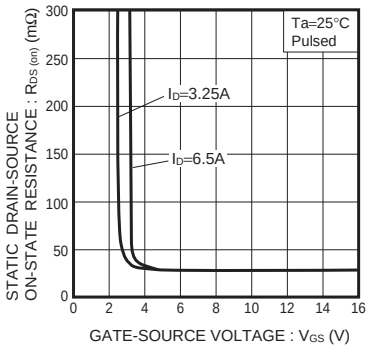

Fig.5 Static Drain-Source On-State Resistance vs. Gate-Source Voltage

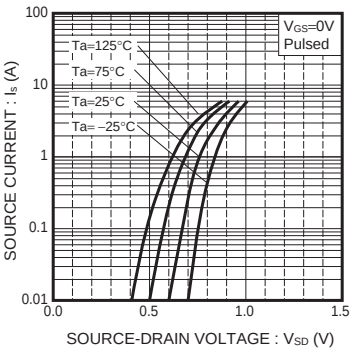

Fig.6 Source Current vs. Source-Drain Voltage

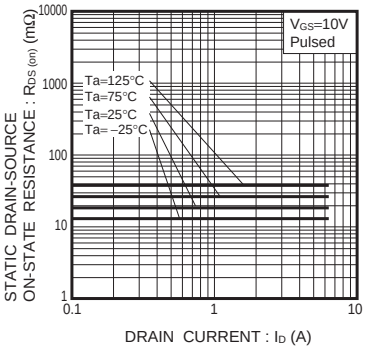

Fig.7 Static Drain-Source On-State Resistance vs. Drain Current (I)

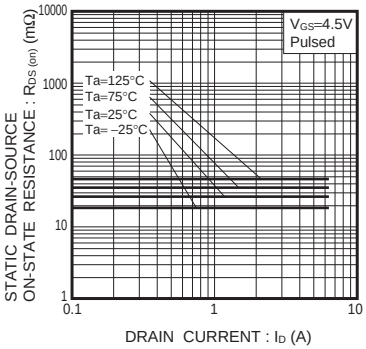

Fig.8 Static Drain-Source On-State Resistance vs. Drain Current (II)

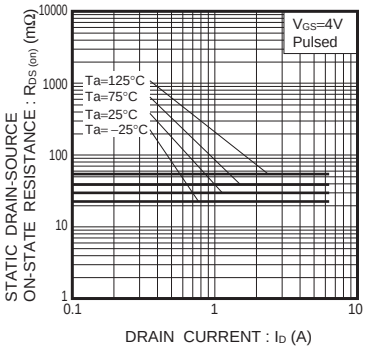

Fig.9 Static Drain-Source On-State Resistance vs. Drain Current (III)

© 2009 ROHM Co., Ltd. All rights reserved.

Notes

No copying or reproduction of this document, in part or in whole, is permitted without the consent of ROHM Co.,Ltd.

The content specified herein is subject to change for improvement without notice.

The content specified herein is for the purpose of introducing ROHM's products (hereinafter "Products"). If you wish to use any such Product, please be sure to refer to the specifications, which can be obtained from ROHM upon request.

Examples of application circuits, circuit constants and any other information contained herein illustrate the standard usage and operations of the Products. The peripheral conditions must be taken into account when designing circuits for mass production.

Great care was taken in ensuring the accuracy of the information specified in this document. However, should you incur any damage arising from any inaccuracy or misprint of such information, ROHM shall bear no responsibility for such damage.

The technical information specified herein is intended only to show the typical functions of and examples of application circuits for the Products. ROHM does not grant you, explicitly or implicitly, any license to use or exercise intellectual property or other rights held by ROHM and other parties. ROHM shall bear no responsibility whatsoever for any dispute arising from the use of such technical information.

The Products specified in this document are intended to be used with general-use electronic equipment or devices (such as audio visual equipment, office-automation equipment, communication devices, electronic appliances and amusement devices).

The Products specified in this document are not designed to be radiation tolerant.

While ROHM always makes efforts to enhance the quality and reliability of its Products, a Product may fail or malfunction for a variety of reasons.

Please be sure to implement in your equipment using the Products safety measures to guard against the possibility of physical injury, fire or any other damage caused in the event of the failure of any Product, such as derating, redundancy, fire control and fail-safe designs. ROHM shall bear no responsibility whatsoever for your use of any Product outside of the prescribed scope or not in accordance with the instruction manual.

The Products are not designed or manufactured to be used with any equipment, device or system which requires an extremely high level of reliability the failure or malfunction of which may result in a direct threat to human life or create a risk of human injury (such as a medical instrument, transportation equipment, aerospace machinery, nuclear-reactor controller, fuel-controller or other safety device). ROHM shall bear no responsibility in any way for use of any of the Products for the above special purposes. If a Product is intended to be used for any such special purpose, please contact a ROHM sales representative before purchasing.

If you intend to export or ship overseas any Product or technology specified herein that may be controlled under the Foreign Exchange and the Foreign Trade Law, you will be required to obtain a license or permit under the Law.

ROHM SEMICONDUCTOR

Thank you for your accessing to ROHM product informations.
More detail product informations and catalogs are available, please contact us.

ROHM Customer Support System

http://www.rohm.com/contact/

© 2009 ROHM Co., Ltd. All rights reserved.

Looking for pricing, stock, or lifecycle information?

Click below to explore more details on WIN SOURCE:

- View RSH065N03TB1 on WIN SOURCE
- Rohm Semiconductor Information

Optimize Your Supply Chain with WIN SOURCE Solutions

- Global Sourcing Solution
- Obsolete Management
- Cost Control Management
- Shortage Management
- Alternative Solution
- Excess Inventory Management