THE DATASHEET OF

CDBB160-G

www.win-source.net 0086-755-83957316

CDBB140-HF Thru. CDBB1100-HF

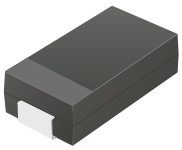

Reverse Voltage: 40 to 100 Volts
Forward Current: 1.0 Amp
RoHS Device
Halogen Free

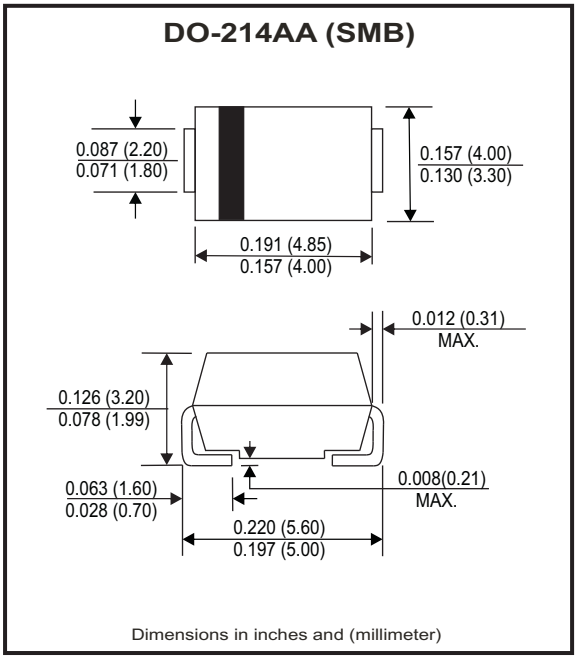

Features

- -Low Profile surface mount applications in order to optimize board space.
- -Low power loss, high efficiency.
- -High current capability, low forward voltage drop.
- -High surge capability.
- -Guard ring for overvoltage protection.
- -Ultra high-speed switching.
- -Silicon epitaxial planar chip,metal silicon junction.

Mechanical data

- -Epoxy: UL94-V0 rate flame retardant.
- -Case: Molded plastic, DO-214AA / SMB
- -Terminals: solderable per MIL-STD-750, method 2026.
- -Polarity: Indicated by cathode band.
- -weight: 0.091 grams

Maximum Ratings and Electrical Characteristics

Ratings at Ta=25°C unless otherwise noted.
Single phase, half wave, 60Hz, resistive or inductive loaded.
For capacitive load, derate current by 20% .

Parameter	Symbol	CDBB 140-HF	CDBB 160-HF	CDBB 1100-HF	Units
Max. Repetitive peak reverse voltage	V_{RRM}	40	60	100	V
Max. DC blocking voltage	V_{DC}	40	60	100	V
Max. RMS voltage	V_{RMS}	28	42	70	V
Max. instantaneous forward voltage @1.0A, T_A=25°C	V_F	0.50	0.70	0.81	V
Operating Temperature	T_J	-50 to +150			°C

Parameter	Conditions	Symbol	MIN.	TYP.	MAX.	Units
forward rectified current	see Fig.1	I_O			1.0	A
forward surge current	8.3ms single half sine-wave superimposed on rate load (JEDEC method)	I_{FSM}			30	A
Reverse Current	V_R =V_{RRM} T_A=25°C	I_R			0.5	mA
	V_R =V_{RRM} T_A=100°C	I_R			20	mA
Thermal Resistance	Junction to ambient	$R_{\theta JA}$		88		°C/W
Diode Junction capacitance	f=1MHz and applied 4V DC reverse Voltage	C_J		120		pF
Storage temperature		T_{STG}	-50		+175	°C

Company reserves the right to improve product design , functions and reliability without notice.

RATING AND CHARACTERISTIC CURVES (CDBB140-HF thru. CDBB1100-HF)

Fig.1 - Typical Forward Current Derating Curve

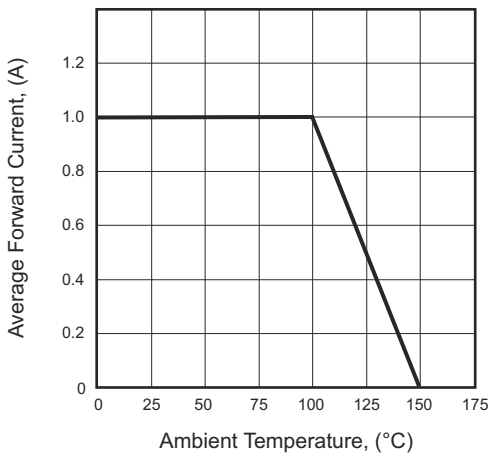

Fig.2 - Typical Forward Characteristics

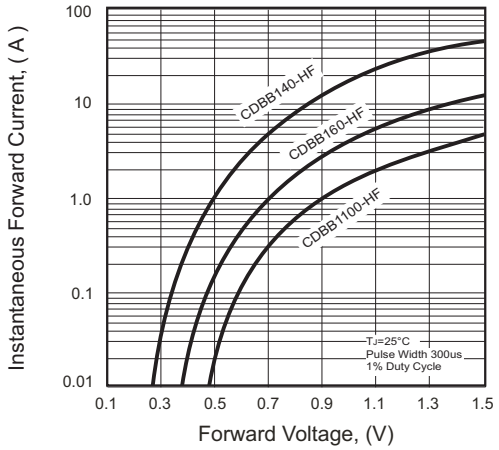

Fig.3 - Maximum Non-repetitive Forward Surge Current

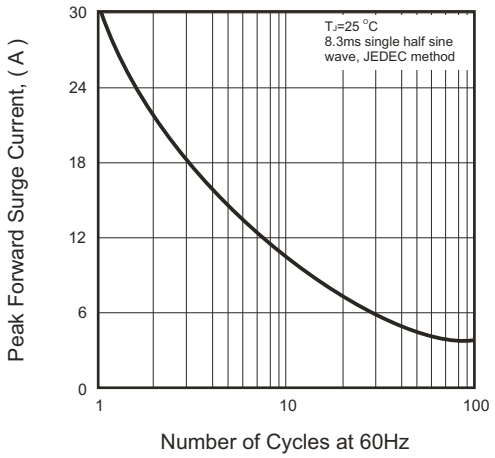

Fig.4 - Typical Junction Capacitance

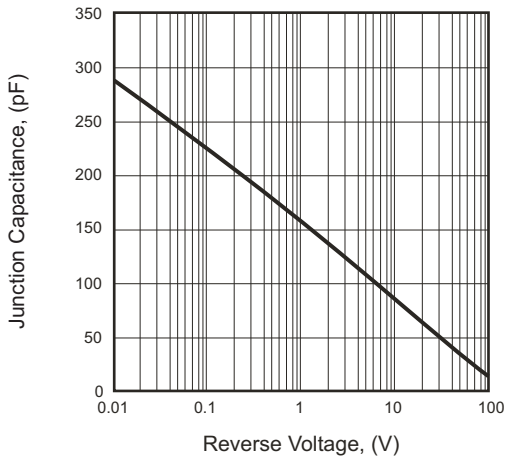

Fig.5- Typical Reverse Characteristics

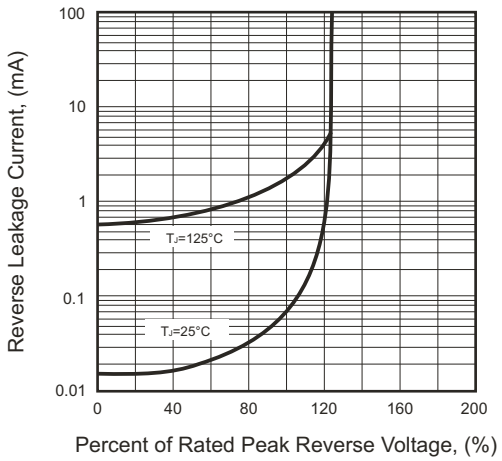

Company reserves the right to improve product design , functions and reliability without notice.

Reel Taping Specification

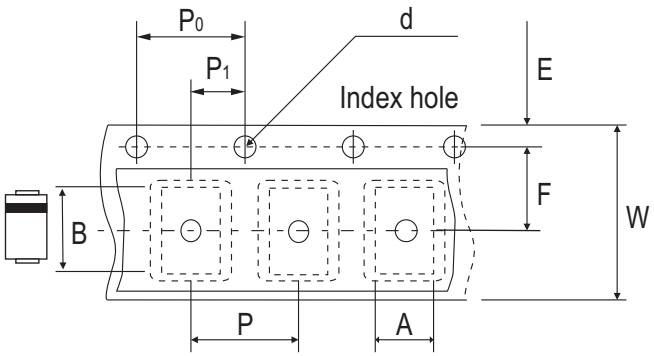

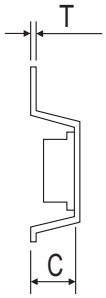

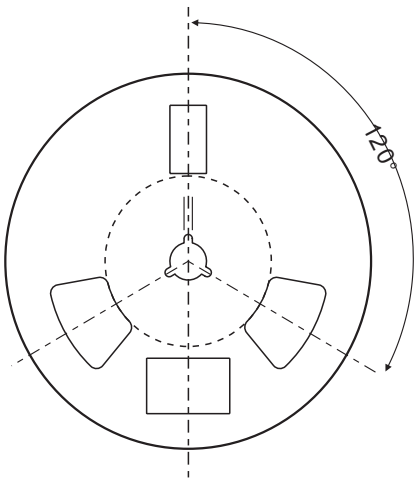

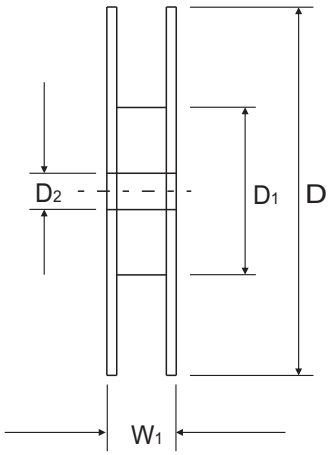

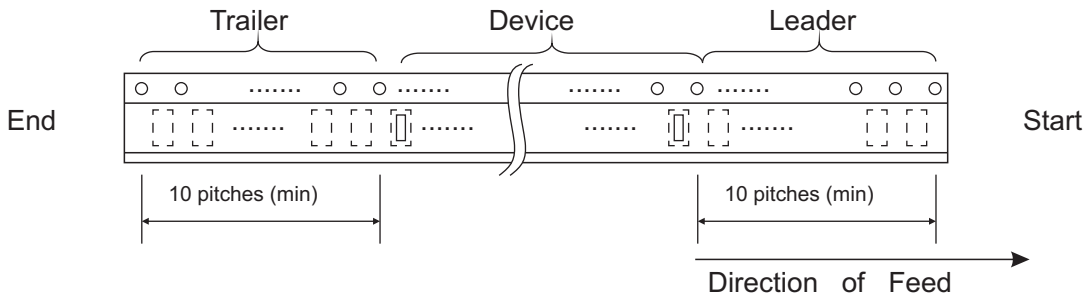

	SYMBOL	A	B	C	d	D	D1	D2
DO-214AA (SMB)	(mm)	4.00 ± 0.10	5.90 ± 0.10	3.00 ± 0.10	1.50 ± 0.10	330 ± 2.00	50.0 MIN.	13.50 ± 0.50
	(inch)	0.157 ± 0.004	0.232 ± 0.004	0.118 ± 0.004	0.059 ± 0.004	12.99 ± 0.079	1.969 MIN.	0.531 ± 0.020

	SYMBOL	E	F	P	P0	P1	T	W	W1
DO-214AA (SMB)	(mm)	1.75 ± 0.10	5.50 ± 0.10	8.00 ± 0.10	4.00 ± 0.10	2.00 ± 0.10	0.60 ± 0.10	12.0 ± 0.30	18.4 ± 1.00
	(inch)	0.069 ± 0.004	0.217 ± 0.004	0.315± 0.004	0.157 ± 0.004	0.079 ± 0.004	0.236 ± 0.004	0.472 ±0.012	0.724 ± 0.040

Company reserves the right to improve product design , functions and reliability without notice.

Marking Code

Part Number	Marking Code
CDBB140-HF	140
CDBB160-HF	160
CDBB1100-HF	1100

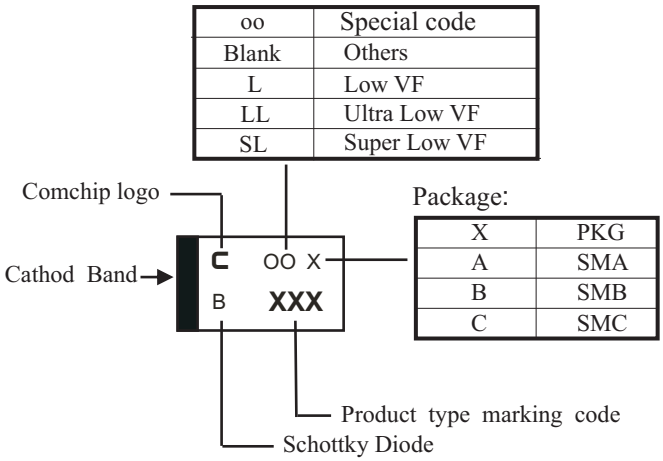

xxx/xxxx = Product type marking code

Suggested PAD Layout

SIZE	DO-214AA (SMB)	
	(mm)	(inch)
A	4.30	0.169
B	2.50	0.098
C	2.30	0.091
D	6.80	0.268
E	1.80	0.071

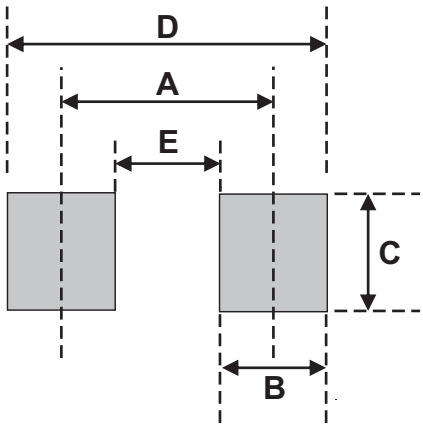

Standard Packaging

Case Type	REEL PACK	
	REEL (pcs)	Reel Size (inch)
DO-214AA (SMB)	3,000	13

Looking for pricing, stock, or lifecycle information?

Click below to explore more details on WIN SOURCE:

- View CDBB160-G on WIN SOURCE
- Comchip Technology Information

Optimize Your Supply Chain with WIN SOURCE Solutions

- Global Sourcing Solution
- Obsolete Management
- Cost Control Management
- Shortage Management
- Alternative Solution
- Excess Inventory Management