Innovative Service Around the Globe YAGEO

PRODUCT SELECTION GUIDE
2014

SMD RESISTORS + MLCC

SMD CERAMIC EMI FILTER CAPACITORS - X2Y®

WIRELESS COMPONENTS

MULTILAYER CHIP VARISTORS

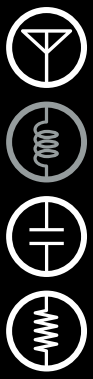

www.yageo.com

YAGEO
Phycomp

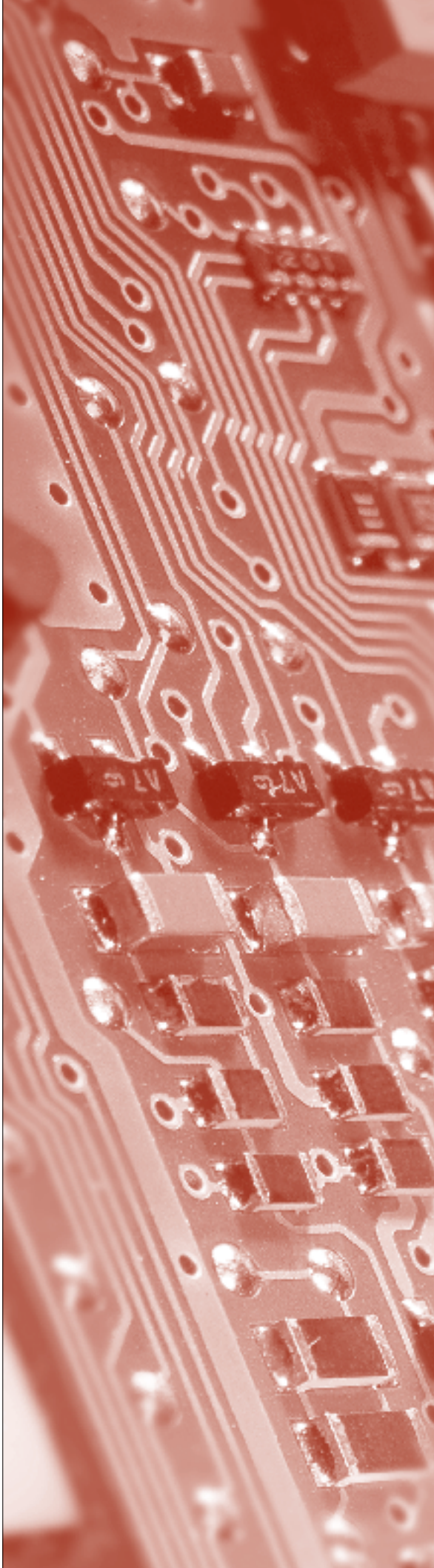

Part numbering system and ordering

You can order components from this catalogue in two ways. Both ways give logistic and packing information.

- **Clear text ordering code**
  This unique number is an easily-readable code.
  - 15 digits code (PHYCOMP CTC)
  - 14 to 17 digits code (GLOBAL PART NUMBER for both Yageo and Phycomp branded products)
- **12 digits ordering code**
  This unique 12NC number forms the basis of the Phycomp logistic system.

You will find details for ordering in the "*Ordering"* section next to each selection chart.

Minimum shipment quantities, prices and delivering details can be obtained from the Yageo sales organization in your country or from one of our franchised distributors.

Case size codes

Throughout this catalogue, inch-based codes are used for the component sizes. According to IEC 60384-10, amendment 2 of September 2000 for MLCCs, and IEC 60115-8, amendment 1 of July 2000 for R-chip. Values for length and width should be in millimeters rather than in inches. To distinguish between inch-based codes and metric-based codes, metric-based codes will temporarily have the suffix ''M''. The table right next shows the relation between inch-based case sizes versus the recommended metric case size designators. Please note that HF products use metric case size only.

Case size designation and cross-reference					
Inch-based	Metric	Inch-based	Metric	Inch-based	Metric
0050	0201M	0606	1616M	1224	3250M
0075	03015M	0612	1632M	1225	3264M
01005	0402M	0616	1640M	1812	4532M
0201	0603M	0805	2012M	2007	5320M
0202	0605M	0815	2037M	2010	5025M
0402	1005M	0830	2075M	2220	5750M
0404	1010M	1008	2520M	2512	6432M
0408	1020M	1206	3216M	3014	7836M
0508	1220M	1210	3225M	4527	11070M
0603	1608M	1218	3245M		

Contact us

Founded in 1977, the Yageo Corporation has become a world-class provider of passive-component services with capabilities on a global scale, including production and sales facilities in Asia, Europe and America. The corporation is uniquely positioned to provide one-stop-shopping, offering its complete product portfolio of resistors, capacitors and inductors in both commodity and specialty versions, plus design-in capability, distribution, e-commerce connection and logistics. Yageo markets its products under the product brand names Yageo, Phycomp and Vitrohm. All products can be obtained from our Yageo sales offices, of which contact details can be found on the backcover of this catalogue. For most up-to-date information, as well as contact details of our franchise distributors, please refer to our website: **www.yageo.com**

Table of Contents

Chip Resistors General Information		8
	Specification overview	8
	Ordering information - Global part number	13
	Ordering information - North America	15
	IEC publication 63, SPQ, last digit of 12NC	16
Chip Resistors Selection Charts		17
	RC - Thick film chip resistors	17
	RC - Thick film general purpose chip resistors, 01005 to 2512	17
	RC - Thick film high ohmic chip resistors	22
	RC - Thick film high ohmic chip resistors, 0805 / 1206	22
	RE - Thick film precision grade chip resistors	24
	RE - Thick film precision grade chip resistors, 0402 to 1206	24
	RT - Thin film high precision high stability chip resistors	27
	RT - Thin film high precision high stability chip resistors, 0402 to 2512	27
	YC/TC - Thick film array / network chip resistors	31
	YC/TC - Thick film array / network chip resistors	31
	YC/TC - Arrays, convex / concave / flat	33
	YC - Networks, T-type / L-type	34
	RL - Thick film low ohmic chip resistors	35
	RL - Thick film low ohmic chip resistors, 0402 to 2512	35
	RL - Thick film low ohmic, high power chip resistors, 0402 / 1206	39
	PT - Thick film low ohmic low T. C. R. chip resistors	40
	PT - Thick film low ohmic low T. C. R. chip resistors, 0402 to 2512	40
	PT - Thick film low ohmic low T. C. R. chip resistors, wide termination	43
	PT - Thick film low ohmic low T. C. R. chip resistors, wide termination, 0815	43
	PR/PA/PF/PH/PE - Current sensors - low T. C. R. chip resistors	46
	PR/PA/PF/PH/PE - Current sensors - low T. C. R. chip resistors, 0402 to 4527	46
	PE/PF - Current sensors - low T. C. R. chip resistors, wide termination	51
	PE/PF - Current sensors - low T. C. R. chip resistors, wide termination, 0612 to 0830	51
	PS - Current sensors - low T. C. R. chip resistors, 4 termination	54
	PS - Current sensors - low T. C. R. chip resistors, 4 termination, 0306 to 1225	54
	AR - NiAu termination chip resistors	57
	AR - NiAu termination chip resistors, 0402 to 1206	57
	SR - Surge chip resistors	60
	SR - Surge chip resistors, 0402 to 2512	60
	RV - High voltage chip resistors	63
	RV - High voltage chip resistors, 0603 to 2512	63
	TR - Trimmable chip resistors	66
	TR - Trimmable chip resistors, 0402 to 1206	66
	AF - Sulfur resistant chip resistors	69
	AF - Sulfur resistant chip resistors, 0201 to 2512	69
	AF - Sulfur resistant chip resistors, Arrays	72
	AC - Automotive grade chip resistors	75
	AC - Automotive grade chip resistors, 0402 to 2512	75
	AT - RF attenuator chip resistors	78
	AT - RF attenuator chip resistors, 0404	78

Chip Resistors Engineering Design Kits		81
	Engineering design kits	81
	Engineering design books	81
MLCC General Information		84
	Specification overview	84
	Ordering information - Global part number	85
	Thickness classes and packing quantities for all series	87
MLCC Selection Charts		88
	NP0 - General purpose	88
	NP0 - General purpose 16 to 50V, 01005 to 0603	89
	NP0 - General purpose 16 to 50V, 0805 to 1812	91
	NP0 - Medium & High voltage	93
	NP0 - Medium voltage, 0402 to 0805	94
	NP0 - Medium voltage, 1206 / 1210	95
	NP0 - High voltage, 0805 to 1210	96
	NP0 - High voltage, 1808 / 1812	97
	NP0 - High frequency	98
	NP0 - High frequency, 01005 to 0805	98
	X7R - General purpose & High capacitance	100
	X7R - General purpose & High capacitance, 01005 to 0402	101
	X7R - General purpose & High capacitance, 0603 / 0805	102
	X7R - General purpose & High capacitance, 1206 to 2220	103
	X7R - Medium & High voltage	104
	X7R - Medium voltage & High voltage, 0402 to 0805	105
	X7R - Medium voltage & High voltage, 1206 / 1210	106
	X7R - Medium voltage & High voltage, 1808 / 1812	107
	X7R/ X5R - Low inductance	108
	X7R/ X5R - Low inductance, 0306 to 0612	108
	X7R - Soft termination	110
	X7R - Soft termination, 0603 / 0805	111
	X7R - Soft termination, 1206	112
	X7R - Soft termination, 1210 / 1812	113
	X5R - General purpose & High capacitance	114
	X5R - General purpose & High capacitance, 01005 to 0402	115
	X5R - General purpose & High capacitance, 0603 / 0805	116
	X5R - High capacitance & High capacitance, 1206	117
	X5R - High capacitance, 1210 / 1812	118
	Y5V - General purpose & High capacitance	119
	Y5V - General purpose & High capacitance 6.3 to 25V, 0201 / 0402	120
	Y5V - General purpose & High capacitance 6.3 to 25V, 0603 / 0805	121
	Y5V - General purpose & High capacitance 6.3 to 25V, 1206 / 1210	122
	Y5V - General purpose & High capacitance 50V, 0402 to 1206	123
	Automotive grade MLCCs	124
	NP0 - Automotive grade, 0402 to 0805	125
	NP0 - Automotive grade, 1206 / 1210	126
	X7R - Automotive grade, 0402 / 0603	127
	X7R - Automotive grade, 0805	128

Table of Contents

	X7R - Automotive grade, 1206	129
	X7R - Automotive grade, 1210	130
	Safety certification MLCCs	131
	NPO - High voltage SC type, 1808 / 1812	131
	X7R - High voltage SC type, 1808 / 1812	132
	Arrays	133
	NPO / X7R / Y5V- 4C Arrays, 0508 / 0612	133
	NPO - 4C Arrays, 0508 / 0612	135
	X7R - 4C Arrays, 0508 / 1612	136
	Y5V - 4C Arrays, 0612	137
MLCC Engineering Design Kits		138
	Sample kits for 0201 / 0402	138
	Sample kits for 0603 / 0805	139
	Sample kits for 1206	140
	Sample kits for high capacitance series	141
	High voltage sample kits for general applications	142
	Sample kits for high frequency series	143

X2Y® Product Selection Charts		146
	SMD ceramic EMI filter capacitors X2Y® series	146
	Ordering information	147

Wireless Components Selection Charts		152
	Introduction	152
	Key features of Wireless Components	153
	Product Information	154
	Antenna - 2.4 GHz	154
	Antenna - 2.4 / 5 GHz	155
	Antenna - Cellular WWAN / Short Range	156
	Antenna - GPS	157
	Antenna - GPS / Glonass / Active Antenna	159
	Antenna - Others	160
	Filters	161
	Ordering Information	164
Wireless Components Engineering Design Kits		166
	Sample Kit	166

MLV Product Selection Charts		168
	Specification for 0402	169
	Specification for 0603	170
	Specification for 0805	171
	Specification for 1206	172
	Ordering information for 0402 to 1206	173

SURFACE-MOUNT CHIP RESISTORS

Specification overview

Global part number	Series	Size	Power rating	Max. voltage	Operating Temp. range	Resistance range	Tolerance	T. C. R.
RC0100xR-07xxxxL	RC	01005	1/32W	15V	-55°C to 125°C	1Ω ≤ R ≤ 1MΩ Jumper < 50mΩ	±1% ±5%	1Ω ≤ R ≤ 10Ω -200~600 ppm/°C 10Ω ≤ R ≤ 1MΩ ±250 ppm/°C
RC0201xR-07xxxxL		0201	1/20W	25V		1Ω ≤ R ≤ 10MΩ Jumper < 50mΩ	Max./Min.: 1MΩ/10Ω ±0.5% Max.: 10MΩ ±1%,±5%	1Ω ≤ R ≤ 10Ω -100/+350 ppm/°C 10Ω < R ≤ 10MΩ ±200 ppm/°C
RC0402xR-07xxxxL		0402	1/16W	50V	-55°C to 155°C	1Ω ≤ R ≤ 22MΩ Jumper < 50mΩ	Max./Min.: 1MΩ/10Ω ±0.1% ±0.5% Max.: 10MΩ ±1% Max.: 22MΩ ±5%	1Ω ≤ R ≤ 10Ω ±200 ppm/°C 10Ω < R ≤ 10MΩ ±100 ppm/°C 10MΩ < R ≤ 22MΩ ±200 ppm/°C
RC0603xR-07xxxxL		0603	1/10W	50V				
RC0805xR-07xxxxL		0805	1/8W	150V				
RC1206xR-07xxxxL		1206	1/4W	200V				
RC1210xR-07xxxxL		1210	1/2W	200V				
RC1218xK-07xxxxL		1218	1W	200V		1Ω ≤ R ≤ 1MΩ Jumper < 50mΩ		
RC2010xK-07xxxxL		2010	3/4W	200V		1Ω ≤ R ≤ 22MΩ Jumper < 50mΩ		
RC2512xK-07xxxxL		2512	1W	200V				
RC0603xR-7WxxxxL		0603	1/5W	50V	-55°C to 155°C	1Ω ≤ R ≤ 1MΩ	±1% ±5%	±200 ppm/°C
RC0805xR-7WxxxxL		0805	1/4W	150V		1Ω ≤ R ≤ 1MΩ		
RC1206xR-7WxxxxL		1206	1/2W	200V				
RC2512xK-7WxxxxL		2512	2W	200V		1Ω ≤ R ≤ 150Ω		
RC0805xR-07xxxxL		0805	1/8W	150V		24MΩ ≤ R ≤ 100MΩ	±5%, ±10%, ±20%	±300 ppm/°C
RC1206xR-07xxxxL		1206	1/4W	200V		24MΩ ≤ R ≤ 100MΩ		
RE0402xRE07xxxxL	RE	0402	1/16W	50V	-55°C to 155°C	10Ω ≤ R ≤ 1MΩ	±0.1% ±0.5% ±1%	±50 ppm/°C
RE0603xRE07xxxxL		0603	1/10W	50V		10Ω ≤ R ≤ 1MΩ		
RE0805xRE07xxxxL		0805	1/8W	150V		10Ω ≤ R ≤ 1MΩ		
RE1206xRE07xxxxL		1206	1/4W	200V		10Ω ≤ R ≤ 1MΩ		
RT0402xRx07xxxxL	RT	0402	1/16W	50V	-55°C to 155°C	10Ω ≤ R ≤ 121KΩ	±0.05% ±0.1% ±0.25% ±0.5% ±1%	±10 ppm/°C ±15 ppm/°C ±25 ppm/°C ±50 ppm/°C
RT0603xRx07xxxxL		0603	1/10W	75V		5.1Ω ≤ R ≤ 681KΩ		
RT0805xRx07xxxxL		0805	1/8W	150V		5.1Ω ≤ R ≤ 1.5MΩ		
RT1206xRx07xxxxL		1206	1/4W	200V		5.1Ω ≤ R ≤ 1.5MΩ		
RT1210xRx07xxxxL		1210	1/4W		-55°C to 125°C	5.1Ω ≤ R ≤ 1MΩ		
RT2010xKx07xxxxL		2010	1/2W			10Ω ≤ R ≤ 1MΩ		
RT2512xKx07xxxxL		2512	3/4W			10Ω ≤ R ≤ 1MΩ		
YC102-xR-07xxxxL	YC	2*0201	1/32W	15V	-55°C to 125°C	10Ω ≤ R ≤ 1MΩ Jumper < 50mΩ	±1% ±5%	±200 ppm/°C
YC104-xR-07xxxxL		4*0201	1/32W	12.5V				
YC122-xR-07xxxxL		2*0402	1/16W	50V		1Ω ≤ R ≤ 1MΩ Jumper < 50mΩ	Max./Min.: 1MΩ/10Ω ±1% Max.: 1MΩ ±5%	
YC124-xR-07xxxxL		4*0402	1/16W	25V	-55°C to 155°C	1Ω ≤ R ≤ 1MΩ Jumper < 50mΩ	±1% ±5%	1Ω ≤ R < 10Ω ±250 ppm/°C 10Ω ≤ R ≤ 1MΩ ±200 ppm/°C
YC162-xR-07xxxxL		2*0603	1/16W	50V	-55°C to 125°C	10Ω ≤ R ≤ 1MΩ Jumper < 50mΩ	±5%	±200 ppm/°C
YC164-xR-07xxxxL		4*0603	1/16W	50V	-55°C to 155°C	1Ω ≤ R ≤ 1MΩ Jumper < 50mΩ	±1% ±5%	
YC248-xR-07xxxxL		8*0602	1/16W	50V		10Ω ≤ R ≤ 1MΩ Jumper < 50mΩ		
YC324-xK-07xxxxL		4*1206	1/8W	200V		10Ω ≤ R ≤ 1MΩ		
TC122-xR-07xxxxL	TC	2*0402	1/16W	50V	-55°C to 125°C	10Ω ≤ R ≤ 1MΩ Jumper < 50mΩ	±1% ±5%	±200 ppm/°C
! TC122HxR-07xxxxL								
! TC122MxR-07xxxxL								
TC124-xR-07xxxxL		4*0402	1/16W	50V				
! TC124HxR-07xxxxL								
! TC124MxR-07xxxxL								
TC164-xR-07xxxxL		4*0603	1/16W	50V		1Ω ≤ R ≤ 1MΩ		

Note: " ! " is the symbol for new product

Global part number	Series	Size	Power rating	Max. voltage	Operating Temp. range	Resistance range	Tolerance	T. C. R.
YC158TJR-07xxxxL	YC158	10P8R (0612)	1/16W	25V	-55°C to 155°C	10Ω ≤ R ≤ 100KΩ	±5%	±200 ppm/°C
YC358xJK-07xxxxL	YC358	10P8R (1225)	1/16W	50V		10Ω ≤ R ≤ 330KΩ		±200 ppm/°C
RL0402xR-07xxxxL	RL	0402	1/16W	(PxR)^1/2	-55°C to 125°C	50mΩ ≤ R < 1Ω Jumper < 20mΩ	±1% ±2% ±5%	See page 36, table “T. C. R. - RL series“
RL0603xR-07xxxxL		0603	1/10W			10mΩ ≤ R < 1Ω Jumper < 20mΩ		
RL0805xR-07xxxxL		0805	1/8W					
RL1206xR-07xxxxL		1206	1/4W					
RL1210xR-07xxxxL		1210	1/2W			10mΩ ≤ R < 1Ω		
RL1218xK-07xxxxL		1218	1W					
RL2010xK-07xxxxL		2010	3/4W					
RL2512xK-07xxxxL		2512	1W					
RL0805xR-7WxxxxL		0805	1/4W			10mΩ ≤ R < 1Ω		
RL1206xR-7WxxxxL		1206	1/2W					
PT0402xR-07xxxxL	PT	0402	1/16W	(PxR)^1/2	-55°C to 155°C	50mΩ ≤ R < 1Ω Jumper < 10mΩ	±1% ±2% ±5%	See page 41, table "T.C.R. - PT series"
PT0603xR-07xxxxL		0603	1/10W			50mΩ ≤ R < 1Ω Jumper < 8mΩ		
PT0805xR-07xxxxL		0805	1/8W			50mΩ ≤ R < 1Ω Jumper < 5mΩ		
PT1206xR-07xxxxL		1206	1/4W					
PT2010xK-07xxxxL		2010	3/4W			100mΩ ≤ R < 1Ω		
PT2512xK-07xxxxL		2512	1W					
PT0402xR-7WxxxxL		0402	1/8W			50mΩ ≤ R < 1Ω		
PT0603xR-7WxxxxL		0603	1/5W					
PT0805xR-7WxxxxL		0805	1/4W					
PT1206xR-7WxxxxL		1206	1/2W					
PT2010xK-7WxxxxL		2010	1W			100mΩ ≤ R < 1Ω		
PT2512xK-7WxxxxL		2512	2W					
PT0402xR-7TxxxxL		0402	1/6W			68mΩ		
PT0603xR-7TxxxxL		0603	1/3W			50mΩ ≤ R ≤ 68mΩ		
PT0815xK-07xxxxL	PT (Wide)	0815	1/2W	(PxR)^1/2	-55°C to 155°C	25mΩ ≤ R ≤ 50mΩ	±1% ±2% ±5%	±100 ppm/°C
PT0815xK-7WxxxxL			1W					

Note: “ ! “ is the symbol for new product

Specification overview

Global part number	Series	Size	Power rating	Max. voltage	Operating Temp. range	Resistance range	Toler-ance	T. C. R.
PR1206xKx07xxxxxx	PR	1206	1/4W	(PxR)^1/2	-55°C to 170°C	1mΩ ≤ R ≤ 6mΩ	±1% ±2% ±5%	±50 ppm/°C
PR1206xKx7Wxxxxxx			1/2W					
PR1206xKx47xxxxxx			1W					
PR2010xKx07xxxxxx		2010	1/2W			1mΩ ≤ R < 100mΩ		
PR2010xKx7Wxxxxxx			1W					
PR2512xKx07xxxxxx		2512	1W			0.5mΩ ≤ R ≤ 5mΩ	±1% ±2% ±5%	0.5mΩ ≤ R ≤ 2mΩ ±200 ppm/°C 3mΩ ≤ R ≤ 5mΩ ±100 ppm/°C
PR2512xKx7Wxxxxxx			2W					
PR2512xKx7Txxxxxx			3W			0.5mΩ ≤ R ≤ 10mΩ		±50 ppm/°C
PR2512DKx07xxxxxx			1W			7mΩ ≤ R ≤ 75mΩ	±0.5%	
PR2512DKx7Wxxxxxx			2W					
PA2512xKF07xxxxL	PA	2512	1W	(PxR)^1/2	-55°C to 155°C	1mΩ ≤ R ≤ 10mΩ	±1% ±5%	±100 ppm/°C
PA2512xKF7WxxxxL			2W					
PA2512xKF7TxxxxL			3W					
! PF0402xRx07xxxxxx	PF	0402	1/16W	(PxR)^1/2	-55°C to 155°C	10mΩ ≤ R ≤ 50mΩ	±1% ±2% ±5%	±100 ppm/°C
! PF0402xRx7Wxxxxxx			1/8W					
! PF0402xRx47xxxxxx			1/4W					
PF0603xRx07xxxxxx		0603	1/10W		-55°C to 170°C	5mΩ ≤ R ≤ 100mΩ		±50 ppm/°C ±75 ppm/°C ±100 ppm/°C
PF0603xRx7Wxxxxxx			1/5W					
PF0603xRx7Txxxxxx			1/3W					
PF0603xRx47xxxxxx			2/5W					
PF0603xRx57xxxxxx			1/2W					
PF0805xRx07xxxxxx		0805	1/8W			3mΩ ≤ R ≤ 100mΩ		
PF0805xRx7Wxxxxxx			1/4W					
PF0805xRx7Txxxxxx			1/3W					
PF0805xRx47xxxxxx			1/2W					
PF1206xxx07xxxxxx		1206	1/4W			3mΩ ≤ R ≤ 100mΩ		
PF1206xxx7Wxxxxxx			1/2W					
PF1206xxx47xxxxxx			1W					
PF2010xKx07xxxxxx		2010	1/2W			5mΩ ≤ R ≤ 100mΩ		
PF2010xKx7Wxxxxxx			1W					
PF2512xKx07xxxxxx		2512	1W			6mΩ ≤ R ≤ 100mΩ		
PF2512xKx7Wxxxxxx			2W					
PF2512xKx7Txxxxxx			3W					
PF4527xKx07xxxxxx		4527	2W			5mΩ ≤ R ≤ 1Ω		
PF4527xKx7Wxxxxxx			3W					
PF4527xKx7Txxxxxx			5W					
PF4527xKx7Wxxxxxx		4527	3W			5mΩ ≤ R ≤ 1Ω	±1% ±2% ±5%	±50 ppm/°C ±75 ppm/°C ±100 ppm/°C
PF4527xKx7Txxxxxx			5W					
PF0612xKx07xxxxxx	PF (Wide)	0612	1W	(PxR)^1/2	-55°C to 170°C	1mΩ ≤ R ≤ 300mΩ	±1% ±2% ±5%	±75 ppm/°C ±100 ppm/°C
PF0612xKx7Wxxxxxx			2W					
PF0815xKx07xxxxxx		0815	1/2W			1mΩ ≤ R ≤ 100mΩ		
PF0815xKx7Wxxxxxx			1W					
PF0830xKx07xxxxxx		0830	2W			1mΩ ≤ R ≤ 100mΩ		
PF0830xKx7Wxxxxxx			3W					

Global part number	Series	Size	Power rating	Max. voltage	Operating Temp. range	Resistance range	Toler-ance	T. C. R.
! PE0612xKx07xxxxxx	PE (Wide)	0612	1W	(PxR)^1/2	-55°C to 170°C	1mΩ ≤ R ≤ 300mΩ	±1% ±2% ±5%	±75 ppm/°C ±100 ppm/°C
! PE0612xKx7Wxxxxxx			2W					
! PE0815xKx07xxxxxx		0815	1/2W			1mΩ ≤ R ≤ 100mΩ		
! PE0815xKx7Wxxxxxx			1W					
! PE0830xKx07xxxxxx		0830	2W			1mΩ ≤ R ≤ 100mΩ		
! PE0830xKx7Wxxxxxx			3W					
PH0805xRx07xxxxxx	PH	0805	4/5W	(PxR)^1/2	-55°C to 155°C	4mΩ ≤ R ≤ 50mΩ	±1% ±2% ±5%	±75 ppm/°C
PH1206xRx07xxxxxx		1206	1W					
! PE0402xRx07xxxxxx	PE	0402	1/16W	(PxR)^1/2	-55°C to 155°C	10mΩ ≤ R ≤ 50mΩ	±1% ±2% ±5%	±100 ppm/°C
! PE0402xRx7Wxxxxxx			1/8W					
! PE0402xRx47xxxxxx			1/4W					
PE0603xRx07xxxxxx		0603	1/10W		-55°C to 170°C	5mΩ ≤ R ≤ 100mΩ		±50 ppm/°C ±75 ppm/°C ±100 ppm/°C
PE0603xRx7Wxxxxxx			1/5W					
PE0603xRx7Txxxxxx			1/3W					
PE0603xRx47xxxxxx			2/5W					
PE0603xRx57xxxxxx			1/2W					
PE0805xRx07xxxxxx		0805	1/8W			3mΩ ≤ R ≤ 100mΩ		
PE0805xRx7Wxxxxxx			1/4W					
PE0805xRx7Txxxxxx			1/3W					
PE0805xRx47xxxxxx			1/2W					
PE1206xxx07xxxxxx		1206	1/4W			3mΩ ≤ R ≤ 100mΩ		
PE1206xxx7Wxxxxxx			1/2W					
PE1206xxx47xxxxxx			1W					
! PE2010xKx07xxxxxx		2010	1/2W			5mΩ ≤ R ≤ 100mΩ		
! PE2010xKx7Wxxxxxx			1W					
! PE2512xKx07xxxxxx		2512	1W			6mΩ ≤ R ≤ 100mΩ		
PE2512xKx7Wxxxxxx			2W					
! PE2512xKx7Txxxxxx			3W					
! PE4527xKx07xxxxxx		4527	2W			5mΩ ≤ R < 1Ω		
! PE4527xKx7Wxxxxxx			3W					
! PE4527xKx7Txxxxxx			5W					
! PS0306xRx07xxxxxx	PS (4 Terminal)	0306	1/8W	(PxR)^1/2	-55°C to 155°C	10mΩ ≤ R ≤ 50mΩ	±1% ±5%	±75 ppm/°C ±100 ppm/°C
! PS0306xRx7Wxxxxxx			1/4W					
! PS0508xRx07xxxxxx		0508	1/8W		-55°C to 170°C			
! PS0508xRx7Wxxxxxx			1/4W					
! PS0508xRx7Txxxxxx			1/2W					
! PS0612xKx07xxxxxx		0612	1W			0.5mΩ, 0.75mΩ 1mΩ ≤ R ≤ 5mΩ		0.5mΩ, 0.75mΩ ±700 ppm/°C 1mΩ ≤ R ≤ 2mΩ ±400 ppm/°C 3mΩ ≤ R ≤ 5mΩ ±150 ppm/°C
! PS1225xKx07xxxxxx		1225	3W			4mΩ ≤ R ≤ 50mΩ		±75 ppm/°C ±100 ppm/°C

Note: " ! " is the symbol for new product

Specification overview

Global part number	Series	Size	Power rating	Max. voltage	Operating Temp. range	Resistance range	Tolerance	T. C. R.
AR0402xR-07xxxxL	AR	0402	1/16W	50V	-55°C to 155°C	1Ω ≤ R ≤ 10MΩ Jumper < 50mΩ	±1% ±5%	1Ω ≤ R ≤ 10Ω ±200 ppm/°C 10Ω < R ≤ 10MΩ ±100 ppm/°C
AR0603xR-07xxxxL		0603	1/10W	50V				
AR0805xR-07xxxxL		0805	1/8W	150V				
AR1206xR-07xxxxL		1206	1/4W	200V				
! SR0402xR-07xxxxL	SR	0402	1/16W	50V	-55°C to 155°C	1Ω ≤ R ≤ 100KΩ	±5% ±10% ±20%	±200 ppm/°C
! SR0402xR-7WxxxxL			1/8W					
! SR0603xR-07xxxxL		0603	1/10W	50V				
! SR0603xR-7WxxxxL			1/5W					
SR0805xR-07xxxxL		0805	1/8W	150V				
! SR0805xR-7WxxxxL			1/4W					
SR1206xR-07xxxxL		1206	1/4W	200V				
! SR1206xR-7WxxxxL			1/2W					
SR1218xK-07xxxxL		1218	1W	200V				
SR2010xK-07xxxxL		2010	3/4W	200V				
SR2512xK-07xxxxL		2512	1W	200V				
! RV0603xR-07xxxxL	RV	0603	1/10W	350V	-55°C to 155°C	10KΩ ≤ R ≤ 1MΩ	±1% ±5%	±200 ppm/°C
RV0805xR-07xxxxL		0805	1/8W	400V		100KΩ ≤ R ≤ 10MΩ		
RV1206xR-07xxxxL		1206	1/4W	500V		100KΩ ≤ R ≤ 27MΩ	Max.: 10MΩ ±1% Max.: 27MΩ ±5%	
RV2512JK-07xxxxL		2512	1W			4.7MΩ ≤ R ≤ 16MΩ	±5%	
TR0402xR-07xxxxL	TR	0402	1/16W	50V	-55°C to 125°C	1Ω ≤ R ≤ 10MΩ	+0/-10% +0/-20% +0/-30%	1Ω ≤ R ≤ 10Ω ±200 ppm/°C 10Ω < R ≤ 1MΩ ±100 ppm/°C 1MΩ < R ≤ 10MΩ ±200 ppm/°C
TR0603xR-07xxxxL		0603	1/16W					
TR0805xR-07xxxxL		0805	1/8W	150V	-55°C to 155°C			
TR1206xR-07xxxxL		1206	1/4W	200V				
! AF0201xR-07xxxxL		0201	1/20W	25V	-55°C to 125°C	1Ω ≤ R ≤ 10MΩ Jumper<50mΩ	±1% ±5%	1Ω ≤ R ≤ 10Ω -100/+350 ppm/°C 10Ω < R ≤ 10MΩ ±200 ppm/°C
AF0402xRx-07xxxxL		0402	1/16W	50V	-55°C to 155°C	1Ω ≤ R ≤ 22MΩ Jumper<50mΩ	Max:10MΩ ±1% Max:22MΩ ±5%	1Ω ≤ R ≤ 10Ω ±200 ppm/°C 10Ω < R ≤ 10MΩ ±100 ppm/°C 10MΩ < R ≤ 22MΩ ±200 ppm/°C
AF0603xRx-07xxxxL		0603	1/10W	50V				
AF0805xRx-07xxxxL		0805	1/8W	150V				
AF1206xRx-07xxxxL		1206	1/4W	200V				
! AF1210xRx-07xxxxL		1210	1/2W	200V		1Ω ≤ R ≤ 10MΩ Jumper<50mΩ	±1% ±5%	1Ω ≤ R ≤ 10Ω ±200 ppm/°C 10Ω < R ≤ 10MΩ ±100 ppm/°C
! AF1218xKx-07xxxxL		1218	1W	200V				
! AF2010xKx-07xxxxL		2010	3/4W	200V				
! AF2512xKx-07xxxxL		2512	1W	200V				
! AF122-xR-07xxxxL		2*0402	1/16W	50V	-55°C to 125°C	1Ω ≤ R ≤ 1MΩ Jumper < 50mΩ	±1% ±5%	1Ω ≤ R ≤ 10Ω ±250 ppm/°C 10Ω < R ≤ 1MΩ ±200 ppm/°C
! AF124-xR-07xxxxL		4*0402	1/16W	25V	-55°C to 155°C			
AC0402xR-07xxxxL	AC	0402	1/16W	50V	-55°C to 155°C	1Ω ≤ R ≤ 10MΩ Jumper < 50mΩ	±1% ±5%	1Ω ≤ R ≤ 10Ω ±200 ppm/°C 10Ω < R ≤ 10MΩ ±100 ppm/°C
AC0603xR-07xxxxL		0603	1/10W	50V				
AC0805xR-07xxxxL		0805	1/8W	150V				
AC1206xR-07xxxxL		1206	1/4W	200V				
AC1210xR-07xxxxL		1210	1/2W	200V				
AC1218xK-07xxxxL		1218	1W	200V		1Ω ≤ R ≤ 1MΩ Jumper < 50mΩ		
AC2010xK-07xxxxL		2010	3/4W	200V		1Ω ≤ R ≤ 10MΩ Jumper < 50mΩ		
AC2512xK-07xxxxL		2512	1W	200V				
ATV321xR-07xxxxL	AT	0404	40mW	50V	-55°C to 125°C	-1dB to -20dB	±0.3dB ±0.5dB ±1.0dB ±2.0dB	---

Note: " ! " is the symbol for new product

Global part number - Single resistor [3]

R C 0 4 0 2 J R — 7 D 1 0 R L

Series name (code 1-2)
- RC = Thick film general purpose
- RE = Thick film precision grade
- RT = Thin film high precision high stability
- RL = Thick film low ohmic
- PT = Thick film low ohmic low T. C. R.
- PR/PA/PF/PH/PE = Current sensor - low T. C. R.
- PS = Current sensor - low T.C.R, 4 termination
- TR = Trimmable
- SR = Surge
- AR = NiAu termination
- RV = High voltage
- AF = Sulfur resistant
- AC = Automotive grade

Size code (code 3-6)
(inch / metric)
- 0100 = 0.4 x 0.2
- 0201 = 0.6 x 0.3
- 0402 = 1.0 x 0.5
- 0603 = 1.6 x 0.8
- 0612 = 1.6 x 3.2
- 0805 = 2.0 x 1.25
- 0815 = 2.15 x 3.75
- 0830 = 2.0 x 7.5
- 1206 = 3.2 x 1.6
- 1210 = 3.2 x 2.6
- 1218 = 3.2 x 4.5
- 2010 = 5.0 x 2.5
- 2512 = 6.35 x 3.2
- 4527 = 11.0 x 7.0

Tolerance (code 7)
- W = ±0.05%
- B = ±0.1%
- C = ±0.25%
- D = ±0.5%
- F = ±1%
- G = ±2%
- J = ±5% (for RC/AR/AF/AC Jumper ordering)
- K = ±10% (for TR = 0/-10%)
- M = ±20% (for TR = 0/-20%)
- N = ±30% (for TR = 0/-30%)
- "—" for RL/PT Jumper ordering

Default code [1/2] (code 17)

Resistance (code 12-16)
- 0R = Jumper
- 0U5 = 0.0005Ω
- 0R1 = 0.1Ω
- 1R = 1Ω
- 10R = 10Ω
- 100R = 100Ω
- 1K = 1 000Ω
- 1M = 1 000 000Ω
- 100M = 100 000 000Ω

Taping reel (code 10-11)
- 07 = 7 inch Dia. reel
- 10 = 10 inch Dia. reel
- 13 = 13 inch Dia. reel
- 7D = 7 inch Dia. reel 2 x standard quantity

T. C. R. (code 9)
- B = ±10 ppm/°C (on request)
- C = ±15 ppm/°C (on request)
- D = ±25 ppm/°C
- E = ±50 ppm/°C
- M = ±75 ppm/°C
- F = ±100 ppm/°C
- L = ± 150 ppm/°C
- G = ±200 ppm/°C
- P = ± 400 ppm/°C
- Q = ± 700 ppm/°C
- "—" = Based on spec.
- (— for thick film only)

Packing style (code 8)
- R = Paper tape reel
- K = Embossed plastic tape reel
- C = Bulk cassette
- S = ESD safe reel

Note: 1. All of our RSMD products are RoHS compliant. "LFP" of the internal 2D reel label mentions "Lead Free Process"
2. Letter L is system default code for ordering only
3. Global Part Number is the preferred clear text code for ordering Yageo and Phycomp branded products.

Ordering information - Global part number

Global part number - Power enhancement

RL 0805 J R — 7W 0R015 L

Series name (code 1-2)
- RC = Thick film general purpose
- RL = Thick film low ohmic
- PT = Thick film low ohmic low T. C. R.
- PR/PA/PF/PE = Current sensor - low T. C. R.
- PS = Current sensor - low T.C.R, 4 termination

Size code (code 3-6)
(inch / metric)
- 0306 = 0.8 x 1.6
- 0508 = 1.25 x 2.0
- 0612 = 1.6 x 3.2
- 0805 = 2.0 x 1.25
- 0815 = 2.15 x 3.75
- 1206 = 3.2 x 1.6
- 1225 = 3.2 x 6.35
- 2010 = 5.0 x 2.5
- 2512 = 6.35 x 3.2
- 4527 = 11.0 x 7.0

Tolerance (code 7)
- F = ±1%
- G = ±2%
- J = ±5%

Packing style (code 8)
- R = Paper tape reel
- K = Embossed plastic tape reel

Default code (code 17)
- L / Z = Default code

Resistance (code 12-16)
- 0U5 = 0.0005Ω
- 0R01 = 0.01Ω
- 0R1 = 0.1Ω

Taping reel (code 10-11)
- 07 = 7 inch Dia. reel
- 7W = 7 inch Dia. reel
  2 x standard power type
- 7T = 7 inch Dia. reel
  3 x standard power type
- 47 = 7 inch Dia. reel
  4 x standard power type
- 57 = 7 inch Dia. reel
  5 x standard power type

T. C. R. (code 9)
- E = ±50 ppm/°C
- M = ±75 ppm/°C
- F = ±100 ppm/°C
- G = ±200 ppm/°C
- "—" = Based on spec.
- (— for thick film only)

Global part number - Arrays & Networks

YC 16 4 — J R — 07 10R L

Series name (code 1-2)
- YC = Array & Network
  (convex / flat) thick film
- TC = Array (concave) thick film
- AF = Sulfur resistant array (Convex) thick film

Size code (inch) (code 3-4)
- 10 = 0201 x 2 (0202)
  0201 x 4 (0204)
- 12 = 0402 x 2 (0404)
  0402 x 4 (0408)
- 15 = 10Pin/8R (0612)
- 16 = 0603 x 2 (0606)
  0603 x 4 (0612)
- 24 = 0602 x 8 (0616)
- 32 = 1206 x 4 (1224)
- 35 = 10Pin/8R (1225)

Number of resistors (code 5)
- 2 = 2 resistors
- 4 = 4 resistors
- 8 = 8 resistors

Schematic (code 6)
- L = L-type (for YC358)
- T = T-type (for YC158/358)
- M = Reverse type
- H = Reverse & Half type
- "—" = Based on spec.

Default code (code 17)

Resistance (code 12-16)
- 0R = Jumper
- 0R1 = 0.1Ω
- 1R = 1Ω
- 10R = 10Ω
- 100R = 100Ω
- 1K = 1 000Ω
- 1M = 100 000 000

Taping reel (code 10-11)
- 07 = 7 inch Dia. reel
- 10 = 10 inch Dia. reel
- 13 = 13 inch Dia. reel

T.C.R. (code 9)
- "—" = Based on spec.

Packing style (code 8)
- R = Paper tape reel
- K = Embossed plastic tape reel

Tolerance (code 7)
- F = ±1%
- J = ±5% (for Jumper ordering)

Phycomp CTC ordering code - North America

Ordering example: 9C06031A10R0FKHFT = R-Chip 0603, 10R0, 1%, 5K reel

1-2	3-6	7-8	9-12	13	14	15-16	17
X X	X X X X	X X	X X X X	X	X	X X	X

Series name (code 1-2)
- 9C = Phycomp thick film chip resistors
- 9T = Phycomp thin film chip resistors

Size code (standard resistors, code 3-6)

0201	0201 (0603)
0402	0402 (1005)
0603	0603 (1608)
0805	0805 (2012)
1206	1206 (3216)
1210	1210 (3225)
1218	1218 (3248)
2010	2010 (5025)
2512	2512 (6432)
AC34	0603 (1608) 4R concave array
AV34	0603 (1608) 4R convex array
AV22	0402 (1005) 2R convex array
AV24	0402 (1005) 4R convex array
AV28	0402 (1005) 8R convex array
RN31	10P8R in 1206 convex network
FR01	1206 (3216) Fusible
FR21	0603 (1608) Fusible
SR01	1206 (3216) Surge
VR01	1206 (3216) High voltage 5%
VR02	1206 (3216) High voltage 1%
VR11	0805 (2012) High voltage 5%
VR12	0805 (2012) High voltage 1%
VR21	2512 (6432) High voltage 5%
MR22	2512 (6432) Current sensor - low T. C. R.
MF22	2512 (6432) Current sensor - low T. C. R.
V321	0404 (1010) RF attenuator

Power rating (code 7-8)

1A	1/16W	0.063W	(0402)
1A	1/10W	0.10W	(0603)
2A	1/8W	0.125W	(0805)
3A	1/4W	0.25W	(1206)
5A	1/2W	0.5W	(1210)
7A	1/20W	0.05W	(0201)
8A	1/32W	0.03125W	(RN31)
12	3/4W	0.75W	(2010)
1W	1W	1W	(1218/2512)
2W	2W	2W	

Resistance value (code 9-12)
- 0R00 = Jumper
- R0XX < 0.1Ω
- RXXX = 0.1Ω - 0.976Ω
- XRXX = 1Ω - 9.76Ω
- XXRX = 10Ω - 97.6Ω
- XXX0 = 100Ω - 976Ω
- XXX1 = 1K - 9.76K
- XXX2 = 10K - 97.6K
- XXX3 = 100K - 9.78K
- XXX4 = 1M - 9.76M
- XXX5 = 10M - 97.6M
- XXX6 = 100M+
- XXDB = 1 - 20DB

Tolerance (code 13)
- E = ±0.01%
- A = ±0.05%
- B = ±0.1%; 0.2dB
- C = ±0.25%; 0.3dB
- D = ±0.5%; 0.5dB
- F = ±1%; 1dB
- G = ±2%; 2dB
- J = ±5%
- N = 0/-20%
- R = 0/-30%

dB values apply to attenuators

Right values apply to trimmable resistors

T. C. R. (code 14)
- C = ±10 ppm/°C
- D = ±15 ppm/°C
- A = ±25 ppm/°C
- B = ±50 ppm/°C
- K = ±100 ppm/°C
- L = ±200 ppm/°C
- E = ±250 ppm/°C
- M = ±300 ppm/°C
- G = ±500 ppm/°C
- F = 0/+500 ppm/°C
- R = ±600 ppm/°C
- Q = -100/+600 ppm/°C
- P = ±750 ppm/°C
- H = ±1000 ppm/°C
- I = ±1500 ppm/°C
- J = ±2000 ppm/°C
- N = ±3000 ppm/°C

Special coding (code 15-16)
- HF = SnPb
- PF = Lead-free
- AF = NiAu

Packing style (code 17)
- T = 5K paper
- 3 = 10K paper
- 4 = 20K paper
- 5 = 4K blister
- 6 = 5K blister
- 7 = 50K paper
- P = 25K bulk case

IEC publication 63, SPQ, last digit of 12NC

Standard of values in a decade according to “IEC publication 63”												
E24 series	10	11	12	13	15	16	18	20	22	24	27	30
	33	36	39	43	47	51	56	62	68	75	82	91
E96 series	100	102	105	107	110	113	115	118	121	124	127	130
	133	137	140	143	147	150	154	158	162	165	169	174
	178	182	187	191	196	200	205	210	215	221	226	232
	237	243	249	255	261	267	274	280	287	294	301	309
	316	324	332	340	348	357	365	374	383	392	402	412
	422	432	442	453	464	475	487	499	511	523	536	549
	562	576	590	604	619	634	649	665	681	698	715	732
	750	768	787	806	825	845	866	887	909	931	953	976

Packing quantities								
Size code	Tape width	178mm / Ø7” reel		254mm / Ø10" reel	330mm / Ø13" reel		Weight	Volume
		Paper	Embossed	Paper	Paper	Embossed	g /100pcs	mm^3
0100	8mm	20 000	---	---	---	---	0.007	0.0104
0201	8mm	10 000 / 20 000	---	---	50 000	---	0.016	0.041
0402	8mm	10 000 / 20 000	---	20 000	50 000	---	0.058	0.175
0603	8mm	5 000	---	10 000	20 000	---	0.192	0.576
0612	8mm	---	5 000	---	---	---	0.862	2.728
0805	8mm	4 000 / 5 000	---	10 000	20 000	---	0.450	1.250
0815	8mm	---	4 000	---	---	---	1.71	4.44
0830	12mm	---	4 000	---	---	---	4.594	5.55
1206	8mm	4 000 / 5 000	4 000	10 000	20 000	---	0.862	2.728
1210	8mm	5 000	---	10 000	20 000	---	1.471	4.030
1218	12mm	---	4 000	---	---	---	2.703	7.590
2010	12mm	---	4 000 / 2 000	---	---	16 000	2.273	6.875
2512	12mm	---	4 000	---	---	---	3.704	10.827
4527	24mm	---	1 000	---	---	---	16.225	48.3
YC102	8mm	10 000	---	---	---	---	0.052	---
YC104	8mm	10 000	---	---	---	---	0.099	---
AF/YC122	8mm	10 000	---	---	50 000	---	0.100	---
TC122	8mm	10 000	---	---	50 000	---	0.112	---
ATV321	8mm	10 000	--	---	---	---	0.100	---
AF/YC124	8mm	10 000	---	20 000	40 000	---	0.281	---
TC124	8mm	10 000	---	20 000	40 000	---	0.311	---
YC162	8mm	5 000	---	--	---	---	0.376	---
YC164	8mm	5 000	---	10 000	20 000	---	0.833	---
TC164	8mm	5 000	---	10 000	20 000	---	1.030	---
YC158	8mm	5 000	---	---	20 000	---	0.855	---
YC248	12mm	5 000	4 000	---	---	---	0.885	---
YC324	12mm	---	4 000	---	---	---	2.703	---
YC358	12mm	---	4 000	---	---	---	3.333	---

12NC Ordering information

The first 8 or 9 digits of the 12 digit catalogue number are given under section “Phycomp worldwide - Traditional type” on following pages.
The remaining 4 or 3 digits represent the resistance value with the last digit indicating the multiplier as shown in table on the right.

Example:

0.001 Ω = 0010 or 010
0.02 Ω = 0200 or 200
0.3 Ω = 3007 or 307
1 Ω = 1008 or 108
33 kΩ = 3303 or 333
10 MΩ = 1006 or 106

Last digit of 12NC	
Resistance	Last digit
0.001 to 0.0976 Ω	0
0.1 to 0.976 Ω	7
1 to 9.76 Ω	8
10 to 97.6 Ω	9
100 to 976 Ω	1
1 to 9.76 kΩ	2
10 to 97.6 kΩ	3
100 to 976 kΩ	4
1 to 9.76 MΩ	5
10 to 97.6 MΩ	6

RC - Thick film general purpose chip resistors, 01005 to 2512

Features

- Extremely thin and light
- Highly reliable multilayer electrode construction
- Compatible with all soldering processes
- Highly stable in auto-placement surface mounting applications
- Barrier layer end termination
- Jumper is available
- Available in 8mm tape & reel per IEC 60286-3 (EIA -RS 481)

Derating curve

Maximum dissipation (P) in percentage of rated power as a function of the operating ambient temperature (T_{amb}).

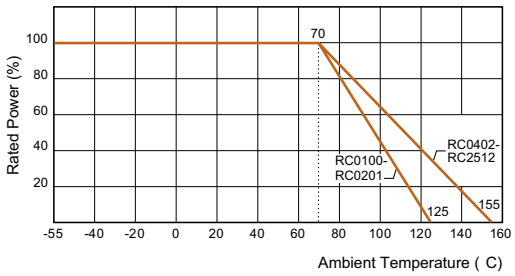

Construction

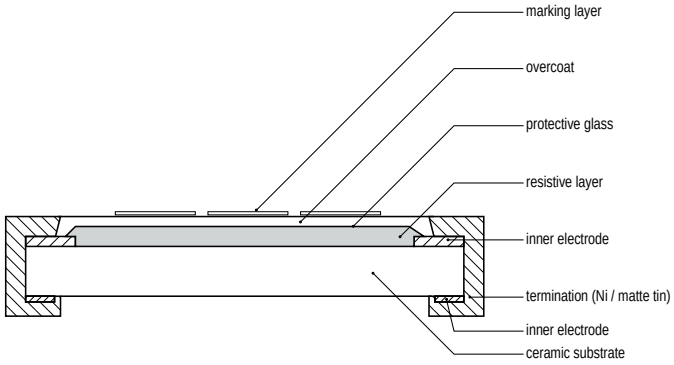

Dimensions

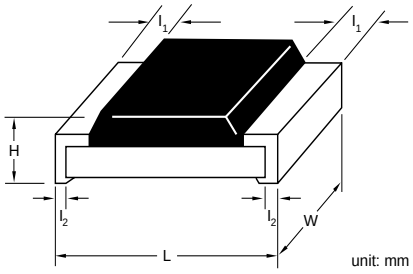

Type	L	W	H	l_1	l_2
RC01005	0.40 ±0.02	0.20 ±0.02	0.13 ±0.02	0.10 ±0.03	0.10 ±0.03
RC0201	0.60 ±0.03	0.30 ±0.03	0.23 ±0.03	0.10 ±0.05	0.15 ±0.05
RC0402	1.00 ±0.05	0.50 ±0.05	0.35 ±0.05	0.20 ±0.10	0.25 ±0.10
RC0603	1.60 ±0.10	0.80 ±0.10	0.45 ±0.10	0.25 ±0.15	0.25 ±0.15
RC0805	2.00 ±0.10	1.25 ±0.10	0.50 ±0.10	0.35 ±0.20	0.35 ±0.20
RC1206	3.10 ±0.10	1.60 ±0.10	0.55 ±0.10	0.45 ±0.20	0.40 ±0.20
RC1210	3.10 ±0.10	2.60 ±0.15	0.50 ±0.10	0.45 ±0.15	0.50 ±0.20
RC1218	3.10 ±0.10	4.60 ±0.10	0.55 ±0.10	0.45 ±0.20	0.40 ±0.20
RC2010	5.00 ±0.10	2.50 ±0.15	0.55 ±0.10	0.45 ±0.15	0.50 ±0.20
RC2512 (1W)	6.35 ±0.10	3.10 ±0.15	0.55 ±0.10	0.60 ±0.20	0.50 ±0.20
RC2512 (2W)	6.35 ±0.10	3.10 ±0.15	0.55 ±0.10	0.60 ±0.20	1.15 ±0.20

RC - Thick film general purpose chip resistors, 01005 to 2512

Electrical characteristics								
Type	Power P_{70}	Operating Temp. range	MWV	RCOV	DWV	Resistance range & tolerance	T. C. R. (ppm/°C)	Jumper criteria (unit: A)
RC01005	1/32W	-55°C to +125°C	15V	30V	30V	E24 ±1%, 5% 1Ω≤R≤1MΩ Jumper <50mΩ	1Ω≤R≤10Ω -200~600 10Ω≤R≤1MΩ ±250	Rated current 0.5 Max. current 1.0
RC0201	1/20W	-55°C to +125°C	25V	50V	50V	E24 ±5% 1Ω≤R≤10MΩ E24/E96 ±1% 1Ω≤R≤10MΩ E24/E96 ±0.1%,±0.5% 10Ω≤R≤1MΩ Jumper <50mΩ	10Ω<R≤10MΩ ±200 1Ω≤R≤10Ω -100/+350	Rated current 0.5 Max. current 1.0
RC0402	1/16W	-55°C to +125°C	50V	100V	100V	E24 ±5% 1Ω≤R≤22MΩ E24/E96 ±1% 1Ω≤R≤10MΩ E24/E96 ±0.1%,±0.5% 10Ω≤R≤1MΩ Jumper <50mΩ	1Ω≤R≤10Ω ±200 10Ω<R≤10MΩ ±100 10MΩ<R≤22MΩ ±200	Rated current 1.0 Max. current 2.0
RC0603	1/10W	-55°C to +125°C	50V	100V	100V	E24 ±5% 1Ω≤R≤22MΩ E24/E96 ±1% 1Ω≤R≤10MΩ E24/E96 ±0.1%,±0.5% 10Ω≤R≤1MΩ Jumper <50mΩ	1Ω≤R≤10Ω ±200 10Ω<R≤10MΩ ±100 10MΩ<R≤22MΩ ±200	Rated current 1.0 Max. current 2.0
	1/5W	-55°C to +125°C	50V	100V	100V	E24 ±5% 1Ω≤R≤1MΩ E24/E96 ±1% 1Ω≤R≤1MΩ	1Ω≤R≤1MΩ ±200	-- --
RC0805	1/8W	-55°C to +155°C	150V	300V	300V	E24 ±5% 1Ω≤R≤22MΩ E24/E96 ±1% 1Ω≤R≤10MΩ E24/E96 ±0.1%,±0.5% 10Ω≤R≤1MΩ Jumper <50mΩ	1Ω≤R≤10Ω ±200 10Ω<R≤10MΩ ±100 10MΩ<R≤22MΩ ±200	Rated current 2.0 Max. current 5.0
	1/4W	-55°C to +155°C	150V	300V	300V	E24 ±5% 1Ω≤R≤1MΩ E24/E96 ±1% 1Ω≤R≤1MΩ	1Ω≤R≤1MΩ ±200	-- --
RC1206	1/4W	-55°C to +155°C	200V	400V	500V	E24 ±5% 10Ω≤R≤22MΩ E24/E96 ±1% 1Ω≤R≤10MΩ E24/E96 ±0.1%,±0.5% 10Ω≤R≤1MΩ Jumper <50mΩ	1Ω≤R≤10Ω ±200 10Ω<R≤10MΩ ±100 10MΩ<R≤22MΩ ±200	Rated current 2.0 Max. current 10.0
	1/2W	-55°C to +155°C	200V	400V	500V	E24 ±5% 1Ω≤R≤1MΩ E24/E96 ±1% 1Ω≤R≤1MΩ	1Ω≤R≤1MΩ ±200	-- --
RC1210	1/2W	-55°C to +155°C	200V	500V	500V	E24 ±5% 1Ω≤R≤22MΩ E24/E96 ±1% 1Ω≤R≤10MΩ E24/E96 ±0.5% 10Ω≤R≤1MΩ Jumper <50mΩ	1Ω≤R≤10Ω ±200 10Ω<R≤10MΩ ±100 10MΩ<R≤22MΩ ±200	Rated current 2.0 Max. current 10.0
RC1218	1W	-55°C to +155°C	200V	500V	500V	E24 ±5% 1Ω≤R≤1MΩ E24/E96 ±1% 1Ω≤R≤1MΩ E24/E96 ±0.1%,±0.5% 10Ω≤R≤1MΩ Jumper <20mΩ		Rated current 6.0 Max. current 10.0
RC2010	3/4W	-55°C to +155°C	200V	500V	500V	E24 ±5% 1Ω≤R≤22MΩ E24/E96 ±1% 1Ω≤R≤10MΩ E24/E96 ±0.1%,±0.5% 10Ω≤R≤1MΩ Jumper <50mΩ		Rated current 2.0 Max. current 10.0
RC2512	1W	-55°C to +155°C	200V	500V	500V			Rated current 2.0 Max. current 10.0
	2W	-55°C to +155°C	200V	400V	500V	E24 ±5% 1Ω≤R≤150Ω E24/E96 ±1% 1Ω≤R≤150Ω	1Ω≤R≤150Ω ±200	-- --

Environmental characteristics				
Performance test		Test method	Procedure	Requirements
Life		MIL-STD-202G-method 108A	1 000 hours at 70 ±5°C applied RCWV 1.5 hours on, 0.5 hours off, still air required	01005: ±(3% +0.05Ω) < 100mΩ for jumper Others: ±(1% +0.05Ω) for 1% tol. ±(3% +0.05Ω) for 5% tol. < 100mΩ for jumper
High temperature exposure		MIL-STD-202G-method 108A	1 000 hours at maximum operating temperature depending on specification, unpowered	01005: ±(1% +0.05Ω) < 50mΩ for jumper Others: ±(1% +0.05Ω) for 1% tol. ±(2% +0.05Ω) for 5% tol. < 50mΩ for jumper
Moisture resistance		MIL-STD-202G-method 106F	Each temperature / humidity cycle is defined as 8 hours (method 106F), 3 cycles / 24 hours for 10d with 25°C / 65°C 95% R.H	01005: ±(2.0% +0.05Ω) < 100mΩ for jumper Others: ±(0.5% +0.05Ω) for 1% tol. ±(2% +0.05Ω) for 5% tol. < 100mΩ for jumper
Thermal shock		MIL-STD-202G-method 107G	LCT / UCT, number of cycles required is 300 Maximum transfer time is 20 seconds	01005: ±(1% +0.05Ω) < 50mΩ for jumper Others: ±(0.5% +0.05Ω) for 1% tol. ±(1% +0.05Ω) for 5% tol. < 50mΩ for jumper
Solderability	Wetting	J-STD-002B testB	Electrical test not required. Magnification 50X Lead-free solder bath at 245 ±3°C Dipping time: 3 ±0.5 seconds	Well tinned (≥95% covered) No visible damage
	Resistance to soldering heat	MIL-STD-202G-method 210F	Lead-free solder, 260°C, 10 seconds immersion time	01005: ±(1% +0.05Ω) < 50mΩ for jumper Others: ±(0.5% +0.05Ω) for 1% tol. ±(1% +0.05 Ω) for 5% tol. < 50mΩ for jumper No visible damage
Short time overload		MIL-R-55342D-para 4.7.5	2.5 times RCWV or maximum overload voltage whichever is less for 5 seconds at room temperature	01005: ±(2% +0.05Ω) < 50mΩ for jumper Others: ±(1% +0.05Ω) for 1% tol. ±(2% +0.05Ω) for 5% tol. < 50mΩ for jumper No visible damage

RC - Thick film general purpose chip resistors, 01005 to 2512

Global part number - Preferred type for ordering Yageo / Phycomp branded products

Ordering example: RC0402JR-07100KL

RC 0402 J R — 07 100K L

Series name (code 1-2)
RC = General purpose thick film

Size code (code 3-6)
(inch / metric)
0100 = 0.4 x 0.2
0201 = 0.6 x 0.3
0402 = 1.0 x 0.5
0603 = 1.6 x 0.8
0805 = 2.0 x 1.25
1206 = 3.2 x 1.6
1210 = 3.2 x 2.6
1218 = 3.2 x 4.5
2010 = 5.0 x 2.5
2512 = 6.35 x 3.2

Tolerance (code 7)
B = ±0.1%
D = ±0.5%
F = ±1%
J = ±5% (for Jumper ordering)

Default code(1/2) (code 17)

Resistance (code 12-16)
0R = Jumper
10R = 10Ω
100R = 100Ω
100K = 100KΩ

Taping reel (code 10-11)
07 = 7 inch Dia. reel
10 = 10 inch Dia. reel
13 = 13 inch Dia. reel
7D = 7 inch Dia. reel, 2 x standard quantity
7W = 7 inch Dia. reel, 2 x standard power

T. C. R. (code 9)
"—" = Based on spec.
(— for thick film only)

Packing style (code 8)
R = Paper tape reel
K = Embossed plastic tape reel
C = Bulk cassette
S = ESD safe reel

Note: 1. All of our RSMD products are RoHS compliant. "LFP" of the internal 2D reel label mentions "Lead Free Process"
2. Letter L is system default code for ordering only

RC - Thick film general purpose chip resistors, 01005 to 2512

Phycomp worldwide - Traditional type									
General purpose thick film / RC series									
Size: inch (mm)		**0201 (0603)**		**0402 (1005)**		**0603 (1608)**		**0805 (2012)**	
Power		1/20 W		1/16 W		1/10 W		1/8 W	
Tolerance		+5%	+1%	+5%	+1%	+5%	+1%	+5%	+1%
Resistance		E24	E24 / E96	E24	E24 / E96	E24	E24 / E96	E24	E24 / E96
Packing		paper tape		paper tape		paper tape		paper tape	
Quantity	5 000	---	---	---	---	2322 702 60...L	2322 704 6....L	2322 730 61...L	2322 734 6....L
	10 000	2322 803 70...L	2322 806 7....L	2322 705 70...L	2322 706 7....L	2322 702 70...L	2322 704 7....L	2322 730 71...L	2322 734 7....L
	20 000	2322 806 80...L	2322 806 8....L	---	---	2322 702 81...L	2322 704 8....L	2322 730 81...L	2322 734 8....L
	50 000	2322 803 60...L	2322 806 6....L	2322 705 87...L	2322 706 8....L	---	---	---	---
Jumper	5 000	---	---	---	---	2322 702 96001L	---	2322 730 91002L	---
	10 000	2322 803 91001L	---	2322 705 91001L	---	2322 702 97001L	---	2322 730 91003L	---
	20 000	---	---	---	---	2322 702 92002L	---	2322 730 92002L	---
	50 000	---	---	2322 705 91007L	---	---	---	---	---

For ordering rules: See page 14 for E24 / E96 values and the last 4 or 3 digits of the 12NC catalogue number

Phycomp worldwide - Traditional type											
General purpose thick film / RC series											
Size: inch (mm)		**1206 (3216)**		**1210 (3225)**		**1218 (3248)**		**2010 (5025)**		**2512 (6432)**	
Power		1/4 W		1/2 W		1 W		3/4 W		1 W	
Tolerance		+5%	+1%	+5%	+1%	+5%	+1%	+5%	+1%	+5%	+1%
Resistance		E24	E24 / E96	E24	E24 / E96	E24	E24 / E96	E24	E24 / E96	E24	E24 / E96
Packing		paper tape		paper tape		blister tape		blister tape		blister tape	
Quantity	4 000	---	---	---	---	2322 735 64...L	2322 735 7....L	2322 760 60...L	2322 761 6....L	2322 762 60...L	2322 763 6....L
	5 000	2322 711 61...L	2322 724 6....L	2390 735 70...L	2390 735 3....L	---	---	---	---	---	---
	10 000	2322 711 51...L	2322 724 7....L	---	---	---	---	---	---	---	---
	20 000	2322 711 81...L	2322 724 8....L	2390 735 71...L	2390 735 5....L	---	---	---	---	---	---
Jumper	4 000	---	---	---	---	2322 735 90007L	---	2322 760 90003L	---	2322 762 90000L	---
	5 000	2322 711 91032L	---	2390 735 90001L	---	---	---	---	---	---	---
	10 000	2322 711 91005L	---	---	---	---	---	---	---	---	---
	20 000	2322 711 92004L	---	---	---	---	---	---	---	---	---

For ordering rules: See page 14 for E24 / E96 values and the last 4 or 3 digits of the 12NC catalogue number

Phycomp CTC ordering code - Traditional type - North America
Regional code for ordering Phycomp branded products. Please see page 15 for details.

RC - Thick film high ohmic chip resistors, 0805 / 1206

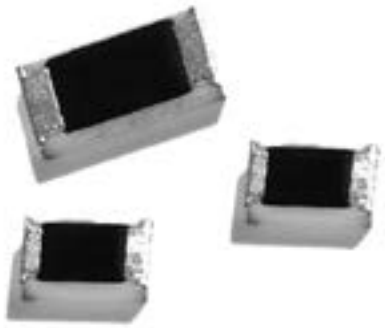

Features

- Reduced size of final equipment
- Low assembly costs
- Higher component and equipment reliability
- High ohmic values up to 100MΩ
- Suitable for power supplies in small equipment

Derating curve

Maximum dissipation (P) in percentage of rated power as a function of the operating ambient temperature (T_{amb}).

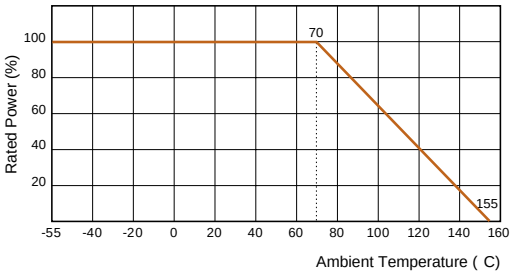

Construction

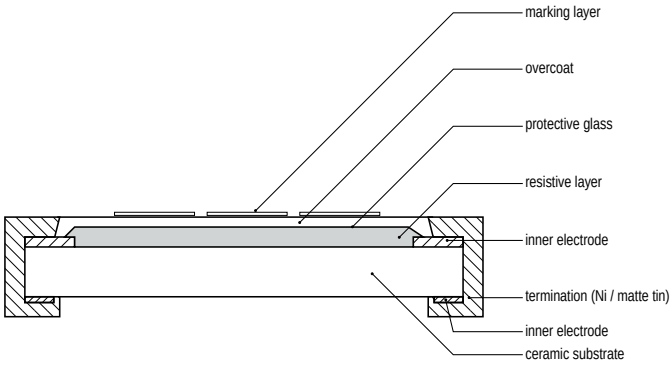

Dimensions

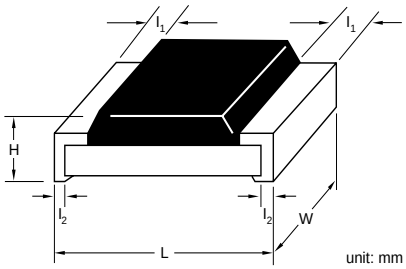

Type	L	W	H	l_1	l_2
RC0805	2.00 ±0.10	1.25 ±0.10	0.50 ±0.10	0.35 ±0.20	0.35 ±0.20
RC1206	3.10 ±0.10	1.60 ±0.10	0.55 ±0.10	0.45 ±0.20	0.40 ±0.20

Electrical characteristics							
Type	Power P_{70}	Operating Temp. range	MWV	RCOV	DWV	Resistance range & tolerance	T. C. R.
RC0805	1/8W	-55°C to +155°C	150V	300V	300V	E24 ±5%, ±10%, ±20% 24MΩ ≤ R ≤ 100MΩ	±300 ppm/°C
RC1206	1/4W	-55°C to +155°C	200V	400V	500V		

Note: See page 11 for ordering code. For more detailed, please contact our sales offices, distributors and representatives in your region.

Environmental characteristics				
Performance test		Test method	Procedure	Requirements
Life		MIL-STD-202G-method 108A	1 000 hours at 70 ±5°C applied RCWV 1.5 hours on, 0.5 hours off, still air required	±(2% +0.05Ω)
High temperature exposure		MIL-STD-202G-method 108A	1 000 hours at maximum operating temperature depending on specification, unpowered	±(1% +0.05Ω)
Moisture resistance		MIL-STD-202G-method 106F	Each temperature / humidity cycle is defined as 8 hours (method 106F), 3 cycles / 24 hours for 10d with 25°C / 65°C 95% R.H	±(2% +0.05Ω)
Thermal shock		MIL-STD-202G-method 107G	LCT / UCT, number of cycles required is 300 Maximum transfer time is 20 seconds	±(1% +0.05Ω)
Solderability	Wetting	J-STD-002B testB	Electrical test not required. Magnification 50X Lead-free solder bath at 245 ±3°C Dipping time: 3 ±0.5 seconds	Well tinned (≥95% covered) No visible damage
	Resistance to soldering heat	MIL-STD-202G-method 210F	Lead-free solder, 260°C, 10 seconds immersion time	±(1% +0.05Ω) No visible damage
Short time overload		MIL-R-55342D-para 4.7.5	2.5 times RCWV or maximum overload voltage whichever is less for 5 seconds at room temperature	±(2% +0.05Ω) No visible damage

RE - Thick film precision grade chip resistors, 0402 to 1206

Features

- Narrow tolerance
- Low T. C. R.
- Highly reliable multilayer electrode construction
- Compatible with all soldering processes
- Suitable for auto-placement surface mounting applications
- Available in 8mm tape & reel per EIA RS481

Derating curve

Maximum dissipation (P) in percentage of rated power as a function of the operating ambient temperature (T_{amb}).

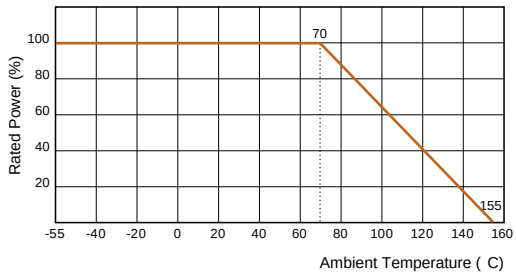

Construction

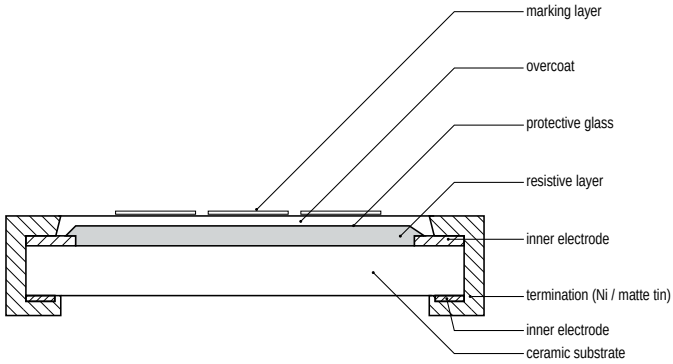

Dimensions

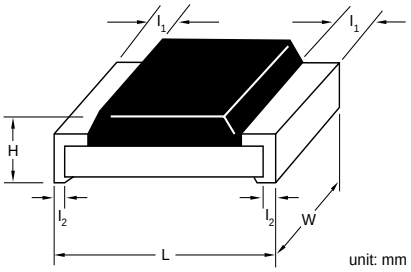

Type	L	W	H	l_1	l_2
RE0402	1.00 ±0.05	0.50 ±0.05	0.32 ±0.05	0.20 ±0.10	0.25 ±0.10
RE0603	1.60 ±0.10	0.80 ±0.10	0.45 ±0.10	0.25 ±0.15	0.25 ±0.15
RE0805	2.00 ±0.10	1.25 ±0.10	0.50 ±0.10	0.35 ±0.20	0.35 ±0.20
RE1206	3.10 ±0.10	1.60 ±0.10	0.55 ±0.10	0.45 ±0.20	0.40 ±0.20

RE - Thick film precision grade chip resistors, 0402 to 1206

Electrical characteristics							
Type	Power P_{70}	Operating Temp. range	MWV	RCOV	DWV	Resistance range & tolerance	T. C. R.
RE0402	1/16W	-55°C to +155°C	50V	100V	100V	E24/E96 ±0.1%,±0.5%, ±1% 10Ω ≤ R ≤ 1MΩ	±50 ppm/°C
RE0603	1/10W	-55°C to +155°C	50V	100V	100V		
RE0805	1/8W	-55°C to +155°C	150V	300V	300V		
RE1206	1/4W	-55°C to +155°C	200V	400V	500V		

Environmental characteristics				
Performance test		Test method	Procedure	Requirements
Life		MIL-STD-202G-method 108A	1 000 hours at 70 ±5°C applied RCWV 1.5 hours on, 0.5 hours off, still air required	±(3% +0.05Ω)
High temperature exposure		MIL-STD-202G-method 108A	1 000 hours at maximum operating temperature depending on specification, unpowered	±(3% +0.05Ω)
Moisture resistance		MIL-STD-202G-method 106F	Each temperature / humidity cycle is defined as 8 hours (method 106F), 3 cycles / 24 hours for 10d with 25°C / 65°C 95% R.H	±(3% +0.05Ω)
Thermal shock		MIL-STD-202G-method 107G	LCT / UCT, number of cycles required is 300 Maximum transfer time is 20 seconds	±(1% +0.05Ω)
Solderability	Wetting	IPC/JEDECJ-STD-002B testB	Electrical test not required. Magnification 50X Lead-free solder bath at 245 ±3°C Dipping time: 3 ±0.5 seconds	Well tinned (≥95% covered) No visible damage
	Resistance to soldering heat	MIL-STD-202G-method 210F	Lead-free solder, 260°C, 10 seconds immersion time	±(0.5%+ 0.05Ω) No visible damage
Short time overload		MIL-R-55342D-para 4.7.5	2.5 times RCWV or maximum overload voltage whichever is less for 5 seconds at room temperature	±(1%+ 0.05Ω) No visible damage

RE - Thick film precision grade chip resistors, 0402 to 1206

Global part number - Preferred type for ordering Yageo / Phycomp branded products

Ordering example: RE0603DRE07100KL

RE 0603 D R E 07 100K L

Series name (code 1-2)
RE = Thick film precision grade

Size code (code 3-6)
(inch / metric)
0402 = 1.0 x 0.5
0603 = 1.6 x 0.8
0805 = 2.0 x 1.25
1206 = 3.2 x 1.6

Tolerance (code 7)
B = ±0.1%
D = ±0.5%
F = ±1%

Default code(1/2) (code 17)

Resistance (code 12-16)
10R = 10Ω
100R = 100Ω
100K = 100KΩ

Taping reel (code 10-11)
07 = 7 inch Dia. reel
10 = 10 inch Dia. reel
13 = 13 inch Dia. reel

T. C. R. (code 9)
E = ±50 ppm/°C

Packing style (code 8)
R = Paper tape reel

Note: 1. All of our RSMD products are RoHS compliant. "LFP" of the internal 2D reel label mentions "Lead Free Process"
2. Letter L is system default code for ordering only
3. RE series products are available by "Global part number" only

Phycomp CTC ordering code - Traditional type - North America

Regional code for ordering Phycomp branded products. Please see page 15 for details.

RT - Thin film high precision high stability chip resistors, 0402 to 2512

Features

- High precision - High stability
- Low T. C. R. / low noise
- High accuracy (±0.05%, ±0.1%, ±0.25%, ±0.5%, ±1%)

Derating curve

Maximum dissipation (P) in percentage of rated power as a function of the operating ambient temperature (T_{amb}).

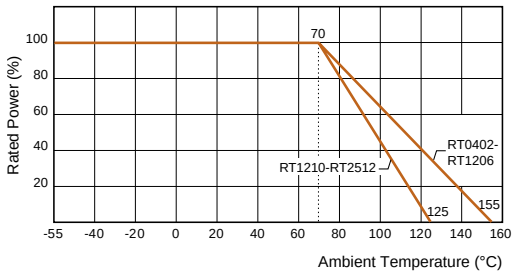

Construction

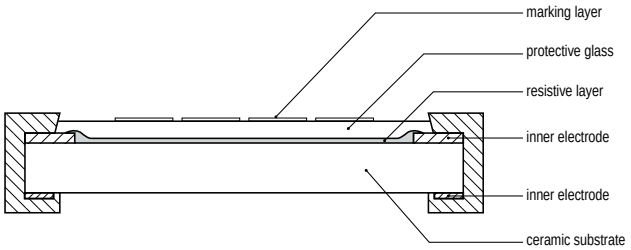

Dimensions

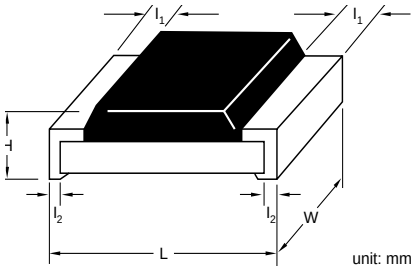

Type	L	W	H	I_1	I_2
RT0402	1.00 ±0.10	0.50 ±0.05	0.30 ±0.05	0.20 ±0.10	0.25 ±0.10
RT0603	1.60 ±0.10	0.80 ±0.10	0.45 ±0.10	0.25 ±0.15	0.25 ±0.15
RT0805	2.00 ±0.10	1.25 ±0.10	0.50 ±0.10	0.35 ±0.20	0.35 ±0.20
RT1206	3.10 ±0.10	1.60 ±0.10	0.55 ±0.10	0.45 ±0.20	0.40 ±0.20
RT1210	3.10 ±0.10	2.60 ±0.15	0.55 ±0.10	0.50 ±0.20	0.50 ±0.20
RT2010	5.00 ±0.10	2.50 ±0.15	0.55 ±0.10	0.60 ±0.20	0.50 ±0.20
RT2512	6.35 ±0.10	3.20 ±0.15	0.55 ±0.10	0.60 ±0.20	0.50 ±0.20

RT - Thin film high precision high stability chip resistors, 0402 to 2512

Electrical characteristics								
Type	Power P_{70}	Operating Temp. range	MWV	RCOV	DWV	Resistance range & tolerance		T. C. R.
RT0402	1/16W	-55°C to +155°C	50V	100V	75V	E24/E96 ±0.05%, ±0.1%, ±0.25%, ±0.5%, ±1%	10Ω ≤ R ≤ 121KΩ	±50 ppm/°C ±25 ppm/°C ±15 ppm/°C ±10 ppm/°C
RT0603	1/10W		75V	150V	100V		5.1Ω ≤ R ≤ 681KΩ	
RT0805	1/8W		150V	300V	200V		5.1Ω ≤ R ≤ 1.5MΩ	
RT1206	1/4W		200V	400V	300V			
RT1210	1/4W	-55°C to +125°C	200V	400V	400V		5.1Ω ≤ R ≤ 1MΩ	
RT2010	1/2W		200V	400V	400V		10Ω ≤ R ≤ 1MΩ	
RT2512	3/4W		200V	400V	400V			

Environmental characteristics				
Performance test		Test method	Procedure	Requirements
Life		MIL-STD-202G-method 108A	1 000 hours at 70 ±5°C applied RCWV 1.5 hours on, 0.5 hours off, still air required	±(0.5%+ 0.05Ω) for RT
High temperature exposure		MIL-STD-202G-method 108A	1 000 hours at maximum operating temperature depending on specification, unpowered	±(0.5%+ 0.05Ω)
Moisture resistance		MIL-STD-202G-method 106F	Each temperature / humidity cycle is defined as 8 hours (method 106F), 3 cycles / 24 hours for 10d with 25°C / 65°C 95% R.H	±(0.5%+ 0.05Ω)
Thermal shock		MIL-STD-202G-method 107G	LCT / UCT, number of cycles required is 300 Maximum transfer time is 20 seconds	±(0.5%+ 0.05Ω)
Short time overload		MIL-R-55342D-para 4.7.5	2.5 times RCWV or maximum overload voltage which-ever is less for 5 seconds at room temperature	±(0.5%+ 0.05Ω) for RT No visible damage
Solderability	Resistance to soldering heat	MIL-STD-202G-method 210F	Lead-free solder, 260°C, 10 seconds immersion time	±(0.5% +0.05Ω) No visible damage
	Wetting	J-STD-002B testB	Electrical test not required. Magnification 50X Lead-free solder bath at 245 ±3°C Dipping time: 3 ±0.5 seconds	Well tinned (≥95% covered) No visible damage

RT - Thin film high precision high stability chip resistors, 0402 to 2512

Global part number - Preferred type for ordering Yageo / Phycomp branded products

Ordering example: RT0603DRE07100KL

RT 0603 D R E 07 100K L

Series name (code 1-2)
RT = High precision - High stability thin film

Size code (code 3-6)
(inch / metric)
0402 = 1.0 x 0.5
0603 = 1.6 x 0.8
0805 = 2.0 x 1.25
1206 = 3.2 x 1.6
1210 = 3.2 x 2.6
2010 = 5.0 x 2.5
2512 = 6.35 x 3.2

Tolerance (code 7)
W = ±0.05%
B = ±0.1%
C = ±0.25%
D = ±0.5%
F = ±1%

Default code (1/2) (code 17)

Resistance (code 12-16)
10R = 10Ω
100R = 100Ω
10K = 10KΩ
100K = 100KΩ

Taping reel (code 10-11)
07 = 7 inch Dia. reel
10 = 10 inch Dia. reel
13 = 13 inch Dia. reel

T. C. R. (code 9)
B = ±10 ppm/°C (on request)
C = ±15 ppm/°C (on request)
D = ±25 ppm/°C
E = ±50 ppm/°C

Packing style (code 8)
R = Paper tape reel
K = Embossed plastic tape reel

Note: 1. All of our RSMD products are RoHS compliant. "LFP" of the internal 2D reel label mentions "Lead Free Process"
2. Letter L is system default code for ordering only

RT - Thin film high precision high stability chip resistors, 0402 to 2512

Phycomp worldwide - Traditional type									
High precision - High stability									
Size: inch (mm)		0402 (1005)				0603 (1608)			
Power		1/16 W				1/10 W			
Tolerance		±1%	±0.5%	±0.25%	±0.1%	±1%	±0.5%	±0.25%	±0.1%
Resistance		E24 / E96				E24 / E96			
Packing		paper tape				paper tape			
Quantity	TC25 5 000	---	---	---	---	2390 604 7....L	2390 604 6....L	2390 604 5....L	2390 604 4....L
	TC50 5 000	---	---	---	---	2390 404 7....L	2390 404 6....L	2390 404 5....L	2390 404 4....L
	TC25 10 000	2390 607 7....L	2390 607 6....L	2390 607 5....L	2390 607 4....L	---	---	---	---
	TC50 10 000	2390 407 7....L	2390 407 6....L	2390 407 5....L	2390 407 4....L	---	---	---	---

For ordering rules: See page 14 for E24 / E96 values and the last 4 or 3 digits of the 12NC catalogue number

Phycomp worldwide - Traditional type															
High precision - High stability															
Size: inch (mm)		0805 (2012)				1206 (3216)				1210 (3225)			
Power		1/8 W				1/4 W				1/2 W			
Tolerance		±1%	±0.5%	±0.25%	±0.1%	±1%	±0.5%	±0.25%	±0.1%	±1%	±0.5%	±0.25%	±0.1%
Resistance		E24 / E96				E24 / E96				E24 / E96			
Packing		paper tape				paper tape				paper tape			
Quantity	TC10 5 000	2390 801 7....L	2390 801 6....L	2390 801 5....L	2390 801 4....L	2390 811 7....L	2390 811 6....L	2390 811 5....L	2390 811 4....L	2390 812 7....L	2390 812 6....L	2390 812 5....L	2390 812 4....L
	TC15 5 000	2390 701 7....L	2390 701 6....L	2390 701 5....L	2390 701 4....L	2390 711 7....L	2390 711 6....L	2390 711 5....L	2390 711 4....L	2390 712 7....L	2390 712 6....L	2390 712 5....L	2390 712 4....L
	TC25 5 000	2390 601 7....L	2390 601 6....L	2390 601 5....L	2390 601 4....L	2390 611 7....L	2390 611 6....L	2390 611 5....L	2390 611 4....L	2390 612 7....L	2390 612 6....L	2390 612 5....L	2390 612 4....L
	TC50 5 000	2390 401 7....L	2390 401 6....L	2390 401 5....L	2390 401 4....L	2390 411 7....L	2390 411 6....L	2390 411 5....L	2390 411 4....L	2390 412 7....L	2390 412 6....L	2390 412 5....L	2390 412 4....L

For ordering rules: See page 14 for E24 / E96 values and the last 4 or 3 digits of the 12NC catalogue number

Phycomp worldwide - Traditional type									
High precision - High stability									
Size: inch (mm)		2010 (5025)				2512 (6432)			
Power		1/2 W				3/4 W			
Tolerance		±1%	±0.5%	±0.25%	±0.1%	±1%	±0.5%	±0.25%	±0.1%
Resistance		E24 / E96				E24 / E96			
Packing		blister tape				blister tape			
Quantity	TC10 4 000	2390 815 7....L	2390 815 6....L	2390 815 5....L	2390 815 4....L	2390 818 7....L	2390 818 6....L	2390 818 5....L	2390 818 4....L
	TC15 4 000	2390 731 7....L	2390 731 6....L	2390 731 5....L	2390 731 4....L	2390 735 7....L	2390 735 6....L	2390 735 5....L	2390 735 4....L
	TC25 4 000	2390 615 7....L	2390 615 6....L	2390 615 5....L	2390 615 4....L	2390 618 7....L	2390 618 6....L	2390 618 5....L	2390 618 4....L
	TC50 4 000	2390 415 7....L	2390 415 6....L	2390 415 5....L	2390 415 4....L	2390 418 7....L	2390 418 6....L	2390 418 5....L	2390 418 4....L

For ordering rules: See page 14 for E24 / E96 values and the last 4 or 3 digits of the 12NC catalogue number

Phycomp CTC ordering code - Traditional type - North America
Regional code for ordering Phycomp branded products. Please see page 13 for details.

Thin film product range against tolerance / T. C. R. (ordering code)														
Tolerance	±0.05% (W)			±0.1% (B)				±0.25% (C)				±0.5% (D)		±1% (F)
T. C. R. (ppm/°C)	±10 (B)	±15 (C)	±25 (D)	±10 (B)	±15 (C)	±25 (D)	±50 (E)	±10 (B)	±15 (C)	±25 (D)	±50 (E)	±25 (D)	±50 (E)	±50 (E)
RT0402	--	--	--	10R - 100K	10R - 100K	10R - 121K	10R - 121K	10R - 100K	10R - 100K	10R - 121K	10R - 121K	10R - 121K	10R - 121K	10R - 121K
RT0603	1K - 47K	1K - 47K	1K - 47K	10R - 100K	10R - 100K	10R - 681K	10R - 681K	10R - 100K	10R - 100K	10R - 681K	5R1 - 681K	10R - 681K	5R1 - 681K	5R1 - 681K
RT0805	100R - 100K	100R - 100K	100R - 100K	10R - 100K	10R - 100K	10R - 1.5M	10R - 1.5M	10R - 100K	10R - 100K	10R - 1.5M	5R1 - 1.5M	10R - 1.5M	5R1 - 1.5M	5R1 - 1.5M
RT1206	100R - 100K	100R - 100K	100R - 100K	10R - 100K	10R - 100K	10R - 1.5M	10R - 1.5M	10R - 100K	10R - 100K	10R - 1.5M	5R1 - 1.5M	10R - 1.5M	5R1 - 1.5M	5R1 - 1.5M
RT1210	100R - 100K	100R - 100K	100R - 100K	10R - 100K	10R - 100K	10R - 1M	10R - 1M	10R - 100K	10R - 100K	10R - 1M	5R1 - 1M	10R - 1M	5R1 - 1M	5R1 - 1M
RT2010	100R - 100K	100R - 100K	100R - 100K	10R - 100K	10R - 100K	10R - 1M	10R - 1M	10R - 100K	10R - 100K	10R - 1M	10R - 1M	10R - 1M	10R - 1M	10R - 1M
RT2512	100R - 100K	100R - 100K	100R - 100K	10R - 100K	10R - 100K	10R - 1M	10R - 1M	10R - 100K	10R - 100K	10R - 1M	10R - 1M	10R - 1M	10R - 1M	10R - 1M

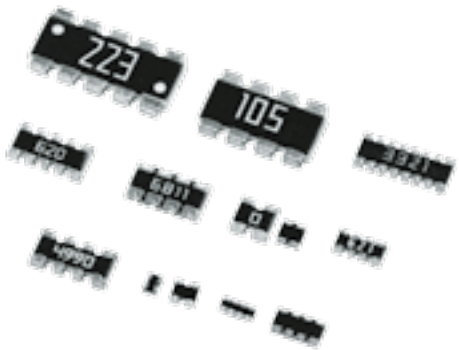

Features

- Integrated discrete chip resistors from 2 to 8 pcs
- More efficient in pick & place application
- Low assembly costs
- Reduced size of final equipment
- Higher component and equipment reliability

Schematics

YC102/122/162

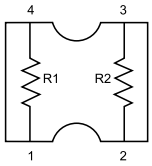

R1 = R2

YC104/124/164/324[1]

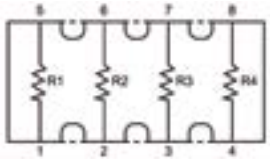

R1 = R2 = R3 = R4

YC248

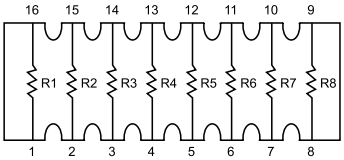

R1 = R2 = R3 = R4 = R5 = R6 = R7 = R8

YC358 (L-Type)

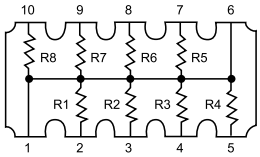

R1 = R2 = R3 = R4 = R5 = R6 = R7 = R8

TC122

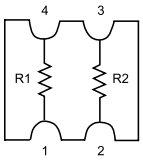

R1 = R2

TC124/164

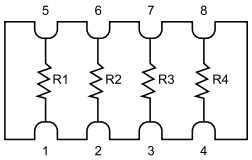

R1 = R2 = R3 = R4

YC158

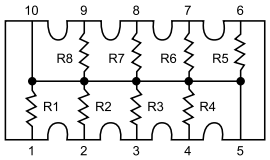

R1 = R2 = R3 = R4 = R5 = R6 = R7 = R8

YC358 (T-Type)

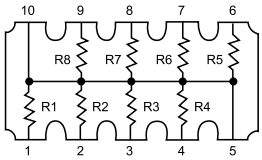

R1 = R2 = R3 = R4 = R5 = R6 = R7 = R8

Dimensions

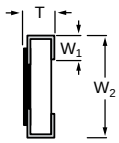

Side view for all types

YC 102/122/162

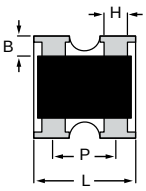

YC 104/124/164/324 158/358/248[1]

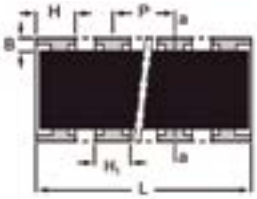

TC 122

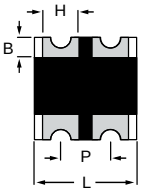

TC 124/164

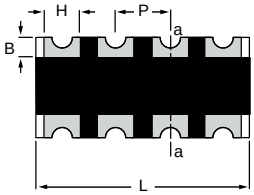

unit: mm

Note: 1. YC104 is flat type

Type	H / H_1	B	P	L	T	W_1	W_2
YC102	H: 0.35 ±0.10	0.20 ±0.10	0.50 ±0.05	0.80 ±0.10	0.35 ±0.10	0.15 ±0.10	0.60 ±0.10
YC104	H: 0.20 ±0.10	0.15 ±0.05	0.40 (Typical)	1.40 ±0.10	0.35 ±0.10	0.15 ±0.10	0.60 ±0.10
YC122	H: 0.21 +0.10/-0.05	0.20 ±0.10	0.67 ±0.05	1.00 ±0.10	0.30 ±0.10	0.25 ±0.10	1.00 ±0.10
YC124	H: 0.45 ±0.05 H_1: 0.30 ±0.05	0.20 ±0.15	0.50 ±0.05	2.00 ±0.10	0.45 ±0.10	0.30 ±0.15	1.00 ±0.10
YC162	H: 0.30 ±0.10	0.30 ±0.10	0.80 ±0.05	1.60 ±0.10	0.40 ±0.10	0.30 ±0.10	1.60 ±0.10
YC164	H: 0.65 ±0.05 H_1: 0.50 ±0.15	0.30 ±0.15	0.80 ±0.05	3.20 ±0.15	0.60 ±0.10	0.30 ±0.15	1.60 ±0.15
YC248	H: 0.45 ±0.05 H_1: 0.30 ±0.05	0.30 ±0.15	0.50 ±0.05	4.00 ±0.20	0.45 ±0.10	0.40 ±0.15	1.60 ±0.15
YC324	H: 1.10 ±0.15 H_1: 0.90 ±0.15	0.50 ±0.20	1.27 ±0.05	5.08 ±0.20	0.60 ±0.10	0.50 ±0.15	3.20 ±0.20
TC122	H: 0.30 ±0.05	0.25 ±0.15	0.50 ±0.05	1.00 ±0.10	0.30 ±0.10	0.25 ±0.15	1.00 ±0.10
TC122H	H : 0.40 ±0.05	0.25 ±0.15	0.50 ±0.05	1.00 ±0.10	0.30 ±0.10	--	1.00 ±0.10
TC122M	H : 0.30 ±0.05	0.25 ±0.15	0.50 ±0.05	1.00 ±0.10	0.30 ±0.10	0.25 ±0.15	1.00 ±0.10
TC124	H: 0.30 ±0.10	0.20 ±0.10	0.50 ±0.05	2.00 ±0.10	0.40 ±0.10	0.25 ±0.10	1.00 ±0.10
TC124H	H : 0.30 ±0.05	0.20 ±0.10	0.50 ±0.05	2.00 ±0.10	0.40 ±0.10	--	1.00 ±0.10
TC124M	H : 0.30 ±0.05	0.20 ±0.10	0.50 ±0.05	2.00 ±0.10	0.40 ±0.10	0.25 ±0.10	1.00 ±0.10
TC164	H: 0.60 ±0.15	0.30 ±0.15	0.80 ±0.05	3.20 ±0.15	0.60 ±0.10	0.30 ±0.15	1.60 ±0.15
YC158	H: 0.45±0.05 H1: 0.32±0.05	0.30 ±0.15	0.64 ±0.05	3.20 ±0.20	0.60 ±0.10	0.35 ±0.15	1.60 ±0.15
YC358	H: 1.10 ±0.15 H_1: 0.90 ±0.15	0.50 ±0.15	1.27 ±0.05	6.40 ±0.20	0.60 ±0.10	0.50 ±0.15	3.20 ±0.20

YC/TC - Thick film array / network chip resistors

Electrical characteristics								
Type	Power P_{70}	Operating Temp. range	MWV	RCOV	DWV	Resistance range & tolerance	T. C. R.	Jumper criteria (unit: A)
YC102	1/32W	-55°C to +125°C	15V	30V	30V	E24 ±5% 10Ω ≤ R ≤ 1MΩ E24/E96 ±1% 10Ω ≤ R ≤ 1MΩ Jumper < 0.05Ω	±200 ppm/°C	Rated current 0.5 Max. current 1.0
YC104	1/32W	-55°C to +125°C	12.5V	25V	25V	E24 ±5% 10Ω ≤ R ≤ 1MΩ E24/E96 ±1% 10Ω ≤ R ≤ 1MΩ Jumper < 0.05Ω		Rated current 0.5 Max. current 1.0
YC122	1/16W	-55°C to +125°C	50V	100V	100V	E24 ±5% 1Ω ≤ R ≤ 1MΩ E24/E96 ±1% 10Ω ≤ R ≤ 1MΩ Jumper < 0.05Ω		Rated current 0.5 Max. current 1.0
YC124	1/16W	-55°C to +155°C	25V	50V	100V	E24 ±5% 1Ω ≤ R ≤ 1MΩ E24/E96 ±1% 1Ω ≤ R ≤ 1MΩ Jumper < 0.05Ω	1Ω ≤ R ≤ 10Ω ±250 ppm/°C 10Ω ≤ R ≤ 1MΩ ±200 ppm/°C	Rated current 1.0 Max. current 2.0
YC162	1/16W	-55°C to +125°C	50V	100V	100V	E24 ±5% 10Ω ≤ R ≤ 1MΩ Jumper < 0.05Ω	±200 ppm/°C	Rated current 1.0 Max. current 2.0
YC164	1/16W	-55°C to +155°C	50V	100V	100V	E24 ±5% 1Ω ≤ R ≤ 1MΩ E24/E96 ±1% 1Ω ≤ R ≤ 1MΩ Jumper < 0.05Ω	±200 ppm/°C	Rated current 1.0 Max. current 2.0
YC248	1/16W	-55°C to +155°C	50V	100V	100V	E24 ±5% 10Ω ≤ R ≤ 1MΩ E24/E96 ±1% 10Ω ≤ R ≤ 1MΩ Jumper < 0.05Ω		Rated current 2.0 Max. current 10.0
YC324	1/8W	-55°C to +155°C	200V	500V	500V	E24 ±5% 10Ω ≤ R ≤ 1MΩ E24/E96 ±1% 10Ω ≤ R ≤ 1MΩ		-- --
TC122 TC122H TC122M	1/16W	-55°C to +125°C	50V	100V	100V	E24 ±5% 10Ω ≤ R ≤ 1MΩ E24/E96 ±1% 10Ω ≤ R ≤ 1MΩ Jumper < 0.05Ω		Rated current 1.0 Max. current 1.5
TC124 TC124H TC124M	1/16W	-55°C to +125°C	50V	100V	100V	E24 ±5% 10Ω ≤ R ≤ 1MΩ E24/E96 ±1% 10Ω ≤ R ≤ 1MΩ Jumper < 0.05Ω		Rated current 1.0 Max. current 1.5
TC164	1/16W	-55°C to +155°C	50V	100V	100V	E24 ±5% 10Ω ≤ R ≤ 1MΩ E24/E96 ±1% 10Ω ≤ R ≤ 1MΩ Jumper < 0.05Ω		Rated current 1.0 Max. current 2.0
YC158	1/16W	-55°C to +155°C	25V	50V	50V	E24 ±5% 10Ω ≤ R ≤ 100KΩ		-- --
YC358	1/16W	-55°C to +155°C	50V	100V	100V	E24 ±5% 10Ω ≤ R ≤ 330KΩ		-- --

Environmental characteristics				
Performance test		Test method	Procedure	Requirements
Life		MIL-STD-202G-method 108A	1 000 hours at 70 ±5°C applied RCWV 1.5 hours on, 0.5 hours off, still air required	±(2% +0.05Ω) < 100mΩ for jumper
High temperature exposure		MIL-STD-202G-method 108A	1 000 hours at maximum operating temperature depending on specification, unpowered	±(1% +0.05Ω) < 50mΩ for jumper
Moisture resistance		MIL-STD-202G-method 106F	Each temperature / humidity cycle is defined as 8 hours (method 106F), 3 cycles / 24 hours for 10d with 25°C / 65°C 95% R.H	±(2% +0.05Ω) < 100mΩ for jumper
Thermal shock		MIL-STD-202G-method 107G	LCT / UCT, number of cycles required is 300 Maximum transfer time is 20 seconds	±(0.5% +0.05Ω) for 10K to 10M ±(1% +0.05Ω) for others < 50mΩ for jumper
Solderability	Wetting	J-STD-002B testB	Electrical test not required. Magnification 50X Lead-free solder bath at 245 ±3°C Dipping time: 3 ±0.5 seconds	Well tinned (≥95% covered)
	Resistance to soldering heat	MIL-STD-202G-method 210F	Lead-free solder, 260°C, 10 seconds immersion time	±(1% +0.05Ω) < 50mΩ for jumper No visible damage
Short time overload		MIL-R-55342D-para 4.7.5	2.5 times RCWV or maximum overload voltage whichever is less for 5 seconds at room temperature	±(2% +0.05Ω) < 50mΩ for jumper No visible damage

Global part number - Arrays

Ordering example: YC122-JR-07100KL

YC 12 2 — J R — 07 100K L

Series name (code 1-2)
- YC = Array & Network (convex / flat) thick film
- TC = Array (concave) thick film

Size code (inch) (code 3-4)
- 10 = 0201 x 2 (0202)
- 0201 x 4 (0204)
- 12 = 0402 x 2 (0404)
- 0402 x 4 (0408)
- 16 = 0603 x 2 (0606)
- 0603 x 4 (0612)
- 24 = 0602 x 8 (0616)
- 32 = 1206 x 4 (1224)

Number of resistors (code 5)
- 2 = 2 resistors
- 4 = 4 resistors
- 8 = 8 resistors

Schematic (code 6)
- H = Reverse & Half type
- M = Reverse type
- "-" = Based on spec.

Default code (code 17)

Resistance (code 12-16)
- 0R = Jumper
- 10R = 10Ω
- 100R = 100Ω
- 100K = 100KΩ

Taping reel (code 10-11)
- 07 = 7 inch Dia. reel
- 10 = 10 inch Dia. reel
- 13 = 13 inch Dia. reel

T. C. R. (code 9)
- "—" = Based on spec.

Packing style (code 8)
- R = Paper tape reel
- K = Embossed plastic tape reel

Tolerance (code 7)
- F = ±1%
- J = ±5% (for Jumper ordering)

Note: 1. All of our RSMD products are RoHS compliant. "LFP" of the internal 2D reel label mentions "Lead Free Process"
2. Letter L is system default code for ordering only

Phycomp worldwide - Traditional type

Array thick film chip resistors

Size: inch / mm	2 X 0402 / 1 X 1		4 X 0402 / 2 X 1		8 X 0602 / 4.0 X 1.6		4 X 0603 / 3.2 X 1.3				4 X1206 / 5.2 X 3.1
Power	1/16 W		1/16 W		1/16 W		1/16 W				1/8 W
Tolerance	+5%	+1%	+5%	+1%	+5%	+1%	+5%	+1%	+5%	+1%	+5%
Type	R-array / R-network (convex)	R-array / R-network (convex)	R-array / R-network (convex)	R-array / R-network (convex)	R-array / R-network (convex)	R-array / R-network (convex)	R-array / R-network (convex)	R-array / R-network (convex)	R-array / R-network R-network (concave)	R-array / R-network (concave)	R-array / R-network (convex)
Resistance	E24	E24 / E96	E24	E24 / E96	E24	E24 / E96	E24	E24 / E96	E24	E24/E96	E24
Packing	paper tape		paper tape		paper tape		paper tape				blister tape
Quantity 4 000	---	---	---	---	---	---	---	---	---	---	2350 039 10...L
5 000	---	---	---	---	2350 053 10...L	2350 043 1....L	2350 035 10...L	2350 025 1....L	2350 034 10...L	2350 024 1...L	---
10 000	2350 013 11...L	2350 013 2....L	2350 033 11...L	2350 023 2....L	---	---	---	---	---	---	---
Jumper 5 000	---	---	---	---	2350 053 91001L	---	2350 035 91001L	---	2350 034 91001L	---	---
10 000	2350 013 91001L	---	2350 033 91001L	---	---	---	---	---	---	---	---

For ordering rules: See page 14 for E24 / E96 values and the last 4 or 3 digits of the 12NC catalogue number

Phycomp CTC ordering code - Traditional type - North America

Regional code for ordering Phycomp branded products. Please see page 15 for details.

Global part number - Networks

Ordering example: YC158TJR-07100KL

YC 15 8 T J R — 07 100K L

Series name (code 1-2)
YC = Array & Network (convex) thick film

Size code (inch) (code 3-4)
15 = 10Pin/8R (0612)
35 = 10Pin/8R (1225)

Number of resistors (code 5)
8 = 8 resistors

Schematic (code 6)
L = L-type (for YC358)
T = T-type (for YC158/358)

Default code (code 17)

Resistance (code 12-16)
0R = Jumper
10R = 10Ω
100R = 100Ω
100K = 100KΩ

Taping reel (code 10-11)
07 = 7 inch Dia. reel
13 = 13 inch Dia. reel

T. C. R. (code 9)
"—" = Based on spec.

Packing style (code 8)
R = Paper tape reel
K = Embossed plastic tape reel

Tolerance (code 7)
F = ±1%
J = ±5%

Note: 1. All of our RSMD products are RoHS compliant. "LFP" of the internal 2D reel label mentions "Lead Free Process"
2. Letter L is system default code for ordering only

Phycomp worldwide - Traditional type

Network thick film chip resistors			
Size: inch (mm)	**0612 (1632)**	**1225 (3264)**	
Power	1/16 W	1/16 W	
Tolerance	+5%	+5%	
Type	T-type 10 Pin / 8R PIN 5 and PIN 10 no resistance	T-type 10 Pin / 8R PIN 5 and PIN 10 no resistance	L-type 10 Pin / 8R PIN 1 and PIN 6 no resistance
Resistance	E24	E24	E24
Packing	paper tape	blister tape	
Quantity 4 000	---	2350 201 10...L	2350 200 10...L
5 000	2350 230 10...L	---	---

For ordering rules: See page 14 for E24 / E96 values and the last 4 or 3 digits of the 12NC catalogue number

Phycomp CTC ordering code - Traditional type - North America

Regional code for ordering Phycomp branded products. Please see page 15 for details.

Features

- Current sensing of desktop & notebook PC
- Resistance values down to 0.01Ω
- Highly reliable multilayer electrode construction
- Low inductance
- High speed logic circuits

Derating curve

Maximum dissipation (P) in percentage of rated power as a function of the operating ambient temperature (T_{amb}).

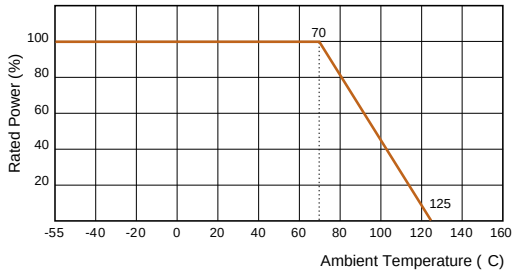

Construction

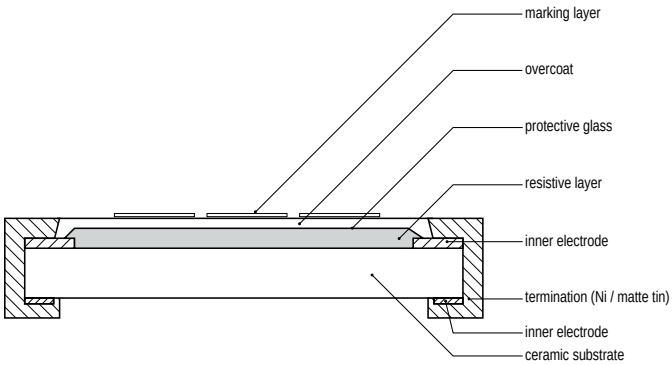

Dimensions

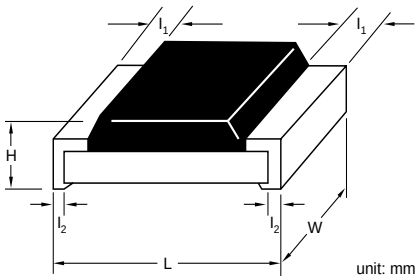

Type	L	W	H	l_1	l_2
RL0402	1.00 ±0.10	0.50 ±0.05	0.35 ±0.05	0.20 ±0.10	0.25 ±0.10
RL0603	1.60 ±0.10	0.80 ±0.10	0.45 ±0.10	0.25 ±0.15	0.25 ±0.15
RL0805	2.00 ±0.10	1.25 ±0.10	0.50 ±0.10	0.35 ±0.20	0.35 ±0.20
RL1206	3.10 ±0.10	1.60 ±0.10	0.55 ±0.10	0.45 ±0.20	0.45±0.20
RL1210	3.10 ±0.10	2.60 ±0.15	0.55 ±0.10	0.50 ±0.20	0.50 ±0.20
RL1218	3.05 ±0.15	4.60 ±0.20	0.55 ±0.10	0.45 ±0.25	0.50 ±0.25
RL2010	5.00 ±0.10	2.50 ±0.15	0.55 ±0.10	0.60 ±0.20	0.50 ±0.20
RL2512	6.35 ±0.10	3.20 ±0.15	0.55 ±0.10	0.60 ±0.20	0.50 ±0.20

RL - Thick film low ohmic chip resistors, 0402 to 2512

Electrical characteristics

Type	Power P_{70}	Operating Temp. range	Resistance range & tolerance		T. C. R. (ppm/°C)	Jumper criteria	
RL0402	1/16W	-55°C to +125°C	E24 ±1%, ±2%, ±5%	50mΩ ≤ R < 1Ω	See following table "T.C.R.- RL series"	Max. resistance Rated current	20mΩ 1.5A
RL0603	1/10W			10mΩ ≤ R < 1Ω		Max. resistance Rated current	20mΩ 2A
RL0805	1/8W			10mΩ ≤ R < 1Ω		Max. resistance Rated current	20mΩ 2.5A
	1/4W			10mΩ ≤ R < 1Ω		--	--
RL1206	1/4W			10mΩ ≤ R < 1Ω		Max. resistance Rated current	20mΩ 3.5A
	1/2W			10mΩ ≤ R < 1Ω		--	--
RL1210	1/2W			10mΩ ≤ R < 1Ω		--	--
RL1218	1W			10mΩ ≤ R < 1Ω		--	--
RL2010	3/4W			10mΩ ≤ R < 1Ω		--	--
RL2512	1W			10mΩ ≤ R < 1Ω		--	--

Note: The partial values of 25 / 40 / 50 / 60 / 250 / 400 / 500 mΩ are also available

T. C. R. - RL series

Type	Operating Temp. range	Resistancec range	T. C. R.					
			50mΩ≤R<100mΩ		100mΩ≤R<500mΩ		500mΩ≤R<1Ω	
RL0402	-55°C to +125°C	50mΩ≤R<1Ω	±1000 ppm/°C		±800 ppm/°C		±300 ppm/°C	
			10mΩ≤R≤36mΩ	36mΩ≤R≤91mΩ	91mΩ<R≤500mΩ		500mΩ<R<1Ω	
RL0603	-55°C to +125°C	10mΩ≤R<1Ω	±1 500 ppm/°C	±1 200 ppm/°C	±800 ppm/°C		±300 ppm/°C	
			10mΩ≤R≤18mΩ	18mΩ<R≤47mΩ	47mΩ<R≤91mΩ	91mΩ<R≤360mΩ	360mΩ<R≤500mΩ	500mΩ<R<1Ω
RL0805	-55°C to +125°C	10mΩ≤R<1Ω	±1 500 ppm/°C	±1 200 ppm/°C	±1 000 ppm/°C	±600 ppm/°C	±300 ppm/°C	±200 ppm/°C
RL1206								
RL1210			±1 500 ppm/°C	±1 000 ppm/°C	±800 ppm/°C	±600 ppm/°C	±300 ppm/°C	±200 ppm/°C
			10mΩ≤R≤30mΩ	30mΩ<R≤56mΩ	56mΩ<R≤180mΩ	180mΩ<R<1Ω		
RL1218	-55°C to +125°C	10mΩ≤R<1Ω	±2 000 ppm/°C	±1 000 ppm/°C	±700 ppm/°C	±250 ppm/°C		
			10mΩ≤R≤18mΩ	18mΩ<R≤47mΩ	47mΩ<R≤91mΩ	91mΩ<R≤360mΩ	360mΩ<R≤500mΩ	500mΩ<R<1Ω
RL2010	-55°C to +125°C	10mΩ≤R<1Ω	±1 500 ppm/°C	±1 200 ppm/°C	±1 000 ppm/°C	±600 ppm/°C	±300 ppm/°C	±200 ppm/°C
RL2512			±1 500 ppm/°C	±1 200 ppm/°C	±800 ppm/°C	±600 ppm/°C	±300 ppm/°C	±200 ppm/°C

Environmental characteristics

Performance test		Test method	Procedure	Requirements
Life		MIL-STD-202G-method 108A	1 000 hours at 70°C ±5°C applied RCWV 1.5 hours on, 0.5 hours off, still air required	±2%
High temperature exposure		MIL-STD-202G-method 108A	1 000 hours at maximum operating temperature depending on specification, unpowered	±1%
Moisture resistance		MIL-STD-202G-method 106F	Each temperature / humidity cycle is defined as 8 hours (method 106F), 3 cycles / 24 hours for 10d with 25°C / 65°C 95% R.H	±2%
Thermal shock		MIL-STD-202G-method 107G	LCT / UCT, number of cycles required is 300 Maximum transfer time is 20 seconds	±1%
Solderability	Wetting	J-STD-002B testB	Electrical test not required. Magnification 50X Lead-free solder bath at 245 ±3°C Dipping time: 3 ±0.5 seconds	Well tinned (≥95% covered) No visible damage
	Resistance to soldering heat	MIL-STD-202G-method 210F	Lead-free solder, 260°C, 10 seconds immersion time	±1% No visible damage
Short time overload		MIL-R-55342D-para 4.7.5	RL standard power: 6.25 times of rated power for 5 seconds at room temperature RL high power: 5 times of rated power for 5 seconds at room temperature	±2% No visible damage

RL - Thick film low ohmic chip resistors, 0402 to 2512

Global part number - Preferred type

Ordering example: RL0603JR-070R01L

RL 0603 J R — 07 0R01 L

Series name (code 1-2)
- RL = Thick Film Low ohmic

Size code (code 3-6)
(inch / metric)
- 0402 = 1.0 x 0.5
- 0603 = 1.6 x 0.8
- 0805 = 2.0 x 1.25
- 1206 = 3.2 x 1.6
- 1210 = 3.2 x 2.6
- 1218 = 3.2 x 4.5
- 2010 = 5.0 x 2.5
- 2512 = 6.35 x 3.2

Tolerance (code 7)
- F = ±1%
- G = ±2%
- J = ±5%

Default code(1/2) (code 17)

Resistance (code 12-16)
- 0R01 = 0.01Ω
- 0R1 = 0.1Ω
- 0R2 = 0.2Ω

Taping reel (code 10-11)
- 07 = 7 inch Dia. reel
- 10 = 10 inch Dia. reel
- 13 = 13 inch Dia. reel

T. C. R. (code 9)
- "—" = Based on spec.
- (— for thick film only)

Packing style (code 8)
- R = Paper tape reel
- K = Embossed plastic tape reel

Note: 1. All of our RSMD products are RoHS compliant. "LFP" of the internal 2D reel label mentions "Lead Free Process"
2. Letter L is system default code for ordering only

RL - Thick film low ohmic chip resistors, 0402 to 2512

Phycomp worldwide - Traditional type								
Low ohmic chip resistors								
Size: inch (mm)	**0402 (1005)**		**0603 (1608)**		**0805 (2012)**		**1206 (3216)**	
Power	1/16 W		1/10 W		1/8 W		1/4 W	
Tolerance	+5%	+1%	+5%	+1%	+5%	+1%	+5%	+1%
Resistance	E24	E24	E24	E24	E24	E24	E24	E24
Packing	paper tape		paper tape		paper tape		paper tape	
Quantity 5 000	---	---	2350 512 10…L	2350 512 12…L	2350 511 10…L	2350 511 12…L	2350 510 10…L	2350 510 12…L
10 000	2350 513 20…L	2350 513 22…L	---	---	---	---	---	---

For ordering rules: See page 14 for E24 / E96 values and the last 4 or 3 digits of the 12NC catalogue number

Phycomp worldwide - Traditional type								
Low ohmic chip resistors								
Size: inch (mm)	**1210 (3225)**		**1218 (3248)**		**2010 (5025)**		**2512 (6432)**	
Power	1/2 W		1 W		3/4 W		1 W	
Tolerance	+5%	+1%	+5%	+1%	+5%	+1%	+5%	+1%
Resistance	E24	E24	E24	E24	E24	E24	E24	E24
Packing	paper tape		blister tape		blister tape		blister tape	
Quantity 4 000	---	---	2322 735 64...L	2322 735 7....L	2322 760 90..0L/60..7L	2322 761 90..0L/6...7L	2322 762 90..0L/60..7L	2322 763 90..0L/6...7L
5 000	2390 735 90..0L/60..7L	2390 735 3....L	---	---	---	---	---	---

For ordering rules: See page 14 for E24 / E96 values and the last 4 or 3 digits of the 12NC catalogue number

Phycomp CTC ordering code - Traditional type - North America
Regional code for ordering Phycomp branded products. Please see page 15 for details.

RL - Thick film low ohmic, high power chip resistors, 0402 / 1206

Global part number - Preferred type

Ordering example: RL0805JR-7W0R01L

RL 0805 J R — 7W 0R01 L

Series name (code 1-2)
RL = Thick film low ohmic

Size code (code 3-6)
(inch / metric)
0805 = 2.0 x 1.25
1206 = 3.2 x 1.6

Tolerance (code 7)
F = ±1%
G = ±2%
J = ±5%

Packing style (code 8)
R = Paper tape reel

Default code (code 17)

Resistance (code 12-16)
0R01 = 0.01Ω
0R1 = 0.1Ω
0R2 = 0.2Ω

Taping reel (code 10-11)
7W = 7 inch Dia. reel and
2 x standard power type

T. C. R. (code 9)
"—" = Based on spec.
(— for thick film only)

Note: 1. All of our RSMD products are RoHS compliant. "LFP" of the internal 2D reel label mentions "Lead Free Process"
2. Letter L is system default code for ordering only

Phycomp worldwide - Traditional type

Low ohmic high power chip resistors				
Size: inch (mm)	**0805 (2012)**		**1206 (3216)**	
Power	1/4 W		1/2 W	
Tolerance	+5%	+1%	+5%	+1%
Resistance	E24	E24 / E96	E24	E24 / E96
Packing	paper tape		paper tape	
Quantity 5 000	2350 511 15…L	2350 511 17…L	2350 519 01…L	2350 519 1….L

For ordering rules: See page 14 for E24 / E96 values and the last 4 or 3 digits of the 12NC catalogue number

Phycomp CTC ordering code - Traditional type - North America

Regional code for ordering Phycomp branded products. Please see page 15 for details.

PT - Thick film low ohmic low T. C. R. chip resistors, 0402 to 2512

Features

- Excellent T. C. R.
- Precision current sensing control
- Excellent performance for current sensing applications
- Low ohmic and high power

Derating curve

Maximum dissipation (P) in percentage of rated power as a function of the operating ambient temperature (T_{amb}).

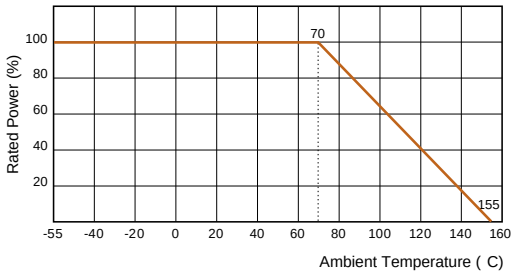

Construction

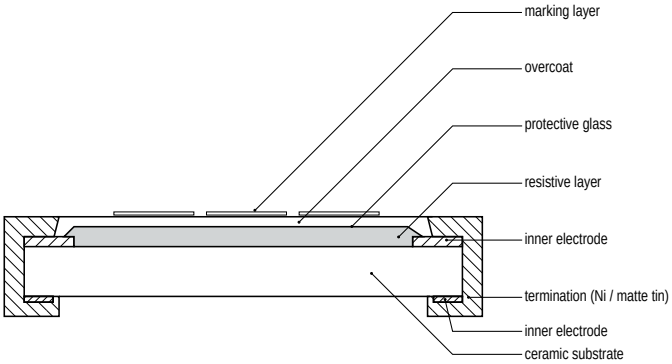

Dimensions

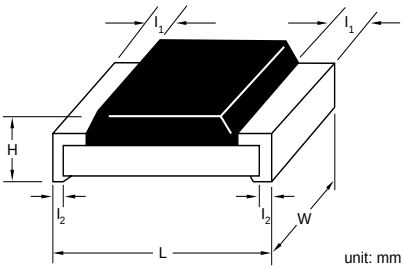

Type	L	W	H	l_1	l_2
PT0402	1.00 ±0.10	0.50 ±0.05	0.35 ±0.05	0.20 ±0.10	0.25 ±0.10
PT0603	1.60 ±0.10	0.80 ±0.10	0.45 ±0.10	0.25 ±0.15	0.25 ±0.15
PT0805	2.00 ±0.10	1.25 ±0.10	0.55 ±0.10	0.35 ±0.20	0.35 ±0.20
PT1206 (50mΩ ≤ R < 75mΩ & 91mΩ ≤ R < 1Ω)	3.10 ±0.10	1.60 ±0.10	0.55 ±0.10	0.45 ±0.20	0.45 ±0.20
PT1206 (75mΩ≤R<91mΩ)	3.10±0.10	1.60±0.10	0.55±0.10	0.75±0.20	0.45±0.20
PT2010	5.00 ±0.10	2.50 ±0.15	0.55 ±0.10	0.60 ±0.20	0.50 ±0.20
PT2512	6.35 ±0.10	3.20 ±0.15	0.55 ±0.10	0.60 ±0.20	0.50 ±0.20

Note: For relevant physical dimensions, please refer to above construction outlines
Please contact our sales offices, distributors and representatives in your region before ordering

PT - Thick film low ohmic low T. C. R. chip resistors, 0402 to 2512

Electrical characteristics						
Type	Power P_{70}	Operating Temp. range	Max. working voltage	Tolerance	Resistance range & T. C. R.	Jumper criteria
PT0402	1/16W	-55°C to +155°C	(PxR)^1/2	E24 ±2%, ±5% E24/E96 ±1%	50mΩ ≤ R < 68mΩ ±600 ppm/°C 68mΩ ≤ R < 100mΩ ±300 ppm/°C 100mΩ ≤ R < 1Ω ±200 ppm/°C	Max. resistance 5mΩ Rated current 3A
	1/8W					
	1/6W				68mΩ ±300 ppm/°C	
PT0603	1/10W				50mΩ 0/+400 ppm/°C 50mΩ < R < 68mΩ 0/+350 ppm/°C 68mΩ ≤ R < 100mΩ 0/+300 ppm/°C 100mΩ ≤ R < 1Ω ±200 ppm/°C	Max. resistance 8mΩ Rated current 5A
	1/5W					
	1/3W				50mΩ 0/+400 ppm/°C 50mΩ < R < 68mΩ 0/+350 ppm/°C 68mΩ 0/+300 ppm/°C	
PT0805	1/8W				50mΩ 0/+350 ppm/°C 50mΩ < R < 68mΩ 0/+300 ppm/°C 68mΩ ≤ R < 100mΩ 0/+250 ppm/°C 100mΩ ≤ R < 1Ω ±100 ppm/°C	Max. resistance 5mΩ Rated current 6A
	1/4W					
PT1206	1/4W				50mΩ ≤ R < 75mΩ ±350ppm 75mΩ ≤ R ≤ 100mΩ ±100ppm 100mΩ < R < 1Ω ±75ppm	Max. resistance 5mΩ Rated current 10A
	1/2W					
PT2010	3/4W				100mΩ ±100 ppm/°C 100mΩ < R < 1Ω ±75 ppm/°C	Max. resistance --- Rated current ---
	1W					
PT2512	1W					Max. resistance --- Rated current ---
	2W					

Environmental characteristics				
Performance test		Test method	Procedure	Requirements
Life		MIL-STD-202G-method 108A	1 000 hours at 70 ±5°C applied RCWV 1.5 hours on, 0.5 hours off, still air required	±(1% +0.0005Ω) < 20mΩ for jumper
High temperature exposure		MIL-STD-202G-method 108A	1 000 hours at maximum operating temperature depending on specification, unpowered	±(1% +0.0005Ω) < 20mΩ for jumper
Moisture resistance		MIL-STD-202G-method 106F	Each temperature / humidity cycle is defined as 8 hours (method 106F), 3 cycles / 24 hours for 10d with 25°C / 65°C 95% R.H	±(0.5% +0.0005Ω) < 20mΩ for jumper
Thermal shock		MIL-STD-202G-method 107G	LCT / UCT, number of cycles required is 300 Maximum transfer time is 20 seconds	±(1% +0.0005Ω) < 10mΩ for jumper
Solderability	Wetting	J-STD-002B testB	Electrical test not required. Magnification 50X Lead-free solder bath at 245 ±3°C Dipping time: 3 ±0.5 seconds	Well tinned (≥95% covered) No visible damage
	Resistance to soldering heat	MIL-STD-202G-method 210F	Lead-free solder, 260°C, 10 seconds immersion time	±(0.5% +0.0005Ω) No visible damage < 10mΩ for jumper
Short time overload		MIL-R-55342D-para 4.7.5	PT standard power: 6.25 times of rated power for 5 seconds at room temperature PT high power: 5 times of rated power for 5 seconds at room temperature PT jumper: 2.5 times of rated current for 5 seconds at room temperature	±(1% +0.0005Ω) No visible damage < 10mΩ for jumper

PT - Thick film low ohmic low T. C. R. chip resistors, 0402 to 2512

Global part number - Preferred type

Ordering example: PT2512FK-070R01L

PT 2512 F K — 07 0R01 L

Series name (code 1-2)
PT = Thick film low ohmic low T. C. R.

Size code (code 3-6)
(inch / metric)
0402 = 1.0 x 0.5
0603 = 1.6 x 0.8
0805 = 2.0 x 1.25
1206 = 3.2 x 1.6
2010 = 5.0 x 2.5
2512 = 6.35 x 3.2

Tolerance (code 7)
F = ± 1%
G = ± 2%
J= ± 5%
"—" for Jumper ordering

Packing style (code 8)
R = Paper tape reel
K = Embossed plastic tape reel

Default code(1/2) (code 17)

Resistance (code 12-16)
0R = Jumper
0R1 = 0.1Ω
0R2 = 0.2Ω

Taping reel (code 10-11)
07 = 7 inch Dia. reel
13 = 13 inch Dia. reel
7W = 7 inch Dia. reel and 2 x standard power type
7T = 7 inch Dia. reel and 3 x standard power type

T. C. R. (code 9)
"—" = Based on spec.

Note: 1. All of our RSMD products are RoHS compliant. "LFP" of the internal 2D reel label mentions "Lead Free Process"
2. Letter L is system default code for ordering only
3. PT series products are available by "Global part number" only

Phycomp CTC ordering code - Traditional type - North America

Regional code for ordering Phycomp branded products. Please see page 15 for details.

PT - Thick film low ohmic low T. C. R. chip resistors, wide termination, 0815

Features

- Excellent T. C. R.
- Precision current sensing control
- Excellent performance for current sensing applications
- Low ohmic and high power

Derating curve

Maximum dissipation (P) in percentage of rated power as a function of the operating ambient temperature (T_{amb}).

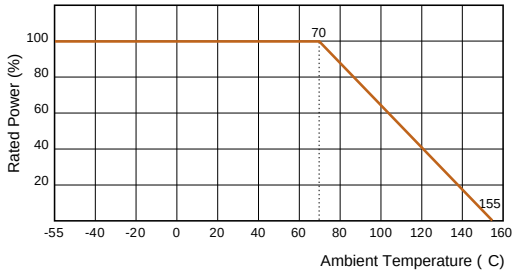

Construction

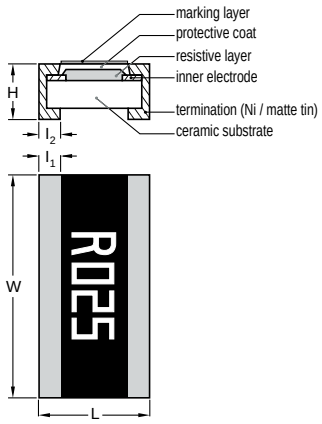

Dimensions

Type	L	W	H	l_1	l_2
PT0815	2.00 ±0.10	3.70 ±0.10	0.50 ±0.10	0.35 ±0.20	0.40 ±0.20

PT - Thick film low ohmic low T. C. R. chip resistors, wide termination, 0815

Electrical characteristics					
Type	Power P_{70}	Operating Temp. range	Max. working voltage	Tolerance	Resistance range & T. C. R.
PT0815	1/2W	-55°C to +155°C	(PxR)^1/2	E24 ±2%, ±5% E24/E96 ±1%	25mΩ ≤ R ≤ 50mΩ ±100 ppm/°C
	1W				

Environmental characteristics				
Performance test		Test method	Procedure	Requirements
Life		MIL-STD-202G-method 108A	1 000 hours at 70 ±5°C applied RCWV 1.5 hours on, 0.5 hours off, still air required	±(1% +0.0005Ω)
High temperature exposure		MIL-STD-202G-method 108A	1 000 hours at maximum operating temperature depending on specification, unpowered	±(1% +0.0005Ω)
Moisture resistance		MIL-STD-202G-method 106F	Each temperature / humidity cycle is defined as 8 hours (method 106F), 3 cycles / 24 hours for 10d with 25°C / 65°C 95% R.H	±(0.5% +0.0005Ω)
Solderability	Wetting	J-STD-002B testB	Electrical test not required. Magnification 50X Lead-free solder bath at 245 ±3°C Dipping time: 3 ±0.5 seconds	Well tinned (≥95% covered) No visible damage
	Resistance to soldering heat	MIL-STD-202G-method 210F	Lead-free solder, 260°C, 10 seconds immersion time	±(0.5% +0.0005Ω) No visible damage
Short time overload		MIL-R-55342D-para 4.7.5	PT standard power: 6.25 times of rated power for 5 seconds at room temperature PT high power: 5 times of rated power for 5 seconds at room temperature	±(1% +0.0005Ω) No visible damage

PT - Thick film low ohmic low T. C. R. chip resistors, wide termination, 0815

Global part number - Preferred type

Ordering example: PT0815FK-070R01L

PT 0815 F K — 07 0R01 L

Series name (code 1-2)
PT = Thick film low ohmic low T. C. R.

Size code (code 3-6)
(inch / metric)
0815 = 2.00 x 3.70

Tolerance (code 7)
F = ±1%
G = ±2%
J = ±5%

Packing style (code 8)
K = Embossed plastic tape reel

Default code(1/2) (code 17)

Resistance (code 12-16)
0R025 = 0.025Ω
0R05 = 0.05Ω

Taping reel (code 10-11)
07 = 7 inch Dia. reel
7W = 7 inch Dia. reel and
2 x standard power type

T. C. R. (code 9)
"—" = base on spec

Note: 1. All of our RSMD products are RoHS compliant. "LFP" of the internal 2D reel label mentions "Lead Free Process"
2. Letter L is system default code for ordering only
3. PT series products are available by "Global part number" only

Features

- Excellent T. C. R. compared to thick film low ohmic
- Precision current sensing control
- Excellent performance for current sensing applications
- Ultra low ohmic down to 0.0005Ω

Derating curve

Maximum dissipation (P) in percentage of rated power as a function of the operating ambient temperature (T_{amb}).

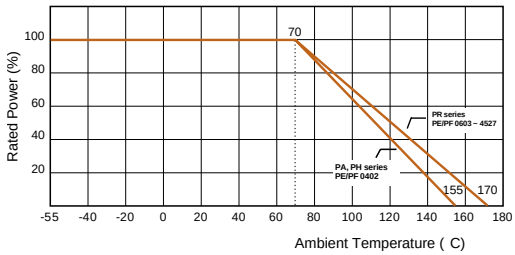

Construction

PR/PA series

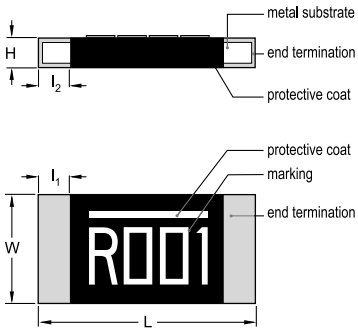

PF / PH / PE series

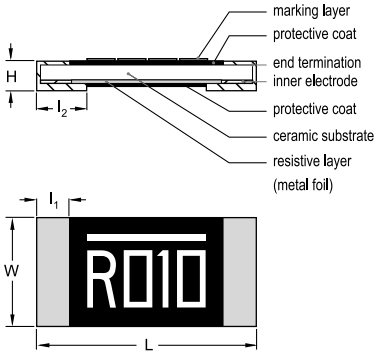

Note: construction will be adjusted to resistance value (only for PF series).

Dimensions

PR series unit: mm

Type	Resistance range	L	W	H	l_1	l_2
PR1206	1mΩ ≤ R ≤ 6mΩ	3.20 ±0.25	1.60 ±0.25	0.64 ±0.25	0.50 ±0.25	0.50 ±0.25
PR2010	1mΩ ≤ R ≤ 3mΩ	5.10 ±0.25	2.54 ±0.25	0.80 ±0.25	1.30 ±0.25	1.30 ±0.25
	4mΩ ≤ R ≤ 100mΩ	5.10 ±0.25	2.54 ±0.25	0.64 ±0.25	0.80 ±0.25	0.80 ±0.25
PR2512 (1)	1mΩ ≤ R ≤ 2mΩ	6.40 ±0.20	3.20 ±0.20	0.75 ±0.15	1.20 ±0.20	1.20 ±0.20
	3mΩ ≤ R ≤ 5mΩ			0.55 ±0.10	0.60 ±0.20	0.60 ±0.20
PR2512 (2)	0.5mΩ ≤ R ≤ 4mΩ	6.25 ±0.25	3.30 ±0.25	0.78 ±0.25	1.88 ±0.25	1.88 ±0.25
	5mΩ ≤ R ≤ 75mΩ			0.64 ±0.25	1.11 ±0.25	1.11 ±0.25

PA series unit: mm

Type	Resistance range	L	W	H	l_1	l_2
PA2512	1mΩ ≤ R ≤ 10mΩ	6.50 ±0.20	3.20 ±0.20	0.65 ±0.15	0.90 ±0.20	0.90 ±0.20

Note: 1. Apply to ordering codes ending in "L"
2. Apply to ordering codes ending in "Z"
Please contact sales offices, distributors and representatives in your region before ordering

Dimensions

PF / PH / PE series

unit: mm

Type	Resistance range	L	W	H	l_1	l_2
PF / PE0402	10mΩ ≤ R ≤ 50mΩ	1.00 ± 0.30	0.50 ± 0.20	0.45 ± 0.20	0.25 ± 0.10	---
PF / PE0603 (2)	5mΩ ≤ R < 100mΩ	1.60 ± 0.20	0.80 ± 0.20	0.60 ± 0.15	---	0.30 ± 0.15
PF / PH0805 (1)	10mΩ < R ≤ 50mΩ	2.03 ± 0.25	1.27 ± 0.25	0.33 ± 0.12	0.38 ± 0.25	0.38 ± 0.25
PF / PH / PE0805	3mΩ	2.10 ± 0.20	1.35 ± 0.20	0.65 ± 0.20	0.75 ± 0.15	---
PF / PH / PE0805 (2)	4mΩ	2.00 ± 0.20	1.25 ± 0.20	0.60 ± 0.15	---	0.70 ± 0.15
	5mΩ					0.63 ± 0.15
	6mΩ ≤ R ≤ 7mΩ					0.55 ± 0.15
	8mΩ ≤ R < 100mΩ					0.40 ± 0.15
PF / PH1206 (1)	10mΩ < R ≤ 50mΩ	3.20 ± 0.25	1.60 ± 0.25	0.60 ± 0.25	0.50 ± 0.25	0.65 ± 0.25
PF / PH / PE1206 (2)	3mΩ	3.20 ± 0.20	1.60 ± 0.20	0.60 ± 0.15	---	1.30 ± 0.20
	4mΩ					1.20 ± 0.20
	5mΩ ≤ R ≤ 8mΩ					1.15 ± 0.20
	9mΩ ≤ R < 100mΩ					0.58 ± 0.20
PF / PE2010	5mΩ ≤ R ≤ 9mΩ	5.00 ± 0.20	2.50 ± 0.20	0.60 ± 0.15	---	1.50 ± 0.20
	10mΩ ≤ R < 100mΩ					0.60 ± 0.20
PF2512 (1)	6mΩ	6.45 ± 0.25	3.25 ± 0.25	0.70 ±0 .25	0.75 ± 0.25	1.85 ± 0.25
	7mΩ ≤ R ≤ 15mΩ					1.55 ± 0.25
	20mΩ ≤ R ≤ 50mΩ (1W)				1.30 ± 0.25	0.75 ± 0.25
	20mΩ ≤ R ≤ 50mΩ (2W)				0.75 ± 0.25	1.30 ± 0.25
PF / PE2512 (2)	1mΩ	6.30 ± 0.20	3.10 ± 0.20	0.60 ± 0.15	---	2.93 ± 0.20
	2mΩ					2.70 ± 0.20
	3mΩ					2.50 ± 0.20
	4mΩ					2.15 ± 0.20
	5mΩ					1.95 ± 0.20
	6mΩ ≤ R ≤ 8mΩ					1.90 ± 0.20
	9mΩ ≤ R < 100mΩ					0.95 ± 0.20
PF / PE4527	5mΩ	11.50±0.20	7.00±0.20	0.60±0.15	2.90±0.20	---
	6mΩ ≤ R <1Ω	11.50 ± 0.20	7.00 ± 0.20	0.60 ± 0.15	---	2.60 ± 0.20

Note: 1. Apply to ordering codes ending in "L"
2. Apply to ordering codes ending in "Z"
3. For relevant physical dimensions, please refer to above construction outlines
Please contact with sales offices, distributors and representatives in your region before ordering

PR/PA/PF/PH/PE - Current sensors - low T. C. R. chip resistors, 0402 to 2512

Electrical characteristics								
Type	Technology	Size	Power P70	Operating Temp. range	Max. working voltage	Tolerance	Resistance range	Min. T. C. R.
PE	Metal Foil	0402	1/16W	-55°C to 155°C	(PxR)^1/2	±1% ±2% ±5%	10mΩ ≤ R ≤ 50mΩ	±100 ppm/°C
			1/8W					
			1/4W					
		0603	1/10W	-55°C to 170°C			5mΩ ≤ R<100mΩ	±50 ppm/°C ±75 ppm/°C ±100 ppm/°C
			1/5W					
			1/3W					
			2/5W					
			1/2W					
		0805	1/8W				3mΩ ≤ R<100mΩ	
			1/4W					
			1/3W					
			1/2W					
		1206	1/4W				3mΩ ≤ R<100mΩ	
			1/2W					
			1W					
		2010	1/2W				5mΩ ≤ R<100mΩ	
			1W					
		2512	1W				6mΩ ≤ R<100mΩ	
			2W					
			3W					
		4527	2W				5mΩ ≤ R<1Ω	
			3W					
			5W					
PF	Metal Foil	0402	1/16W	-55°C to 155°C	(PxR)^1/2	±1% ±2% ±5%	10mΩ ≤ R ≤ 50mΩ	±100 ppm/°C
			1/8W					
			1/4W					
		0603	1/10W	-55°C to 170°C			5mΩ ≤ R < 100mΩ	±50 ppm/°C ±75 ppm/°C ±100 ppm/°C
			1/5W					
			1/3W					
			2/5W					
			1/2W					
		0805	1/8W				3mΩ ≤ R < 100mΩ	
			1/4W					
			1/3W					
			1/2W					
		1206	1/4W				3mΩ ≤ R < 100mΩ	
			1/2W					
			1W					
		2010	1/2W				5mΩ ≤ R < 100mΩ	
			1W					
		2512	1W				6mΩ ≤ R < 100mΩ	
			2W					
			3W					
		4527	2W				5mΩ ≤ R < 1Ω	
			3W					
			5W					
PH	Metal Foil	0805	4/5W	-55°C to 155°C	(PxR)^1/2	±1%, ±2%, ±5%	4mΩ ≤ R ≤ 50mΩ	
		1206	1W					

Note: Please contact with sales offices, distributors and representatives in your region before ordering

PR/PA/PF/PH/PE - Current sensors - low T. C. R. chip resistors, 0402 to 4527

Electrical characteristics								
Type	Technology	Size	Power P70	Operating Temp. range	Max. working voltage	Tolerance	Resistance range	Min. T. C. R.
PR	Metal Plate	1206	1/4W	-55°C to 170°C	(PxR)^1/2	±1%, ±2%, ±5%	1mΩ ≤ R ≤ 6mΩ	±50 ppm/°C
			1/2W					
			1W					
		2010	1/2W			±1%, ±2%, ±5%	1mΩ ≤ R < 100mΩ	
			1W					
		2512	1W			±0.5%	7mΩ ≤ R ≤ 75mΩ	
						±1%, ±2%, ±5%	0.5mΩ ≤ R ≤ 2mΩ	±200 ppm/°C
							3mΩ ≤ R ≤ 5mΩ	±100 ppm/°C
			2W			±0.5%	7mΩ ≤ R ≤ 75mΩ	±50 ppm/°C
						±1%, ±2%, ±5%	0.5mΩ ≤ R ≤ 2mΩ	±200 ppm/°C
							3mΩ ≤ R ≤ 5mΩ	±100 ppm/°C
			3W			±1%, ±2%, ±5%	0.5mΩ ≤ R ≤ 10mΩ	±50 ppm/°C
PA	Metal Plate	2512	1W	-55°C to 155°C	(PxR)^1/2	±1%, ±5%	1mΩ ≤ R ≤ 10mΩ	±100 ppm/°C
			2W					
			3W					

Note: Please contact with sales offices, distributors and representatives in your region before ordering

Environmental characteristics				
Performance test		Test method	Procedure	Requirements
Life		MIL-STD-202G-method 108A	1 000 hours at 70 ±5°C applied RCWV 1.5 hours on, 0.5 hours off, still air required	±(1% +0.0005Ω)
High temperature exposure		MIL-STD-202G-method 108A	1 000 hours at maximum operating temperature depending on specification, unpowered	±(1% +0.0005Ω)
Moisture resistance		MIL-STD-202G-method 106F	Each temperature / humidity cycle is defined as 8 hours (method 106F), 3 cycles / 24 hours for 10d with 25°C / 65°C 95% R.H	±(0.5% +0.0005Ω)
Thermal shock		MIL-STD-202G-method 107G	LCT / UCT, number of cycles required is 300 Maximum transfer time is 20 seconds	±(0.5% +0.0005Ω)
Solder-ability	Wetting	J-STD-002B testB	Electrical test not required. Magnification 50X Lead-free solder bath at 245 ±3°C Dipping time: 3 ±0.5 seconds	Well tinned (≥95% covered)
	Resistance to soldering heat	MIL-STD-202G-method 210F	Lead-free solder, 260°C, 10 seconds immersion time	±(0.5% +0.0005Ω) No visible damage
Short time overload		MIL-R-55342D-para 4.7.5	5 times of rated power for 5 seconds at room temperature	±(0.5% +0.0005Ω) No visible damage

PR/PA/PF/PH/PE - Current sensors - low T. C. R. chip resistors, 0402 to 2512

Global part number - Preferred type

Ordering example: PF2512FKF070R01L

PF 2512 F K F 07 0R01 L

Series name (code 1-2)
PR/PA/PF/PH/PE = Current sensors - low T. C. R.

Size code (code 3-6)
(inch / metric)
0402 = 1.0 x 0.5
0603 = 1.6 x 0.8
0805 = 2.0 x 1.25
1206 = 3.2 x 1.6
2010 = 5.0 x 2.5
2512 = 6.35 x 3.2
4527 = 11.0 x 7.0

Tolerance (code 7)
F = ±1%
G = ±2%
J = ±5%

Packing style (code 8)
R = Paper tape reel
K = Embossed plastic tape reel

Default code(1/2) (code 17)
L / Z = Default code

Resistance (code 12-16)
0U5=0.0005Ω
0R01 = 0.01Ω
0R1 = 0.1Ω
0R2 = 0.2Ω

Taping reel (code 10-11)
07 = 7 inch Dia. reel
7W = 7 inch Dia. reel
2 x standard power type
7T = 7 inch Dia. reel
3 x standard power type
47 = 7 inch Dia. reel
4 x standard power type
57 = 7 inch Dia. reel
5 x standard power type

T. C. R. (code 9)
E = ±50 ppm/°C
M = ±75 ppm/°C
F = ±100 ppm/°C
G = ±200 ppm/°C

Note: 1. All of our RSMD products are RoHS compliant. "LFP" of the internal 2D reel label mentions "Lead Free Process"
2. PH series products are available by "Global part number" only

Phycomp worldwide - Traditional type

Current Sensor - Low T. C. R. / PR series								
Size: inch (mm)	2010 (5025)				2512 (6432)			
Power	1/2 W		1 W		1 W		2 W	
Tolerance	+5%	+1%	+5%	+1%	+5%	+1%	+5%	+1%
Packing	blister tape				blister tape			
Quantity 4 000	2322 760 63..0L	2322 761 11.. 0L	2322 760 65.. 0L	2322 761 13.. 0L	2322 762 94..0L	2322 763 95..0L	2322 762 10..0L	2322 763 10..0L

For ordering rules: See page 14 for E24 / E96 values and the last 4 or 3 digits of the 12NC catalogue number

Phycomp worldwide - Traditional type

Current Sensor - Low T. C. R. / PF series				
Size: inch (mm)	2512 (6432)			
Power	1 W		2 W	
Tolerance	+5%	+1%	+5%	+1%
Packing	blister tape			
Quantity 4 000	2322 764 96..L	2322 764 97..L	2322 764 10..L	2322 764 30..L

For ordering rules: See page 14 for E24 / E96 values and the last 4 or 3 digits of the 12NC catalogue number

Phycomp CTC ordering code - Traditional type - North America

Regional code for ordering Phycomp branded products. Please see page 15 for details.

PE/PF - Current sensors - low T. C. R. chip resistors, wide termination, 0612 to 0830

Features

- Excellent T. C. R. compared to thick film low ohmic
- Precision current sensing control
- Excellent performance for current sensing applications
- Low ohmic and high power

Derating curve

Maximum dissipation (P) in percentage of rated power as a function of the operating ambient temperature (T_{amb}).

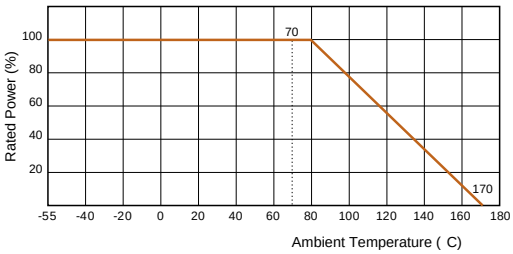

Construction

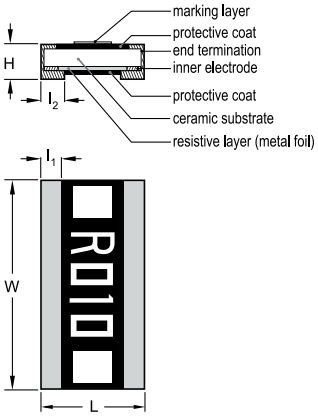

Dimensions

Type	Resistance range	L	W	H	l_1	l_2
PE / PF0612 (2)	1mΩ	1.60 ±0.20	0.32 ±0.20	0.60 ±0.15	---	0.55±0.20
	2mΩ ≤ R ≤ 4mΩ	1.60 ±0.20	0.32 ±0.20	0.60 ±0.15	---	0.40±0.20
	5mΩ ≤ R ≤ 300mΩ	1.60 ±0.20	0.32 ±0.20	0.60 ±0.15	---	0.30±0.15
PE / PF0815 (2)	1mΩ	2.50±0.20	3.70±0.20	0.60±0.15	---	0.95±0.20
	2mΩ	2.50±0.20	3.70±0.20	0.60±0.15	---	0.75±0.20
	3mΩ ≤ R ≤ 100mΩ	2.50±0.20	3.70±0.20	0.60±0.15	---	0.60±0.20
PE / PF0815 (1)	10 / 15 / 20mΩ	2.15 ±0.20	3.75 ±0.25	0.65 ±0.25	0.65 ±0.25	0.70 ±0.25
PE / PF0830 (2)	6 / 8 / 10mΩ	2.00 ±0.20	7.50 ±0.30	0.60 ±0.15	---	0.60 ±0.15
	1mΩ ≤ R ≤ 100mΩ (except 6/8/10mΩ)	2.50 ±0.20	7.50 ±0.30	0.60 ±0.15	---	0.58 ±0.15

Note: 1. Apply to ordering codes ending in "L"
2. Apply to ordering codes ending in "Z"
Please contact sales offices, distributors and representatives in your region before ordering

PE/PF - Current sensors - low T. C. R. chip resistors, wide termination, 0612 to 0830

Electrical characteristics								
Type	Technology	Size	Power P_{70}	Operating Temp. range	Max. working voltage	Tolerance	Resistance range & T. C. R.	
PF	Metal Foil wide termination	0612	1W	-55°C to 170°C	(PxR)^1/2	±1%, ±2%, ±5%	1mΩ ≤ R ≤ 300mΩ 1mΩ ≤ R ≤ 100mΩ 1mΩ ≤ R ≤ 100mΩ	±75 ppm/°C ±100 ppm/°C
			2W					
		0815	1/2W					
			1W					
		0830	2W					
			3W					
PE	Metal Foil wide termination	0612	1W	-55°C to 170°C	(PxR)^1/2	±1%, ±2%, ±5%	1mΩ ≤ R ≤ 300mΩ 1mΩ ≤ R ≤ 100mΩ 1mΩ ≤ R ≤ 100mΩ	±75 ppm/°C ±100 ppm/°C
			2W					
		0815	1/2W					
			1W					
		0830	2W					
			3W					

Note: Please contact with sales offices, distributors and representatives in your region before ordering

Environmental characteristics				
Performance test		Test method	Procedure	Requirements
Life		MIL-STD-202G-method 108A	1 000 hours at 70 ±5°C applied RCWV 1.5 hours on, 0.5 hours off, still air required	±(1% +0.0005Ω)
High temperature exposure		MIL-STD-202G-method 108A	1 000 hours at maximum operating temperature depending on specification, unpowered	±(1% +0.0005Ω)
Moisture resistance		MIL-STD-202G-method 106F	Each temperature / humidity cycle is defined as 8 hours (method 106F), 3 cycles / 24 hours for 10d with 25°C / 65°C 95% R.H	±(0.5% +0.0005Ω)
Solderability	Wetting	J-STD-002B testB	Electrical test not required. Magnification 50X Lead-free solder bath at 245 ±3°C Dipping time: 3 ±0.5 seconds	Well tinned (≥95% covered)
	Resistance to soldering heat	MIL-STD-202G-method 210F	Lead-free solder, 260°C, 10 seconds immersion time	±(0.5% +0.0005Ω) No visible damage
Short time overload		MIL-R-55342D-para 4.7.5	5 times of rated power for 5 seconds at room temperature	±(0.5% +0.0005Ω) No visible damage

PE/PF - Current sensors - low T. C. R. chip resistors, wide termination, 0612 to 0830

Global part number - Preferred type

Ordering example: PF0815FKF070R01L

PF 0815 F K F 07 0R01 L

Series name (code 1-2)
PE /PF = current sensors - low T. C. R., wide termination

Size code (code 3-6)
(inch / metric)
0612 = 1.6 x 3.2
0815 = 2.15 x 3.75
0830 = 2.0 x 7.5

Tolerance (code 7)
F = ±1%
G = ±2%
J = ±5%

Packing style (code 8)
K = Embossed plastic tape reel

Default code(1/2) (code 17)
L / Z = Default code

Resistance (code 12-16)
0R01 = 0.01Ω
0R02 = 0.02Ω

Taping reel (code 10-11)
07 = 7 inch Dia. reel
7W = 7 inch Dia. reel
2 x standard power type

T. C. R. (code 9)
M = ±75 ppm/°C
F = ±100 ppm/°C

Note: 1. All of our RSMD products are RoHS compliant. "LFP" of the internal 2D reel label mentions "Lead Free Process"
2. PF series wide termination type products are available by "Global part number" only

Features

- Excellent T. C. R. compared to thick film low ohmic
- Precision current sensing control
- Excellent performance for current sensing applications
- Ultra-low resistance and narrow tolerance are suitable for current detection

Derating curve

Maximum dissipation (P) in percentage of rated power as a function of the operating ambient temperature (T_{amb}).

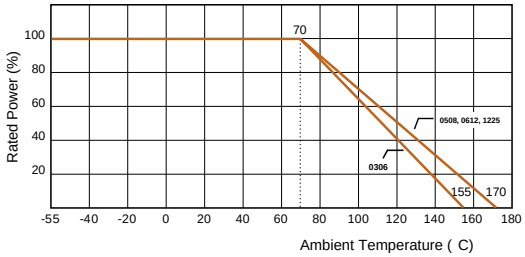

Construction

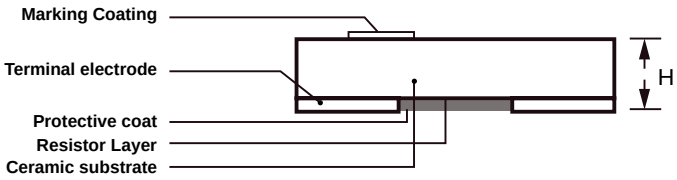

PS0306 / PS0508 / PS0612

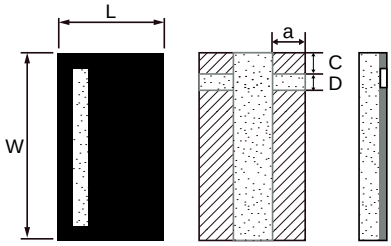

PS1225

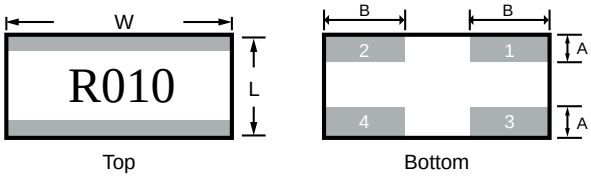

Dimensions

Type	L	W	a	D	c	H
PS0306	0.80±0.20	1.60±0.20	0.25±0.20	0.30±0.15	0.30±0.15	0.55±0.20
PS0508	1.25±0.20	2.00±0.20	0.25±0.20	0.20±0.15	0.30±0.20	0.55±0.20
PS0612	1.50±0.25	3.15±0.25	0.35±0.20	0.38±0.20	0.66±0.20	0.75±0.25

Type	L	W	A	B	H
PS1225	3.10±0.20	6.30±0.20	0.80±0.20	2.20±0.20	0.60±0.15

Note: Apply to ordering codes ending in "Z"
Please contact sales offices, distributors and representatives in your region before ordering

PS - Current sensors - low T.C.R. chip resistors, 4 termination, 0306 to 1225

Electrical characteristics							
Type	Technology	Size	Power P_{70}	Operating Temp. range	Max. working voltage	Tolerance	Resistance range & T. C. R.
PS	Metal Foil 4 termination	0306	1/8W	-55°C to 155°C	(PxR)^1/2	±1%, ±5%	10mΩ ≤ R ≤ 50mΩ ±75 ppm/°C ±100 ppm/°C
			1/4W				
		0508	1/8W	-55°C to 170°C			
			1/4W				
			1/2W				
		0612	1W	-55°C to 170°C			0.5mΩ, 0.75mΩ ±700 ppm/°C 1mΩ ≤ R ≤ 2mΩ ±400 ppm/°C 3mΩ ≤ R ≤ 5mΩ ±150 ppm/°C
		1225	3W	-55°C to 170°C			4mΩ ≤ R ≤ 50mΩ ±75 ppm/°C ±100 ppm/°C

Note: Please contact with sales offices, distributors and representatives in your region before ordering

Environmental characteristics				
Performance test		Test method	Procedure	Requirements
Life		MIL-STD-202G-method 108A	1 000 hours at 70 ±5°C applied RCWV 1.5 hours on, 0.5 hours off, still air required	±(1% +0.0005Ω)
High temperature exposure		MIL-STD-202G-method 108A	1 000 hours at maximum operating temperature depending on specification, unpowered	±(1% +0.0005Ω)
Moisture resistance		MIL-STD-202G-method 106F	Each temperature / humidity cycle is defined as 8 hours (method 106F), 3 cycles / 24 hours for 10d with 25°C / 65°C 95% R.H	±(0.5% +0.0005Ω)
Solderability	Wetting	J-STD-002B testB	Electrical test not required. Magnification 50X Lead-free solder bath at 245 ±3°C Dipping time: 3 ±0.5 seconds	Well tinned (≥95% covered)
	Resistance to soldering heat	MIL-STD-202G-method 210F	Lead-free solder, 260°C, 10 seconds immersion time	±(0.5% +0.0005Ω) No visible damage
Short time overload		MIL-R-55342D-para 4.7.5	5 times of rated power for 5 seconds at room temperature	±(0.5% +0.0005Ω) No visible damage

PS - Current sensors - low T.C.R. chip resistors, 4 termination, 0306 to 1225

Global part number - Preferred type

Ordering example: PS0612FKF070R01L

PS 0612 F K F 07 0R01 L

Series name (code 1-2)

PS = current sensors - low T.C.R., 4 termination

Size code (code 3-6)
(inch / metric)
0306 = 0.8 x 1.6
0508 = 1.25 x 2.0
0612 = 1.6 x 3.2
1225 = 3.2 x 6.35

Tolerance (code 7)
F = ±1%
J = ±5%

Packing style (code 8)
R = Paper tape reel
K = Embossed plastic tape reel

Default code(1/2) (code 17)
Z = Default code

Resistance (code 12-16)
0U5 = 0.0005Ω
0R01 = 0.01Ω
0R02 = 0.02Ω

Taping reel (code 10-11)
07 = 7 inch Dia. reel
7W = 7 inch Dia. reel
2 x standard power type
7T = 7 inch Dia. reel
3 x standard power type

T. C. R. (code 9)
M = ±75 ppm/°C
F = ±100 ppm/°C
L = ±150 ppm/°C
P = ±400 ppm/°C
Q = ±700 ppm/°C

Note: 1. All of our RSMD products are RoHS compliant. "LFP" of the internal 2D reel label mentions "Lead Free Process"
2. PS series 4 termination type products are available by "Global part number" only

Features

- New NiAu terminations provide special application for hybrid board gluing
- Competitive with AgPd terminations
- Special use in high temperature environment
- Higher component and equipment reliability

Derating curve

Maximum dissipation (P) in percentage of rated power as a function of the operating ambient temperature (T_{amb}).

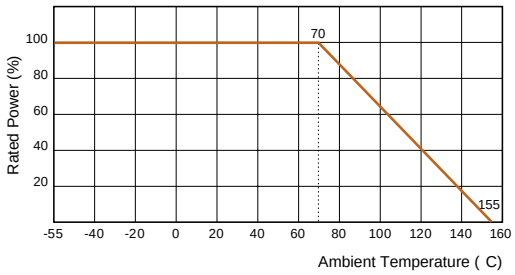

Construction

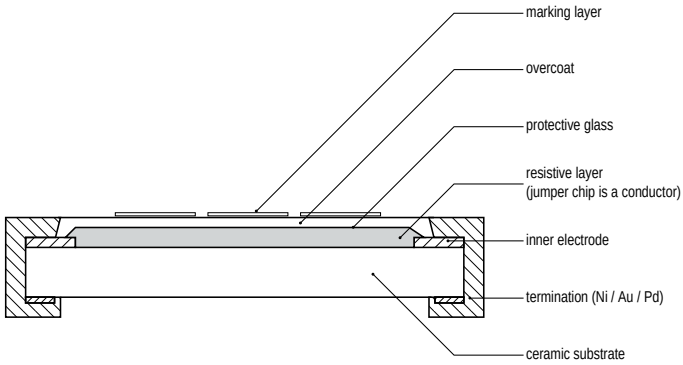

Dimensions

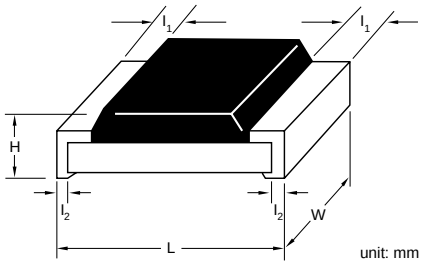

Type	L	W	H	l_1	l_2
AR0402	1.00 ±0.05	0.50 ±0.05	0.35 ±0.05	0.20 ±0.10	0.25 ±0.10
AR0603	1.60 ±0.10	0.80 ±0.10	0.45 ±0.10	0.25 ±0.15	0.25 ±0.15
AR0805	2.00 ±0.10	1.25 ±0.10	0.50 ±0.10	0.35 ±0.20	0.35 ±0.20
AR1206	3.10 ±0.10	1.60 ±0.10	0.55 ±0.10	0.45 ±0.20	0.40 ±0.20

AR - NiAu termination chip resistors, 0402 to 1206

Electrical characteristics								
Type	Power P_{70}	Operating Temp. range	MWV	RCOV	DWV	Resistance range & tolerance	T. C. R. (ppm/°C)	Jumper criteria (unit: A)
AR0402	1/16W	-55°C to +155°C	50V	100V	100V	E24 ±5% 1Ω ≤ R ≤ 10MΩ E24/E96 ±1% 1Ω ≤ R ≤ 10MΩ Jumper < 50MΩ	10Ω < R ≤ 10MΩ ±100 1Ω ≤ R ≤ 10Ω ±200	Rated current 1.0 Max. current 2.0
AR0603	1/10W	-55°C to +155°C	50V	100V	100V			Rated current 1.0 Max. current 2.0
AR0805	1/8W	-55°C to +155°C	150V	300V	300V			Rated current 2.0 Max. current 5.0
AR1206	1/4W	-55°C to +155°C	200V	500V	500V			Rated current 2.0 Max. current 10.0

Environmental characteristics				
Performance test		Test method	Procedure	Requirements
Life		MIL-STD-202G-method 108A	1 000 hours at 70 ±5°C applied RCWV 1.5 hours on, 0.5 hours off, still air required	±(2% +0.05Ω) < 100mΩ for jumper
High temperature exposure		MIL-STD-202G-method 108A	1 000 hours at maximum operating temperature depending on specification, unpowered	±(1% +0.05Ω) < 50mΩ for jumper
Moisture resistance		MIL-STD-202G-method 106F	Each temperature / humidity cycle is defined as 8 hours (method 106F), 3 cycles / 24 hours for 10d with 25°C / 65°C 95% R.H	±(2% +0.05Ω) < 100mΩ for jumper
Thermal shock		MIL-STD-202G-method 107G	LCT / UCT, number of cycles required is 300 Maximum transfer time is 20 seconds	±(0.5% +0.05Ω) for 10K to 10M ±(1% +0.05Ω) for others < 50mΩ for jumper
Solderability	Wetting	J-STD-002B testB	Electrical test not required. Magnification 50X Lead-free solder bath at 245 ±3°C Dipping time: 3 ±0.5 seconds	Well tinned (≥95% covered) No visible damage
	Resistance to soldering heat	MIL-STD-202G-method 210F	Lead-free solder, 260°C, 10 seconds immersion time	±(1% +0.05Ω) < 50mΩ for jumper No visible damage
Short time overload		MIL-R-55342D-para 4.7.5	2.5 times RCWV or maximum overload voltage whichever is less for 5 seconds at room temperature	±(2% +0.05Ω) < 50mΩ for jumper No visible damage

Global part number - Preferred type for ordering Yageo / Phycomp branded products

Ordering example: AR0603JR-07100KL

A R 0 6 0 3 J R — 0 7 1 0 0 K L

Series name (code 1-2)
AR = NiAu termination

Size code (code 3-6)
(inch / metric)
0402 = 1.0 x 0.5
0603 = 1.6 x 0.8
0805 = 2.0 x 1.25
1206 = 3.2 x 1.6

Tolerance (code 7)
F = ±1%
J = ±5% (for Jumper ordering)

Default code(1/2) (code 17)

Resistance (code 12-16)
0R = Jumper
10R = 10Ω
100R = 100Ω
100K = 100KΩ

Taping reel (code 10-11)
07 = 7 inch Dia. reel

T. C. R. (code 9)
"—" = Based on spec.
(— for thick film only)

Packing style (code 8)
R = Paper tape reel

Note: 1. All of our RSMD products are RoHS compliant. "LFP" of the internal 2D reel label mentions "Lead Free Process"
2. Letter L is system default code for ordering only

Phycomp worldwide - Traditional type

Chip resistors with Ni/Au terminations								
Size: inch (mm)	0402 (1005)		0603 (1608)		0805 (2012)		1206 (3216)	
Power	1/16 W		1/10 W		1/8 W		1/4 W	
Tolerance	+5%	+1%	+5%	+1%	+5%	+1%	+5%	+1%
Resistance	E24	E24 / E96	E24	E24 / E96	E24	E24 / E96	E24	E24 / E96
Packing	paper tape		paper tape		paper tape		paper tape	
Quantity 5 000	---	---	2322 702 11…L	2322 704 1….L	2322 730 11…	2322 734 1….L	2322 711 11...L	2322 729 1….L
10 000	2322 705 12…L	2322 706 2….	---	---	---	---	---	---
Jumper 5 000	---	---	2322 702 19001L	---	2322 730 19001L	---	2322 711 19001L	---
10 000	2322 705 19001 L	---	---	---	---	---	---	---

For ordering rules: See page 14 for E24 / E96 values and the last 4 or 3 digits of the 12NC catalogue number

Phycomp CTC ordering code - Traditional type - North America

Regional code for ordering Phycomp branded products. Please see page 13 for details.

SR - Surge chip resistors, 0402 to 2512

Features

- Reduced size of final equipment
- Low assembly costs
- Higher component and equipment reliability
- Excellent performance at pulse loading

Derating curve

Maximum dissipation (P) in percentage of rated power as a function of the operating ambient temperature (T_{amb}).

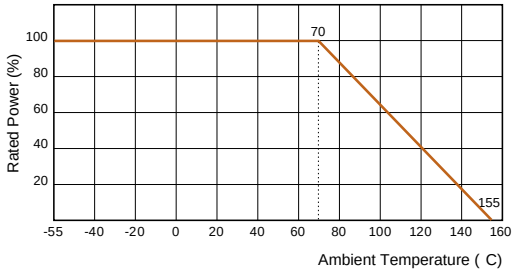

Construction

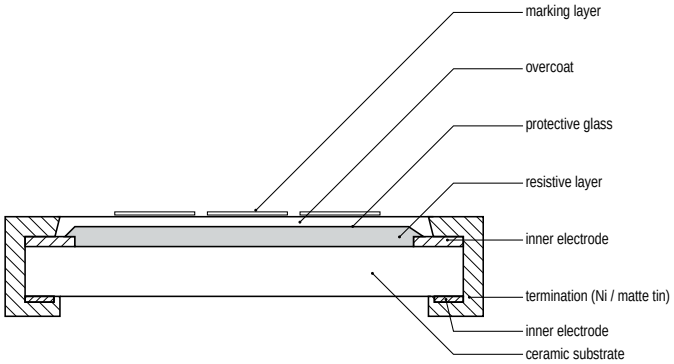

Dimensions

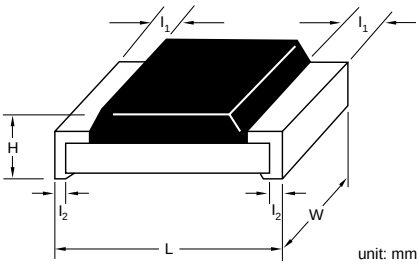

Type	L	W	H	l_1	l_2
SR0402	1.00±0.05	0.50±0.05	0.35±0.05	0.20±0.10	0.25±0.10
SR0603	1.60±0.10	0.80±0.10	0.45±0.10	0.25±0.15	0.25±0.15
SR0805	2.00 ±0.10	1.25 ±0.10	0.50 ±0.10	0.35 ±0.20	0.35 ±0.20
SR1206	3.10 ±0.10	1.60 ±0.10	0.55 ±0.10	0.45 ±0.20	0.40 ±0.20
SR1218	3.10 ±0.10	4.60 ±0.10	0.55 ±0.10	0.45 ±0.20	0.40 ±0.20
SR2010	5.00 ±0.10	2.50 ±0.15	0.55 ±0.10	0.55 ±0.15	0.50 ±0.20
SR2512	6.35 ±0.10	3.10 ±0.15	0.55 ±0.10	0.60 ±0.20	0.50 ±0.20

SR - Surge chip resistors, 0402 to 2512

Electrical characteristics

Type	Power P_{70}	Operating Temp. range	MWV	RCOV	DWV	Resistance range & tolerance		T. C. R.
SR0402	1/16W	-55°C to +155°C	50V	100V	100V	E24 ±5%, ±10%, ±20%	1Ω ≤ R ≤ 100KΩ	±200 ppm/°C
	1/8W	-55°C to +155°C	50V	100V	100V			
SR0603	1/10W	-55°C to +155°C	50V	100V	100V			
	1/5W	-55°C to +155°C	50V	100V	100V			
SR0805	1/8W	-55°C to +155°C	150V	300V	300V			
	1/4W	-55°C to +155°C	150V	300V	300V			
SR1206	1/4W	-55°C to +155°C	200V	400V	500V			
	1/2W	-55°C to +155°C	200V	400V	500V			
SR1218	1W	-55°C to +155°C	200V	400V	500V			
SR2010	3/4W	-55°C to +155°C	200V	400V	500V			
SR2512	1W	-55°C to +155°C	200V	400V	500V			

Environmental characteristics

Performance test		Test method	Procedure	Requirements
Life		MIL-STD-202G-method 108A	1 000 hours at 70 ±5°C applied RCWV 1.5 hours on, 0.5 hours off, still air required	±(3% +0.05Ω)
High temperature exposure		MIL-STD-202G-method 108A	1 000 hours at maximum operating temperature depending on specification, unpowered	±(3% +0.05Ω)
Solder-ability	Wetting	J-STD-002B testB	Electrical test not required. Magnification 50X Lead-free solder bath at 245 ±3°C Dipping time: 3 ±0.5 seconds	Well tinned (≥95% covered) No visible damage
	Resistance to soldering heat	MIL-STD-202G-method 210F	Lead-free solder, 260°C, 10 seconds immersion time	±(1% +0.05Ω) No visible damage
Short time overload		MIL-R-55342D-para 4.7.5	2.5 times RCWV or maximum overload voltage which-ever is less for 5 seconds at room temperature	±(2% +0.05Ω) No visible damage

Pulse-Load behavior

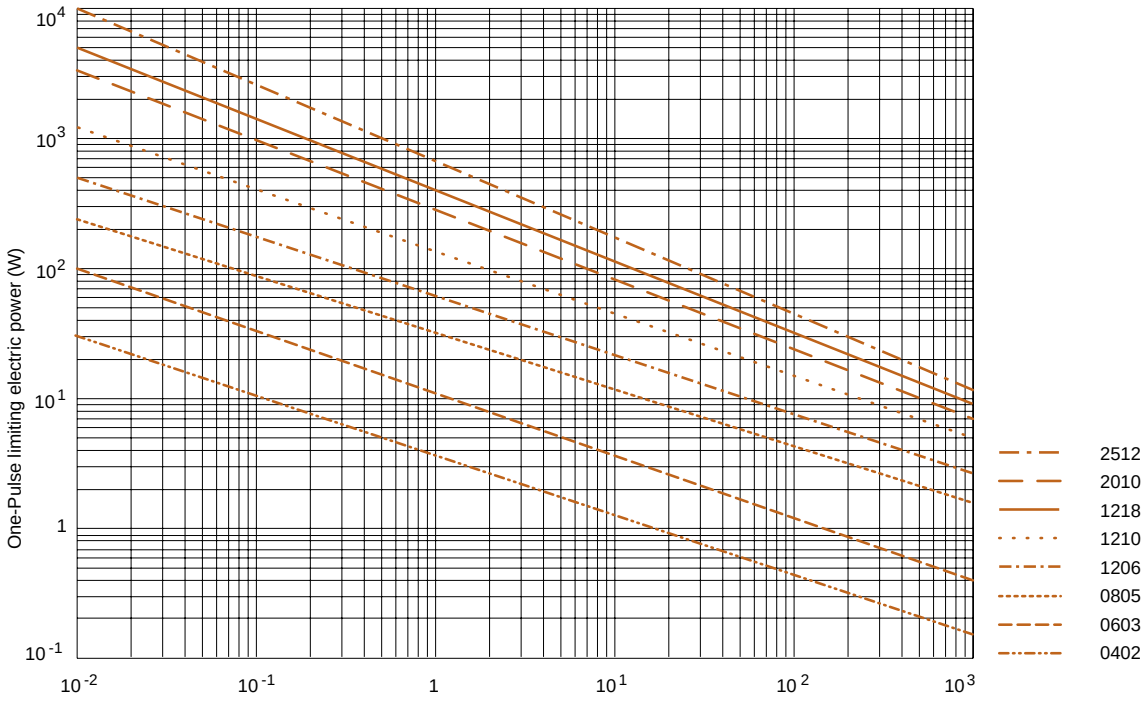

SR - Surge chip resistors, 0402 to 2512

Global part number - Preferred type for ordering Yageo / Phycomp branded products

Ordering example: SR0805MR-07100KL

SR 0805 M R — 07 100K L

Series name (code 1-2)
SR = Surge

Size code (code 3-6)
(inch / metric)
0402 = 1.0 x 0.5
0603 = 1.6 x 0.8
0805 = 2.0 x 1.25
1206 = 3.2 x 1.6
1218 = 3.2 x 4.5
2010 = 5.0 x 2.5
2512 = 6.35 x 3.2

Tolerance (code 7)
J = ±5%
K=±10%
M = ±20%

Default code(1/2) (code 17)

Resistance (code 12-16)
10R = 10Ω
100K = 100KΩ

Taping reel (code 10-11)
7W = 7 inch Dia. reel
2 x standard power type
07 = 7 inch Dia. reel
10 = 10 inch Dia. reel
13 = 13 inch Dia. reel

T. C. R. (code 9)
"—" = Based on spec.
(— for thick film only)

Packing style (code 8)
R = Paper tape reel
K = Embossed plastic tape reel

Note: 1. All of our RSMD products are RoHS compliant. "LFP" of the internal 2D reel label mentions "Lead Free Process"
2. Letter L is system default code for ordering only

Phycomp worldwide - Traditional type

Surge chip resistors						
Size: inch (mm)	0805 (2012)	1206 (3216)	1218 (3248)	2512 (6432)		
Power	1/8 W	1/4 W	1 W	1 W		
Tolerance	+10%	+5%	+10%	+5%	+10%	+20%
Resistance	E24	E24	E24	E24	E24	E24
Packing	paper tape	paper tape	paper tape	paper tape	paper tape	paper tape
Quantity 4 000	---	---	2350 557 10…L	2350 556 11…L	2350 556 10…L	2350 556 13…L
Quantity 5 000	2350 554 12…L	2350 550 10…L	---	---	---	---

For ordering rules: See page 14 for E24 / E96 values and the last 4 or 3 digits of the 12NC catalogue number

Phycomp CTC ordering code - Traditional type - North America

Regional code for ordering Phycomp branded products. Please see page 15 for details.

Features

- Higher maximum working voltage compared to RC series
- Extremely thin and light
- Reliable electrode construction
- Compatible with lead containing and lead-free soldering processes
- Highly stable in auto-placement surface mounting

Derating curve

Maximum dissipation (P) in percentage of rated power as a function of the operating ambient temperature (T_{amb}).

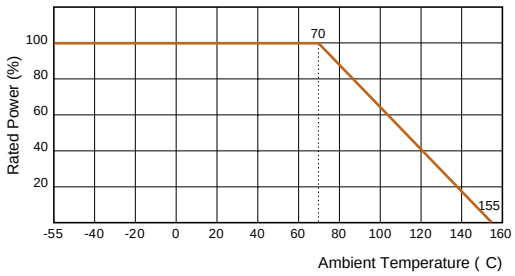

Construction

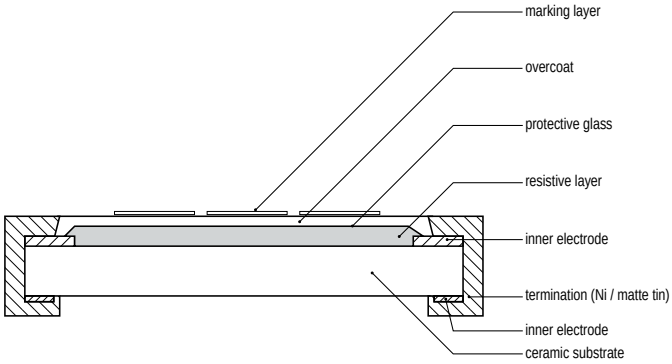

Dimensions

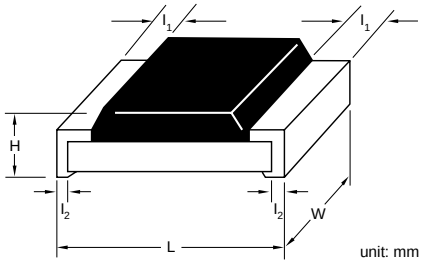

Type	L	W	H	l_1	l_2
RV0603	1.60 ±0.10	0.80 ±0.10	0.45 ±0.10	0.25 ±0.15	0.25 ±0.15
RV0805	2.00 ±0.10	1.25 ±0.10	0.50 ±0.10	0.35 ±0.20	0.35 ±0.20
RV1206	3.10 ±0.10	1.60 ±0.10	0.55 ±0.10	0.40 ±0.20	0.45 ±0.20
RV2512	6.35 ±0.10	3.10 ±0.15	0.55 ±0.10	0.60 ±0.20	0.50 ±0.20

RV - High voltage chip resistors, 0603 to 2512

Electrical characteristics							
Type	Power P_{70}	Operating Temp. range	MWV	RCOV	DWV	Resistance range & tolerance	T. C. R.
RV0603	1/10W	-55°C to +155°C	350V	500V	500V	E24 ±5% E24/E96 ±1% 10KΩ ≤ R ≤ 1MΩ	±200 ppm/°C
RV0805	1/8W	-55°C to +155°C	400V	800V	800V	E24 ±5% E24/E96 ±1% 100KΩ ≤ R ≤ 10MΩ	
RV1206	1/4W	-55°C to +155°C	500V	1000V	1000V	E24 ±5% 100KΩ ≤ R ≤ 27MΩ E24/E96 ±1% 100KΩ ≤ R ≤ 10MΩ	
RV2512	1W	-55°C to +155°C	500V	1000V	1000V	E24 ±5% 4.7MΩ ≤ R ≤ 16MΩ	

Environmental characteristics				
Performance test		Test method	Procedure	Requirements
Life		MIL-STD-202G-method 108A	1 000 hours at 70 ±5°C applied RCWV 1.5 hours on, 0.5 hours off, still air required	±(2% +0.05Ω)
High temperature exposure		MIL-STD-202G-method 108A	1 000 hours at maximum operating temperature depending on specification, unpowered	±(1% +0.05Ω)
Moisture resistance		MIL-STD-202G-method 106F	Each temperature / humidity cycle is defined as 8 hours (method 106F), 3 cycles / 24 hours for 10d with 25°C / 65°C 95% R.H	±(2% +0.05Ω)
Thermal shock		MIL-STD-202G-method 107G	LCT / UCT, number of cycles required is 300 Maximum transfer time is 20 seconds	±(0.5% +0.05Ω) for 10K to 10M ±(1% +0.05Ω) for others
Solderability	Wetting	J-STD-002B testB	Electrical test not required. Magnification 50X Lead-free solder bath at 245 ±3°C Dipping time: 3 ±0.5 seconds	Well tinned (≥95% covered) No visible damage
	Resistance to soldering heat	MIL-STD-202G-method 210F	Lead-free solder, 260°C, 10 seconds immersion time	±(1% +0.05Ω) No visible damage
Short time overload		MIL-R-55342D-para 4.7.5	2.5 times RCWV or maximum overload voltage whichever is less for 5 seconds at room temperature	±(2% +0.05Ω) No visible damage

Global part number - Preferred type for ordering Yageo / Phycomp branded products

Ordering example: RV0805JR-07100KL

R V 0 8 0 5 J R — 0 7 1 0 0 K L

Series name (code 1-2)
RV = High voltage

Size code (code 3-6)
(inch / metric)
0603 = 1.6 x 0.8
0805 = 2.0 x 1.25
1206 = 3.2 x 1.6
2512 = 6.35 x 3.2

Tolerance (code 7)
F = ±1%
J = ±5%

Default code(1/2) (code 17)

Resistance (code 12-16)
100K = 100KΩ
1M = 1MΩ

Taping reel (code 10-11)
07 = 7 inch Dia. reel

T. C. R. (code 9)
"—" = Based on spec.
(— for thick film only)

Packing style (code 8)
R = Paper tape reel
K = Embossed plastic tape reel

Note: 1. All of our RSMD products are RoHS compliant. "LFP" of the internal 2D reel label mentions "Lead Free Process"
2. Letter L is system default code for ordering only

Phycomp worldwide - Traditional type

High voltage chip resistors					
Size: inch (mm)	0805 (2012)		1206 (3216)		2512 (6432)
Power	1/8 W		1/4 W		1 W
Tolerance	+5%	+1%	+5%	+1%	+5%
Resistance	E24	E24 / E96	E24	E24 / E96	E24
Packing	paper tape		paper tape		blister tape
Quantity 4 000	---	---	---	---	2322 762 98...L
Quantity 5 000	2322 792 61...L	2322 793 6....L	2322 790 61...L	2322 791 6....L	---

For ordering rules: See page 14 for E24 / E96 values and the last 4 or 3 digits of the 12NC catalogue number

Phycomp CTC ordering code - Traditional type - North America

Regional code for ordering Phycomp branded products. Please see page 15 for details.

TR - Trimmable chip resistors, 0402 to 1206

Features

- Reduced size of final equipment
- Low assembly costs
- Higher component and equipment reliability
- Improved performance at high frequency
- Low noise, when not trimmed

Derating curve

Maximum dissipation (P) in percentage of rated power as a function of the operating ambient temperature (T_{amb}).

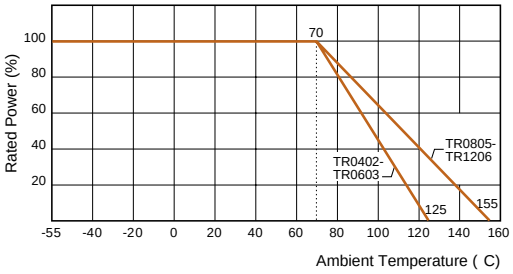

Construction

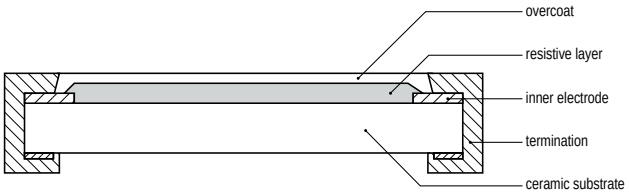

Dimensions

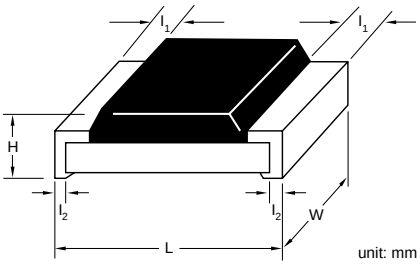

Type	L	W	H	l_1	l_2
TR0402	1.00 ±0.10	0.50 ±0.05	0.35 ±0.05	0.20 ±0.10	0.25 ±0.10
TR0603	1.60 ±0.10	0.80 ±0.10	0.45 ±0.10	0.25 ±0.15	0.25 ±0.15
TR0805	2.00 ±0.10	1.25 ±0.10	0.50 ±0.10	0.35 ±0.20	0.35 ±0.20
TR1206	3.10 ±0.10	1.60 ±0.10	0.55 ±0.10	0.45 ±0.20	0.40 ±0.20

TR - Trimmable chip resistors, 0402 to 1206

Electrical characteristics							
Type	Power P_{70}	Operating Temp. range	MWV	RCOV	DWV	Resistance range & tolerance	T. C. R. (ppm/°C)
TR0402	1/16W	-55°C to +125°C	50V	100V	100V	E24 +0/-10%, +0/-20%, +0/-30% 1Ω ≤ R ≤ 10MΩ	1Ω ≤ R ≤ 10Ω ±200 10Ω < R ≤ 1MΩ ±100 1MΩ < R ≤ 10MΩ ±200
TR0603	1/16W	-55°C to +125°C	50V	100V	100V		
TR0805	1/8W	-55°C to +155°C	150V	300V	500V		
TR1206	1/4W	-55°C to +155°C	200V	500V	500V		

Environmental characteristics				
Performance test		Test method	Procedure	Requirements
Life		MIL-STD-202G-method 108A	1 000 hours at 70 ±5°C applied RCWV 1.5 hours on, 0.5 hours off, still air required	±(1% +0.05Ω)
High temperature exposure		MIL-STD-202G-method 108A	1 000 hours at maximum operating temperature depending on specification, unpowered	±(1% +0.05Ω)
Moisture resistance		MIL-STD-202G-method 106F	Each temperature / humidity cycle is defined as 8 hours (method 106F), 3 cycles / 24 hours for 10d with 25°C / 65°C 95% R.H	±(2% +0.05Ω)
Thermal shock		MIL-STD-202G-method 107G	LCT / UCT, number of cycles required is 300 Maximum transfer time is 20 seconds	±(1% +0.05Ω)
Solder-ability	Wetting	J-STD-002B testB	Electrical test not required. Magnification 50X Lead-free solder bath at 245 ±3°C Dipping time: 3 ±0.5 seconds	Well tinned (≥95% covered) No visible damage
	Resistance to soldering heat	MIL-STD-202G-method 210F	Lead-free solder, 260°C, 10 seconds immersion time	±(1% +0.05Ω) No visible damage
Short time overload		MIL-R-55342D-para 4.7.5	2.5 times RCWV or maximum overload voltage whichever is less for 5 seconds at room temperature	±(1% +0.05Ω) No visible damage

TR - Trimmable chip resistors, 0402 to 1206

Global part number - Preferred type for ordering Yageo / Phycomp branded products

Ordering example: TR0603MR-07100KL

TR 0603 M R — 07 100K L

Series name (code 1-2)
TR = Trimmable

Size code (code 3-6)
(inch / metric)
0402 = 1.0 x 0.5
0603 = 1.6 x 0.8
0805 = 2.0 x 1.25
1206 = 3.2 x 1.6

Tolerance (code 7)
K = 0/-10%
M = 0/-20%
N = 0/-30%

Default code(1/2) (code 17)

Resistance (code 12-16)
10R = 10Ω
100R = 100Ω
100K = 100KΩ

Taping reel (code 10-11)
07 = 7 inch Dia. reel

T. C. R. (code 9)
"—" = Based on spec.
(— for thick film only)

Packing style (code 8)
R = Paper tape reel

Note: 1. All of our RSMD products are RoHS compliant. "LFP" of the internal 2D reel label mentions "Lead Free Process"
2. Letter L is system default code for ordering only

Phycomp worldwide - Traditional type

Trimmable chip resistors				
Size: inch (mm)	0402 (1005)	0603 (1608)	0805 (2012)	1206 (3216)
Power	1/16 W	1/10 W	1/8 W	1/4 W
Tolerance	E24	E24	E24	E24
Resistance	paper tape	paper tape	paper tape	paper tape
Packing	2350 503 21…L	2350 502 11…L	2350 501 11…L	2350 500 11…L
Quantity 5 000 0/-20%	2350 503 20…L	2350 502 10…L	2350 511 10…L	2350 500 10…L
5 000 0/-30%	on request	on request	on request	2322 724 94…L
Europe 5 000	2322 792 61...L	2322 793 6....L	2322 791 6....L	---

For ordering rules: See page 14 for E24 / E96 values and the last 4 or 3 digits of the 12NC catalogue number

Phycomp CTC ordering code - Traditional type - North America

Regional code for ordering Phycomp branded products. Please see page 15 for details.

AF - Sulfur resistant chip resistors, 0201 to 2512

Features

- Superior resistance against sulfur containing atmosphere
- Hightly reliable multilayer electrode construction
- Compatible with all soldering processes
- Highly stable in auto-placement surface mounting applications
- Barrier layer end termination
- Halogen free product and production

Derating curve

Maximum dissipation (P) in percentage of rated power as a function of the operating ambient temperature (T_{amb}).

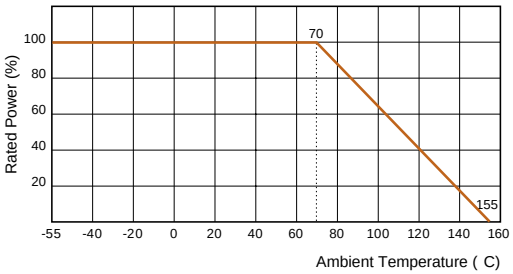

Construction

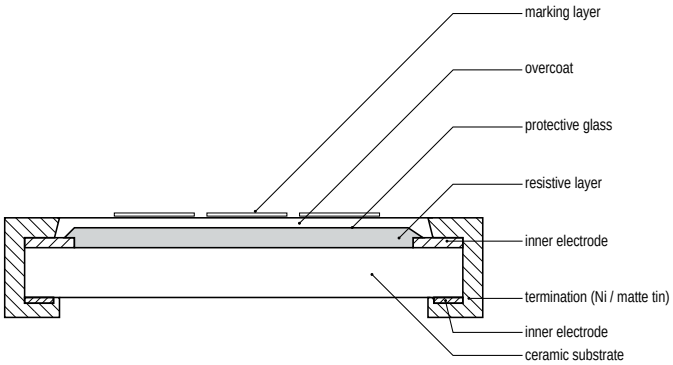

Dimensions

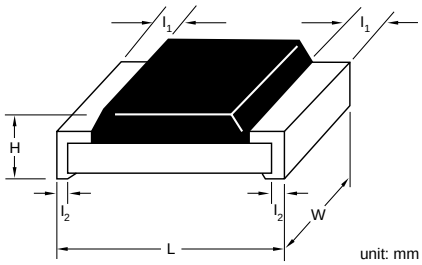

Type	L	W	H	l_1	l_2
AF0201	0.60±0.03	0.30±0.03	0.23 ±0.03	0.10±0.05	0.15±0.05
AF0402	1.00 ±0.05	0.50 ±0.05	0.32 ±0.05	0.20 ±0.10	0.25 ±0.10
AF0603	1.60 ±0.10	0.80 ±0.10	0.45 ±0.10	0.25 ±0.15	0.25 ±0.15
AF0805	2.00 ±0.10	1.25 ±0.10	0.50 ±0.10	0.35 ±0.20	0.35 ±0.20
AF1206	3.10 ±0.10	1.60 ±0.10	0.55 ±0.10	0.45 ±0.20	0.40 ±0.20
AF1210	3.10±0.10	2.60±0.15	0.50 ±0.10	0.45±0.15	0.50±0.20
AF1218	3.10±0.10	4.60±0.10	0.55 ±0.10	0.45±0.20	0.40±0.20
AF2010	5.00±0.10	2.50±0.15	0.55±0.10	0.55±0.15	0.50±0.20
AF2512	6.35±0.10	3.10±0.15	0.55±0.10	0.60±0.20	0.50±0.20

AF - Sulfur resistant chip resistors, 0201 to 2512

Electrical characteristics								
Type	Power P_{70}	Operating Temp. range	MWV	RCOV	DWV	Resistance range & tolerance	T. C. R. (ppm/°C)	Jumper criteria (unit: A)
AF0201	1/20W	-55°C to +125°C	25V	50V	50V	E24 ±5% 1Ω ≤ R ≤ 10MΩ E24/E96 ±1% 1Ω ≤ R ≤ 10MΩ Jumper < 50mΩ	1Ω ≤ R ≤ 10Ω -100/+350 10Ω < R ≤ 10MΩ ±200	Rated current 0.5 Max. current 1.0
AF0402	1/16W	-55°C to +155°C	50V	100V	100V	E24 ±5% 1Ω ≤ R ≤ 22MΩ E24/E96 ±1% 1Ω ≤ R ≤ 10MΩ Jumper < 50mΩ	1Ω ≤ R ≤ 10Ω ±200 10Ω < R ≤ 10MΩ ±100 10MΩ < R ≤ 22MΩ ±200	Rated current 1.0 Max. current 2.0
AF0603	1/10W	-55°C to +155°C	50V	100V	100V			Rated current 1.0 Max. current 2.0
AF0805	1/8W	-55°C to +155°C	150V	300V	300V			Rated current 2.0 Max. current 5.0
AF1206	1/4W	-55°C to +155°C	200V	400V	500V			Rated current 2.0 Max. current 10.0
AF1210	1/2W	-55°C to +155°C	200V	500V	500V	E24 ±5% 1Ω ≤ R ≤ 10MΩ E24/E96 ±1% 1Ω ≤ R ≤ 10MΩ Jumper < 50mΩ	1Ω ≤ R ≤ 10Ω ±200 10Ω < R ≤ 10MΩ ±100	Rated current 2.0 Max. current 10.0
AF1218	1W	-55°C to +155°C	200V	500V	500V			Rated current 2.0 Max. current 10.0
AF2010	3/4W	-55°C to +155°C	200V	500V	500V			Rated current 2.0 Max. current 10.0
AF2512	1W	-55°C to +155°C	200V	500V	500V			Rated current 2.0 Max. current 10.0

Environmental characteristics				
Performance test		Test method	Procedure	Requirements
Life		MIL-STD-202G-method 108A	1 000 hours at 70 ±5°C applied RCWV 1.5 hours on, 0.5 hours off, still air required	±(1% +0.05Ω) < 100mΩ for jumper
High temperature exposure		MIL-STD-202G-method 108A	1 000 hours at maximum operating temperature depending on specification, unpowered	±(1% +0.05Ω) < 100mΩ for jumper
Moisture resistance		MIL-STD-202G-method 106F	Each temperature / humidity cycle is defined as 8 hours (method 106F), 3 cycles / 24 hours for 10d with 25°C / 65°C 95% R.H	±(0.5% +0.05Ω) for 1% tol. ±(1% +0.05Ω) for 5% tol. < 100mΩ for jumper
Thermal shock		MIL-STD-202G-method 107G	LCT / UCT, number of cycles required is 300 Maximum transfer time is 20 seconds	±(0.5% +0.05Ω) for 1% tol. ±(1% +0.05Ω) for 5% tol. < 100mΩ for jumper
Solderability	Wetting	J-STD-002B testB	Electrical test not required. Magnification 50X Lead-free solder bath at 245 ±3°C Dipping time: 3 ±0.5 seconds	Well tinned (≥95% covered) No visible damage
	Resistance to soldering heat	MIL-STD-202G-method 210F	Lead-free solder, 260°C, 10 seconds immersion time	±(1% +0.05Ω) No visible damage
Short time overload		MIL-R-55342D-para 4.7.5	2.5 times RCWV or maximum overload voltage which-ever is less for 5 seconds at room temperature	±(1% +0.05Ω) No visible damage
Anti-FOS		ASTM-B-809-95	Sulfur (saturated vapor) 1000 hours, 60±2°C, 91~93 %RH, Rating with no power	±(1% +0.05Ω)

AF - Sulfur resistant chip resistors, 0201 to 2512

Global part number - Preferred type

Ordering example: AF0603JR-07100KL

AF 0603 J R — 07 100K L

Series name (code 1-2)
AF = Anti-sulfurated

Size code (code 3-6)
(inch / metric)
0201 = 0.6 x 0.3
0402 = 1.0 x 0.5
0603 = 1.6 x 0.8
0805 = 2.0 x 1.25
1206 = 3.2 x 1.6
1210 = 3.2 x 1.6
1218 = 3.2 x 2.6
2010 = 5.0 x 2.5
2512 = 6.35 x 3.2

Tolerance (code 7)
F = ±1%
J = ±5% (for Jumper ordering)

Packing style (code 8)
R = Paper tape reel
K = Embossed plastic tape reel

Default code(1/2) (code 17)

Resistance (code 12-16)
0R = Jumper
10R = 10Ω
100R = 100Ω
100K = 100KΩ

Taping reel (code 10-11)
07 = 7 inch Dia. reel
10 = 10 inch Dia. reel
13 = 13 inch Dia. reel

T. C. R. (code 9)
"—" = Based on spec.
(— for thick film only)

Note: 1. All our RSMD products meet RoHS Compliant. "LFP" of the internal 2D reel label mentions "Lead Free Process"
2. Letter L is system default code for order only
3. AF series products are available by "Global part number" only

Features

- Superior resistance against sulfur containing atmosphere
- Highly reliable multilayer electrode construction
- Compatible with all soldering processes
- Highly stable in auto-placement surface mounting applications
- Barrier layer end termination
- Halogen free product and production

Schematics

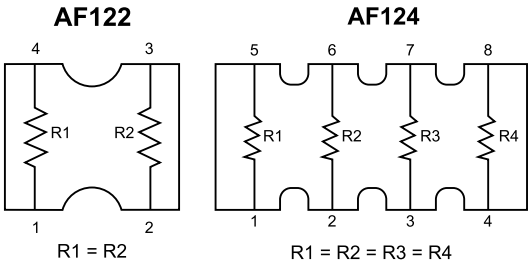

Dimensions

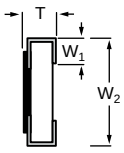

Side view for all types

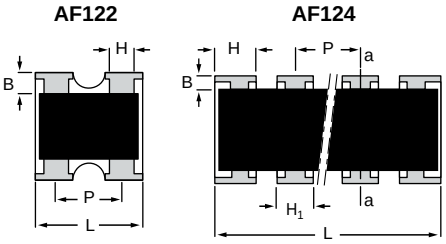

Type	H / H1	B	P	L	T	W1	W2
AF122	0.30 +0.10/-0.05	0.24 ± 0.10	0.67 ± 0.05	1.00 ± 0.10	0.30 ±0.10	0.25 ± 0.10	1.00 ± 0.10
AF124	H : 0.45 ± 0.05 H1 : 0.30 ± 0.05	0.20 ± 0.15	0.50 ± 0.05	2.00 ± 0.10	0.45 ± 0.10	0.30 ± 0.15	1.00 ± 0.10

Electrical characteristics								
Type	Power rating	Operating Temp. range	MWV	RCOV	DWV	Resistance range & tolerance	T. C. R.	Jumper criteria (unit: A)
AF122	1/16W	-55°C to +125°C	50V	100V	100V	E24 ±5% 1Ω ≤ R ≤ 1MΩ E24/E96 ±1% 1Ω ≤ R ≤ 1MΩ Jumper < 50mΩ	1Ω ≤ R < 10Ω ±250ppm/°C 10Ω < R < 1MΩ ±200ppm/°C	Rated current 0.5A Max. current 1.0A
AF124	1/16W	-55°C to +155°C	25V	50V	100V			Rated current 1.0A Max. current 2.0A

Environmental characteristics				
Performance test		Test method	Procedure	Requirements
Life		MIL-STD-202G-method 108A	1 000 hours at 70 ±5°C applied RCWV 1.5 hours on, 0.5 hours off, still air required	±(2% +0.05Ω) < 100mΩ for jumper
High temperature exposure		MIL-STD-202G-method 108A	1 000 hours at maximum operating temperature depending on specification, unpowered	±(1% +0.05Ω) < 50mΩ for jumper
Moisture resistance		MIL-STD-202G-method 106F	Each temperature / humidity cycle is defined as 8 hours (method 106F), 3 cycles / 24 hours for 10d with 25°C / 65°C 95% R.H	±(2% +0.05Ω) < 50mΩ for jumper
Thermal shock		MIL-STD-202G-method 107G	LCT / UCT, number of cycles required is 300 Maximum transfer time is 20 seconds	±(0.5% +0.05Ω) for 10K to 10M ±(1% +0.05Ω) for others < 50mΩ for jumper
Solderability	Wetting	J-STD-002B testB	Electrical test not required. Magnification 50X Lead-free solder bath at 245 ±3°C Dipping time: 3 ±0.5 seconds	Well tinned (≥95% covered)
	Resistance to soldering heat	MIL-STD-202G-method 210F	Lead-free solder, 260°C, 10 seconds immersion time	±(1% +0.05Ω) < 50mΩ for jumper No visible damage
Short time overload		MIL-R-55342D-para 4.7.5	2.5 times RCWV or maximum overload voltage which-ever is less for 5 seconds at room temperature	±(2% +0.05Ω) < 50mΩ for jumper No visible damage
Anti-FOS		ASTM-B-809-95	Sulfur (saturated vapor) 1000 hours, 60±2°C, 91~93 %RH, Rating with no power	±(1% +0.05Ω)

AF - Sulfur resistant chip resistors, Arrays

Global part number - Array

Ordering example: AF122-JR-07100KL

A F 12 2 — J R — 0 7 1 0 0 K L

Series name (code 1-2)
AF = Array (convex) thick film

Size code (inch) (code 3-4)

12 = 0402 x 2 (0404)
0402 x 4 (0408)

Number of resistor (code 5)
2 = 2 resistors
4 = 4 resistors

Schematic (code 6)
"—" = Based on spec.

Default code (code 17)

Resistance (code 12-16)
0R = Jumper
10R = 10Ω
100R = 100Ω
100K = 100KΩ

Taping reel (code 10-11)
07 = 7 inch Dia. reel
10 = 10 inch Dia. reel
13 = 13 inch Dia. reel

T. C. R. (code 9)
"—" = Based on spec.

Packing style (code 8)
R = Paper tape reel

Tolerance (code 7)
F = ± 1%
J = ± 5% (for jumper ordering)

Note: 1. All our RSMD products meet RoHS Compliant. "LFP" of the internal 2D reel label mentions "Lead Free Process"
2. Letter L is system default code for order only

Features

- AEC-Q200 qualified
- Production part approval process (PPAP) support
- High reliability
- High quality level

Derating curve

Maximum dissipation (P) in percentage of rated power as a function of the operating ambient temperature (T_{amb}).

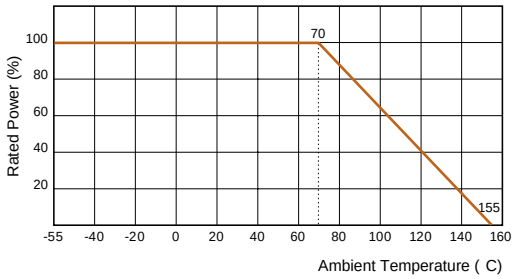

Construction

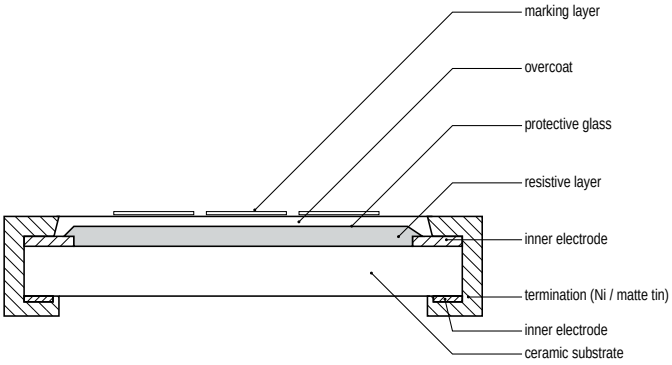

Dimensions

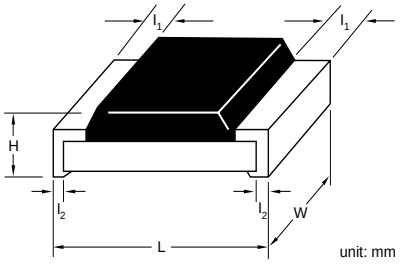

Type	L	W	H	l_1	l_2
AC0402	1.00 ±0.05	0.50 ±0.05	0.32 ±0.05	0.20 ±0.10	0.25 ±0.10
AC0603	1.60 ±0.10	0.80 ±0.10	0.45 ±0.10	0.25 ±0.15	0.25 ±0.15
AC0805	2.00 ±0.10	1.25 ±0.10	0.50 ±0.10	0.35 ±0.20	0.35 ±0.20
AC1206	3.10 ±0.10	1.60 ±0.10	0.55 ±0.10	0.45 ±0.20	0.40 ±0.20
AC1210	3.10 ±0.10	2.60 ±0.15	0.50 ±0.10	0.45 ±0.15	0.50 ±0.20
AC1218	3.10 ±0.10	4.60 ±0.10	0.55 ±0.10	0.45 ±0.20	0.40 ±0.20
AC2010	5.00 ±0.10	2.50 ±0.15	0.55 ±0.10	0.55 ±0.15	0.50 ±0.20
AC2512	6.35 ±0.10	3.10 ±0.15	0.55 ±0.10	0.60 ±0.20	0.50 ±0.20

AC - Automotive grade chip resistors, 0402 to 2512

Electrical characteristics								
Type	Power P_{70}	Operating Temp. range	MWV	RCOV	DWV	Resistance range & tolerance	T. C. R. (ppm/°C)	Jumper criteria (unit: A)
AC0402	1/16W	-55°C to +155°C	50V	100V	100V	E24 ±5% 1Ω ≤ R ≤ 10MΩ E24/E96 ±0.5%, ±1% 1Ω ≤ R ≤ 10MΩ Jumper < 0.05Ω	1Ω ≤ R ≤ 10Ω ±200 10Ω < R ≤ 10 MΩ ±100	Rated current 1.0 Max. current 2.0
AC0603	1/10W	-55°C to +155°C	50V	100V	100V			Rated current 1.0 Max. current 2.0
AC0805	1/8W	-55°C to +155°C	150V	300V	300V			Rated current 2.0 Max. current 5.0
AC1206	1/4W	-55°C to +155°C	200V	400V	500V			Rated current 2.0 Max. current 10.0
AC1210	1/2W	-55°C to +155°C	200V	500V	500V			Rated current 2.0 Max. current 10.0
AC1218	1W	-55°C to +155°C	200V	500V	500V			Rated current 6.0 Max. current 10.0
AC2010	3/4W	-55°C to +155°C	200V	500V	500V			Rated current 2.0 Max. current 10.0
AC2512	1W	-55°C to +155°C	200V	500V	500V			Rated current 2.0 Max. current 10.0

Environmental characteristics				
Performance test		Test method	Procedure	Requirements
Life		AEC-Q200-REV C-Test 8 MIL-STD-202 Method 108	1 000 hours at 125°C applied RCWV 1.5 hours on, 0.5 hours off	±(1% +0.05Ω) < 100mΩ for jumper
High temperature exposure		AEC-Q200-REV C-Test 3 MIL-STD-202 Method 108	1 000 hours at maximum operating temperature depending on specification	±(1% +0.05Ω) < 50mΩ for jumper
Moisture resistance		AEC-Q200-REV C-Test 6 MIL-STD-202 Method 106	Each temperature / humidity cycle is defined as 8 hours (method 106F), 3 cycles / 24 hours for 10d with 25°C / 65°C 95% R.H.	±(0.5% +0.05Ω) for 1% tol. ±(2% +0.05Ω) for 5% tol. < 100mΩ for jumper
Biased humidity		AEC-Q200-REV C-Test 7 MIL-STD-202 Method 103	1 000 hours; + 85°C 85% R.H.; 10% of operating power Measured at 24 ±2 hours after test	±(1% +0.05Ω) < 100mΩ for jumper
Thermal shock		AEC-Q200-REV C-Test 16 MIL-STD-202 Method 107	LCT / UCT, number of cycles required is 300 Maximum transfer time is 20 seconds	±(1% +0.05Ω) < 50mΩ for jumper
Solderability	Wetting	AEC-Q200-REV C-Test 18 J-STD-002B testB	Electrical test not required. Magnification 50X Lead-free solder bath at 245 ±3°C Dipping time: 3 ±0.5 seconds	Well tinned (≥95% covered) No visible damage
	Resistance to soldering heat	AEC-Q200-REV C-Test 15 MIL-STD-202 Method 215	Lead-free solder, 260°C, 10 seconds immersion time	±(1% +0.05Ω) < 50mΩ for jumper No visible damage
Short time overload		MIL-R-55342D- para 4.7.5	2.5 times RCWV or maximum overload voltage whichever is less for 5 seconds at room temperature	±(1% +0.05Ω) < 100mΩ for jumper No visible damage

Global part number - Preferred type

Ordering example: AC0603JR-07100KL

A C 0 6 0 3 J R — 0 7 1 0 0 K L

Series name (code 1-2)
AC = Automotive grade

Size code (code 3-6)
(inch / metric)
0402 = 1.0 x 0.5
0603 = 1.6 x 0.8
0805 = 2.0 x 1.25
1206 = 3.2 x 1.6
1210 = 3.2 x 2.6
1218 = 3.2 x 4.5
2010 = 5.0 x 2.5
2512 = 6.35 x 3.2

Tolerance (code 7)
F = ±1%
J = ±5% (for jumper ordering)

Packing style (code 8)
R = Paper tape reel
K = Embossed plastic tape reel

Default code(1/2) (code 17)

Resistance (code 12-16)
0R = Jumper
10R = 10Ω
100R = 100Ω
100K = 100KΩ

Taping reel (code 10-11)
07 = 7 inch Dia. reel
10 = 10 inch Dia. reel
13 = 13 inch Dia. reel

T. C. R. (code 9)
"—" = Based on spec.
(— for thick film only)

Note: 1. All of our RSMD products are RoHS compliant. "LFP" of the internal 2D reel label mentions "Lead Free Process"
2. Letter L is system default code for ordering only
3. AC series products are available by "Global part number" only

AT - RF attenuator chip resistors, 0404

Features

- Reduce system size
- Low assembly cost
- Higher component and system reliability
- Suitable for applications of mobile phones, receivers, battery chargers, palmtop computers and tablets

Derating curve

Maximum dissipation (P) in percentage of rated power as a function of the operating ambient temperature (T_{amb}).

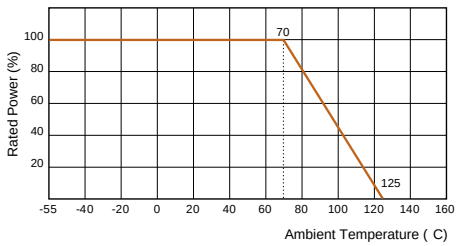

Construction

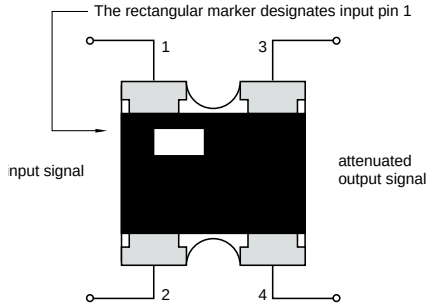

Schematics

ATV 321

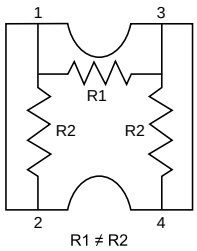

Dimensions

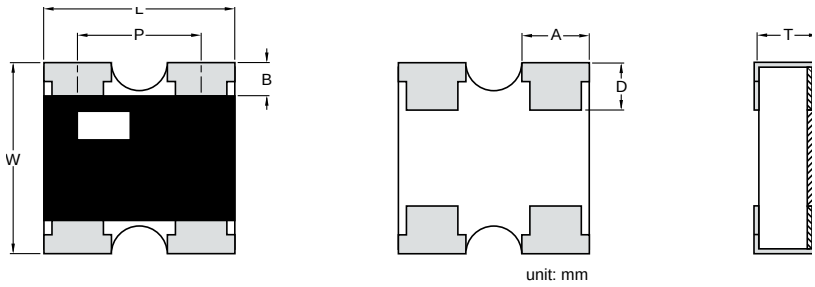

Type	L	W	T	A	B	P	D
ATV321	1.00 ±0.10	1.00 ±0.10	0.35 ±0.05	0.33 ±0.10	0.15 ±0.10	0.65 ±0.10	0.25 ±0.10

AT - RF attenuator chip resistors, 0404

Electrical characteristics							
Type	Power P_{70}	Operating Temp. range	MPV	VSWR (Max.)	Impedance	Attenuation range & tolerance	Frequency range
ATV321	40mW	-55°C to +125°C	50V	1.3	50Ω	-1dB to -5dB ±0.3 dB	-1dB to -10dB DC to 2.5 GHz
						-6dB to -10dB ±0.5 dB	
						-15dB ±1.0 dB	-15dB to -20dB DC to 2.0 GHz
						-20dB ±2.0 dB	

Environmental characteristics				
Performance test		Test method	Procedure	Requirements
Life		MIL-STD-202G-method 108A	1 000 hours at 70 ±5°C applied RCWV 1.5 hours on, 0.5 hours off, still air required	Max.: ±0.3 dB
Humidity (steady state)		JIS C 5202 7.5	1 000 hours, 40 ±2°C, 93(+2/-3)% RH RCWV applied for 1.5 hours on and 0.5 hour off	Max.: ±0.3 dB
Moisture resistance		MIL-STD-202G-method 106F	Each temperature / humidity cycle is defined as 8 hours (method 106F), 3 cycles / 24 hours for 10d with 25°C / 65°C 95% R.H	Max.: ±0.3 dB
Thermal shock		MIL-STD-202G-method 107G	LCT / UCT, number of cycles required is 300 Maximum transfer time is 20 seconds	Max.: ±0.3 dB
Solder-ability	Wetting	J-STD-002B testB	Electrical test not required. Magnification 50X Lead-free solder bath at 245 ±3°C Dipping time: 3 ±0.5 seconds	Well tinned (≥95% covered)
	Resistance to soldering heat	MIL-STD-202G-method 210F	Lead-free solder, 260°C, 10 seconds immersion time	Max.: ±0.1 dB
Short time overload		MIL-R-55342D-para 4.7.5	2.5 times RCWV or maximum overload voltage whichever is less for 5 seconds at room temperature	Max.: ±0.3 dB

AT - RF attenuator chip resistors, 0404

Global part number - Preferred type for ordering Yageo / Phycomp branded products

Ordering example: ATV321CR-071DBL

AT V321 C R — 07 1DB L

Series name (code 1-2)
AT = RF attenuator thick film

Size code (code 3-6)
(inch / metric)
V321 = 0404 = 1.0 x 1.0

Tolerance (code 7)
C = ±0.3dB
D = ±0.5dB
F = ±1dB
G = ± 2dB

Packing style (code 8)
R = Paper/PE tape reel

Default code(1/2) (code 16)

Attenuation (code 12-15)
0dB
-1dB
-2dB
-10dB
-15dB
-20dB

Taping reel (code 10-11)
07 = 7 inch Dia. reel

T. C. R. (code 9)
"—" = Based on spec.
(— for thick film only)

Note: 1. All of our RSMD products are RoHS compliant. "LFP" of the internal 2D reel label mentions "Lead Free Process"
2. Letter L is system default code for ordering only

Phycomp worldwide - Traditional type	
Packing	paper tape
Quantity 10 000	2350 703 11…L
Remark	For last three digits, see following table "Attenuation codes"

Note: L = Default code

Phycomp CTC ordering code - Traditional type - North America	
Packing	paper tape
Quantity 10 000	9CV3218AXXXXX-PF3
Remark	For last 9th to 13th digits, see following table "Attenuation codes"

Attenuation codes

Standard			
Value (dB)	Tolerance (dB)	Phycomp worldwide code (12NC)	Phycomp North America code (NA code)
1	±0.3	012	01DBC
2	±0.3	022	02DBC
3	±0.3	032	03DBC
4	±0.3	042	04DBC
5	±0.3	052	05DBC
6	±0.5	063	06DBD
7	±0.5	073	07DBD
8	±0.5	083	08DBD
9	±0.5	093	09DBD
10	±0.5	103	10DBD
15	±1.0	154	15DBF
20	±2.0	205	20DBG

Thick film chip resistors							
Global CTC (Preferred)	Description	Size	Tolerance	Max. power	Resistance range	Resistor pieces	Min. items
RC0100-R-SKE24L	RC0100, ±1% & ±5% , RoHS compliant, + Jumper	01005	F / J	1/32W	10 - 1M	100	100
RC0201-R-SKE24L	RC0201, ±1% & ±5% , RoHS compliant, + Jumper	0201	F / J	1/20 W	10 - 1M	100	120
RC0402JR-SKE24L	RC0402, ±5%, RoHS compliant, + Jumper	0402	J	1/16 W	10 - 1M	100	110
RC0402FR-SKE96L	RC0402, ±1%, RoHS compliant, + Jumper	0402	F	1/16 W	10 - 1M	100	450
RC0603JR-SKE24L	RC0603, ±5%, RoHS compliant, + Jumper	0603	J	1/10 W	10 - 1M	50	110
RC0603FR-SKE96L	RC0603, ±1%, RoHS compliant, + Jumper	0603	F	1/10 W	10 - 1M	50	450
RC0805JR-SKE24L	RC0805, ±5%, RoHS compliant, + Jumper	0805	J	1/8 W	10 - 1M	50	110
RC0805FR-SKE96L	RC0805, ±1%, RoHS compliant, + Jumper	0805	F	1/8 W	10 - 1M	50	280
RC1206JR-SKE24L	RC1206, ±5%, RoHS compliant, + Jumper	1206	J	1/4 W	10 - 1M	50	110
RC1206FR-SKE96L	RC1206, ±1%, RoHS compliant, + Jumper	1206	F	1/4 W	10 - 1M	50	350

Thick film array chip resistors (convex)							
Global CTC (Preferred)	Description	Size	Tolerance	Max. power	Resistance range	Resistor pieces	Min. items
YC12X-JR-SK001L	YC124 / YC122, ±5%, +Jumper, RoHS compliant,	0402 X 2 0402 X 4	J	1/16 W	10 - 1M	100	75

Engineering design kit for current sensing application							
Global CTC (Preferred)	Description	Size	Tolerance	Max. power	Resistance range	Resistor pieces	Min. items
CS0402-R-SK001L	RL0402 - RL2512, ±1% & ±5%, RoHS compliant	0402 - 2512	F / J	---	100m - 910m	30	160

Engineering design kit for mobile application							
Global CTC (Preferred)	Description	Size	Tolerance	Max. power	Resistance range	Resistor pieces	Min. items
MD0402-R-SK001L	Chip resistors / MLCC / Attenuators	---	---	---	---	50 - 100	44

Note: Before ordering, please contact our sales force for detail of resistance

Engineering design kit for automotive application							
Global CTC (Preferred)	Description	Size	Tolerance	Max. power	Resistance range	Resistor pieces	Min. items
AC0402-R-SK001L	AC0402 - AC1206, ±1% & ±5%, RoHS compliant, + Jumper	0402 - 1206	F/J	---	1 - 10M	50-100	200

Engineering design kit for general purpose							
Global CTC	Description	Size	Tolerance	Max. power	Resistance range	Resistor pieces	Items
RC0402-R-SK001L	Chip resistors / MLCC	0402 - 1206	---	---	---	50-100	472

Engineering design book for thin film chip resistor							
Global CTC	Description	Size	Tolerance	Max. power	Resistance range	Resistor pieces	Items
RT0402-R-SB001L	RT0402 - RT1206, E96 series, ±0.1%, RoHS compliant	0402 - 1206	B	---	10 ~ 1M	10	60

Engineering design book for automotive application							
Global CTC	Description	Size	Tolerance	Max. power	Resistance range	Resistor pieces	Items
AC0402-R-SB001L	AC0402 - AC1206, E96 series, ±1%, RoHS compliant	0402 - 1206	F	---	10 ~ 1M	10	60

Engineering design book for current sensing application							
Global CTC	Description	Size	Tolerance	Max. power	Resistance range	Resistor pieces	Items
PE0603-R-SB001L	PA/PE/PR, ±1%, RoHS compliant, low T.C.R.	0603 - 2512	F	---	0.5m ~ 50m	10	60

SMD CERAMIC MULTILAYER CAPACITORS

Specification overview

Specification overview					
Description	TC code	Series	Capacitance range	Voltage range	Size
Discrete	NPO	General purpose	0.47 pF to 22 nF	10V to 50 V	01005, 0201, 0402, 0603, 0805, 1206, 1210,1812
		Medium and High voltage	10 pF to 22 nF	100 V to 3000 V	0402, 0603, 0805, 1206, 1210, 1808, 1812
		High frequency	0.2 pF to 100 pF	16V to 250 V	01005, 0201, 0402, 0603, 0805
	X7R	General purpose & High capacitance	100 pF to 47 µF	6.3 V to 50 V	01005, 0201, 0402, 0603, 0805, 1206, 1210,1812, 2220
		Medium and High voltage	100 pF to 2.2 µF	100 V to 3000 V	0603, 0805, 1206, 1210, 1812
		Low inductance	10 nF to 220 nF	10 V to 50 V	0306, 0508, 0612
		Soft termination	100 pF to 1 µF	16 V to 630 V	0603, 0805,1206, 1210, 1808, 1812
	X5R	General purpose & High capacitance	100 pF to 100 µF	6.3 V to 50 V	01005, 0201, 0402, 0603, 0805, 1206, 1210,1812
	Y5V	General purpose & High capacitance	10 nF to 47 µF	6.3 V to 50 V	0201, 0402, 0603, 0805, 1206, 1210
Automotive grade products	NP0	Automotive grade	10 pF to 10 nF	50 V to 630 V	0402, 0603, 0805,1206, 1210
	X7R	Automotive grade	100 pF to 2.2 µF	16 V to 630 V	0402, 0603, 0805,1206, 1210
Safety certification products	NP0	High voltage SC type	2.0 pF to 470 pF	X1/Y2, X2/Y3	1808, 1812
	X7R	High voltage SC type	150 pF to 1.5 nF	X1/Y2, X2/Y3	1808, 1812
C-Arrays	NP0	4C arrays	10 pF to 470 pF	50 V	0508, 0612
	X7R	4C arrays	180 pF to 100 nF	16 V to 50 V	0508, 0612
	Y5V	4C arrays	10 nF to 100 nF	25 V	0612

Global part number

Ordering example: CC0201KRX7R8BB102

CC 0201 K R X7R 8 B B 102

Series name (code 1-2)
- CA = 4 x Capacitors array
- CC = Multilayer chip capacitors
- CL = Low inductance capacitors
- CQ = High frequency capacitors
- SC = Safety certification capacitors
- AC = Automotive grade capacitors
- CS = Soft termination capacitors

Size code (code 3-6)
- 0100
- 0201
- 0402
- 0603
- 0805
- 1206
- 1210
- 1808
- 1812
- 2220
- 0306
- 0508
- 0612

Capacitance tolerance (code 7)
- A = ±0.05 pF (CQ series only)
- B = ±0.1 pF
- C = ±0.25 pF
- D = ±0.5 pF
- F = ±1%
- G = ±2%
- J = ±5%
- K = ±10%
- M = ±20%
- Z = -20% to +80%

Packing style (code 8)
- R = Paper / PE tape reel Ø7 inch
- P = Paper / PE tape reel Ø13 inch
- K = Embossed plastic tape reel Ø7 inch
- F = Embossed plastic tape reel Ø13 inch
- C = Bulk case

TC material (code 9-11)
- NPO
- X5R
- X7R
- Y5V

Capacitance value (code 15-17)
- 102 = 1 000 pF
- (2 significant digits+number of zeros; the 3rd digit signifies the multiplying factor, and letter R is decimal point)
- 0 = x 1
- 1 = x 10^1
- 2 = x 10^2
- 3 = x 10^3
- 4 = x 10^4
- 5 = x 10^5
- 6 = x 10^6
- 7 = x 10^7
- X X R = Special capacitance
- (X X: capacitance before decimal point)

Process code (code 14)
- N = NP0
- B = Class 2 product

Termination (code 13)
- B = Ni-Barrier

Rated voltage (code 12)
- 5 = 6.3 V
- 6 = 10 V
- 7 = 16 V
- 8 = 25 V
- G = 35 V
- 9 = 50 V
- 0 = 100 V
- A = 200 V
- Y = 250 V
- B = 500 V
- Z = 630 V
- C = 1 kV
- D = 2 kV
- E = 3 kV
- T = X2 / Y3 for TUV / UL
- W = X1 / Y2 for TUV / UL
- U = X1 for UL (X7R, 1812)

Ordering information - Global part number

Global part number

Ordering example: CCxxxxKRX5RxBBxxx (for Low profile)

C C 1 05 9 K R X 7 R 8 B B 1 0 2

Series name (code 1-2)
- CC = Multilayer chip capacitors

Number of cap (code 3)
- 4 = 4 cap
- 2 = 2 cap
- 1 = Single

Size code (code 4-5)
- 01 = 0201
- 02 = 0402
- 03 = 0603
- 05 = 0805
- 06 = 1206, 0306
- 08 = 1808, 0508
- 10 = 1210
- 12 = 1812, 0612

Thickness (code 6)
- 3 = 0.3 mm
- 4 = 0.45 mm
- 5 = 0.5 mm
- 6 = 0.6 mm
- 8 = 0.8 mm
- 9 = 0.85 mm
- A = 1.0 mm
- B = 1.25 mm
- C = 1.6 mm
- D = 2.0 mm
- E = 2.5 mm
- F = 1.7 mm
- M = 1.15 mm
- N = 1.35 mm
- Q = 1.5 mm
- R = 1.8 mm

Capacitance tolerance (code 7)
- B = ±0.1 pF
- C = ±0.25 pF
- D = ±0.5 pF
- F = ±1%
- G = ±2%
- J = ±5%
- K = ±10%
- M = ±20%
- Z = -20% to +80%

Packing style (code 8)
- R = Paper / PE tape reel Ø7 inch
- P = Paper / PE tape reel Ø13 inch
- K = Embossed plastic tape reel Ø7 inch
- F = Embossed plastic tape reel Ø13 inch
- C = Bulk case

Capacitance value (code 15-17)
- 102 = 1 000 pF
- (2 significant digits+number of zeros; the 3rd digit signifies the multiplying factor, and letter R is decimal point)
- 0 = x 1
- 1 = x 10^1
- 2 = x 10^2
- 3 = x 10^3
- 4 = x 10^4
- 5 = x 10^5
- 6 = x 10^6
- 7 = x 10^7
- X X R = Special capacitance
- (X X: capacitance before decimal point)

Process code (code 14)
- N = NP0
- B = Class 2 product

Termination (code 13)
- B = Ni-Barrier

Rated voltage (code 12)
- 5 = 6.3 V
- 6 = 10 V
- 7 = 16 V
- 8 = 25 V
- 9 = 50 V
- 0 = 100 V
- A = 200 V
- B = 500 V
- C = 1 kV
- D = 2 kV
- E = 3 kV
- G = 35 V
- Y = 250 V
- Z = 630 V

TC material (code 9-11)
- X5R
- X7R

Thickness classes and packing quantities

Description	Size code	Thickness classification (mm)	Quantity per reel					Quantity per bulk case
			Tape width	180 mm / 7”		330 mm / 13”		
				Paper	Blister	Paper	Blister	
Discrete capacitors	01005	0.2±0.02	8 mm	20 000	---	---	---	---
	0201	0.3 ±0.03 / ±0.05		15 000	---	50 000	---	---
	0402	0.5 ±0.05 / ±0.15 / ±0.20		10 000	---	50 000	---	50 000
	0603	0.8 ±0.1 / ±0.2		4 000	---	15 000	---	15 000
	0805	0.6 ±0.1		4 000	---	20 000	---	10 000
		0.85/1.0 ±0.1		4 000	---	15 000	---	8 000
		1.25 ±0.2		---	3 000	---	10 000	5 000
	1206	0.6 ±0.1		4 000	---	20 000	---	---
		0.85 ±0.1		4 000	---	15 000	---	---
		1.00 / 1.15 ±0.1		---	3 000	---	10 000	---
		1.25 ±0.2		---	3 000	---	10 000	---
		1.6 ±0.15		---	2 500	---	10 000	---
		1.6 ±0.2 / ±0.3		---	2 000	---	10 000	---
	1210	0.6 / 0.7 ±0.1		---	4 000	---	15 000	---
		0.85 ±0.1		---	4 000	---	10 000	---
		1.0 ±0.15		---	3 000	---	10 000	---
		1.15 ±0.1		---	3 000	---	10 000	---
		1.15 ±0.15		---	3 000	---	10 000	---
		1.25 ±0.2		---	3 000	---	---	---
		1.5 ±0.1		---	2 000	---	---	---
		1.6 / 1.9 ±0.2		---	2 000	---	---	---
		2.0 ±0.2		---	2 000 / 1 000	---	---	---
		2.5 ±0.2 / ±0.3		---	1 000 / 500	---	---	---
	1808	1.15 ±0.15	12 mm	---	3 000	---	---	---
		1.25 ±0.2		---	3 000	---	---	---
		1.35 ±0.15		---	2 000	---	---	---
		1.5 ±0.1		---	2 000	---	---	---
		1.6 ±0.2		---	2 000	---	8 000	---
		2.0 ±0.2		---	2 000	---	---	---
	1812	0.6 / 0.85 ±0.1		---	2 000	---	---	---
		1.15 ±0.1		---	1 000	---	---	---
		1.15 ±0.15		---	1 000	---	---	---
		1.25 ±0.2		---	1 000	---	---	---
		1.35 ±0.15		---	1 000	---	---	---
		1.5 ±0.1		---	1 000	---	---	---
		1.6 ±0.2		---	1 000	---	---	---
		2.0 ±0.2		---	1 000	---	---	---
	2220	0.85 ±0.1		---	1 500	---	---	---
		1.15 ±0.1		---	1 500	---	---	---
Low inductance	0306	0.5 ±0.1	8 mm	4 000	---	15 000	---	---
	0508	0.85 ±0.1		4 000	---	15 000	---	---
	0612	0.85 ±0.1		4 000	---	15 000	---	---
Arrays	0508	0.6 ±0.1		4 000	---	---	---	---
	0612	0.8 ±0.1		4 000	---	---	---	---

Features

- Ultra-stable on capacitance
- Tight tolerance available
- High reliability
- Low ESR
- Good frequency performance
- No aging of capacitance

Temperature characteristic

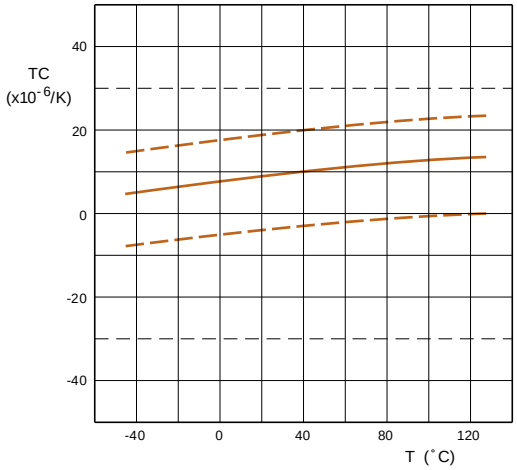

Construction

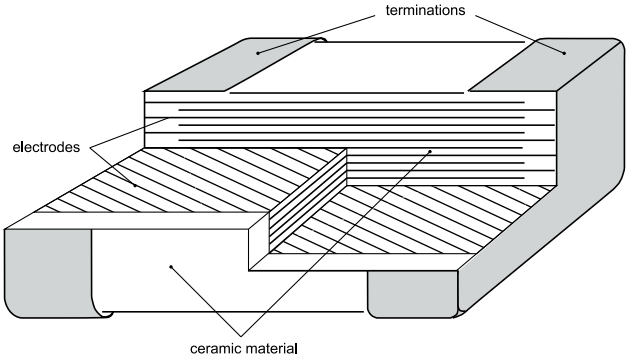

Case dimensions

Discrete capacitors - General purpose

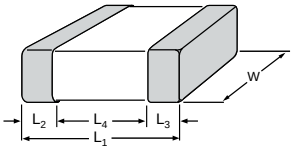

Case size designation		Dimensions in mm				
Inch-based	Metric	L_1	W	L_2 / $L_{3\ min}$	L_2 / $L_{3\ max}$	$L_{4\ min}$
01005	0402M	0.4±0.02	0.2±0.02	0.07	0.14	0.14
0201	0603M	0.6 ±0.03	0.3 ±0.03	0.10	0.20	0.20
0402	1005M	1.0 ±0.05	0.5 ±0.05	0.15	0.30	0.40
0603	1608M	1.6 ±0.10	0.8 ±0.10	0.20	0.60	0.40
0805	2012M	2.0 ±0.10 (1)	1.25 ±0.10 (1)	0.25	0.75	0.55
		2.0 ±0.20 (2)	1.25 ±0.20 (2)	0.25	0.75	0.55
1206	3216M	3.2 ±0.15 (1)	1.6 ±0.15 (1)	0.25	0.75	1.40
		3.2 ±0.30 (2)	1.6 ±0.20 (2)	0.25	0.75	1.40
1210	3225M	3.2 ±0.20 (1)	2.5 ±0.20 (1)	0.25	0.75	1.40
		3.2 ±0.40 (2)	2.5 ±0.30 (2)	0.25	0.75	1.40
1812	4532M	4.5 ±0.20 (1)	3.2 ±0.20 (1)	0.25	0.75	2.20
		4.5 ±0.40 (2)	3.2 ±0.40 (2)	0.25	0.75	2.20

Note: 1. Dimension for size 0805 to 1812, C ≤ 1 nF
2. Dimension for size 0805 to 1812, C > 1 nF

NP0										
General purpose										
Capacitance	01005	0201			0402			0603		
	16 V	16 V	25 V	50 V	16 V	25 V	50 V	16 V	25 V	50 V
0.22 pF		0.3 ±0.03	0.3 ±0.03	0.3 ±0.03						
0.47 pF										
0.56 pF					0.5 ±0.05	0.5 ±0.05	0.5 ±0.05	0.8 ±0.1	0.8 ±0.1	0.8 ±0.1
0.68 pF										
0.82 pF										
1 pF										
1.2 pF										
1.5 pF										
1.8 pF										
2.2 pF										
2.7 pF										
3.3 pF										
3.9 pF										
4.7 pF										
5.6 pF										
6.8 pF										
8.2 pF										
10 pF	0.2 ±0.02									
12 pF										
15 pF										
18 pF										
22 pF										
27 pF										
33 pF										
39 pF										
47 pF										
56 pF										
68 pF										
82 pF										
100 pF										
120 pF										
150 pF										
180 pF										
220 pF										
270 pF										
330 pF										
390 pF										
470 pF										
560 pF										
680 pF										
820 pF										
1000 pF					0.5 ±0.05	0.5 ±0.05	0.5 ±0.05			
Tape width	8 mm									

Note: Values in shaded cells indicate thickness class (unit: mm)

NPO - General purpose 16 to 50V, 01005 to 0603

NP0										
General purpose										
Capacitance	01005	0201			0402			0603		
	16 V	16 V	25 V	50 V	16 V	25 V	50 V	16 V	25 V	50 V
1.2 nF								0.8 ±0.1	0.8 ±0.1	0.8 ±0.1
1.5 nF										
1.8 nF										
2.2 nF										
2.7 nF										
3.3 nF										
3.9 nF										
4.7 nF										
5.6 nF										
6.8 nF										
8.2 nF										
10 nF										
12 nF										
15 nF										
18 nF										
22 nF										
33 nF										
39 nF										
Tape width	8 mm									

Note: Values in shaded cells indicate thickness class (unit: mm)

NP0									
	General purpose								
Capacitance	0805			1206			1210	1210	1812
	16 V	25 V	50 V	16 V	25 V	50 V	25 V	50 V	50 V
0.22 pF									
0.47 pF									
0.56 pF									
0.68 pF									
0.82 pF									
1 pF									
1.2 pF									
1.5 pF									
1.8 pF									
2.2 pF									
2.7 pF									
3.3 pF									
3.9 pF									
4.7 pF									
5.6 pF									
6.8 pF									
8.2 pF									
10 pF									
12 pF									
15 pF									
18 pF									
22 pF	0.6 ±0.1	0.6 ±0.1	0.6 ±0.1	0.6 ±0.1	0.6 ±0.1	0.6 ±0.1			
27 pF									
33 pF									
39 pF									
47 pF									
56 pF									
68 pF									
82 pF									
100 pF									
120 pF									
150 pF									
180 pF									
220 pF							1.25 ±0.2	1.25 ±0.2	1.25 ±0.2
270 pF									
330 pF									
390 pF									
470 pF									
560 pF									
680 pF									
820 pF									
1000 pF									
Tape width	8 mm								

Note: Values in shaded cells indicate thickness class (unit: mm)

NPO - Gerneral purpose 16 to 50V, 0805 to 1812

NP0									
General purpose									
Capacitance	0805			1206			1210	1210	1812
	16 V	25 V	50 V	16 V	25 V	50 V	25 V	50 V	50 V
1.2 nF	0.85 ±0.1	0.85 ±0.1	0.85 ±0.1	0.6 ±0.1	0.6 ±0.1	0.6 ±0.1	1.25 ±0.2	1.25 ±0.2	1.25 ±0.2
1.5 nF									
1.8 nF									
2.2 nF	1.25 ±0.2	1.25 ±0.2	1.25 ±0.2						
2.7 nF									
3.3 nF				0.85 ±0.1	0.85 ±0.1	0.85 ±0.1			
3.9 nF									
4.7 nF									
5.6 nF									
6.8 nF									
8.2 nF				1.25 ±0.2	1.25 ±0.2	1.25 ±0.2			
10 nF	1.25 ±0.2	1.25 ±0.2	1.25 ±0.2						
12 nF									
15 nF									
18 nF									
22 nF							2.0 ±0.2	2.0 ±0.2	
33 nF				0.85 ±0.1	0.85 ±0.1	0.85 ±0.1			
39 nF									
47 nF				1.15 ±0.1	1.15 ±0.1	1.15 ±0.1			
56 nF				1.6 ±0.2	1.6 ±0.2	1.6 ±0.2			
68 nF				1.6 ±0.2	1.6 ±0.2	1.6 ±0.2			
82 nF									
100 nF									
Tape width	8 mm								

Note: Values in shaded cells indicate thickness class (unit: mm)

Features

- Capable of operating at high voltage levels
- For high frequency snubber
- Decoupling / smoothing function

Temperature characteristic

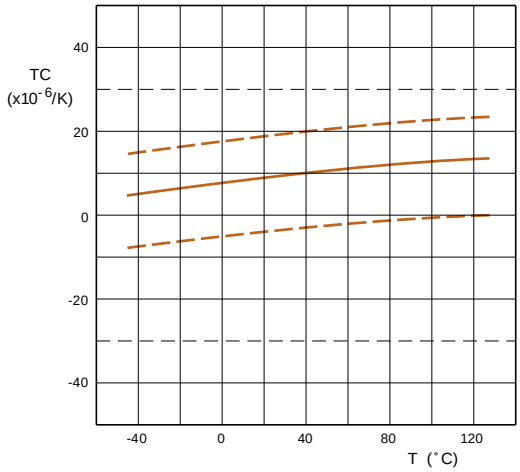

Construction

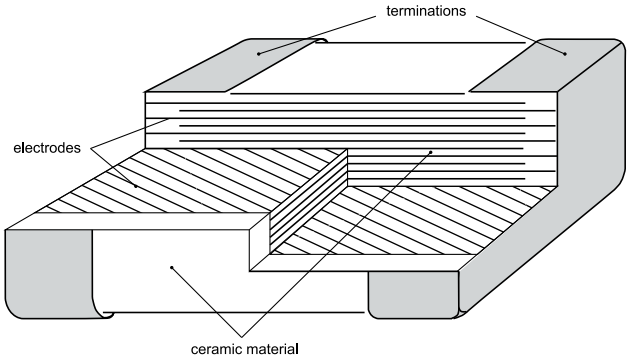

Dimensions

Discrete capacitors - Medium and High voltage

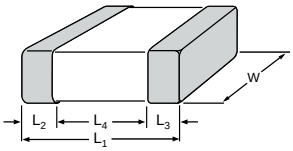

Case size designation		Dimensions in mm				
Inch-based	Metric	L_1	W	L_2 / L_3 min	L_2 / L_3 max	L_4 min
0402	1005M	1.0 ±0.05	0.5 ±0.05	0.15	0.30	0.40
0603	1608M	1.6 ±0.10	0.8 ±0.10	0.20	0.60	0.40
0805	2012M	2.0 ±0.20	1.25 ±0.20	0.25	0.75	0.55
1206	3216M	3.2 ±0.30	1.6 ±0.20	0.25	0.75	1.40
1210	3225M	3.2 ±0.40	2.5 ±0.30	0.25	0.75	1.40
1808	4520M	4.5 ±0.40	2.0 ±0.30	0.25	0.75	2.20
1812	4532M	4.5 ±0.40	3.2 ±0.30	0.25	0.75	2.20

NPO - Medium voltage, 0402 to 0805

NP0							
	Medium voltage						
Capacitance	0402	0603		0805			
	100 V	100 V	250 V	100 V	250 V	500 V	630 V
1 pF	0.5 ±0.05	0.8 ±0.1	0.8 ±0.1	0.6 ±0.1	0.6 ±0.1	0.6 ±0.1	0.6 ±0.1
1.2 pF							
1.5 pF							
1.8 pF							
2.2 pF							
2.7 pF							
3.3 pF							
3.9 pF							
4.7 pF							
5.6 pF							
6.8 pF							
8.2 pF							
10 pF							
12 pF							
15 pF							
18 pF							
22 pF							
27 pF							
33 pF							
39 pF							
47 pF							
56 pF							
68 pF							
82 pF							
100 pF							
120 pF							
150 pF							
180 pF							
220 pF					0.85 ±0.1	0.85 ±0.1	0.85 ±0.1
270 pF							
330 pF							
390 pF							
470 pF							
560 pF						1.25 ±0.2	1.25 ±0.2
680 pF							
820 pF							
1000 pF							
1.2 nF				0.85 ±0.1	1.25 ±0.2		
1.5 nF							
1.8 nF							
2.2 nF				1.25 ±0.2			
2.7 nF							
3.3 nF							
3.9 nF							
4.7 nF							
Tape width	8 mm						

Note: Values in shaded cells indicate thickness class (unit: mm)

NP0								
Medium voltage								
Capacitance	1206				1210			
	100 V	250 V	500 V	630 V	100 V	250 V	500 V	630 V
1 pF								
1.2 pF								
1.5 pF								
1.8 pF								
2.2 pF								
2.7 pF								
3.3 pF								
3.9 pF								
4.7 pF								
5.6 pF								
6.8 pF								
8.2 pF								
10 pF								
12 pF								
15 pF								
18 pF								
22 pF								
27 pF								
33 pF								
39 pF			0.6 ±0.1					
47 pF								
56 pF								
68 pF								
82 pF								1.25 ±0.2
100 pF				1.25 ±0.2				
120 pF								
150 pF								
180 pF								
220 pF					1.25 ±0.2	1.25 ±0.2	1.25 ±0.2	
270 pF								
330 pF								
390 pF								
470 pF								
560 pF								
680 pF								
820 pF								
1000 pF		0.85 ±0.1	0.85 ±0.1					
1.2 nF								
1.5 nF								
1.8 nF	0.6 ±0.1		1.25 ±0.2					
2.2 nF						1.25 ±0.2	1.25 ±0.2	
2.7 nF		1.25 ±0.2						
3.3 nF					1.25 ±0.2			
3.9 nF								
4.7 nF	0.85 ±0.1							
5.6 nF								
6.8 nF								
8.2 nF	1.25 ±0.2							
10 nF								
Tape width	8 mm							

Note: Values in shaded cells indicate thickness class (unit: mm)

NPO - High voltage, 0805 to 1210

NP0					
	High voltage				
Capacitance	0805	1206		1210	
	1000 V	1000 V	2000 V	1000 V	2000 V
10 pF	0.85 ±0.1	1.25 ±0.2	1.25 ±0.2		
12 pF					
15 pF					
18 pF					
22 pF					
27 pF					
33 pF				1.25 ±0.2	1.25 ±0.2
39 pF					
47 pF					
56 pF					
68 pF					
82 pF					
100 pF					
120 pF					
150 pF					
180 pF					
220 pF					
270 pF					
330 pF					
390 pF					
470 pF					
560 pF					
680 pF					
820 pF					
1000 pF					
1.2 nF					
1.5 nF					
1.8 nF					
2.2 nF					
2.7 nF					
3.3 nF					
3.9 nF					
4.7 nF					
5.6 nF					
6.8 nF					
8.2 nF					
10 nF					
12 nF					
15 nF					
18 nF					
22 nF					
33 nF					
Tape width	8 mm				

Note: Values in shaded cells indicate thickness class (unit: mm)

NP0						
	High voltage					
Capacitance	1808			1812		
	1000 V	2000 V	3000 V	1000 V	2000 V	3000 V
10 pF			1.6 ±0.2	1.25 ±0.2	1.25 ±0.2	1.25 ±0.2
12 pF						
15 pF						
18 pF						
22 pF						
27 pF						
33 pF	1.25 ±0.2	1.25 ±0.2				
39 pF						
47 pF						
56 pF						
68 pF						
82 pF						
100 pF						
120 pF						
150 pF						
180 pF			2.0 ±0.2			
220 pF						
270 pF						
330 pF						
390 pF						
470 pF						
560 pF						
680 pF						
820 pF						
1000 pF	1.25 ±0.2					
1.2 nF						
1.5 nF						
1.8 nF						
2.2 nF						
2.7 nF						
3.3 nF						
3.9 nF						
4.7 nF						
5.6 nF						
6.8 nF						
8.2 nF						
10 nF						
12 nF						
15 nF						
18 nF						
22 nF						
33 nF						
Tape width	12 mm					

Note: Values in shaded cells indicate thickness class (unit: mm)

NP0 - High frequency, 01005 to 0805

Features

- Lowest ESR in high frequency
- Ultra small
- Noise filtering

ESR characteristic

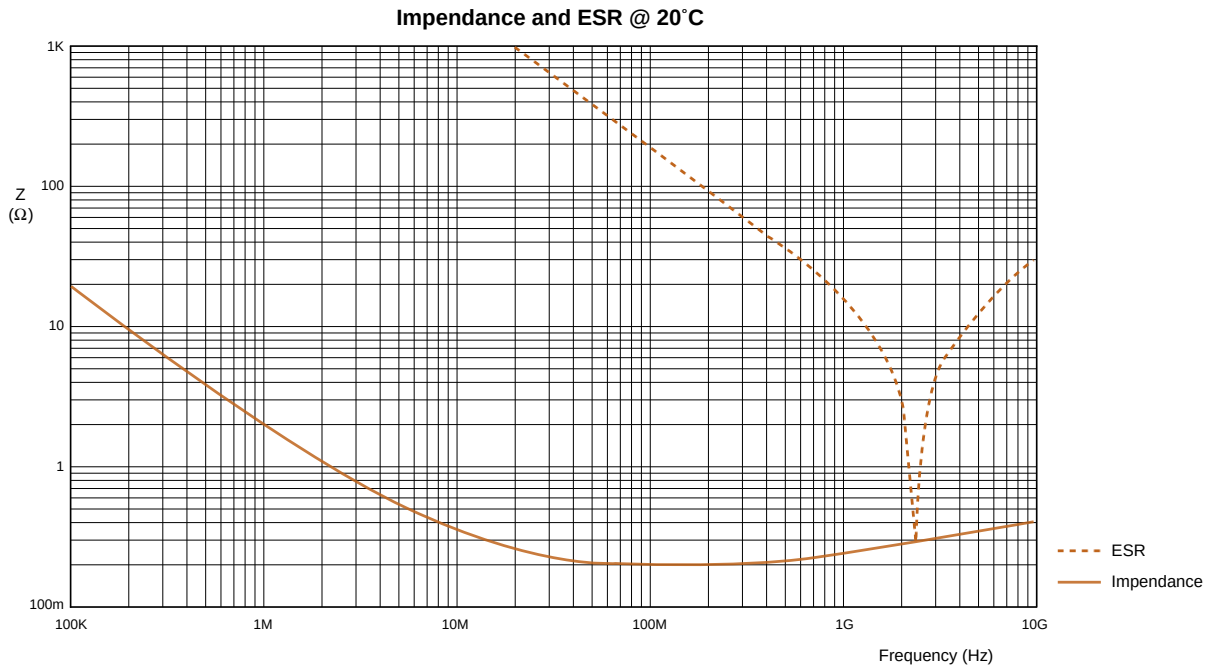

Construction

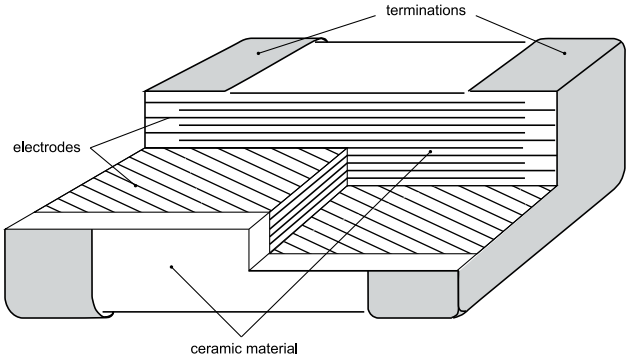

Case dimensions

Discrete capacitors - High Frequency

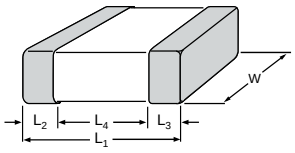

Case size designation		Dimensions in mm				
Inch-based	Metric	L_1	W	L_2 / $L_{3\ min}$	L_2 / $L_{3\ max}$	$L_{4\ min}$
01005	0402M	0.4 ±0.02	0.2 ±0.02	0.07	0.14	0.13
0201	0603M	0.6 ±0.03	0.3 ±0.03	0.10	0.20	0.20
0402	1005M	1.0 ±0.05	0.5 ±0.05	0.15	0.30	0.40
0603	1608M	1.6 ±0.10	0.8 ±0.10	0.20	0.60	0.40
0805	2012M	2.0 ±0.10	1.25 ±0.10	0.25	0.75	0.55

NP0

High frequency

Capacitance	01005	0201		0402		
	16 V	16 V	25 V	16 V	25 V	50 V
0.2 pF	0.2 ±0.02	0.3 ±0.03	0.3 ±0.03	0.5 ±0.05	0.5 ±0.05	0.5 ±0.05
0.3 pF						
0.4 pF						
0.5 pF						
0.6 pF						
0.7 pF						
0.8 pF						
0.9 pF						
1 pF						
1.2 pF						
1.5 pF						
1.8 pF						
2.2 pF						
2.7 pF						
3.3 pF						
3.9 pF						
4.7 pF						
5.6 pF						
6.8 pF						
8.2 pF						
10 pF						
12 pF						
15 pF						
18 pF						
22 pF						
27 pF						
33 pF						
39 pF						
47 pF						
Tape width	8 mm					

Note: Values in shaded cells indicate thickness class (unit: mm)

NP0

High frequency

Capacitance	0603			0805		
	50 V	100 V	250 V	50 V	100 V	250 V
0.22 pF	0.8 ±0.1	0.8 ±0.1	0.8 ±0.1	0.6 ±0.1	0.6 ±0.1	0.6 ±0.1
0.47 pF						
0.56 pF						
0.68 pF						
0.82 pF						
1 pF						
1.2 pF						
1.5 pF						
1.8 pF						
2.2 pF						
2.7 pF						
3.3 pF						
3.9 pF						
4.7 pF						
5.6 pF						
6.8 pF						
8.2 pF						
10 pF						
12 pF						
15 pF						
18 pF						
22 pF						
27 pF						
33 pF						
39 pF						
47 pF						
56 pF						
68 pF						
82 pF						
100 pF						
Tape width	8 mm					

Note: Values in shaded cells indicate thickness class (unit: mm)

X7R - General purpose & High capacitance, 01005 to 2220

Features

- Semi-stable on capacitance and high K
- High volumetric efficiency
- Highly reliable in high temperature application
- High insulation resistance

Temperature characteristic

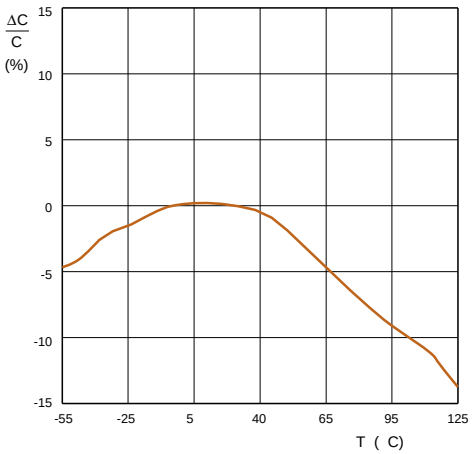

Construction

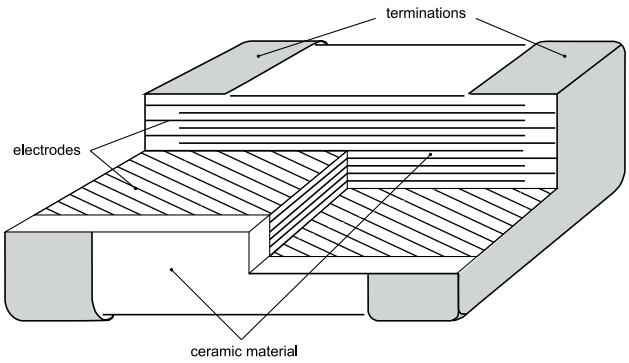

Case dimensions

Discrete capacitors - General purpose & High capacitance

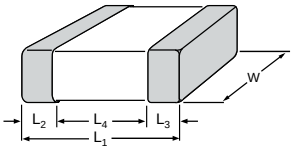

Case size designation		Dimensions in mm				
Inch-based	Metric	L_1	W	L_2 / L_3 min	L_2 / L_3 max	L_4 min
01005	0402M	0.4±0.02	0.2±0.02	0.07	0.14	0.14
0201	0603M	0.6 ±0.03	0.3 ±0.03	0.10	0.20	0.20
		0.6 ±0.05	0.3 ±0.05	0.10	0.20	0.20
0402	1005M	1.0 ±0.05 (1)	0.5 ±0.05 (1)	0.15	0.30	0.40
		1.0 ±0.20 (2)	0.5 ±0.20 (2)	0.15	0.30	0.40
0603	1608M	1.6 ±0.10 (1)	0.8 ±0.10 (1)	0.20	0.60	0.40
		1.6 ±0.15 (2)	0.8 ±0.15 (2)	0.20	0.60	0.40
0805	2012M	2.0 ±0.10 (1)	1.25 ±0.10 (1)	0.25	0.75	0.55
		2.0 ±0.20 (2)	1.25 ±0.20 (2)	0.25	0.75	0.55
1206	3216M	3.2 ±0.15 (1)	1.6 ±0.15 (1)	0.25	0.75	1.40
		3.2 ±0.30 (2)	1.6 ±0.20 (2)	0.25	0.75	1.40
1210	3225M	3.2 ±0.20 (1)	2.5 ±0.20 (1)	0.25	0.75	1.40
		3.2 ±0.40 (2)	2.5 ±0.30 (2)	0.25	0.75	1.40
1808	4520M	4.5 ±0.40	2.0 ±0.30	0.25	0.75	2.20
1812	4532M	4.5 ±0.20 (1)	3.2 ±0.20 (1)	0.25	0.75	2.20
		4.5 ±0.40 (2)	3.2 ±0.40 (2)	0.25	0.75	2.20
2220	5750M	5.7 ±0.40	5.0 ±0.30	0.25	0.75	3.40

Note: 1. Dimension for size 0402, C < 4.7 µF; 0603, C < 10 µF; 0805 to 1812, C ≤ 100 nF
2. Dimension for size 0402, C ≥ 4.7 µF; 0603, C ≥ 10 µF; 0805 to 1812, C > 100 nF

X7R - General purpose & High Capacitance , 01005 to 0402

X7R												
General purpose												
Capacitance	01005		0201					0402				
	6.3 V	10 V	6.3 V	10 V	16 V	25 V	50 V	6.3 V	10 V	16 V	25 V	50 V
10 pF												
15 pF												
22 pF												
33 pF												
47 pF												
68 pF												
100 pF												
150 pF												
220 pF							0.3 ±0.03					
330 pF	0.2 ±0.02	0.2 ±0.02										
470 pF												
680 pF			0.3 ±0.03	0.3 ±0.03	0.3 ±0.03	0.3 ±0.03						
1.0 nF												
1.5 nF												
2.2 nF												
3.3 nF								0.5 ±0.05	0.5 ±0.05	0.5 ±0.05	0.5 ±0.05	0.5 ±0.05
4.7 nF												
6.8 nF												
10 nF												
15 nF												
22 nF												
33 nF												
47 nF												
68 nF												
100 nF												
150 nF												
220 nF								0.5 ±0.05	0.5 ±0.05	0.5 ±0.05		
330 nF												
470 nF								0.5 ±0.05	0.5 ±0.05			
680 nF												
1000 nF								0.5 ±0.05				
2.2 µF												
4.7 µF												
10 µF												
22 µF												
47 µF												
100 µF												
Tape width			8 mm									

Note: Values in shaded cells indicate thickness class (unit: mm)

X7R - General purpose & High capacitance, 0603 / 0805

X7R										
	General purpose									
Capacitance	0603					0805				
	6.3 V	10 V	16 V	25 V	50 V	6.3 V	10 V	16 V	25 V	50 V
10 pF										
15 pF										
22 pF										
33 pF										
47 pF										
68 pF										
100 pF										
150 pF										
220 pF										
330 pF										
470 pF										
680 pF										
1.0 nF										
1.5 nF						0.6 ±0.1	0.6 ±0.1	0.6 ±0.1	0.6 ±0.1	0.6 ±0.1
2.2 nF										
3.3 nF										
4.7 nF				0.8 ±0.1	0.8 ±0.1					
6.8 nF										
10 nF	0.8 ±0.1	0.8 ±0.1	0.8 ±0.1							
15 nF										
22 nF										
33 nF										
47 nF										
68 nF						0.85 ±0.1	0.85 ±0.1	0.85 ±0.1	0.85 ±0.1	0.85 ±0.1
100 nF										
150 nF										
220 nF										
330 nF										
470 nF				0.8 ±0.1						1.25 ±0.2
680 nF										
1000 nF				0.8 ±0.1	0.8 ±0.15	1.25 ±0.2	1.25 ±0.2	1.25 ±0.2	1.25 ±0.2	
2.2 µF										
4.7 µF										
10 µF										
22 µF										
47 µF										
100 µF										
Tape width	8 mm									

Note: Values in shaded cells indicate thickness class (unit: mm)

X7R - General purpose & High capacitance, 1206 to 2220

X7R												
	General purpose											
Capacitance	1206					1210					1812	2220
	6.3 V	10 V	16 V	25 V	50 V	6.3 V	10 V	16 V	25 V	50 V	50 V	50 V
10 pF												
15 pF												
22 pF												
33 pF												
47 pF												
68 pF												
100 pF												
150 pF												
220 pF												
330 pF												
470 pF												
680 pF												
1.0 nF												
1.5 nF												
2.2 nF												
3.3 nF												
4.7 nF					0.85 ±0.1							
6.8 nF												
10 nF	0.85 ±0.1	0.85 ±0.1	0.85 ±0.1	0.85 ±0.1								
15 nF										0.85 ±0.1	0.85 ±0.1	
22 nF												
33 nF						0.85 ±0.1	0.85 ±0.1	0.85 ±0.1	0.85 ±0.1			
47 nF												
68 nF												
100 nF												
150 nF					1.15 ±0.1					1.15 ±0.1	1.15 ±0.1	
220 nF												0.85 ±0.1
330 nF					0.85 ±0.1							
470 nF					1.0 ±0.1	1.15 ±0.1	1.15 ±0.1	1.15 ±0.1	1.15 ±0.1	1.25 ±0.2		
680 nF											1.6 ±0.2	
1000 nF	1.15 ±0.1	1.15 ±0.1	1.15 ±0.1	1.15 ±0.1	1.6 ±0.2	1.25 ±0.2	1.25 ±0.2	1.25 ±0.2	1.25 ±0.2			1.15 ±0.1
2.2 µF						1.9 ±0.2	1.9 ±0.2	1.9 ±0.2	1.9 ±0.2	1.9 ±0.2		
4.7 µF	1.6 ±0.2	1.6 ±0.2	1.6 ±0.2	1.6 ±0.2						2.5 ±0.2		
10 µF												
22 µF						2.5 ±0.2	2.5 ±0.2	2.5 ±0.2	2.5 ±0.2			
47 µF												
100 µF												
Tape width	8 mm											

Note: Values in shaded cells indicate thickness class (unit: mm)

X7R - Medium & High voltage, 0402 to 1812

Features

- Capable of operating at high voltage levels
- For high frequency snubber
- Decoupling / smoothing function

Temperature characteristic

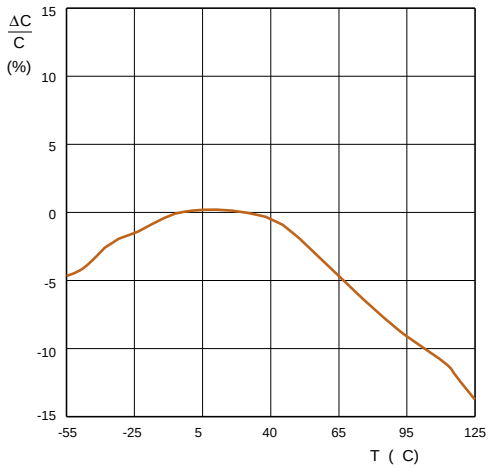

Construction

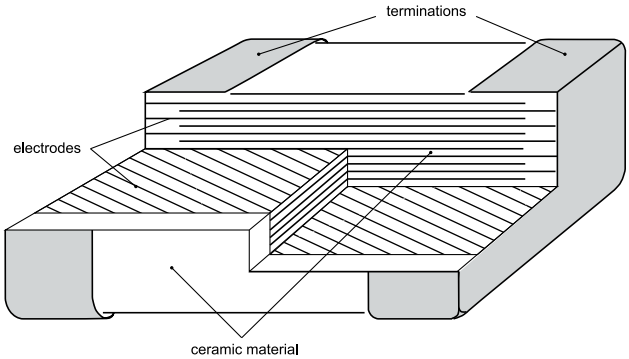

Dimensions

Discrete capacitors - Medium and High voltage

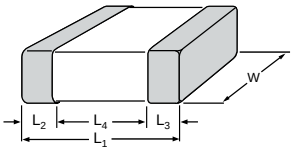

Case size designation		Dimensions in mm				
Inch-based	Metric	L_1	W	L_2 / L_3 min	L_2 / L_3 max	L_4 min
0402	1005M	1.0 ±0.05	0.5 ±0.05	0.15	0.30	0.40
0603	1608M	1.6 ±0.10	0.8 ±0.10	0.20	0.60	0.40
0805	2012M	2.0 ±0.20	1.25 ±0.20	0.25	0.75	0.55
1206	3216M	3.2 ±0.30	1.6 ±0.20	0.25	0.75	1.40
1210	3225M	3.2 ±0.40	2.5 ±0.30	0.25	0.75	1.40
1808	4520M	4.5 ±0.40	2.0 ±0.30	0.25	0.75	2.20
1812	4532M	4.5 ±0.40	3.2 ±0.30	0.25	0.75	2.20

X7R - Medium and High voltage, 0402 to 0805

X7R								
Medium voltage & High voltage								
Capacitance	0402	0603		0805				
	100 V	100 V	250 V	100 V	250 V	500 V	630 V	1000 V
100 pF	0.5 ±0.05	0.8 ±0.1						
150 pF				0.6 ±0.1	0.85 ±0.1	0.85 ±0.1	0.85 ±0.1	0.85 ±0.1
220 pF			0.8 ±0.1					
330 pF								
470 pF								
680 pF								
1.0 nF								
1.5 nF								
2.2 nF								
3.3 nF								
4.7 nF								
6.8 nF					1.25 ±0.2			
10 nF						1.25 ±0.2	1.25 ±0.2	
15 nF				0.85 ±0.1				
22 nF								
33 nF				1.25 ±0.2				
47 nF								
68 nF								
100 nF								
150 nF								
220 nF								
330 nF								
470 nF								
680 nF								
1000 nF								
2.2 µF								
4.7 µF								
10 µF								
22 µF								
47 µF								
100 µF								
Tape width	12 mm							

Note: Values in shaded cells indicate thickness class (unit: mm)

X7R - Medium and High voltage, 1206 / 1210

X7R												
	Medium voltage & High voltage											
Capacitance	1206						1210					
	100 V	250 V	500 V	630 V	1000 V	2000 V	100 V	250 V	500 V	630 V	1000 V	2000 V
100 pF												
150 pF												
220 pF												
330 pF												
470 pF						1.25 ±0.2						
680 pF												
1.0 nF												
1.5 nF		0.85 ±0.1			1.25 ±0.2							
2.2 nF			1.25 ±0.2	1.25 ±0.2								
3.3 nF	0.85 ±0.1										1.25 ±0.2	1.25 ±0.2
4.7 nF								0.85 ±0.1		1.25 ±0.2		
6.8 nF									1.25 ±0.2			
10 nF												
15 nF							0.85 ±0.1					
22 nF		1.25 ±0.2		1.6 ±0.2				1.25 ±0.2		1.6 ±0.2	1.6 ±0.2	1.6 ±0.2
33 nF			1.6 ±0.2									
47 nF												
68 nF	1.25 ±0.2											
100 nF		1.6 ±0.2										
150 nF							1.25 ±0.2					
220 nF												
330 nF	1.6 ±0.2						1.6 ±0.2					
470 nF							1.25 ±0.2					
680 nF												
1000 nF	1.6 ±0.2						2.0 ±0.2					
2.2 µF												
4.7 µF												
10 µF												
22 µF												
47 µF												
100 µF												
Tape width	12 mm											

Note: Values in shaded cells indicate thickness class (unit: mm)

X7R - Medium and High voltage, 1808 / 1812

X7R										
	Medium voltage & High voltage									
Capacitance	1808			1812						
	1000 V	2000 V	3000 V	100 V	250 V	500 V	630 V	1000 V	2000 V	3000 V
100 pF										
150 pF			1.6 ±0.2							
220 pF										
330 pF		1.35 ±0.2								
470 pF	1.35 ±0.2									
680 pF										
1.0 nF			2.0 ±0.2					1.35 ±0.2	1.35 ±0.2	1.6 ±0.2
1.5 nF										
2.2 nF		1.6 ±0.2								
3.3 nF						1.25 ±0.2	1.25 ±0.2			
4.7 nF				0.85 ±0.1	0.85 ±0.1					
6.8 nF	1.6 ±0.2								1.6 ±0.2	
10 nF									2.0 ±0.2	
15 nF										
22 nF										
33 nF								1.6 ±0.2		
47 nF					1.25 ±0.2					
68 nF										
100 nF				1.25 ±0.2		1.6 ±0.2				
150 nF										
220 nF					1.6 ±0.2					
330 nF										
470 nF				1.6 ±0.2						
680 nF										
1000 nF										
2.2 µF										
4.7 µF										
10 µF										
22 µF										
47 µF										
100 µF										
Tape width	12 mm									

Note: Values in shaded cells indicate thickness class (unit: mm)

X7R / X5R - Low inductance, 0306 to 0612

Features

- Good solution for anti resonance reduction with controlled ESR
- Suitable for high speed IC decoupling due to low inductance type

Temperature characteristic

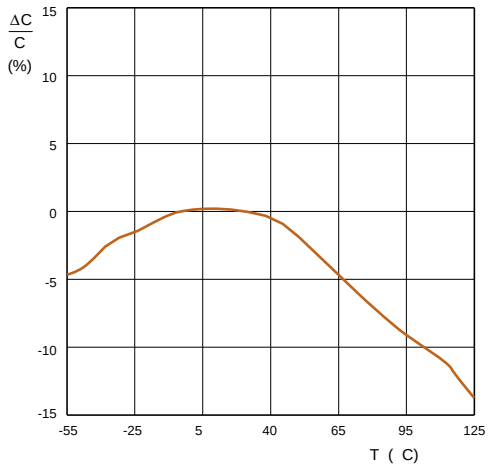

Construction

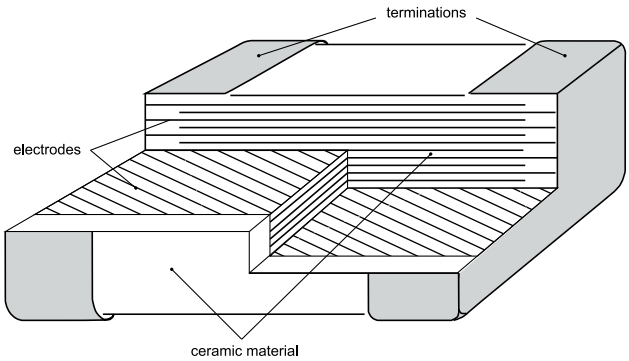

Dimensions

Discrete capacitors - Low inductance types only

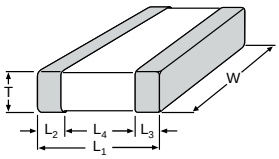

Case size designation		Dimensions in mm					
Inch-based	Metric	L_1	W	T	L_2 / L_3 min	L_2 / L_3 max	L_4 min
0306	0816M	0.8 ±0.15	1.6 ±0.20	0.50 ±0.10	0.10	0.30	0.20
0508	1220M	1.25 ±0.20	2.0 ±0.20	0.85 ±0.10	0.13	0.46	0.38
0612	1632M	1.6 ±0.20	3.2 ±0.20	0.85 ±0.10	0.13	0.46	0.50

X7R							
Low Inductance series							
Capacitance	0306	0508			0612		
	10 V	10 V	16 V	25 V	16 V	25 V	50 V
10 nF				0.85 ±0.1	0.85 ±0.1	0.85 ±0.1	0.85 ±0.1
22 nF							
47 nF							
100 nF	0.5 ±0.1		0.85 ±0.1				
220 nF		0.85 ±0.1				1.15 ±0.1	1.15 ±0.1
470 nF							
1000 nF					1.15 ±0.1		
Tape width	8 mm						

Note: Values in shaded cells indicate thickness class (unit: mm)

X5R			
Low Inductance series			
Capacitance	0306		
	6.3 V	10 V	16 V
100 nF			
220 nF			
470 nF			0.5±0.1
1000 nF	0.5±0.1	0.5±0.1	
Tape width	8 mm		

Note: Values in shaded cells indicate thickness class (unit: mm)

X7R - Soft termination, 0603 to 1812

Features

- Flexible termination system
- Improved resistance to thermal stresses
- Increased mechanical performance

Temperature characteristic

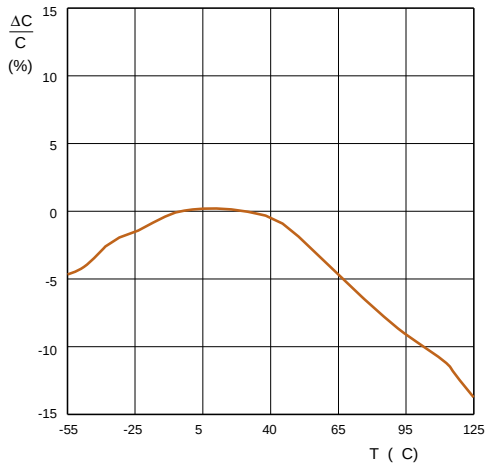

Construction

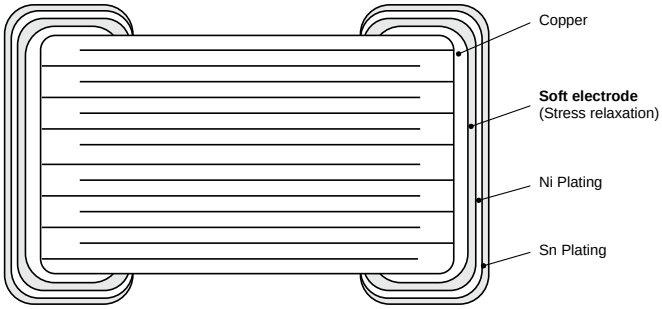

Dimensions

Discrete capacitors - Soft termination

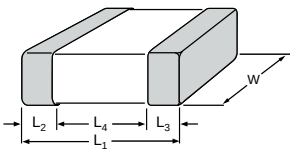

Case size designation		Dimensions in mm				
Inch-based	Metric	L1	W	L2 / L3 min	L2 / L3 max	L4 min
0603	1608M	1.6 ±0.20	0.8 ±0.15	0.20	0.50	0.40
0805	2012M	2.0 ±0.30	1.25 ±0.20	0.25	0.75	0.55
1206	3216M	3.2 ±0.40	1.6 ±0.20	0.25	0.85	1.40
1210	3225M	3.2 ±0.40	2.5 ±0.30	0.25	0.85	1.40
1812	4532M	4.5 ±0.40	3.2 ±0.20	0.25	0.85	2.20

X7R											
Soft termination											
Capacitance	0603					0805					
	16 V	25 V	50 V	100 V	250 V	50 V	100 V	250 V	500 V	630 V	1000 V
100 pF	0.8 ±0.15	0.8 ±0.15	0.8 ±0.15	0.8 ±0.15							
150 pF						0.6 ±0.15	0.6 ±0.15	0.85 ±0.15	0.85 ±0.15	0.85 ±0.15	0.85 ±0.15
180 pF					0.8 ±0.15						
220 pF											
330 pF											
390 pF											
470 pF											
680 pF											
1.0 nF											
1.5 nF											
2.2 nF											
3.3 nF											
4.7 nF											
6.8 nF											
10 nF											
15 nF								1.25 ±0.2			
18 nF											
22 nF						0.85 ±0.15	0.85 ±0.15				
27 nF											
33 nF						1.25 ±0.2	1.25 ±0.2				
47 nF											
68 nF											
100 nF											
150 nF											
220 nF											
330 nF											
470 nF											
680 nF											
1000 nF											
2.2 µF											
4.7 µF											
10 µF											
22 µF											
47 µF											
100 µF											
Tape width	12 mm										

Note: Values in shaded cells indicate thickness class (unit: mm)

X7R									
	Soft termination								
Capacitance	1206								
	16 V	25 V	50 V	100 V	250 V	500 V	630 V	1000 V	2000 V
100 pF									
150 pF									
180 pF									
220 pF	0.85 ±0.15	0.85 ±0.15	0.85 ±0.15	0.85 ±0.15	0.85 ±0.15	1.25 ±0.2	1.25 ±0.2	1.25 ±0.2	1.25 ±0.2
330 pF									
390 pF									
470 pF									
680 pF									
1.0 nF									
1.5 nF									
2.2 nF									
3.3 nF									
4.7 nF									
6.8 nF									
10 nF									
15 nF									
18 nF									
22 nF					1.25 ±0.2				
27 nF									
33 nF									
47 nF									
68 nF				1.25 ±0.2					
100 nF									
150 nF			1.15 ±0.2						
220 nF									
330 nF		1.15 ±0.2		1.6 ±0.2					
470 nF	1.15 ±0.2								
680 nF									
1000 nF									
2.2 µF									
4.7 µF									
10 µF									
22 µF									
47 µF									
100 µF									
Tape width	12 mm								

Note: Values in shaded cells indicate thickness class (unit: mm)

X7R - Soft termination, 1210/ 1812

X7R										
	Soft termination									
Capacitance	1210					1812				
	16 V	25 V	50 V	100 V	250 V	50 V	100 V	250 V	500 V	630 V
100 pF										
150 pF										
180 pF										
220 pF										
330 pF										
390 pF										
470 pF										
680 pF										
1.0 nF										
1.5 nF	0.85 ±0.15	0.85 ±0.15	0.85 ±0.15	0.85 ±0.15	0.85 ±0.15					
2.2 nF										
3.3 nF						0.85 ±0.15	0.85 ±0.15	1.6 ±0.2	1.25 ±0.2	1.25 ±0.2
4.7 nF										
6.8 nF										
10 nF										
15 nF										
18 nF										
22 nF								1.25 ±0.2		
27 nF										
33 nF						1.25 ±0.2	1.25 ±0.2		1.6 ±0.2	
47 nF			1.15 ±0.2	1.25 ±0.2	1.25 ±0.2					
68 nF								1.6 ±0.2		
100 nF										
150 nF	1.15 ±0.2	1.15 ±0.2				1.6 ±0.2	1.6 ±0.2			
220 nF										
330 nF										
470 nF										
680 nF										
1000 nF										
2.2 µF										
4.7 µF										
10 µF										
22 µF										
47 µF										
100 µF										
Tape width	12mm									

Note: Values in shaded cells indicate thickness class (unit: mm)

X5R - General purpose & High capacitance, 01005 to 1812

Features

- Semi-stable on capacitance and high K
- High volumetric efficiency
- Highly reliable in high temperature application
- High insulation resistance

Temperature characteristic

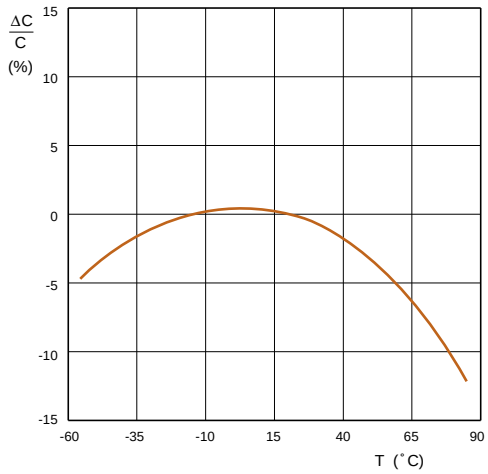

Construction

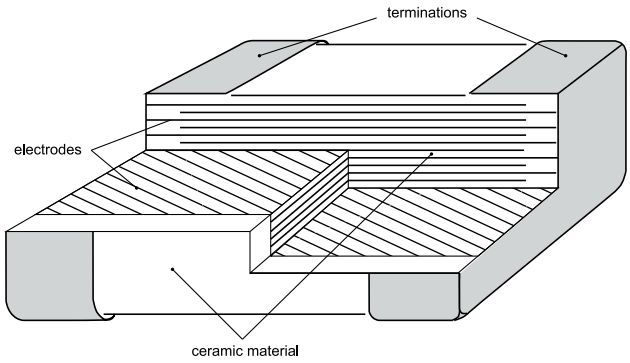

Case dimensions

Discrete capacitors - General purpose & High capacitance

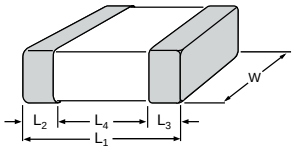

Case size designation		Dimensions in mm				
Inch-based	Metric	L_1	W	L_2 / L_3 min	L_2 / L_3 max	L_4 min
01005	0402M	0.4±0.02	0.2±0.02	0.07	0.14	0.14
0201	0603M	0.6 ±0.03 (1)	0.3 ±0.03 (1)	0.10	0.20	0.20
		0.6 ±0.05 (2)	0.3 ±0.05 (2)	0.10	0.20	0.20
0402	1005M	1.0 ±0.05 (1)	0.5 ±0.05 (1)	0.15	0.30	0.40
		1.0 ±0.20 (2)	0.5 ±0.20 (2)	0.15	0.30	0.40
0603	1608M	1.6 ±0.10 (1)	0.8 ±0.10 (1)	0.20	0.60	0.40
		1.6 ±0.20 (2)	0.8 ±0.20 (2)	0.20	0.60	0.40
0805	2012M	2.0 ±0.10 (1)	1.25 ±0.10 (1)	0.25	0.75	0.55
		2.0 ±0.20 (2)	1.25 ±0.20 (2)	0.25	0.75	0.55
1206	3216M	3.2 ±0.15 (1)	1.6 ±0.15 (1)	0.25	0.75	1.40
		3.2 ±0.30 (2)	1.6 ±0.20 (2)	0.25	0.75	1.40
1210	3225M	3.2 ±0.20 (1)	2.5 ±0.20 (1)	0.25	0.75	1.40
		3.2 ±0.40 (2)	2.5 ±0.30 (2)	0.25	0.75	1.40
1808	4520M	4.5 ±0.40	2.0 ±0.30	0.25	0.75	2.20
1812	4532M	4.5 ±0.20 (1)	3.2 ±0.20 (1)	0.25	0.75	2.20
		4.5 ±0.40 (2)	3.2 ±0.40 (2)	0.25	0.75	2.20

Note: 1. Dimension for size 0201, C < 1 µF; 0402, C < 4.7 µF; 0603, C < 10 µF; 0805 to 1812, C ≤ 100 nF
2. Dimension for size 0201, C ≥ 1 µF; 0402, C ≥ 4.7 µF; 0603, C ≥ 10 µF; 0805 to 1812, C > 100 nF

X5R											
General purpose & High capacitance											
Capacitance	01005	0201					0402				
	6.3 V	6.3 V	10 V	16 V	25 V	50 V	6.3 V	10 V	16 V	25 V	50 V
100 pF	0.2 ±0.02	0.3 ±0.03	0.3 ±0.03	0.3 ±0.03	0.3 ±0.03	0.3 ±0.03	0.5 ±0.05	0.5 ±0.05	0.5 ±0.05	0.5 ±0.05	0.5 ±0.05
150 pF											
220 pF											
330 pF											
470 pF											
680 pF											
1.0 nF											
1.5 nF											
2.2 nF											
3.3 nF											
4.7 nF											
6.8 nF											
10 nF											
15 nF											
22 nF											
33 nF											
47 nF											
68 nF											
100 nF	0.2 ±0.02	0.3 ±0.03	0.3 ±0.03	0.3 ±0.03	0.3 ±0.03						
150 nF											
220 nF		0.3 ±0.03	0.3 ±0.03							0.5 ±0.05	0.5 ±0.05
330 nF											
470 nF		0.3 ±0.03							0.5 ±0.05	0.5 ±0.05	0.5 ±0.05
680 nF											
1 000 nF		0.3 ±0.05							0.5 ±0.05	0.5 ±0.05	
2.2 µF									0.5 ±0.15		
4.7 µF							0.5 ±0.15	0.5 ±0.15			
10 µF							0.5 ±0.2				
Tape width		8 mm									

Note: Values in shaded cells indicate thickness class (unit: mm)

X5R - General purpose & High capacitance, 0603 / 0805

X5R										
General purpose & High capacitance										
Capacitance	0603					0805				
	6.3 V	10 V	16 V	25 V	50 V	6.3 V	10 V	16 V	25 V	50 V
100 pF	0.8 ±0.1	0.8 ±0.1	0.8 ±0.1	0.8 ±0.1	0.8 ±0.1					
150 pF										
220 pF						0.6 ±0.1	0.6 ±0.1	0.6 ±0.1	0.6 ±0.1	0.6 ±0.1
330 pF										
470 pF										
680 pF										
1.0 nF										
1.5 nF										
2.2 nF										
3.3 nF										
4.7 nF										
6.8 nF										
10 nF										
15 nF										
22 nF										
33 nF										
47 nF						0.85 ±0.1	0.85 ±0.1	0.85 ±0.1	0.85 ±0.1	0.85 ±0.1
68 nF										
100 nF										
150 nF										
220 nF										1.25 ±0.2
330 nF						1.25 ±0.2	1.25 ±0.2	1.25 ±0.2	1.25 ±0.2	
470 nF										
680 nF										
1 000 nF										
2.2 µF										
4.7 µF			0.8 ±0.15	0.8 ±0.15						
10 µF	0.8 ±0.15	0.8 ±0.2	0.8 ±0.2	0.8 ±0.2						
22 µF	0.8 ±0.2									
47 µF										
100 µF										
Tape width	8 mm									

Note: Values in shaded cells indicate thickness class (unit: mm)

X5R - General purpose & High capacitance, 1206

X5R					
General purpose & High capacitance					
Capacitance	1206				
	6.3 V	10 V	16 V	25 V	50 V
100 pF					
150 pF					
220 pF	0.85 ±0.1	0.85 ±0.1	0.85 ±0.1	0.85 ±0.1	0.85 ±0.1
330 pF					
470 pF					
680 pF					
1.0 nF					
1.5 nF					
2.2 nF					
3.3 nF					
4.7 nF					
6.8 nF					
10 nF					
15 nF					
22 nF					
33 nF					
47 nF					
68 nF					
100 nF					
150 nF					1.15 ±0.1
220 nF					
330 nF					1.0 ±0.1
470 nF					
680 nF	1.15 ±0.1	1.15 ±0.1	1.15 ±0.1	1.15 ±0.1	1.6 ±0.2
1 000 nF					
2.2 µF					
4.7 µF	1.6 ±0.2	1.6 ±0.2	1.6 ±0.2	1.6 ±0.2	
10 µF					1.6 ±0.3
22 µF				1.6 ±0.3	
47 µF					
100 µF	1.6 ±0.3				
Tape width	8 mm				

Note: Values in shaded cells indicate thickness class (unit: mm)

X5R - High capacitance, 1210 / 1812

X5R						
General purpose & High capacitance						
Capacitance	1210					1812
	6.3 V	10 V	16 V	25 V	50 V	6.3 V
100 pF						
150 pF						
220 pF						
330 pF						
470 pF						
680 pF						
1.0 nF						
1.5 nF						
2.2 nF	0.85 ±0.1	0.85 ±0.1	0.85 ±0.1	0.85 ±0.1	0.85 ±0.1	
3.3 nF						
4.7 nF						
6.8 nF						
10 nF						
15 nF						
22 nF						
33 nF						
47 nF						
68 nF						
100 nF						
150 nF					1.15 ±0.1	
220 nF						
330 nF						
470 nF	1.15 ±0.1	1.15 ±0.1	1.15 ±0.1	1.15 ±0.1	1.25 ±0.2	
680 nF						
1 000 nF	1.25 ±0.2	1.25 ±0.2	1.25 ±0.2	1.25 ±0.2		
2.2 µF	1.9 ±0.2	1.9 ±0.2	1.9 ±0.2	1.9 ±0.2	1.9 ±0.2	
4.7 µF						
10 µF					2.5 ±0.2	
22 µF	2.5 ±0.2	2.5 ±0.2	2.5 ±0.2	2.5 ±0.3		
47 µF						2.5 ±0.2
100 µF	2.5 ±0.3	2.5 ±0.3	2.5 ±0.3			3.2 ±0.3
Tape width	8 mm					

Note: Values in shaded cells indicate thickness class (unit: mm)

Y5V - General purpose & High capacitance, 0201 to 1210

Features

- High volumetric efficiency
- Non-polar construction

Temperature characteristic

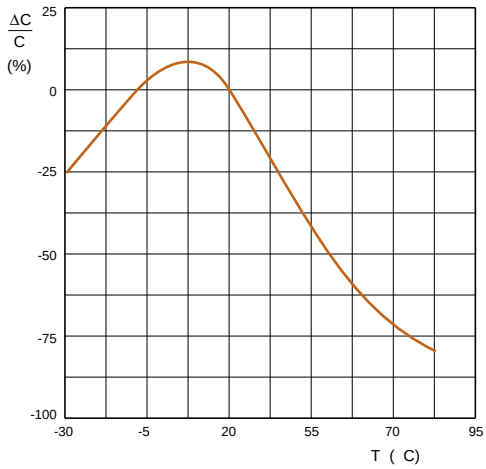

Construction

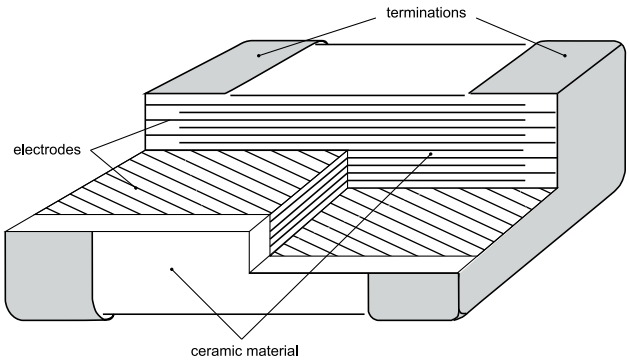

Case dimensions

Discrete capacitors - General purpose & High capacitance

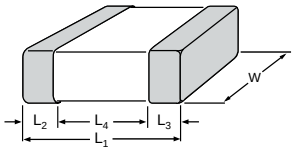

Case size designation		Dimensions in mm				
Inch-based	Metric	L_1	W	L_2 / L_3 min	L_2 / L_3 max	L_4 min
0201	0603M	0.6 ±0.03	0.3 ±0.03	0.10	0.20	0.20
		0.6 ±0.05	0.3 ±0.05	0.10	0.20	0.20
0402	1005M	1.0 ±0.05 (1)	0.5 ±0.05 (1)	0.15	0.30	0.40
		1.0 ±0.20 (2)	0.5 ±0.20 (2)	0.15	0.30	0.40
0603	1608M	1.6 ±0.10 (1)	0.8 ±0.10 (1)	0.20	0.60	0.40
		1.6 ±0.15 (2)	0.8 ±0.15 (2)	0.20	0.60	0.40
0805	2012M	2.0 ±0.10 (1)	1.25 ±0.10 (1)	0.25	0.75	0.55
		2.0 ±0.20 (2)	1.25 ±0.20 (2)	0.25	0.75	0.55
1206	3216M	3.2 ±0.15 (1)	1.6 ±0.15 (1)	0.25	0.75	1.40
		3.2 ±0.30 (2)	1.6 ±0.20 (2)	0.25	0.75	1.40
1210	3225M	3.2 ±0.20 (1)	2.5 ±0.20 (1)	0.25	0.75	1.40
		3.2 ±0.40 (2)	2.5 ±0.30 (2)	0.25	0.75	1.40

Note: 1. Dimension for size 0402, C < 4.7 μF; 0603, C < 10 μF; 0805 to 1210, C ≤ 100 nF
2. Dimension for size 0402, C ≥ 4.7 μF; 0603, C ≥ 10 μF; 0805 to 1210, C > 100 nF

Y5V - General purpose & High capacitance 6.3 to 25V, 0201 / 0402

Y5V					
General purpose & High capacitance					
Capacitance	0201	0402			
	6.3 V	6.3 V	10 V	16 V	25 V
10 nF	0.3 ±0.03	0.5 ±0.05	0.5 ±0.05	0.5 ±0.05	0.5 ±0.05
22 nF					
47 nF					
100 nF					
220 nF					
470 nF					
1 000 nF					
Tape width	8 mm				

Note: Values in shaded cells indicate thickness class (unit: mm)

Y5V - General purpose & High capacitance 6.3 to 25V, 0603 / 0805

Y5V								
General purpose & High capacitance								
Capacitance	0603				0805			
	6.3 V	10 V	16 V	25 V	6.3 V	10 V	16 V	25 V
10 nF	0.8 ±0.1	0.8 ±0.1	0.8 ±0.1	0.8 ±0.1	0.6 ±0.1	0.6 ±0.1	0.6 ±0.1	0.6 ±0.1
22 nF								
47 nF								
100 nF								
220 nF								0.85 ±0.1
470 nF					0.85 ±0.1	0.85 ±0.1	0.85 ±0.1	
1 000 nF								
2.2 µF								1.25 ±0.2
4.7 µF							1.25 ±0.2	
10 µF					1.25 ±0.2	1.25 ±0.2		
22 µF								
Tape width	8 mm							

Note: Values in shaded cells indicate thickness class (unit: mm)

Y5V - General purpose & High capacitance 6.3 to 25V, 1206 / 1210

Y5V								
General purpose & High capacitance								
Capacitance	1206				1210			
	6.3 V	10 V	16 V	25 V	6.3 V	10 V	16 V	25 V
10 nF	0.6 ±0.1	0.6 ±0.1	0.6 ±0.1	0.6 ±0.1				
22 nF								
47 nF								
100 nF								
220 nF								
470 nF	0.85 ±0.1	0.85 ±0.1	0.85 ±0.1	0.85 ±0.1				
1 000 nF								
2.2 µF								
4.7 µF								
10 µF			1.15 ±0.1	1.6 ±0.2	1.5 ±0.1	1.5 ±0.1	1.5 ±0.1	1.5 ±0.1
22 µF	1.6 ±0.2	1.6 ±0.2	1.6 ±0.2		1.6 ±0.2	1.6 ±0.2	1.6 ±0.2	
47 µF								
Tape width	8 mm							

Note: Values in shaded cells indicate thickness class (unit: mm)

Y5V - General purpose & High capacitance 50V, 0402 to 1206

Y5V				
General purpose & High capacitance				
Capacitance	0402	0603	0805	1206
	50 V	50 V	50 V	50 V
10 nF	0.5 ±0.05	0.8 ±0.1	0.6 ±0.1	0.6 ±0.1
22 nF				
47 nF				
100 nF				
220 nF			0.85 ±0.1	
470 nF				0.85 ±0.1
1 000 nF			1.25 ±0.2	
2.2 µF				1.15 ±0.1
Tape width	8 mm			

Note: Values in shaded cells indicate thickness class (unit: mm)

Features

- Comply with AEC-Q200 standard
- MSL class: MSL 1
- J-STD-020D and TS-16949 compliant
- Halogen free epoxy
- RoHS compliant

Applications

- All general purpose applications
- Entertainment applications
- Comfort / security applications
- Information applications

Construction

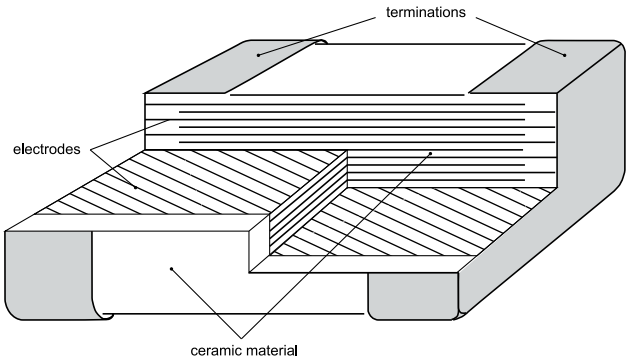

Dimensions

Discrete capacitors - Automotive grade

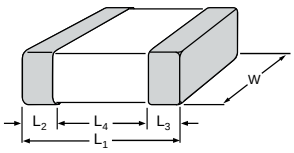

Case size designation		Dimensions in mm				
Inch-based	Metric	L1	W	L2 / L3 min	L2 / L3 max	L4 min
0402	1005M	1.0 ±0.05	0.5 ±0.05	0.15	0.30	0.40
0603	1608M	1.6 ±0.20	0.8 ±0.10	0.20	0.60	0.40
0805	2012M	2.0 ±0.20	1.25 ±0.20	0.25	0.75	0.55
1206	3216M	3.2 ±0.30	1.6 ±0.20	0.25	0.75	1.40
1210	3225M	3.2 ±0.30	2.5 ±0.20	0.25	0.75	1.40

NP0									
Automotive Grade									
Capacitance	0402	0603			0805				
	50 V	50 V	100V	250V	50 V	100 V	250 V	500 V	630 V
10 pF	0.5 ±0.05	0.8 ±0.1	0.8 ±0.1	0.8 ±0.1	0.6 ±0.1	0.6 ±0.1	0.6 ±0.1	0.6 ±0.1	0.6 ±0.1
12 pF									
15 pF									
18 pF									
22 pF									
27 pF									
33 pF									
39 pF									
47 pF									
56 pF									
68 pF									
82 pF									
100 pF									
120 pF									
150 pF									
180 pF									
220 pF							0.85 ±0.1	0.85 ±0.1	0.85 ±0.1
270 pF									
330 pF									
390 pF									
470 pF									
560 pF								1.25 ±0.2	
680 pF									
820 pF									
1 000 pF									
1.2 nF									
1.5 nF									
1.8 nF									
2.2 nF									
2.7 nF									
3.3 nF									
3.9 nF									
4.7 nF									
5.6 nF									
6.8 nF									
8.2 nF									
10 nF									
Tape width	8mm								

Note: Values in shaded cells indicate thickness class (unit: mm)

NP0 - Automotive grade, 1206 / 1210

NP0									
	Automotive Grade								
Capacitance	1206					1210			
	50 V	100 V	250 V	500 V	630 V	50 V	100 V	250 V	500 V
10 pF	0.6 ±0.1	0.6 ±0.1	0.6 ±0.1	0.6 ±0.1	1.25 ±0.2	1.25 ±0.2	1.25 ±0.2	1.25 ±0.2	1.25 ±0.2
12 pF									
15 pF									
18 pF									
22 pF									
27 pF									
33 pF									
39 pF									
47 pF									
56 pF									
68 pF									
82 pF									
100 pF									
120 pF									
150 pF									
180 pF									
220 pF									
270 pF									
330 pF									
390 pF									
470 pF									
560 pF									
680 pF									
820 pF			0.85 ±0.1	0.85 ±0.1					
1 000 pF									
1.2 nF									
1.5 nF									
1.8 nF									
2.2 nF									
2.7 nF									
3.3 nF									
3.9 nF									
4.7 nF									
5.6 nF									
6.8 nF									
8.2 nF									
10 nF									
Tape width	8mm								

Note: Values in shaded cells indicate thickness class (unit: mm)

X7R									
Automotive grade									
Capacitance	0402				0603				
	10 V	16 V	25 V	50 V	10 V	16 V	25 V	50 V	100V
100 pF	0.5 ±0.05	0.5 ±0.05	0.5 ±0.05	0.5 ±0.05	0.8 ±0.1	0.8 ±0.1	0.8 ±0.1	0.8 ±0.1	0.8 ±0.1
150 pF									
180 pF									
220 pF									
330 pF									
390 pF									
470 pF									
680 pF									
1 000 pF									
1.5 nF									
2.2 nF									
3.3 nF									
4.7 nF									
6.8 nF									
10 nF									
15 nF									
18 nF									
22 nF									
27 nF									
33 nF									
47 nF									
68 nF									
100 nF									
150 nF									
220 nF									
270 nF									
330 nF									
390 nF									
470 nF									
680 nF									
1000 nF									
2.2 µF									
4.7 µF									
10 µF									
Tape width	8mm								

Note: Values in shaded cells indicate thickness class (unit: mm)

X7R - Automotive grade, 0805

X7R							
Automotive grade							
Capacitance	0805						
	10 V	16 V	25 V	50 V	100 V	250 V	500 V
100 pF							
150 pF							
180 pF							
220 pF	0.85 ±0.1	0.85 ±0.1	0.85 ±0.1	0.85 ±0.1	0.85 ±0.1	0.85 ±0.1	0.85 ±0.1
330 pF							
390 pF							
470 pF							
680 pF							
1 000 pF							
1.5 nF							
2.2 nF							
3.3 nF							
4.7 nF							
6.8 nF						1.25 ±0.2	1.25 ±0.2
10 nF							
15 nF							
18 nF							
22 nF							
27 nF					1.25 ±0.2		
33 nF							
47 nF							
68 nF							
100 nF							
150 nF	1.25 ±0.2	1.25 ±0.2	1.25 ±0.2	1.25 ±0.2			
220 nF							
270 nF							
330 nF							
390 nF							
470 nF							
680 nF							
1000 nF							
2.2 µF							
4.7 µF							
10 µF							
Tape width	8mm						

Note: Values in shaded cells indicate thickness class (unit: mm)

X7R									
	Automotive grade								
Capacitance	1206								
	6.3 V	10 V	16 V	25V	50V	100V	250 V	500 V	630 V
100 pF									
150 pF									
180 pF									
220 pF	0.85 ±0.1	0.85 ±0.1	0.85 ±0.1	0.85 ±0.1	0.85 ±0.1	0.85 ±0.1	0.85 ±0.1	1.25 ±0.2	1.25 ±0.2
330 pF									
390 pF									
470 pF									
680 pF									
1 000 pF									
1.5 nF									
2.2 nF									
3.3 nF									
4.7 nF									
6.8 nF									
10 nF									
15 nF									
18 nF							1.25 ±0.2		
22 nF									
27 nF									
33 nF									
47 nF									
68 nF						1.25 ±0.2			
100 nF									
150 nF					1.15 ±0.2				
220 nF									
270 nF					1.6 ±0.2	1.6 ±0.2			
330 nF									
390 nF									
470 nF									
680 nF	1.15 ±0.2	1.15 ±0.2	1.15 ±0.2	1.15 ±0.2					
1000 nF									
2.2 µF									
4.7 µF									
10 µF									
Tape width	8mm								

Note: Values in shaded cells indicate thickness class (unit: mm)

X7R - Automotive grade, 1210

X7R								
	Automotive grade							
Capacitance	1210							
	6.3 V	10 V	16 V	25V	50V	100V	250 V	500 V
100 pF								
150 pF								
180 pF								
220 pF								
330 pF								
390 pF								
470 pF								
680 pF								
1 000 pF								
1.5 nF								
2.2 nF	0.85 ±0.1	0.85 ±0.1	0.85 ±0.1	0.85 ±0.1	0.85 ±0.1	0.85 ±0.1	0.85 ±0.1	1.25 ±0.2
3.3 nF								
4.7 nF								
6.8 nF								
10 nF								
15 nF								
18 nF							1.25 ±0.2	
22 nF								
27 nF								
33 nF								
47 nF								
68 nF								
100 nF								
150 nF					1.15 ±0.2	1.25 ±0.2		
220 nF								
270 nF								
330 nF								
390 nF	1.25 ±0.2	1.25 ±0.2	1.25 ±0.2	1.25 ±0.2	1.25 ±0.2			
470 nF								
680 nF								
1000 nF								
2.2 µF								
4.7 µF								
10 µF								
Tape width	12mm							

Note: Values in shaded cells indicate thickness class (unit: mm)

Features

- Capable of operating at high voltage levels
- For high frequency snubber
- Decoupling/ Smoothing function
- TUV certificate No.: 50031668
- UL certificate No.: E238900

Temperature characteristic

NP0

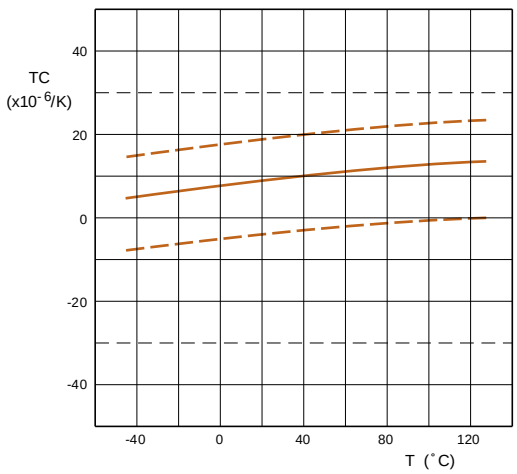

X7R

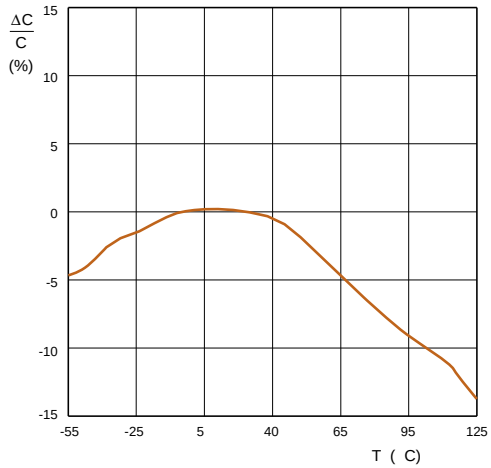

Construction

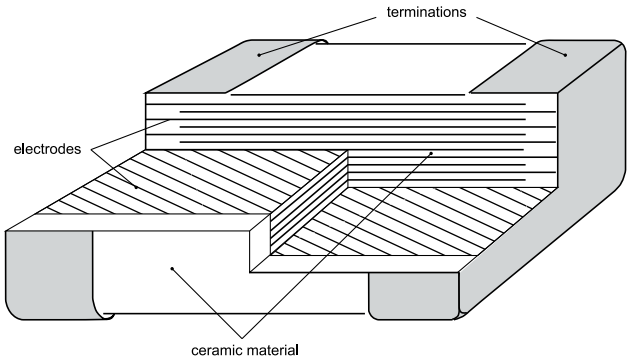

Dimensions

Discrete capacitors - High voltage SC type

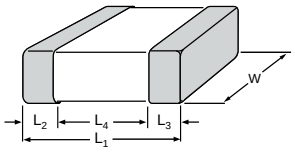

Case size designation		Dimensions in mm			
Inch-based	Metric	L_1	W	L_2 / $L_{3\ min}$	L_2 / $L_{3\ max}$
1808	4520M	4.8 ±0.30	2.0 ±0.30	0.25	0.75
1812	4532M	4.8 ±0.30	3.2 ±0.30	0.25	0.75

NP0 - High voltage SC type, 1808 / 1812

NP0				
Capacitance	1808		1808	1812
	X1/Y2 for TUV	X1/Y2 for UL	X2/Y3 for TUV/UL	X2/Y3 for TUV/UL
2 pF	1.6 ±0.2	1.6 ±0.2		
3.3 pF				
4.7 pF				1.6 ±0.2
5 pF			1.6 ±0.2	
10 pF				
12 pF				
15 pF				
18 pF				
22 pF				
27 pF				
33 pF				
39 pF				
47 pF				
56 pF				
68 pF				
82 pF				
100 pF	2.0 ±0.2	2.0 ±0.2		
120 pF				2.0 ±0.2
150 pF				
180 pF				
220 pF				
240 pF				
270 pF			2.0 ±0.2	
330 pF				
390 pF				
430 pF				
470 pF				
560 pF				
680 pF				
820 pF				
1 000 pF				
Tape width	12 mm			

Note: Values in shaded cells indicate thickness class (unit: mm)

X7R				
Capacitance	1808		1812	
	X1/Y2 for TUV/UL	X2/Y3 for TUV/UL	X1/Y2 for TUV	X1 for UL
150 pF	1.6 ±0.2	1.6 ±0.2		
180 pF				
220 pF			1.6 ±0.2	1.6 ±0.2
240 pF	2.0 ±0.2			
270 pF				
330 pF				
390 pF			2.0 ±0.2	2.0 ±0.2
430 pF				
470 pF				
560 pF				
680 pF		2.0 ±0.2		
820 pF				
1 000 pF				
1.2 nF				
1.5 nF				
Tape width	12 mm			

Note: Values in shaded cells indicate thickness class (unit: mm)

Features

- Less than 50% board space of an equivalent discrete component
- High volumetric efficiency
- Increased throughput, by time saved in mounting

Temperature characteristic

NP0

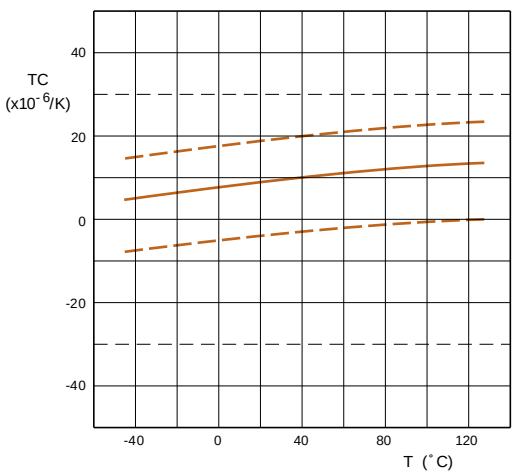

X7R

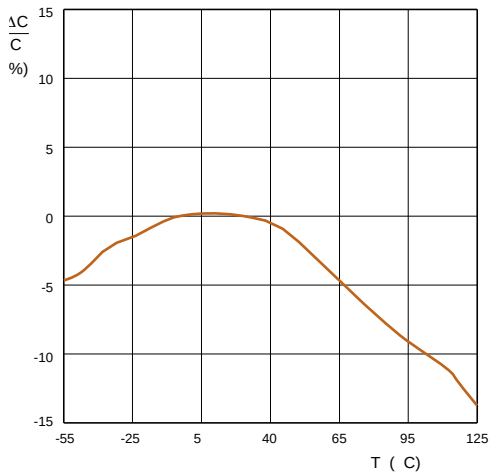

Temperature characteristic

Y5V

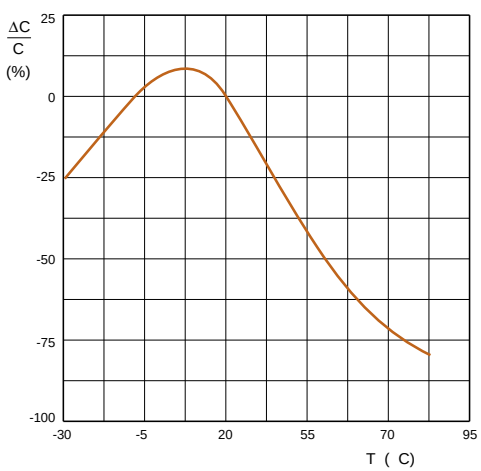

Construction

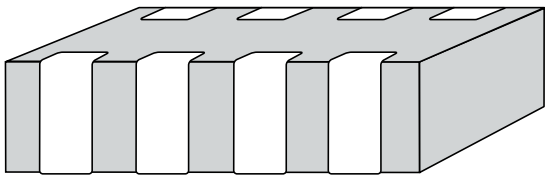

Dimensions

4C arrays

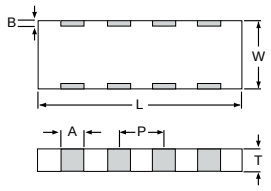

Case size designation		Dimensions in mm						
Inch-based	Metric	L	W	T_{min}	T_{max}	A	B	P
0508 (4 x 0402)	1220M (4 x 1005)	2.0 ±0.15	1.25 ±0.15	0.50	0.70	0.28 ±0.10	0.2 ±0.10	0.5 ±0.10
0612 (4 x 0603)	1632M (4 x 1608)	3.2 ±0.15	1.60 ±0.15	0.70 (1) 0.50 (2)	0.90 (1) 0.70 (2)	0.4 ±0.10	0.3 ±0.20	0.8 ±0.10

Note: 1. Available for NP0 and X7R
2. Available for Y5V

NP0				
4C arrays				
Capacitance	0508		0612	
	50 V	100 V	50 V	100 V
10 pF	0.6 ±0.1	0.6 ±0.1	0.8 ±0.1	0.8 ±0.1
15 pF				
18 pF				
22 pF				
27 pF				
47 pF				
100 pF				
150 pF				
180 pF				
220 pF				
270 pF				
330 pF				
390 pF				
470 pF				
560 pF				
680 pF				
820 pF				
1 000 pF				
Tape width	8 mm			

Note: Values in shaded cells indicate thickness class (unit: mm)

X7R - 4C Arrays, 0508 / 0612

X7R						
4C arrays						
Capacitance	0508			0612		
	16 V	25 V	50 V	16 V	25 V	50 V
180 pF					0.8 ±0.1	0.8 ±0.1
220 pF						
270 pF						
330 pF						
390 pF						
470 pF						
560 pF						
680 pF						
820 pF						
1 000 pF	0.6 ±0.1	0.6 ±0.1	0.6 ±0.1			
1.2 nF						
1.5 nF						
1.8 nF						
2.2 nF						
2.7 nF						
3.3 nF						
3.9 nF						
4.7 nF						
5.6 nF						
6.8 nF						
8.2 nF						
10 nF				0.8 ±0.1		
12 nF						
15 nF						
18 nF						
22 nF						
27 nF						
33 nF						
47 nF						
56 nF						
68 nF						
82 nF						
100 nF						
Tape width	8 mm					

Note: Values in shaded cells indicate thickness class (unit: mm)

Y5V	
4C arrays	
Capacitance	0612
	25 V
10 nF	0.6 ±0.1
22 nF	
47 nF	
100 nF	
Tape width	8 mm

Note: Values in shaded cells indicate thickness class (unit: mm)

Sample kits for 0201 / 0402

0201 sample kits

NP0 50 V	
Capacitance (pF)	Tolerance
1	±0.25 pF
1.2	±0.25 pF
1.5	±0.25 pF
1.8	±0.25 pF
2.2	±0.25 pF
2.7	±0.25 pF
3.3	±0.25 pF
3.9	±0.25 pF
4.7	±0.25 pF
5.6	±0.50 pF
6.8	±0.50 pF
8.2	±0.50 pF
10	±5%
12	±5%
15	±5%
18	±5%
22	±5%

NP0 25 V	
Capacitance (pF)	Tolerance
27	±5%
33	±5%
39	±5%
47	±5%
56	±5%
68	±5%
82	±5%
100	±5%
Y5V 6.3V	
Capacitance (pF)	Tolerance
100 000	-20% to +80%
X5R 6.3V	
Capacitance (pF)	Tolerance
100 000	±10%

X7R 50 V	
Capacitance (pF)	Tolerance
47	±10%
68	±10%
100	±10%
150	±10%
220	±10%
330	±10%
470	±10%
X7R 25 V	
Capacitance (pF)	Tolerance
680	±10%
1 000	±10%
X7R 16V	
Capacitance (pF)	Tolerance
1 500	±10%
2 200	±10%
3 300	±10%
X7R 10 V	
Capacitance (pF)	Tolerance
10 000	±10%

Note: 100 pieces per value. Ordering code CC020100000000000 for Yageo brand product

0402 sample kits

NP0 50 V	
Capacitance (pF)	Tolerance
1	±0.25 pF
1.5	±0.25 pF
2.2	±0.25 pF
3.3	±0.25 pF
4.7	±0.25 pF
6.8	±0.50 pF
10	±5%
15	±5%
22	±5%
33	±5%
47	±5%
68	±5%
100	±5%
150	±5%
220	±5%

Y5V 16 V	
Capacitance (pF)	Tolerance
10 000	±20%
22 000	±20%
47 000	±20%
100 000	±20%
X5R 25V	
Capacitance (pF)	Tolerance
100 000	±10%

X7R 50 V	
Capacitance (pF)	Tolerance
100	±10%
150	±10%
220	±10%
330	±10%
470	±10%
680	±10%
1 000	±10%
1 500	±10%
2 200	±10%
3 300	±10%
X7R 25 V	
Capacitance (pF)	Tolerance
4 700	±10%
100 000	±10%
X7R 16 V	
Capacitance (pF)	Tolerance
6 800	±10%
10 000	±10%
15 000	±10%
22 000	±10%

Note: 95 pieces per value. Ordering code CC040200000000000 for Yageo brand product

0603 sample kits					
NP0 50 V		NP0 25 V		X7R 50 V	
Capacitance (pF)	Tolerance	Capacitance (pF)	Tolerance	Capacitance (pF)	Tolerance
1	±0.25 pF	1 000	±5%	100	±10%
1.5	±0.25 pF	1 500	±5%	150	±10%
2.2	±0.25 pF	Y5V 50 V		220	±10%
3.3	±0.25 pF	Capacitance (pF)	Tolerance	330	±10%
4.7	±0.25 pF	10 000	±20%	470	±10%
6.8	±0.50 pF	22 000	±20%	680	±10%
10	±5%	47 000	±20%	1 000	±10%
15	±5%	100 000	±20%	1 500	±10%
22	±5%	Y5V 16 V		2 200	±10%
33	±5%	Capacitance (pF)	Tolerance	3 300	±10%
47	±5%	220 000	±20%	4 700	±10%
68	±5%	470 000	±20%	6 800	±10%
100	±5%			10 000	±10%
150	±5%			X7R 25 V	
220	±5%			Capacitance (pF)	Tolerance
330	±5%			15 000	±10%
470	±5%			22 000	±10%
680	±5%			X7R 16 V	
				Capacitance (pF)	Tolerance
				33 000	±10%
				47 000	±10%
				68 000	±10%
				100 000	±10%

Note: 48 pieces per value. Ordering code CC060300000000000 for Yageo brand product

0805 sample kits					
NP0 50 V		NP0 25 V		X7R 50 V	
Capacitance (pF)	Tolerance	Capacitance (pF)	Tolerance	Capacitance (pF)	Tolerance
1	±0.25 pF	3 300	±5%	220	±10%
1.5	±0.25 pF	4 700	±5%	330	±10%
2.2	±0.25 pF	Y5V 50 V		470	±10%
3.3	±0.25 pF	Capacitance (pF)	Tolerance	680	±10%
4.7	±0.25 pF	10 000	±20%	1 000	±10%
6.8	±0.50 pF	22 000	±20%	1 500	±10%
10	±5%	47 000	±20%	2 200	±10%
15	±5%	100 000	±20%	3 300	±10%
22	±5%	220 000	±20%	4 700	±10%
33	±5%	Y5V 16 V		6 800	±10%
47	±5%	Capacitance (pF)	Tolerance	10 000	±10%
68	±5%	470 000	±20%	15 000	±10%
100	±5%	1 000 000	±20%	22 000	±10%
150	±5%			33 000	±10%
220	±5%			47 000	±10%
330	±5%			68 000	±10%
470	±5%			100 000	±10%
680	±5%			X7R 16 V	
1 000	±5%			Capacitance (pF)	Tolerance
1 500	±5%			150 000	±10%
2 200	±5%			220 000	±10%
				330 000	±10%
				470 000	±10%

Note: 48 pieces per value. Ordering code CC080500000000000 for Yageo brand product

Sample kits for 1206

1206 sample kits					
NP0 50 V		NP0 25 V		X7R 50 V	
Capacitance (pF)	Tolerance	Capacitance (pF)	Tolerance	Capacitance (pF)	Tolerance
1	±0.25 pF	10 000	±5%	220	±10%
1.5	±0.25 pF	Y5V 50 V		330	±10%
2.2	±0.25 pF	Capacitance (pF)	Tolerance	470	±10%
3.3	±0.25 pF	100 000	±20%	680	±10%
4.7	±0.25 pF	220 000	±20%	1 000	±10%
6.8	±0.50 pF	470 000	±20%	1 500	±10%
10	±5%	1 000 000	±20%	2 200	±10%
15	±5%			3 300	±10%
22	±5%			4 700	±10%
33	±5%			6 800	±10%
47	±5%			10 000	±10%
68	±5%			15 000	±10%
100	±5%			22 000	±10%
150	±5%			33 000	±10%
220	±5%			47 000	±10%
330	±5%			68 000	±10%
470	±5%			100 000	±10%
680	±5%			150 000	±10%
1 000	±5%			220 000	±10%
1 500	±5%			X7R 16 V	
2 200	±5%			Capacitance (pF)	Tolerance
3 300	±5%			330 000	±10%
4 700	±5%			470 000	±10%
6 800	±5%			680 000	±10%
				1 000 000	±10%

Note: 48 pieces per value. Ordering code CC120600000000000 for Yageo brand product

High capacitance sample kits

X5R 0402		
Capacitance	Rated voltage	Tolerance
1 µF	6.3 V	±10%
1 µF	10 V	±10%
2.2 µF	6.3 V	±20%

X5R 0603		
Capacitance	Rated voltage	Tolerance
1 µF	16 V	±10%
1 µF	25 V	±10%
2.2 µF	6.3 V	±10%
2.2 µF	10 V	±10%
2.2 µF	16 V	±10%
4.7 µF	6.3 V	±10%
4.7 µF	10 V	±10%
10 µF	6.3 V	±20%

X5R 0805		
Capacitance	Rated voltage	Tolerance
2.2 µF	25 V	±10%
4.7 µF	6.3 V	±10%
4.7 µF	10 V	±10%
4.7 µF	16 V	±10%
10 µF	6.3 V	±10%
10 µF	10 V	±10%
10 µF	16 V	±10%
22 µF	6.3 V	±20%

X5R 1206		
Capacitance	Rated voltage	Tolerance
4.7 µF	16 V	±10%
4.7 µF	25 V	±10%
10 µF	16 V	±10%
10 µF	25 V	±10%
22 µF	6.3 V	±20%

X7R 0603		
Capacitance	Rated voltage	Tolerance
1 µF	16 V	±10%

X7R 0805		
Capacitance	Rated voltage	Tolerance
1 µF	25 V	±10%
2.2 µF	16 V	±10%
2.2 µF	25 V	±10%

X7R 1206		
Capacitance	Rated voltage	Tolerance
1 µF	25 V	±10%
2.2 µF	25 V	±10%
4.7 µF	25 V	±10%
10 µF	16 V	±10%

Y5V 0402		
Capacitance	Rated voltage	Tolerance
1 µF	6.3 V	-20% to +80%
1 µF	10 V	-20% to +80%

Y5V 0603		
Capacitance	Rated voltage	Tolerance
1 µF	10 V	-20% to +80%
1 µF	16 V	-20% to +80%
2.2 µF	10 V	-20% to +80%
2.2 µF	16 V	-20% to +80%
4.7 µF	6.3 V	-20% to +80%

Y5V 0805		
Capacitance	Rated voltage	Tolerance
1 µF	16 V	-20% to +80%
1 µF	25 V	-20% to +80%
1 µF	50 V	-20% to +80%
2.2 µF	16 V	-20% to +80%
4.7 µF	10 V	-20% to +80%
10 µF	10 V	-20% to +80%

Y5V 1206		
Capacitance	Rated voltage	Tolerance
4.7 µF	16 V	-20% to +80%
10 µF	10 V	-20% to +80%
10 µF	16 V	-20% to +80%
22 µF	16 V	-20% to +80%

Note: 50 pieces per value. Ordering code CC888800000000000 for Yageo brand product

High capacitance sample kits for smart phone

X5R 0201		
Capacitance	Rated voltage	Tolerance
100 nF	6.3 V	±10%
100 nF	10 V	±10%
220 nF	6.3 V	±20%
470 nF	6.3 V	±20%
1 µF	6.3 V	±20%

X5R 0402		
Capacitance	Rated voltage	Tolerance
1 µF	6.3 V	±10%
1 µF	10 V	±10%
1 µF	16 V	±10%
2.2 µF	6.3 V	±20%
4.7 µF	6.3 V	±20%
10 µF	6.3 V	±20%

X5R 0603		
Capacitance	Rated voltage	Tolerance
1 µF	16 V	±10%
1 µF	25 V	±10%
2.2 µF	10 V	±10%
2.2 µF	16 V	±10%
4.7 µF	6.3 V	±10%
4.7 µF	10 V	±10%
10 µF	6.3 V	±20%
22 µF	6.3 V	±20%

X5R 0805		
Capacitance	Rated voltage	Tolerance
2.2 µF	16 V	±10%
2.2 µF	25 V	±10%
4.7 µF	6.3 V	±10%
4.7 µF	10 V	±10%
4.7 µF	16 V	±10%
4.7 µF	25 V	±10%
10 µF	6.3 V	±10%
10 µF	10 V	±10%
10 µF	16 V	±10%
22 µF	6.3 V	±20%
47 µF	6.3 V	±20%

X5R 1206		
Capacitance	Rated voltage	Tolerance
10 µF	16 V	±10%
10 µF	25 V	±10%
22 µF	6.3 V	±10%
47 µF	6.3 V	±20%

Note: 50 pieces per value. Ordering code SP888800000000000 for Yageo brand product

High voltage sample kits for general applications

High voltage sample kits for general applications		
NP0 1206		
Capacitance	Rated voltage	Tolerance
10 pF	1 kV	±5%
100 pF	1 kV	±5%
1 nF	1 kV	±5%
10 pF	2 kV	±5%
100 pF	2 kV	±5%
NP0 1210		
Capacitance	Rated voltage	Tolerance
10 pF	1 kV	±5%
100 pF	1 kV	±5%
1 nF	1 kV	±5%
10 pF	2 kV	±5%
100 pF	2 kV	±5%
NP0 1808		
Capacitance	Rated voltage	Tolerance
10 pF	1 kV	±5%
100 pF	1 kV	±5%
1 nF	1 kV	±5%
10 pF	3 kV	±5%
100 pF	3 kV	±5%
10 pF	2 kV	±5%
100 pF	2 kV	±5%
NP0 1812		
Capacitance	Rated voltage	Tolerance
10 pF	2 kV	±5%
100 pF	2 kV	±5%
1 nF	2 kV	±5%
10 pF	1 kV	±5%
100 pF	1 kV	±5%
1 nF	1 kV	±5%
10 pF	3 kV	±5%
100 pF	3 kV	±5%
X7R 1206		
Capacitance	Rated voltage	Tolerance
10 nF	1 kV	±10%
1 nF	2 kV	±10%
1 nF	1 kV	±10%
X7R 1210		
Capacitance	Rated voltage	Tolerance
1 nF	1 kV	±10%
10 nF	1 kV	±10%
1 nF	2 kV	±10%
X7R 1808		
Capacitance	Rated voltage	Tolerance
10 nF	1 kV	±10%
1 nF	3 kV	±10%
1 nF	1 kV	±10%
1 nF	2 kV	±10%
X7R 1812		
Capacitance	Rated voltage	Tolerance
10 nF	2 kV	±10%
1 nF	1 kV	±10%
10 nF	1 kV	±10%

Note: 50 pieces per value. Ordering code HV777700000000000 for Yageo brand product

High frequency sample kits								
NP0 0201								
Capacitance	Rated voltage	Tolerance	Capacitance	Rated voltage	Tolerance	Capacitance	Rated voltage	Tolerance
0.2pF	25 V	±0.1pF	1.6pF	25 V	±0.1pF	5.0pF	25 V	±0.25pF
0.3pF	25 V	±0.1pF	1.8pF	25 V	±0.1pF	5.6pF	25 V	±0.25pF
0.4pF	25 V	±0.1pF	2.0pF	25 V	±0.1pF	6.0pF	25 V	±0.25pF
0.5pF	25 V	±0.1pF	2.2pF	25 V	±0.1pF	6.2pF	25 V	±0.25pF
0.6pF	25 V	±0.1pF	2.4pF	25 V	±0.1pF	6.8pF	25 V	±0.25pF
0.7pF	25 V	±0.1pF	2.7pF	25 V	±0.1pF	7.0pF	25 V	±0.25pF
0.8pF	25 V	±0.1pF	3.0pF	25 V	±0.1pF	7.5pF	25 V	±0.25pF
0.9pF	25 V	±0.1pF	3.3pF	25 V	±0.1pF	8.0pF	25 V	±0.25pF
1.0pF	25 V	±0.1pF	3.6pF	25 V	±0.1pF	8.2pF	25 V	±0.25pF
1.1pF	25 V	±0.1pF	3.9pF	25 V	±0.1pF	9.0pF	25 V	±0.25pF
1.2pF	25 V	±0.1pF	4.0pF	25 V	±0.1pF	9.1pF	25 V	±0.25pF
1.3pF	25 V	±0.1pF	4.3pF	25 V	±0.1pF	10pF	25 V	±5%
1.5pF	25 V	±0.1pF	4.7pF	25 V	±0.1pF			

Note: 10 pieces per value. Ordering code CQ0201000000SB000 for Yageo brand product

High frequency sample kits								
NP0 0402								
Capacitance	Rated voltage	Tolerance	Capacitance	Rated voltage	Tolerance	Capacitance	Rated voltage	Tolerance
0.2pF	50V	±0.1pF	2.0pF	50V	±0.1pF	6.8pF	50V	±0.25pF
0.3pF	50V	±0.1pF	2.2pF	50V	±0.1pF	7.0pF	50V	±0.25pF
0.4pF	50V	±0.1pF	2.4pF	50V	±0.1pF	7.5pF	50V	±0.25pF
0.5pF	50V	±0.1pF	2.7pF	50V	±0.1pF	8.0pF	50V	±0.25pF
0.6pF	50V	±0.1pF	3.0pF	50V	±0.1pF	8.2pF	50V	±0.25pF
0.7pF	50V	±0.1pF	3.3pF	50V	±0.1pF	9.0pF	50V	±0.25pF
0.8pF	50V	±0.1pF	3.6pF	50V	±0.1pF	9.1pF	50V	±0.25pF
0.9pF	50V	±0.1pF	3.9pF	50V	±0.1pF	10pF	50V	±5%
1.0pF	50V	±0.1pF	4.0pF	50V	±0.1pF	12pF	50V	±5%
1.1pF	50V	±0.1pF	4.3pF	50V	±0.1pF	15pF	50V	±5%
1.2pF	50V	±0.1pF	4.7pF	50V	±0.1pF	18pF	50V	±5%
1.3pF	50V	±0.1pF	5.0pF	50V	±0.25pF	22pF	50V	±5%
1.5pF	50V	±0.1pF	5.6pF	50V	±0.25pF	27pF	50V	±5%
1.6pF	50V	±0.1pF	6.0pF	50V	±0.25pF	33pF	50V	±5%
1.8pF	50V	±0.1pF	6.2pF	50V	±0.25pF			

Note: 10 pieces per value. Ordering code CQ0402000000SB000 for Yageo brand product

Sample kits for high frequency series

High frequency sample kits								
NP0 0603								
Capacitance	Rated voltage	Tolerance	Capacitance	Rated voltage	Tolerance	Capacitance	Rated voltage	Tolerance
0.2pF	250 V	±0.1pF	2.0pF	250 V	±0.1pF	6.8pF	250 V	±0.25pF
0.3pF	250 V	±0.1pF	2.2pF	250 V	±0.1pF	7.0pF	250 V	±0.25pF
0.4pF	250 V	±0.1pF	2.4pF	250 V	±0.1pF	7.5pF	250 V	±0.25pF
0.5pF	250 V	±0.1pF	2.7pF	250 V	±0.1pF	8.0pF	250 V	±0.25pF
0.6pF	250 V	±0.1pF	3.0pF	250 V	±0.1pF	8.2pF	250 V	±0.25pF
0.7pF	250 V	±0.1pF	3.3pF	250 V	±0.1pF	9.0pF	250 V	±0.25pF
0.8pF	250 V	±0.1pF	3.6pF	250 V	±0.1pF	9.1pF	250 V	±0.25pF
0.9pF	250 V	±0.1pF	3.9pF	250 V	±0.1pF	10pF	250 V	±5%
1.0pF	250 V	±0.1pF	4.0pF	250 V	±0.1pF	12pF	250 V	±5%
1.1pF	250 V	±0.1pF	4.3pF	250 V	±0.1pF	15pF	250 V	±5%
1.2pF	250 V	±0.1pF	4.7pF	250 V	±0.1pF	18pF	250 V	±5%
1.3pF	250 V	±0.1pF	5.0pF	250 V	±0.25pF	22pF	250 V	±5%
1.5pF	250 V	±0.1pF	5.6pF	250 V	±0.25pF	27pF	250 V	±5%
1.6pF	250 V	±0.1pF	6.0pF	250 V	±0.25pF	33pF	250 V	±5%
1.8pF	250 V	±0.1pF	6.2pF	250 V	±0.25pF	47pF	250 V	±5%

Note: 10 pieces per value. Ordering code CQ0603000000SB000 for Yageo brand product

High frequency sample kits								
NP0 0805								
Capacitance	Rated voltage	Tolerance	Capacitance	Rated voltage	Tolerance	Capacitance	Rated voltage	Tolerance
0.2pF	250 V	±0.1pF	2.4pF	250 V	±0.1pF	8.2pF	250 V	±0.25pF
0.3pF	250 V	±0.1pF	2.7pF	250 V	±0.1pF	9.0pF	250 V	±0.25pF
0.4pF	250 V	±0.1pF	3.0pF	250 V	±0.1pF	9.1pF	250 V	±0.25pF
0.5pF	250 V	±0.1pF	3.3pF	250 V	±0.1pF	10pF	250 V	±5%
0.6pF	250 V	±0.1pF	3.6pF	250 V	±0.1pF	12pF	250 V	±5%
0.7pF	250 V	±0.1pF	3.9pF	250 V	±0.1pF	15pF	250 V	±5%
0.8pF	250 V	±0.1pF	4.0pF	250 V	±0.1pF	18pF	250 V	±5%
0.9pF	250 V	±0.1pF	4.3pF	250 V	±0.1pF	22pF	250 V	±5%
1.0pF	250 V	±0.1pF	4.7pF	250 V	±0.1pF	27pF	250 V	±5%
1.1pF	250 V	±0.1pF	5.0pF	250 V	±0.25pF	33pF	250 V	±5%
1.2pF	250 V	±0.1pF	5.6pF	250 V	±0.25pF	47pF	250 V	±5%
1.3pF	250 V	±0.1pF	6.0pF	250 V	±0.25pF	56pF	250 V	±5%
1.5pF	250 V	±0.1pF	6.2pF	250 V	±0.25pF	68pF	250 V	±5%
1.6pF	250 V	±0.1pF	6.8pF	250 V	±0.25pF	82pF	250 V	±5%
1.8pF	250 V	±0.1pF	7.0pF	250 V	±0.25pF	100pF	250 V	±5%
2.0pF	250 V	±0.1pF	7.5pF	250 V	±0.25pF			
2.2pF	250 V	±0.1pF	8.0pF	250 V	±0.25pF			

Note: 10 pieces per value. Ordering code CQ0805000000SB000 for Yageo brand product

SMD CERAMIC EMI FILTER CAPACITORS
X2Y® PRODUCTS

Features

- Broadband Filtering and Decoupling: X2Y® is effective up to 10 GHz and frequencies beyond
- Ultra Low ESL: Noise cancellation within X2Y® makes ESL reducing from nanohenry to picohenry levels
- Bypass: Unlike feedthrough capacitors, X2Y® is in bypass, so no DC current limitations
- Matched Y-caps: Two tightly matched line to ground capacitors in one device
- Superior Balance: Temperature and voltage variations balanced of two Y-caps
- Aging Reliability: Aging effects are equal on two Y-caps

Circuit of typical applications

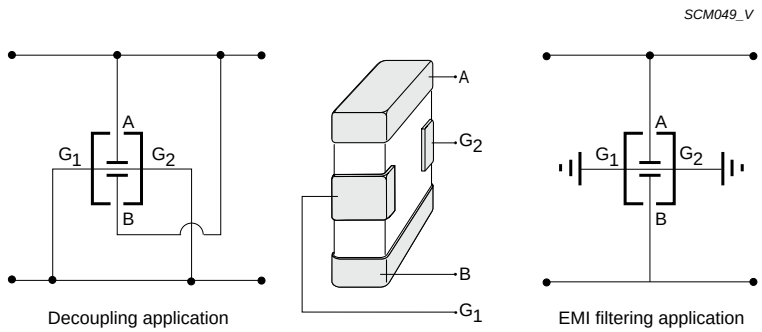

Benefits	Applications
• Fewer Components in Filtering: One X2Y® can replace multiple inductors and/or capacitors • Superior Performance in Filtering: One X2Y® can eliminate both differential and common mode noises • Fewer Components in Decoupling: Up to 1:7 replacement of MLCC in power delivering system bypass networks • Superior Performance in Decoupling: Large or small, X2Y® components exhibit ultra low ESL • Total Cost Savings: Assembly cost savings through reduced component count and placement costs • Board Level Design Advantages: Dramatically reduces via drills, which blocks routing	• EMI filtering on DC motors • Filtered connectors (airbag connectors, RJ-45 connectors) • High speed data-line filtering • Decoupling of supply-lines in high speed digital circuits • Broadband filtering • Amplifier decoupling and EMI suppression • IC Decoupling, on-package, on-PCB • DC power line filtering • Data line filtering • EMI suppression for DC motors • Sensors • Audio

X7R					
Size	Y-Capacitor		Voltage rating (V)	Thickness (mm)	Global part number
	Capacitance (nF)	TOLERANCE (%)			
0603	1	20%	100	0.65	CX 0603 MR X7R 0BB 102
	1	20%	16		CX 0603 MR X7R 7BB 102
	1.5	20%	100		CX 0603 MR X7R 0BB 152
	1.5	20%	50		CX 0603 MR X7R 9BB 152
	2.2	20%	100		CX 0603 MR X7R 0BB 222
	4.7	20%	100		CX 0603 MR X7R 0BB 472
	5.6	20%	100		CX 0603 MR X7R 0BB 562
	5.6	20%	50 / 63		CX 0603 MR X7R 9BB 562
	10	20%	50 / 63		CX 0603 MR X7R 9BB 103
	22	20%	25		CX 0603 MR X7R 8BB 223
	47	20%	16		CX 0603 MR X7R 7BB 473
	56	20%	16		CX 0603 MR X7R 7BB 563
	100	20%	10		CX 0603 MR X7R 6BB 104
	220	20%	10		CX 0603 MR X7R 6BB 224
0805	1	20%	100	0.85	CX 0805 MR X7R 0BB 102
	4.7	20%	100		CX 0805 MR X7R 0BB 472
	10	20%	100		CX 0805 MR X7R 0BB 103
	15	20%	50 / 63		CX 0805 MR X7R 9BB 153
	18	20%	50 / 63		CX 0805 MR X7R 9BB 183
	22	20%	50 / 63		CX 0805 MR X7R 9BB 223
	22	20%	25		CX 0805 MR X7R 8BB 223
	39	20%	25		CX 0805 MR X7R 8BB 393
	47	20%	16		CX 0805 MR X7R 7BB 473
	100	20%	16		CX 0805 MR X7R 7BB 104
	180	20%	10		CX 0805 MR X7R 6BB 184
1206	15	20%	100	1.20	CX 1206 MK X7R 0BB 153
	22	20%	100		CX 1206 MK X7R 0BB 223
	47	20%	50 / 63		CX 1206 MK X7R 9BB 473
	100	20%	50 / 63		CX 1206 MK X7R 9BB 104
	220	20%	16		CX 1206 MK X7R 7BB 224
	390	20%	16		CX 1206 MK X7R 7BB 394
	470	20%	10		CX 1206 MK X7R 6BB 474
1210	100	20%	50	1.60	CX 1210 MK X7R 9BB 104
	220	20%	50		CX 1210 MK X7R 9BB 224
	390	20%	50		CX 1210 MK X7R 9BB 394
	470	20%	25		CX 1210 MK X7R 8BB 474
	560	20%	25		CX 1210 MK X7R 8BB 564
	820	20%	16		CX 1210 MK X7R 7BB 824
	1000	20%	16		CX 1210 MK X7R 7BB 105
1410	390	20%	50	1.30	CX 1410 MK X7R 9BB 394

X5R					
Size	Y-Capacitor		Voltage rating (V)	Thickness (mm)	Global part number
	Capacitance (nF)	TOLERANCE (%)			
0603	220	20%	10	0.65	CX 0603 MR X5R 6BB 224
	330	20%	10		CX 0603 MR X5R 6BB 334
	470	20%	10		CX 0603 MR X5R 6BB 474
	470	20%	6.3		CX 0603 MR X5R 5BB 474

Note: 1. Special values are available on request

Ordering information

NP0					
Size	Y-Capacitor		Voltage rating (V)	Thickness (mm)	Global part number
	Capacitance (nF)	TOLERANCE (%)			
0603	0.01	20%	100	0.85	CX 0603 MR NPO 0BB 100
	0.022		100		CX 0603 MR NPO 0BB 220
	0.033		100		CX 0603 MR NPO 0BB 330
	0.047		100		CX 0603 MR NPO 0BB 470
	0.1		50		CX 0603 MR NPO 9BB 101
	0.22		50		CX 0603 MR NPO 9BB 221
	0.47		50		CX 0603 MR NPO 9BB 471
0805	0.01		50		CX 0805 MR NPO 9BB 100
	0.022		50		CX 0805 MR NPO 9BB 220
	0.047		50		CX 0805 MR NPO 9BB 470

Note: 1. Special values are available on request

Thickness classes and packing quantities		
Thickness Classification (mm)	Quantity per reel	
	8 mm tape width	
	Ø180mm / 7”	
	0603 - 1410	
	Paper	Blister
0.60 ±0.10	4 000	---
0.85 ±0.10	4 000	---
1.20 ±0.15	---	3 000
1.60 ±0.15	---	2 000
1.90 ±0.20	---	2 000

Note: 1. Special values are available on request

Global part number

Ordering example: CX0603MKX7R6BB104

CX 0603 M K X7R 6 B B 104

Series name (code 1-2)
CX = X2Y®-series

Size code (code 3-6)

EIA	mm
0603	(1608M)
0805	(2012M)
1206	(3216M)
1210	(3225M)
1410	(3625M)

Capacitance tolerance (code 7)
M = ±20%

Packing style (code 8)
R = Paper tape reel Ø7"
K = Embossed plastic tape reel Ø7"

TC material (code 9-11)
NP0
X7R
X5R

Capacitance value (code 15-17)
104 = 100 000 pF
(2 significant digits+number of zeros; the 3rd digit signifies the multiplying factor, and letter R is decimal point)
0 = x 1
1 = x 10^1
2 = x 10^2
3 = x 10^3
4 = x 10^4
5 = x 10^5
6 = x 10^6

Process code (code 14)
B = BME

Termination (code 13)
B = Ni-barrier

Rated voltage (code 12)
5 = 6.3 V
6 = 10 V
7 = 16 V
8 = 25 V
9 = 50 V
0 = 100 V

WIRELESS COMPONENTS

Introduction

Yageo produces a comprehensive range of wireless components, inclding metal/PCB/FPCB antenna, patch antenna (ceramic bulk), active antenna (LNA circuit), chip antenna, and RF components (filter/balancer).

Our products cover a wide variety of wireless communication protocols, including Bluetooth & IEEE 802.11b/g, WPAN (Wireless Personal Area Network), WLAN (Wireless Local Area Network), WMAN (Wireless Metropolitan Area Network), WWAN (Wireless Wide Area Network) and LTE (Long Term Evolution).

Wireless Components

Antenna

	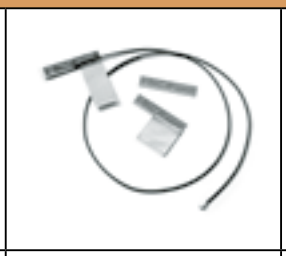			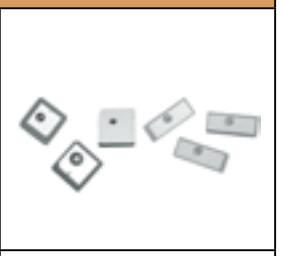
Metal	PCB	FPCB	LTCC / Ceramic	Patch / Ceramic

LTCC Balun/ Filter/ Balun + Filter (Combo) / X2Y

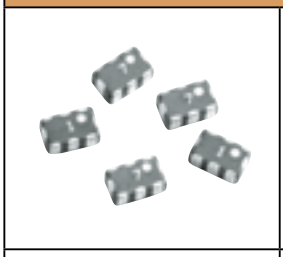				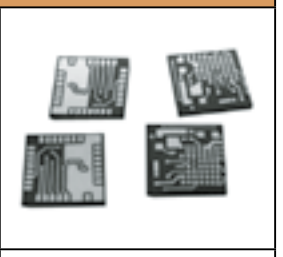
Balun	Filter	Balun + Filter	X2Y Filter	FEM Substrate

Yageo Antenna Portfolio

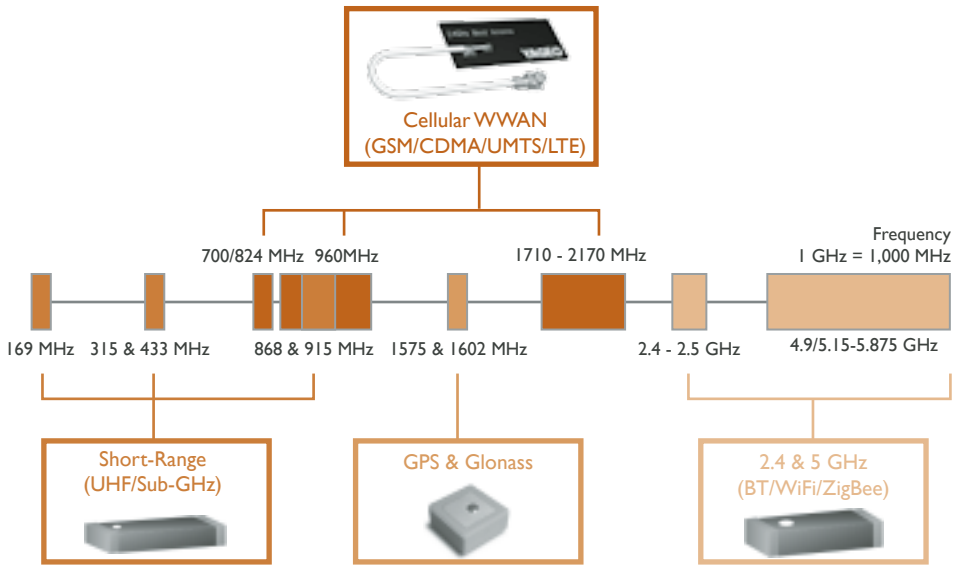

Portable devices, home appliances, industrial/medical equipment will be equipped with wireless connectivity for Peer-to-Peer data exchange. More wireless components are needed.

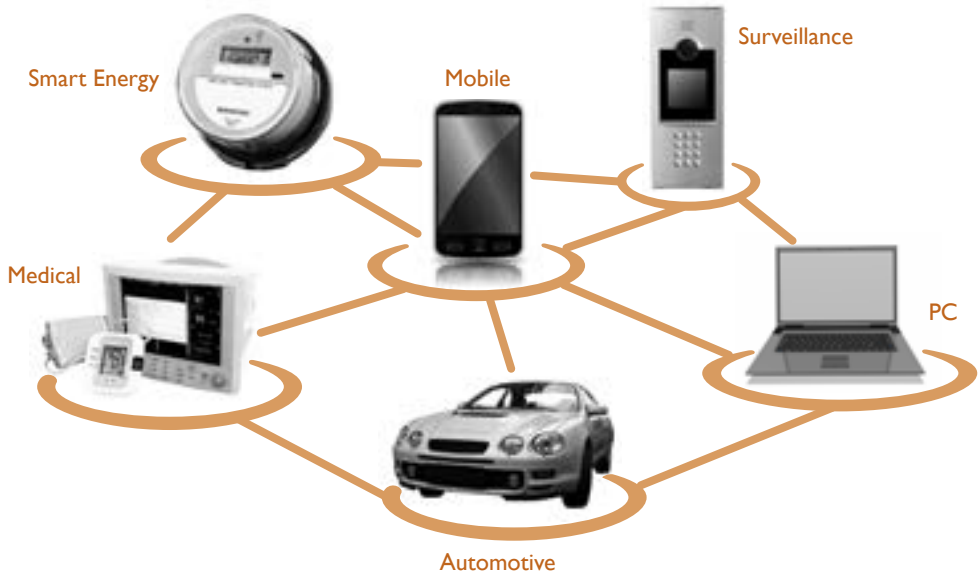

Key features of wireless components
Compact • Maximize performance with the smallest size required • The smallest 2.4/5 GHz antenna: PCB 18.4x7.5 mm / LTCC 2x1.25 mm **Multi-Band & High Efficiency** • WWAN: Quad-band (850/900/1800/1900 MHz) to Penta-band (850/900/1800/1900/2100 MHz) • Support 4G cellular network LTE 700 MHz (Band 12,13,17), 2300/2600 MHz • Multi-band 2.3/2.4/2.7 & 5 GHz supporting WLAN/WiMAX/LTE • Operating in dual navigational systems GPS & Glonass: 1575 – 1602 MHz **High Reliability** • Operating temperature range: -40°C ~ 105°C • Operating humidity 95% RH at 40°C • Vibration verification **Easy Installation** • Reliable adhesive tape, surface mount, and flexible cable/connector selection

2.4 GHz

Model	Part No./ Description	Electrical Data	Mechanical Data
	ANT1204F001R2400A / CAN4311059012451K 1204 2.4GHz PIFA Chip Antenna	**Freq. Range:** 2400~2500 MHz **VSWR*:** 2.0 (Max) **Polarization:** Linear **Peak Gain :** 6.66 dBi(Typ.)	**Size** (mm) **:** 12*4*2.0 **Operating Temp.:** -40 ~ 105°C **RoHS Compliance**
	ANT1004F002R2400A / CAN4311041022451K 1004 2.4GHz PIFA Chip Antenna	**Freq. Range:** 2400~2500 MHz **VSWR*:** 2.0 (Max) **Polarization:** Linear **Peak Gain :** 1.55 dBi(Typ.)	**Size** (mm) **:** 10*4*2.0 **Operating Temp.:** -40 ~ 105°C **RoHS Compliance**
	ANT9520LL06R2400A / CAN4311795062452K 9520 2.4GHz Chip Antenna	**Freq. Range:** 2400~2500 MHz **VSWR*:** 2.5 (Max) **Polarization:** Linear **Peak Gain :** 2.85 dBi(Typ.)	**Size** (mm) **:** 9.5*2.0*1.2 **Operating Temp.:** -40 ~ 105°C **RoHS Compliance**
	ANT8010LL04R2400A / CAN4311781042453K 8010 2.4GHz Chip Antenna	**Freq. Range:** 2400~2500 MHz **VSWR*:** 2.0 (Max) **Polarization:** Linear **Peak Gain :** 5.88 dBi(Typ.)	**Size** (mm) **:** 8.0*1.0*1.0 **Operating Temp.:** -40 ~ 105°C **RoHS Compliance**
	ANT7836A003R2400A / CAN4311278032451K 7836 2.4GHz Chip Antenna	**Freq. Range:** 2400~2500 MHz **VSWR*:** 2.0 (Max) **Polarization:** Linear **Peak Gain :** 3.93 dBi dBi(Typ.)	**Size** (mm) **:** 7.8*3.6*0.5 **Operating Temp.:** -40 ~ 105°C **RoHS Compliance**
	ANT7020LL05R2400A / CAN4311772052452K 7020 2.4GHz Chip Antenna	**Freq. Range:** 2400~2500 MHz **VSWR*:** 2.8 (Max) **Polarization:** Linear **Peak Gain :** 2.62 dBi dBi(Typ.)	**Size** (mm) **:** 7.0*2.0*0.8 **Operating Temp.:** -40 ~ 105°C **RoHS Compliance**
	ANT5320LL45R2400A / CAN4311753452451K 5320 2.4GHz Chip Antenna	**Freq. Range:** 2400~2500 MHz **VSWR*:** 2.0 (Max) **Polarization:** Linear **Peak Gain :** 5.5 dBi dBi(Typ.)	**Size** (mm) **:** 5.3*2.0*1.2 **Operating Temp.:** -40 ~ 105°C **RoHS Compliance**
	ANT5320LL24R2400A / CAN4311753242452K 5320 2.4GHz PIFA Chip Antenna	**Freq. Range:** 2400~2500 MHz **VSWR*:** 2.0 (Max) **Polarization:** Linear **Peak Gain :** 2.78 dBi(Typ.)	**Size** (mm) **:** 5.3*2.0*1.25 **Operating Temp.:** -40 ~ 105°C **RoHS Compliance**
	ANT5010LL04R2400A / CAN4311751042453K 5010 2.4GHz Chip Antenna	**Freq. Range:** 2400~2500 MHz **VSWR*:** 2.8 (Max) **Polarization:** Linear **Peak Gain :** 2.28 dBi(Typ.)	**Size** (mm) **:** 5.0*1.0*1.0 **Operating Temp.:** -40 ~ 105°C **RoHS Compliance**
	ANT3216LL00R2400A / CAN4311712002453K 3216 2.4Ghz Chip Antenna	**Freq. Range:** 2400~2500 MHz **VSWR*:** 2.5 (Max) **Polarization:** Linear **Peak Gain :** 5 dBi(Typ.)	**Size** (mm) **:** 3.2*1.6*1.3 **Operating Temp.:** -40 ~ 105°C **RoHS Compliance**
	ANT3216A063R2400A / CAN4311212632453K 3216 2.4GHz PIFA Chip Antenna	**Freq. Range:** 2400~2500 MHz **VSWR*:** 2.0 (Max) **Polarization:** Linear **Peak Gain :** 1.69 dBi(Typ.)	**Size** (mm) **:** 3.2*1.6*0.5 **Operating Temp.:** -40 ~ 105°C **RoHS Compliance**
	ANT3012LL04R2400A / CAN4311792042453K 3012 2.4GHz Chip Antenna	**Freq. Range:** 2400~2500 MHz **VSWR*:** 2.0 (Max) **Polarization:** Linear **Peak Gain :** 1.84 dBi(Typ.)	**Size** (mm) **:** 3.0*1.2*1.2 **Operating Temp.:** -40 ~ 105°C **RoHS Compliance**

* VSWR depends on the environment

2.4 GHz

Model	Part No./ Description	Electrical Data	Mechanical Data
	ANT2012LL13R2400A / CAN43117141324 54K 2012 2.4GHz PIFA Chip Antenna	**Freq. Range :** 2400~2500 MHz **VSWR*:** 2.0 (Max) **Polarization:** Linear **Peak Gain :** 2.72 dBi(Typ.)	**Size** (mm) **:** 2.0*1.2*1.0 **Operating Temp.:** -40 ~ 105°C **RoHS Compliance**
	ANTX200P001B24003 2.4GHz PCB Antenna - mini	**Freq. Range :** 2400 MHz **VSWR*:** 2.5 (Max) **Polarization:** Linear **Peak Gain :** 4.8 dBi(Typ.)	**Size** (mm) **:** 18.4*7.5*0.55 **Operating Temp.:** -40 ~ 80°C **RoHS Compliance**

2.4 GHz / GPS

Model	Part No./ Description	Electrical Data	Mechanical Data
	ANT1003LL15R1524A / CAN4311756151521K 1003 2.4GHz+GPS PIFA Chip Antenna	**Freq. Range :** 1575 / 2400 MHz **VSWR*:** 2.8 (Max) **Polarization:** Linear **Peak Gain :** 1.15 dBi / 2.90 dBi(Typ.)	**Size** (mm) **:** 10*3*1.5 **Operating Temp.:** -40 ~ 105°C **RoHS Compliance**
	ANT5320LL07R1524A / CAN4311753071522K 5320 2.4GHz+GPS PIFA Chip Antenna	**Freq. Range :** 1575 / 2400 MHz **VSWR*:** 2.0 (Max) **Polarization:** Linear **Peak Gain :** 2.47 dBi / 2.04 dBi(Typ.)	**Size** (mm) **:** 5.3*2.0*1.2 **Operating Temp.:** -40 ~ 105°C **RoHS Compliance**

2.4 / 5 GHz

Model	Part No./ Description	Electrical Data	Mechanical Data
	ANT1003LL05R2455A / CAN4311756052521K 1003 2.4+5GHz Chip Antenna	**Freq. Range :** 2400~2500/ 5150~5875 MHz **VSWR*:** 2.8 (Max) **Polarization:** Linear **Peak Gain :** 2.5 dBi / 2.48dBi(Typ.)	**Size** (mm) **:** 10*3*1.6 **Operating Temp.:** -40 ~ 105°C **RoHS Compliance**
	ANT5320LL04R2455A / CAN4311753042522K 5320 2.4+5GHz Chip Antenna	**Freq. Range :** 2400~2500/ 5150~5875 MHz **VSWR*:** 2.8 (Max) **Polarization:** Linear **Peak Gain :** 2.72 dBi / 3.85dBi(Typ.)	**Size** (mm) **:** 5.3*2.0*1.4 **Operating Temp.:** -40 ~ 105°C **RoHS Compliance**
	ANT5320LL24R2455A / CAN4311753242522K 5320 2.4+5GHz PIFA Chip Antenna	**Freq. Range :** 2400~2500/ 5150~5875 MHz **VSWR*:** 2.8 (Max) **Polarization:** Linear **Peak Gain :** 2.17 dBi / 3.51dBi(Typ.)	**Size** (mm) **:** 5.3*2.0*1.2 **Operating Temp.:** -40 ~ 105°C **RoHS Compliance**
	ANTX100P001B24553 2.4+5GHz PCB Antenna	**Freq. Range :** 2400~2500/ 5150~5875 MHz **VSWR*:** 2.5 (Max) **Polarization:** Linear **Peak Gain :** 5.1dBi(Typ.)	**Size** (mm) **:** 50*10*0.9 **Operating Temp.:** -40 ~ 80°C **RoHS Compliance**

5 GHz

Model	Part No./ Description	Electrical Data	Mechanical Data
	ANT3216LL05R5000A / CAN4311712055003K 3216 5GHz Chip Antenna	**Freq. Range :** 5150~5875 MHz **VSWR*:** 2.0 (Max) **Polarization:** Linear **Peak Gain :** 5.71 dBi(Typ.)	**Size** (mm) **:** 3.2*1.6*1.3 **Operating Temp.:** -40 ~ 105°C **RoHS Compliance**

* VSWR depends on the environment

Cellular WWAN

Model	Part No./ Description	Electrical Data	Mechanical Data
	ANT2112A010B0918A / CAN4313284109181B 2112 Cellular-Band Chip Antenna	**Freq. Range :** 824~960 / 1710~1990 MHz **VSWR*:** 2.0 (Max) **Polarization:** Linear **Peak Gain :** 0.5 ~ 1 dBi(Typ.)	**Size** (mm) **:** 21*12*0.5 **Operating Temp.:** -40 ~ 105°C **RoHS Compliance**
	ANT3505B000TWPENA / CAN4313449009181B 3505 Penta-band Antenna	**Freq. Range :** 824~960 /1710~2170 MHz **VSWR*:** 2.8 / 3.5 (Max) **Polarization:** Linear **Peak Gain :** 2.9 dBi(Typ.)	**Size** (mm) **:** 35*5*6 **Operating Temp.:** -40 ~ 105°C **RoHS Compliance**
	ANT1204LL00R0918A / CAN4311759009181K 1204 Cellular-Band Chip Antenna	**Freq. Range :** 900/1800 MHz **VSWR*:** 3.0 (Max) **Polarization:** Linear **Peak Gain :** N/A	**Size** (mm) **:** 12*4*1.2 **Operating Temp.:** -40 ~ 105°C **RoHS Compliance**
	ANTX100P001BWPEN3 Penta-band PCB Antenna	**Freq. Range :** 824~960 / 1710~2170 MHz **VSWR*:** 2.5 Max (Low Band) 3.5 Max (High Band) **Polarization:** Linear **Peak Gain :** 4.2 dBi(Typ.)	**Size** (mm) **:** 50*20*0.55 **Operating Temp.:** -40 ~ 80°C **Cable*:** Φ1.13 / 100mm **Connector:** I-PEX **Mounting:** Adhesive Tape **RoHS Compliance**

Short-Range

Model	Part No./ Description	Electrical Data	Mechanical Data
	ANT1204LL05R0915A / CAN4311759050911K 1204 915MHz Chip Antenna	**Freq. Range :** 915 MHz **VSWR*:** 2.0 (Max) **Polarization:** Linear **Peak Gain :** 3.32 dBi(Typ.)	**Size** (mm) **:** 12*4*1.6 **Operating Temp.:** -40 ~ 105°C **RoHS Compliance**
	ANT1204LL08R0870A / CAN4311759080871K 1204 870MHz Chip Antenna	**Freq. Range :** 870 MHz **VSWR*:** 2.0 (Max) **Polarization:** Linear **Peak Gain :** 0.5 dBi(Typ.)	**Size** (mm) **:** 12*4*1.6 **Operating Temp.:** -40 ~ 105°C **RoHS Compliance**
	ANT1204LL17R0870A / CAN4311759170871K 1204 870MHz PIFA Chip Antenna	**Freq. Range :** 870 MHz **VSWR*:** 2.8 (Max) **Polarization:** Linear **Peak Gain :** 1.05 dBi(Typ.)	**Size** (mm) **:** 12*4*1.0 **Operating Temp.:** -40 ~ 105°C **RoHS Compliance**
	ANT7020LL05R0870A / CAN4311772050872K 7020 870MHz Chip Antenna	**Freq. Range :** 870 MHz **VSWR*:** 2.0 (Max) **Polarization:** Linear **Peak Gain :** N/A	**Size** (mm) **:** 7.0*2.0*0.7 **Operating Temp.:** -40 ~ 105°C **RoHS Compliance**
	ANT1204F002R0433A / CAN4311059020431K 1204 433MHz Chip Antenna	**Freq. Range :** 315/ 433 MHz **VSWR*:** 2.0 (Max) **Polarization:** Linear **Peak Gain :** 0.79 dBi(Typ.)	**Size** (mm) **:** 12*4*1.6 **Operating Temp.:** -40 ~ 105°C **RoHS Compliance**
	ANT1204LL20R0433A / CAN4311759200431K 1204 433MHz Chip Antenna	**Freq. Range :** 315/ 433 MHz **VSWR*:** 3.0 (Max) **Polarization:** Linear **Peak Gain :** 0.83 dBi(Typ.)	**Size** (mm) **:** 12*4*1.2 **Operating Temp.:** -40 ~ 105°C **RoHS Compliance**
	ANT2405F001R0169A / CAN4311050010162K 2405 169MHz Chip Antenna	**Freq. Range :** 169 MHz **VSWR*:** 2.0 (Max) **Polarization:** Linear **Peak Gain :** N/A	**Size** (mm)**:** 24*5*1.6 **Operating Temp.:** -40 ~ 105°C **RoHS Compliance**

* VSWR depends on the environment
* Cable/Connector is customizable

GPS

Model	Part No./ Description	Electrical Data	Mechanical Data
	ANT8010LL05R1575A / CAN4311781051583K 8010 GPS Chip Antenna	**Freq. Range :** 1575 MHz **VSWR*:** 2.0 (Max) **Polarization:** Linear **Peak Gain:** 0.67 dBi(Typ.)	**Size** (mm): 8.0*1.0*1.0 **Operating Temp.:** -40 ~ 105°C **RoHS Compliance**
	ANT6230LL01R1575A / CAN4311763011582K 6230 GPS Chip Antenna	**Freq. Range :** 1575 MHz **VSWR*:** 2.0 (Max) **Polarization:** Linear **Peak Gain:** 2.52 dBi(Typ.)	**Size** (mm): 6.2*3.0*1.25 **Operating Temp.:** -40 ~ 105°C **RoHS Compliance**
	ANT5320LL14R1575A / CAN4311753141582K 5320 GPS PIFA Chip Antenna	**Freq. Range :** 1575 MHz **VSWR*:** 2.0 (Max) **Polarization:** Linear **Peak Gain:** 3.16 dBi(Typ.)	**Size** (mm): 5.3*2.0*1.2 **Operating Temp.:** -40 ~ 105°C **RoHS Compliance**
	ANT3216LL15R1575A / CAN4311712151583K 3216 GPS PIFA Chip Antenna	**Freq. Range :** 1575 MHz **VSWR*:** 2.0 (Max) **Polarization:** Linear **Peak Gain:** 7.32 dBi(Typ.)	**Size** (mm): 3.2*1.6*1.2 **Operating Temp.:** -40 ~ 105°C **RoHS Compliance**
	ANT1010B00FT1575A / CAN43134200F1581B 10104 GPS Patch Antenna	**Freq. Range :** 1575 MHz **VSWR*:** 2.0 (Max) **Polarization:** RHCP **Peak Gain:** -3 dBic(Typ.)	**Size** (mm): 10*10*4 **Operating Temp.:** -40 ~ 105°C **Mounting:** PIN **RoHS Compliance**
	ANT1212B00BT1575A / CAN43134220B1581B 12124 GPS Patch Antenna	**Freq. Range :** 1575 MHz **VSWR*:** 2.0 (Max) **Polarization:** RHCP **Peak Gain:** -1 dBic(Typ.)	**Size** (mm): 12*12*4 **Operating Temp.:** -40 ~ 105°C Mounting : SMD **RoHS Compliance**
	ANT1212B00DT1575A / CAN43134220D1581B 12124 GPS Patch Antenna	**Freq. Range :** 1575 MHz **VSWR*:** 2.0 (Max) **Polarization:** RHCP **Peak Gain:** -1 dBic(Typ.)	**Size** (mm): 12*12*4 **Operating Temp.:** -40 ~ 105°C **Mounting:** PIN **RoHS Compliance**
	ANT1515B00BT1575A / CAN43134230B1581B 15154 GPS Patch Antenna	**Freq. Range :** 1575 MHz **VSWR*:** 2.0 (Max) **Polarization:** RHCP **Peak Gain:** 1.5 dBic(Typ.)	**Size** (mm): 15*15*4 **Operating Temp.:** -40 ~ 105°C **Mounting:** SMD **RoHS Compliance**
	ANT1515B00DT1575A / CAN43134230D1581B 15154 GPS Patch Antenna	**Freq. Range :** 1575 MHz **VSWR*:** 2.0 (Max) **Polarization:** RHCP **Peak Gain:** 1.5 dBic(Typ.)	**Size** (mm): 15*15*4 **Operating Temp.:** -40 ~ 105°C **Mounting:** PIN **RoHS Compliance**
	ANT1515B00FT1575A / CAN43134230F1581B 15154 GPS Patch Antenna	**Freq. Range :** 1575 MHz **VSWR*:** 2.0 (Max) **Polarization:** RHCP **Peak Gain:** 1.5 dBic(Typ.)	**Size** (mm): 15*15*4 **Operating Temp.:** -40 ~ 105°C **Mounting:** PIN **RoHS Compliance**
	ANT1818B00AT1575A / CAN43134240A1581B 18182 GPS Patch Antenna	**Freq. Range :** 1575 MHz **VSWR*:** 2.0 (Max) **Polarization:** RHCP **Peak Gain:** 2 dBic(Typ.)	**Size** (mm): 18*18*2 **Operating Temp.:** -40 ~ 105°C **Mounting:** SMD **RoHS Compliance**
	ANT1818B00BT1575A / CAN43134240B1581B 18184 GPS Patch Antenna	**Freq. Range :** 1575 MHz **VSWR*:** 2.0 (Max) **Polarization:** RHCP **Peak Gain:** 4 dBic(Typ.)	**Size** (mm): 18*18*4 **Operating Temp.:** -40 ~ 105°C **Mounting:** SMD **RoHS Compliance**

* VSWR depends on the environment

GPS

Model	Part No./ Description	Electrical Data	Mechanical Data
	ANT1818B00CT1575A / CAN43134240C1581B 18182 GPS Patch Antenna	**Freq. Range:** 1575 MHz **VSWR*:** 2.0 (Max) **Polarization:** RHCP **Peak Gain:** 2 dBic(Typ.)	**Size** (mm): 18*18*2 **Operating Temp.:** -40 ~ 105°C **Mounting:** PIN **RoHS Compliance**
	ANT1818B00DT1575A / CAN43134240D1581B 18184 GPS Patch Antenna	**Freq. Range:** 1575 MHz **VSWR*:** 2.0 (Max) **Polarization:** RHCP **Peak Gain:** 4 dBic(Typ.)	**Size** (mm): 18*18*4 **Operating Temp.:** -40 ~ 105°C **Mounting:** PIN **RoHS Compliance**
	ANT1818B00ET1575A / CAN43134240E1581B 18182 GPS Patch Antenna	**Freq. Range:** 1575 MHz **VSWR*:** 2.0 (Max) **Polarization:** RHCP **Peak Gain:** 2 dBic(Typ.)	**Size** (mm): 18*18*2 **Operating Temp.:** -40 ~ 105°C **Mounting:** PIN **RoHS Compliance**
	ANT2525B00AT1575A / CAN43134250A1581B 25252 GPS Patch Antenna	**Freq. Range:** 1575 MHz **VSWR*:** 2.0 (Max) **Polarization:** RHCP **Peak Gain:** 5 dBic(Typ.)	**Size** (mm): 25*25*2 **Operating Temp.:** -40 ~ 105°C **Mounting:** SMD **RoHS Compliance**
	ANT2525B00BT1575A / CAN43134250B1581B 25254 GPS Patch Antenna	**Freq. Range:** 1575 MHz **VSWR*:** 2.0 (Max) **Polarization:** RHCP **Peak Gain:** 5.5 dBic(Typ.)	**Size** (mm): 25*25*4 **Operating Temp.:** -40 ~ 105°C **Mounting:** SMD **RoHS Compliance**
	ANT2525B00CT1575A / CAN43134250C1581B 25252 GPS Patch Antenna	**Freq. Range:** 1575 MHz **VSWR*:** 2.0 (Max) **Polarization:** RHCP **Peak Gain:** 5 dBic(Typ.)	**Size** (mm): 25*25*2 **Operating Temp.:** -40 ~ 105°C **Mounting:** PIN **RoHS Compliance**
	ANT2525B00DT1575A / CAN43134250D1581B 25254 GPS Patch Antenna	**Freq. Range:** 1575 MHz **VSWR*:** 2.0 (Max) **Polarization:** RHCP **Peak Gain:** 5.5 dBic(Typ.)	**Size** (mm): 25*25*4 **Operating Temp.:** -40 ~ 105°C **Mounting:** PIN **RoHS Compliance**
	ANT2525B00ET1575A / CAN43134250E1581B 25252 GPS Patch Antenna	**Freq. Range:** 1575 MHz **VSWR*:** 2.0 (Max) **Polarization:** RHCP **Peak Gain:** 5 dBic(Typ.)	**Size** (mm): 25*25*2 **Operating Temp.:** -40 ~ 105°C **Mounting:** PIN **RoHS Compliance**
	ANT2525B00FT1575A / CAN43134250F1581B 25254 GPS Patch Antenna	**Freq. Range:** 1575 MHz **VSWR*:** 2.0 (Max) **Polarization:** RHCP **Peak Gain:** 5.5 dBic(Typ.)	**Size** (mm): 25*25*4 **Operating Temp.:** -40 ~ 105°C **Mounting:** PIN **RoHS Compliance**
	ANT1606B00DT1575A / CAN43134460D1581B 16064 GPS Patch Antenna	**Freq. Range:** 1575 MHz **VSWR*:** 2.0 (Max) **Polarization:** Linear **Peak Gain:** -0.5 dBic(Typ.)	**Size** (mm): 16*6*4 **Operating Temp.:** -40 ~ 105°C **Mounting:** PIN **RoHS Compliance**
	ANT1004B000R1575A / CAN4311441001581K 10044 GPS Patch Antenna	**Freq. Range:** 1575 MHz **VSWR*:** 2.0 (Max) **Polarization:** Linear **Peak Gain:** 1.61 dBic(Typ.)	**Size** (mm): 10*4*4 **Operating Temp.:** -40 ~ 105°C **Mounting:** SMD **RoHS Compliance**

* VSWR depends on the environment

GPS+Glonass

Model	Part No./ Description	Electrical Data	Mechanical Data
	ANT1818B00BT1516A / CAN43134240B1561B 18184 Gps+Glonass Patch Antenna	**Freq. Range:** 1575 / 1602 MHz **VSWR*:** 2.0 (Max) **Polarization:** Linear **Peak Gain:** 1.89 / 2.59 dBi(Typ.)	**Size** (mm): 18*18*4 **Operating Temp. :** -40 ~ 105°C **Mounting:** SMD **RoHS Compliance**
	ANT1818B00DT1516A / CAN43134240D1561B 18184 Gps+Glonass Patch Antenna	**Freq. Range:** 1575 / 1602 MHz **VSWR*:** 2.0 (Max) **Polarization:** Linear **Peak Gain:** 2.65 / 2.79 dBi (Typ.)	**Size** (mm): 18*18*4 **Operating Temp. :** -40 ~ 105°C **Mounting:** PIN **RoHS Compliance**
	ANT2525B00BT1516A / CAN43134250B1561B 25254 Gps+Glonass Patch Antenna	**Freq. Range:** 1575 / 1602 MHz **VSWR*:** 2.0 (Max) **Polarization:** Linear **Peak Gain:** 3.44 / 4.10 dBi (Typ.)	**Size** (mm): 25*25*4 **Operating Temp. :** -40 ~ 105°C **Mounting:** SMD **RoHS Compliance**
	ANT2525B00DT1516A / CAN43134250D1561B 25254 Gps+Glonass Patch Antenna	**Freq. Range:** 1575 / 1602 MHz **VSWR*:** 2.0 (Max) **Polarization:** Linear **Peak Gain:** 3.5 / 3.8 dBi (Typ.)	**Size** (mm): 25*25*4 **Operating Temp. :** -40 ~ 105°C **Mounting:** PIN **RoHS Compliance**

Active GPS

Model	Part No./ Description	Electrical Data	Mechanical Data
	ANT2525JB08B1575A / CAN4313325081581B 25256.9 GPS Active Antenna	**Freq. Range:** 1575 MHz **VSWR*:** 2.0 (Max) **Polarization:** RHCP **LNA Gain:** 16 dB (Typ.) **Antenna Gain:** 5.5 dBic(Typ.)	**Size** (mm): 25*25*6.9 **Cable*** (mm): 1.13*75 **Operating Temp. :** -30 ~ 85°C **RoHS Compliance**
	ANT1818JB30B1575A / CAN4313324301581B 18187.1 GPS Active Antenna	**Freq. Range:** 1575 MHz **VSWR*:** 2.0 (Max) **Polarization:** RHCP **LNA Gain:** 25 dB (Typ.) **Antenna Gain:** 1.54 dBic(Typ.)	**Size** (mm): 18*18*7.1 **Cable*** (mm): 1.37*100 **Operating Temp. :** -30 ~ 85°C **RoHS Compliance**
	ANT1515JB27B1575A / CAN4313323271581B 15156.5 GPS Active Antenna	**Freq. Range:** 1575 MHz **VSWR*:** 2.0 (Max) **Polarization:** RHCP **LNA Gain:** 20.5 dB (Typ.) **Antenna Gain:** 1.0 dBic(Typ.)	**Size** (mm): 15*15*6.5 **Cable*** (mm): 1.13*100 **Operating Temp. :** -30 ~ 85°C **RoHS Compliance**
	ANT1212JB27B1575A / CAN4313322271581B 12126.5 GPS Active Antenna	**Freq. Range:** 1575 MHz **VSWR*:** 1.5 (Max) **Polarization:** RHCP **LNA Gain:** 25 dB (Typ.) **Antenna Gain:** -0.16 dBic(Typ.)	**Size** (mm): 12*12*6.5 **Cable* (mm):** 1.13*60 **Operating Temp. :** -30 ~ 85°C **RoHS Compliance**
	ANT1606JB12B1575A / CAN4313346121581B 20066.4 GPS Active Antenna	**Freq. Range:** 1575 MHz **VSWR*:** 2.0 (Max) **Polarization:** Linear **LNA Gain:** 20 dB (Typ.) **Antenna Gain:** 0.35 dBi (Typ.)	**Size** (mm): 20*6*6.4 **Cable* (mm):** 1.37*93 **Operating Temp. :** -30 ~ 85°C **RoHS Compliance**

Active GPS+Glonass

Model	Part No./ Description	Electrical Data	Mechanical Data
	ANT8010JLC1B1516A / CAN4313981C11561B 22061.9 GPS+Glonass Active Antenna	**Freq. Range:** 1575/1602 MHz **VSWR*:** 2.0 (Max) **Polarization:** Linear **LNA Gain:** 20 / 20 dB (Typ.) **Antenna Gain:** 5.88 dBi(Typ.)	**Size** (mm): 22*6*1.9 **Cable* (mm):** 1.13*100 **Operating Temp. :** -30 ~ 85°C **RoHS Compliance**

* VSWR depends on the environment
* Cable/Connector is customizable

FM

Model	Part No./ Description	Electrical Data	Mechanical Data
	ANT2405F001R0098A / CAN4311050010882K 2405 FM Chip Antenna	**Freq. Range :** 88 MHz **VSWR*:** 2.0 (Max) **Polarization:** Linear **Peak Gain :** N/A	**Size** (mm)**:** 24*5*1.6 **Operating Temp.:** -40 ~ 105°C **RoHS Compliance**
	ANT1105LF00R0098A / CAN4311858000882K 1105 FM (Ferrite) Chip Antenna	**Freq. Range :** 88 MHz **VSWR*:** 2.0 (Max) **Polarization:** Linear **Peak Gain :** N/A	**Size** (mm)**:** 11*5*1.3 **Operating Temp.:** -40 ~ 105°C **RoHS Compliance**

SDARS

Model	Part No./ Description	Electrical Data	Mechanical Data
	ANT2525B00DT2300A / CAN43134250D2301B 25254 SDARS Patch Antenna	**Freq. Range :** 2320~2345 MHz **VSWR*:** 2.0 (Max) **Polarization:** LHCP **Peak Gain :** 6 dBic(Typ.)	**Size (mm):**25*25*4 **Operating Temp.:** -40 ~ 105°C **Mounting:** PIN **RoHS Compliance**

1.88~2.1 GHz

Model	Part No./ Description	Electrical Data	Mechanical Data
	ANT8868LL00R1880A / CAN4311788001881K 8868 DECT Chip Antenna	**Freq. Range :** 1880~2000 MHz **VSWR*:** 2.0 (Max) **Polarization:** Linear **Peak Gain:** 6.13 dBi(Typ.)	**Size** (mm)**:** 8.8*6.8*0.9 **Operating Temp.:** -40 ~ 105°C **RoHS Compliance**

* VSWR depends on the environment

Filter (BPF)

Model	Part No./ Description	Electrical Data		Mechanical Data
	BPF2012LL05R2400A / CFL4111714052454K 2012 2.4G BPF Type05, H.R.3.2G	**Freq. Range:** 2400-2500MHz **Insertion Loss:** 2.0dB (Max) **VSWR*:** 2.0 (Max)	**Attenuation:** 24dB Min @ 3200MHz 30dB Min @ 4800~5000MHz 20dB Min @ 7200~7500MHz	**Size**(mm): 2.0*1.2*0.9 **Operating Temp.:** -40~85°C **RoHS Compliance**
	BPF2012LL22R2400A / CFL4111714222454K 2012 2.4G BPF Type22, H.R.2.1G	**Freq. Range:** 2400-2500 MHz **Insertion Loss:** 2.5 dB (Max.) **VSWR*:** 2.0 (Max)	**Attenuation:** 30dB Min @ 824~915 MHz 32dB Min @ 1920~1980 MHz 16dB Min @ 2110~2170 MHz 35dB Min @ 4800~5000 MHz 23dB Min @ 7200~7500 MHz	**Size**(mm): 2.0*1.2*0.5 **Operating Temp.:** -40~85°C **RoHS Compliance**
	BPF2012LM17R2400A / CFL4111514172454K 2012 2.4G BPF Type17, H.R.2.1G	**Freq. Range:** 2400-2500 MHz **Insertion Loss:** 2.6dB (Max.) **VSWR*:** 2.0 (Max)	**Attenuation:** 40dB Min @ 880~960 MHz 40dB Min @ 1710~1990 MHz 20dB Min @ 2110~2170 MHz 30dB Min @ 4800~5000 MHz 30dB Min @ 7200~7500 MHz	**Size**(mm): 2.0*1.2*0.9 **Operating Temp.:** -25~85°C **RoHS Compliance**
	BPF2012LM47R2400A / CFL4111514472454K 2012 2.4G BPF Type47, H.R.2.1G	**Freq. Range:** 2400-2500MHz **Insertion Loss:** 1.8dB (Max) **VSWR*:** 2.0 (Max)	**Attenuation:** 30dB Min @ 824~915 MHz 30dB Min @ 1545~1605 MHz 35dB Min @1710~1990 MHz 30dB Min @2170 MHz 30dB Min @ 4800~5000 MHz 25dB Min @ 7200~7500 MHz	**Size**(mm): 2.0*1.2*0.8 **Operating Temp.:** -40~85°C **RoHS Compliance**
	BPF2012LM09R2400A / CFL4111514092454K 2012 2.4G BPF Type09	**Freq.Range:** 2400-2500MHz **Insertion Loss:** 1.2dB (Max) **VSWR*:** 2.0 (Max)	**Attenuation:** 15dB Min @1600MHz 25dB Min @3200MHz 20dB Min @4800~5000MHz	**Size**(mm): 2.0*1.2*0.9 **Operating Temp.:** -40~85°C **RoHS Compliance**
	BPF2012LL01R5000A / CFL4111714015004K 2012 5G BPF Type01	**Freq. Range:** 4900-5950 MHz **Insertion Loss:** 1.5dB (Max) **VSWR*:**2.0 (Max)	**Attenuation:** 30dB Min@1280~3000MHz 25dBMin@ 3300~4000MHz 25dBMin@ 9800~11900MHz	**Size**(mm): 2.0*1.2*1 **Operating Temp.:** **RoHS Compliance**
	BPF2012LL05R5000A / CFL4111714055004K 2012 5G BPF Type05	**Freq. Range:** 5150-5850 MHz **Insertion Loss:** 1.8dB (Max) **VSWR*:** 2.0 (Max)	**Attenuation:** 30dB Min @ 2400~2500MHz 20dB Min @ 4700MHz	**Size**(mm): 2.0*1.2*0.8 **Operating Temp.:** -40~85°C **RoHS Compliance**
	BPF1608LM02R2400A / CFL4111515022454K 1608 2.4G BPF Type02	**Freq. Range:** 2400-2500 MHz **Insertion Loss:** 1.7 dB (Max) **VSWR*:** 2.0 (Max)	**Attenuation:** 30dB Min @ 880~960 MHz 20dB Min @ 1710~1990 MHz 8.5dB Min@ 2170 MHz 20dB Min @ 4800~5000 MHz 25dB Min @ 7200~7500 MHz	**Size**(mm): 1.6*0.8*0.6 **Operating Temp.:** -40~85°C **RoHS Compliance**
	BPF1608LM07R2400A / CFL4111515072454K 1608 2.4G BPF Type07	**Freq. Range:** 2400-2500 MHz **Insertion Loss:** 3.2 dB (Max.) **VSWR*:** 2.0 (Max)	**Attenuation:** 40dB Min @ 880~915 MHz 38dB Min @ 1710~1850 MHz 40dB Min @ 1850~1910 MHz 40dB Min @ 1920~1990 MHz 35dB Min @ 2110~2170 MHz 30dB Min @ 4800~5000 MHz 30dB Min @ 7200~7500 MHz	**Size**(mm): 1.6*0.8*0.6 **Operating Temp.:** -40~85°C **RoHS Compliance**

* VSWR depends on the environment

Filter (BPF)

Model	Part No./ Description	Electrical Data		Mechanical Data
	BPF1608LM17R2400A / CFL4111515172454K 1608 2.4G BPF Type17	**Freq. Range:** 2400-2500 MHz **Insertion Loss:** 2.7 dB (Max.) **VSWR*:** 2.0 (Max)	**Attenuation:** 38dB Min @ 880~915 MHz 35dB Min @ 1710~1850 MHz 35dB Min @ 1850~1910 MHz 35dB Min @ 1920~1990 MHz 25dB Min @ 2110~2170 MHz 30dB Min @ 4800~5000 MHz 30dB Min @ 7200~7500 MHz	**Size**(mm): 1.6*0.8*0.6 **Operating Temp.:** -40~85°C **RoHS Compliance**
	BPF1608LM11R2400A / CFL4111515112454K 1608 2.4G BPF Type11	**Freq. Range:** 2400-2500 MHz **Insertion Loss:** 1.8 dB (Max.) **VSWR*:** 2.0 (Max)	**Attenuation:** 20dB Min @ 1710~1990 MHz 6.5dB Min @ 2110~2170 MHz 25dB Min @ 4800~5000 MHz 20dB Min @ 7200~7500 MHz	**Size**(mm): 1.6*0.8*0.6 **Operating Temp.:** -40~85°C **RoHS Compliance**
	BPF1608LM37R2400A / CFL4111515372454K 1608 2.4G BPF Type37	**Freq. Range:** 2400-2500 MHz **Insertion Loss:** 2.8 dB (Max.) **VSWR*:** 2.0 (Max)	**Attenuation:** 38dB Min @ 880~915 MHz 35dB Min @ 1710~1850 MHz 35dB Min @ 1850~1910 MHz 35dB Min @ 1920~1990 MHz 30dB Min @ 2110~2170 MHz 35dB Min @ 4800~5000 MHz 25dB Min @ 7200~7500 MHz	**Size**(mm): 1.6*0.8*0.6 **Operating Temp.:** -40~85°C **RoHS Compliance**

Filter (LPF)

Model	Part No./ Description	Electrical Data		Mechanical Data
	LPF1608LL53R2400A / CFL4111715532454K 1608 2.4G LPF Type53	**Freq. Range:** 2400-2500 MHz **Insertion Loss:** 0.48dB (Max) **VSWR*:** 1.5 (Max)	**Attenuation:** 35dB Min @ 4800~5000 MHz 27dB Min @ 7200~7500 MHz	**Size**(mm): 1.6*0.8*0.65 **Operating Temp.:** -40~85°C **RoHS Compliance**

Filter (Diplexer)

Model	Part No./ Description	Electrical Data		Mechanical Data
	DPX2012LL85R2455A / CFL4111714852524K 2012 2.4/5GHz Diplexer Type85	**Freq. Range:** 2400-2500MHz/ 4900-5900MHz **Insertion Loss:** Low : 0.7dB/ High: 0.9dB **VSWR*:** 2.0 (Max)	**Attenuation:** 20dB Min @ 4900~5900 MHz 20dB Min @ 2400~2500 MHz	**Size**(mm): 2.0*1.2*0.85 **Operating Temp.:** -40~85°C **RoHS Compliance**
	DPX2012LL89R2455A / CFL4111714892524K 2012 2.4/5GHz Diplexer Type89	**Freq. Range:** 2400-2500MHz/ 4900-5950MHz **Insertion Loss:** Low : 0.5dB/ High: 0.65dB **VSWR*:** 2.0 (Max)	**Attenuation:** 20dB Min.,2f0@4800~5000 MHz 20dB Min.,3f0@7200~7500 MHz 20dB Min. @ 824~915 MHz 20dB Min. @1800~2500 MHz 10dB Ref.,2f0@9800~11900 MHz	**Size**(mm): 2.0*1.2*0.5 **Operating Temp.:** -40~85°C **RoHS Compliance**

* VSWR depends on the environment

Balun

Model	Part No./ Description	Electrical Data		Mechanical Data
	BLN1608LL01R5000A/ CBA47117150 15004K 1608 5G Balun Type01, 50100	**Freq. Range:** 4900-5950MHz **Insertion Loss:** 1.2 dB (Max) **VSWR*:** 2.0 (Max)	**Unbalanced Impedance:** 50Ω **Balanced Impedance:** 100Ω **Phase Difference:** 180 ±10 degree **Amplitude Difference:** 1.5 dB (Max)	**Size**(mm): 1.6*0.8*0.65 **Operating Temp.:** -40~85°C **RoHS Compliance**
	BLN1608LL00R2400A/ CBA47117150 02454K 1608 2.4G Balun Type00, 5050	**Freq. Range:** 2400-2500MHz **Insertion Loss:** 1.2 dB (Max) **VSWR*:** 2.0 (Max)	**Unbalanced Impedance:** 50Ω **Balanced Impedance:** 50Ω **Phase Difference:** 180 ±10 degree **Amplitude Difference:** 1 dB (Max)	**Size**(mm): 1.6*0.8*0.65 **Operating Temp.:** -40~85°C **RoHS Compliance**
	BLN1608LL01R2400A/ CBA47117150 12454K 1608 2.4G Balun Type01, 50100	**Freq. Range:** 2400-2500MHz **Insertion Loss:** 1.1 dB (Max) **VSWR*:** 2.0 (Max)	**Unbalanced Impedance:** 50Ω **Balanced Impedance:** 100Ω **Phase Difference:** 180 ±10 degree **Amplitude Difference:** 2 dB (Max)	**Size**(mm): 1.6*0.8*0.65 **Operating Temp.:** -40~85°C **RoHS Compliance**

Balance Filter (Combo)

Model	Part No./ Description	Electrical Data		Mechanical Data
	BLF2012LL98R2400A/ CBA47117149 82454K 2012 2.4G Combo Type98	**Freq. Range:** 2400-2500MHz **Insertion Loss:** 3.5dB (Max) **VSWR*:** 2.0 (Max) **Unbalanced Impedance:** 50Ω **Balanced Impedance:** Conjugate match to CSR BC03/04 series **Phase Difference:** 180 ±5 degree @25°C **Amplitude Balance:** 1.0 dB (Max)	**Attenuation:** 40dB Min@880~960MHz 25dB Min@1300~1600MHz 35dB Min@4800~5000MHz 30dB Min@7200~7500MHz	**Size**(mm): 2.0*1.2*0.9 **Operating Temp.:** -40~85°C **RoHS Compliance**
	BLF2012LM37R2400A/ CBA47115143 72454K 2012 2.4G Combo Type37	**Freq. Range:** 2400-2500MHz **Insertion Loss:** 2.8 dB (Max) **VSWR*:** 2.0 (Max) **Unbalanced Impedance:** 50Ω **Balanced Impedance:** Conjugate match to CSR BC04/05/06 series **Phase Difference:** 180 ±10 degree @25°C **Amplitude Balance:** 1.5 dB (Max)	**Attenuation:** 35dB Min@880~960MHz 30dB Min@1710~1880MHz 20dB Min@1880~1990MHz 30dB Min@4800~5000MHz	**Size**(mm): 2.0*1.2*0.8 **Operating Temp.:** -40~85°C **RoHS Compliance**
	BLF2012LM31R2400A/ CBA47115143 12454K 2012 2.4G Combo Type31	**Freq. Range:** 2400-2500MHz **Insertion Loss:** 3.1dB (Max) **VSWR*:** **Unbalanced Impedance:** 50Ω **Balanced Impedance:** Conjugate match to MTK MT6616 series **Phase Difference:** 180 ±10 degree @25°C **Amplitude Balance:** 1.5 dB (Max)	**Attenuation:** 35dB Min@880~960MHz 30dB Min@1710~1880MHz 20dB Min@1880~1990MHz 30dB Min@4800~5000MHz	**Size**(mm): 2.0*1.2*0.8 **Operating Temp.:** -40~85°C **RoHS Compliance**

* VSWR depends on the environment

Explanation of ordering code - New

Ordering example : ANT3216A063R2400A

ANT 3216 A 063 R 2400 A

Product Type (code 1)

ANT: Antenna
BPF: Band-Pass Filter
LPF: Low-Pass Filter
BLN: Balun
BLF: Balun Filter
DPX: Diplexer

(1) Size (mm) - SMD (LTCC) (code 2)

3216: 3.2 x 1.6 mm
2012: 2.0 x 1.2 mm
2520: 2.5 x 2.0 mm

(2) Connector - Cable length (mm) Stand-alone (code 2)

Ex: X100 – IPEX connector, 100 mm cable length
X: IPEX, M: MMCX, S: SMA, Z: Stripped
100: 100 mm cable length

Type (code 3)

L, F, A: Chip antenna / Filter / Balun
B: Bulk antenna
P: PCB
X: FPCB
S: Metal
E: External
J: Integrated antenna

Factory Control Code / Cable Type (code 7)

Frequency Band (MHz)(code 6)

2400: 2.4 – 2.5 GHz;
2455: 2.4&5 GHz
1575: GPS; 1516: GPS+Glonass
0433: 433 MHz
0870: 868 MHz
0918: 900/1800 MHz
WQUD: 850/900/1800/1900 MHz
WPEN: 850/900/1800/1900/2100 MHz

Packing Style (code 5)

R: Tape & Reel
T: Tray
B: Bulk

Serial No. (code 4)

Explanation of ordering code - Antenna (old)

Ordering example : CAN4311792042453K

CAN43 11 7 92 04 245 3K

Series name (code 1)
CAN43 = Antenna products

Packing Style (code 2)
11=Reel

Material (code 3)

Size (code 4)

Packing Quantity (code 7)
3K = 3,000 pcs per reel

Working Frequency (code 6)
245 = 2.4 ~ 2.5 GHz

Antenna Type (code 5)

Explanation of ordering code - Filter / Diplexer / Balun / Combo (old)

Ordering example : CFL4X11714002453K

CFL4X 11 7 14 00 245 3K

Product Family (code 1)
CFL41= Filter & Diplexer
CBA47= Balun & Combo

Packing Style (code 2)
11=Tape
13=Bulk

Material (code 3)

Size (mm) (code 4)
11 = 3.2*2.5
12 = 3.2*1.6
13 = 2.5*2.0
14 = 2.0*1.2
15 = 1.6*0.8
16 = 1.0*0.5

Packing Quantity (code 7)
3K = 3000 pcs/reel ; plastic
4K = 4000 pcs/reel ; plastic

Working Frequency (code 6)
245 = 2.4-2.5GHz (BT, WLAN)
500 = 5 GHz
350 = 3-3.5GHz (WiMAX)
252 = 2.45/5GHz Dual Band (WLAN)
237 = 2.3-2.7GHz (WiMAX)

Type (code 5)

M2M Application : Antenna
Ordering code ANTSB000000020140

Product Series	PART NUMBER	Frequency Range (MHz)
2.4GHz	ANT1204F001R2400A	2400 - 2500
	ANT8010LL04R2400A	2400 - 2500
	ANT5320LL24R2400A	2400 - 2500
	ANT3216A063R2400A	2400 - 2500
	ANT3216LL00R2400A	2400 - 2500
	ANT2012LL13R2400A	2400 - 2500
	ANTX200P001B24003	2400 - 2500
2.4/5 GHz	ANT5320LL04R2455A	2400 - 2500
		5150 - 5875
	ANT5320LL24R2455A	2400 - 2500
		5150 - 5875
	ANTX100P001B24553	2400 - 2500
		5150 - 5875
	ANTX200P002B24553	2400 - 2500
		5150 - 5875
GPS	ANT6230LL01R1575A	1575
	ANT5320LL14R1575A	1575
	ANT3216LL15R1575A	1575
	ANT1212B00DT1575A	1575
	ANT1515B00FT1575A	1575
	ANT1818B00AT1575A	1575
	ANT2525B00BT1575A	1575
	ANT2525B00FT1575A	1575
GPS& GLONASS	ANT1818B00BT1516A	1575 / 1602
	ANT1818B00DT1516A	1575 / 1602
	ANT2525B00BT1516A	1575 / 1602
	ANT2525B00DT1516A	1575 / 1602
Active GPS	ANT1818JB30B1575A	1575
2.4GHz + GPS	ANT5320LL17R1524A	1575 / 2400
Cellular WWAN	ANT2112A010B0918A	824 - 960
		1710 - 1990
	ANT1204LL00R0918A	900 / 1800
	ANT3505B000TWPENA	824 - 960
		1710 - 2170
	ANTX100P001BWPEN3	824 - 960
		1710 - 2170
Short-Range	ANT2405F001R0169A	169
	ANT1204F002R0433A	315 / 433
	ANT1204LL08R0870A	870
	ANT1204LL05R0915A	915
FM	ANT1105LF00R0098A	88
SDARS	ANT2525B00DT2300A	2320 - 2345

MULTILAYER CHIP VARISTORS

Features

- Excellent clamping voltage
- Excellent energy dissipation capability
- Quick response time (<1n sec)
- Adjustable capacitance values
- High reliability
- High transient current capability
- Symmetrical voltage-current characteristics

Construction

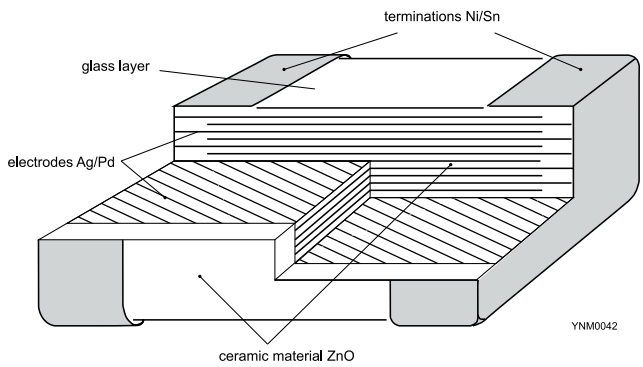

Case dimensions

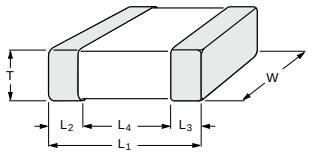

Case size designation	Dimensions in mm					
Inch-based	L_1	W	T	L_2 / $L_{2\,min}$	L_2 / $L_{3\,max}$	$L_{4\,min}$
0402	1.0 ±0.10	0.5 ±0.10	0.5 ±0.10	0.15	0.30	0.40
0603	1.6 ±0.15	0.8 ±0.10	0.8 ±0.10	0.20	0.60	0.40
0805	2.0 ±0.20	1.25 ±0.10	0.85 ±0.10	0.25	0.75	0.55
1206	3.2 ±0.15	1.6 ±0.15		0.25	0.75	1.40

Thickness classification and packing quantities

Type	Thickness classification (mm)	8 mm tape width per reel 180 mm / 7” Paper
0402	0.50 ±0.10	10 000
0603	0.80 ±0.10	4 000
0805	0.85 ±0.10	4 000
1206	0.85 ±0.10	4 000

Specification for 0402

MLV									
General purpose									
0402									
Maximum working voltage	5.5 V	5.5 V	9 V	14 V	14 V	18 V	18 V	18 V	30 V
Varistor voltage tolerance (code 8)	10 ~ 14 V (S)	7.2 ~ 10.8V (M)	10.2~13.8V (L)	18~24 V (S)	16.2~19.8V (K)	24~34 V (S)	50~80 V (S)	21.6~26.4 V (K)	50~80 V (S)
1 pF									
3 pF							0.5 ±0.10		0.5 ±0.10
5 pF									
10 pF						0.5 ±0.10			
15 pF									
22 pF	0.5 ±0.10			0.5 ±0.10					
27 pF									
33 pF									
40 pF									
50 pF			0.5 ±0.10		0.5 ±0.10			0.5 ±0.10	
82 pF									
100 pF		0.5 ±0.10							
120 pF									
160 pF									
200 pF									
250 pF									
300 pF									
360 pF									
470 pF									
480 pF									
650 pF									
900 pF									
Tape width	8 mm								

Note: Values in shaded cells indicate thickness class (unit: mm)

Specification for 0603

MLV								
General purpose								
0603								
Maximum working voltage	5.5 V	5.5 V	9 V	9 V	14 V	14 V	18 V	30 V
Varistor voltage tolerance (code 8)	10 ~ 14 V (S)	7.2 ~ 10.8 V (M)	14~ 18 V (S)	9.6 ~ 14.4 V (M)	18 ~ 24 V (S)	16.2 ~ 19.8 V (K)	24 ~ 32 V (S)	50 ~ 80 V (S)
1 pF								
3 pF								0.80 ±0.10
5 pF								
9 pF								
10 pF							0.80 ±0.10	
15 pF								
22 pF	0.80 ±0.10		0.80 ±0.10		0.80 ±0.10			
33 pF								
50 pF								
82 pF								
100 pF		0.80 ±0.10		0.80 ±0.10		0.80 ±0.10		
120 pF								
160 pF								
180 pF								
200 pF								
250 pF								
300 pF								
350 pF								
360 pF								
470 pF								
650 pF								
680 pF								
800 pF								
900 pF								
Tape width	8 mm							

Note: Values in shaded cells indicate thickness class (unit: mm)

Specification for 0805

MLV								
General purpose								
0805								
Maximum working voltage	5.5 V	9 V	14 V	16 V	18 V	26 V	30 V	38 V
Varistor voltage tolerance (code 8)	7.2 ~ 10.8 V (M)	10.8 ~ 14.6 V (L)	16.3 ~ 20.7 V (K)	20 ~ 27 V (S)	19.27 ~ 28.8 V (M)	29.7 ~ 36.3 V (K)	36.9 ~ 45.1 V (K)	45 ~ 58 V (S)
100 pF	0.85 ±0.10	0.85 ±0.10	0.85 ±0.10	0.85 ±0.10	0.85 ±0.10	0.85 ±0.10	0.85 ±0.10	0.85 ±0.10
160 pF								
250 pF								
400 pF								
500 pF								
600 pF								
900 pF								
1.1 nF								
3.3 nF								
Tape width	8 mm							

Note: Values in shaded cells indicate thickness class (unit: mm)

Specification for 1206

MLV						
General purpose						
1206						
Maximum working voltage	5.5 V	14 V	18 V	26 V	30 V	38 V
working voltage	7.2 ~ 10.8 V (M)	16.3 ~ 20.7 V (K)	19.27 ~ 28.8 V (M)	29.7 ~ 36.3 V (K)	36.9 ~ 45.1 V (K)	45 ~ 58 V (S)
100 pF		0.85 ±0.10	0.85 ±0.10	0.85 ±0.10	0.85 ±0.10	0.85 ±0.10
160 pF						
250 pF						
400 pF						
500 pF	0.85 ±0.10					
600 pF						
800 pF						
900 pF						
1.1 nF						
3.3 nF						
Tape width	8 mm					

Note: Values in shaded cells indicate thickness class (unit: mm)

Ordering information for 0402 to 1206

Global part number

Ordering example: VRS0402KR55R680N

VR S 0402 K R 55R 680 N

Series name (code 1-2)
- VR = Varistor

Chip type (code 3)
- S = Single chip

Size code (code 4-7)
- 0402
- 0603
- 0805
- 1206

Varistor voltage tolerance (code 8)
- K = ±10 %
- L = ±15 %
- M = ±20 %
- S = Special range

Packing style (code 9)
- R = paper tape reel Ø7 inch

Capacitance tolerance (code 16)
- K = ± 10 %
- L = ± 15 %
- M = ± 20 %
- N = ± 30 %

Capacitance value (code 13-15)
- 680 = 68 pF
- (2 significant digits+number of zeros; the 3rd digit signifies the multiplying factor, and letter R is decimal point)
- 0 = x 1
- 1 = x 10^1

Maximum working voltage (code 10-12)
- 33R = 3.3 V
- 55R = 5.5 V
- 090 = 9 V
- 110 = 11 V
- 120 = 12 V
- 140 = 14 V
- 150 = 15 V
- 160 = 16 V
- 180 = 18 V
- 190 = 19 V
- 220 = 22 V
- 260 = 26 V
- 300 = 30 V
- 310 = 31 V
- 380 = 38 V

YAGEO - A GLOBAL COMPANY

ASIA

Dongguan, China
Tel. +86 769 8772 0275
Fax. +86 769 8791 0053

Hong Kong, China
Tel. +852 2342 6833
Fax. +852 2342 6588

Mudu, China
Tel. +86 512 6651 8889
Fax. +86 512 6651 9889

Qingdao, China
Tel. +86 532 8797 0533
Fax. +86 532 8797 0533

Suzhou, China
Tel. +86 512 6825 5568
Fax. +86 512 6825 5386

Tokyo, Japan
Tel. +81 3 6809 3972
Fax. +81 3 6809 3982

Seongnam, Korea
Tel. +82 31 712 4797
Fax. +82 31 712 5866

Kuala Lumpur, Malaysia
Tel. +60 3 8063 8864
Fax. +60 3 8063 7376

Singapore
Tel. +65 6244 7800
Fax. +65 6244 4943

Taipei, Taiwan
Tel. +886 2 6629 9999
Fax. +886 2 6628 8886

EUROPE

Roermond, Benelux
Tel. +31 475 385 555
Fax. +31 475 385 589

Munich, Germany
Tel. +49 8990 7784 380
Fax. +49 8990 7784 379

Szombathely, Hungary
Tel. +36 94 517 702
Fax. +36 94 517 701

Milan, Italy
Tel. +39 02 6129 1017
Fax. +39 02 6601 7490

Moscow, Russian Federation
Tel. +7 965 408 18 11
Fax. +7 498 610 07 07

NORTH AMERICA

San Jose, U.S.A.
Tel. +1 408 240 6200
Fax. +1 408 240 6201

For a complete listing of all Yageo sales offices, distributors, and representatives, please visit "contact us" at

www.yageo.com

© YAGEO Corporation

All rights are reserved. Reproduction in whole or in part is prohibited without the prior written consent of the copyright owner.
The information presented in this document does not form part of any quotation or contract, is believed to be accurate and reliable and may be changed without notice.
No liability will be accepted by the publisher for any consequence of its use. Publication thereof does not convey nor imply any license under patent or other industrial or intellectual property rights.

Printed in Taiwan

Document order number : YL 100 00144

Date of release: January 2014

Innovative Service Around the Globe YAGEO

Looking for pricing, stock, or lifecycle information?

Click below to explore more details on WIN SOURCE:

- View CC0402KRX7R9BB681 on WIN SOURCE
- Yageo Information

Optimize Your Supply Chain with WIN SOURCE Solutions

- Global Sourcing Solution
- Obsolete Management
- Cost Control Management
- Shortage Management
- Alternative Solution
- Excess Inventory Management