THE DATASHEET OF

ISL88001IH46Z-T7A

www.win-source.net 0086-755-83957316

ISL88001, ISL88002, ISL88003

Ultra Low Power 3 Ld Voltage Supervisors in SC-70 and SOT-23 Packages

FN6174
Rev 2.00
May 29, 2012

The ISL88001, ISL88002, ISL88003 supervisors are extremely low power 160nA voltage supervisors that help to monitor the power supply voltages in a wide variety of applications. By providing Power-On Reset and supply voltage supervision in small 3 Ld SC-70 and SOT-23 packages, the ISL88001, ISL88002, ISL88003 devices can help to lower system cost, reduce board space requirements and increase the reliability of systems.

The most popular voltage trip points are available for standard power supplies from 1.8V to 5.0V (see “Ordering Information” on page 3). These reset threshold voltages are accurate to within ±1.2% and the reset signal is valid down to 1V. Active high and active low reset outputs are available in push-pull and open drain configurations (see “Functional Block Diagrams” on page 2).

The ISL88001, ISL88002, ISL88003 devices are specifically designed for low power consumption and high threshold accuracy, making them especially suitable for electronic devices and portable equipment.

Pinouts

ISL88001, ISL88002
(3 LD SC-70, 3 LD SOT-23)
TOP VIEW

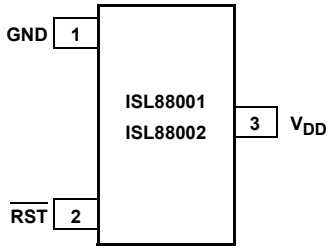

ISL88001 has a push-pull $\overline{RST}$ output
ISL88002 has an open-drain $\overline{RST}$ output

ISL88003
(3 LD SC-70, 3 LD SOT-23)
TOP VIEW

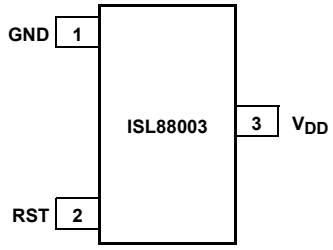

ISL88003 has a push-pull RST output

Features

- Single Voltage Monitoring Supervisors
- Fixed-Voltage Options Allow Precise Monitoring of +1.8V, +2.5V, +3.0V, +3.3V and +5.0V Power Supplies
- Ultra Low 160nA Supply Current
- ±1.2% Voltage Threshold Accuracy
- 190ms Power-On Reset Timeout
- Reset Signal Valid Down to V_{DD} = 1V
- No External Components Necessary
- Immune to Power-Supply Transients
- Available in Small 3 Ld SC-70 and 3 Ld SOT-23 Pb-free Packages
- Pin Compatible with MAX803, MAX809, MAX810
- Pb-Free (RoHS Compliant)

Applications

- Microprocessor/Microcontroller Systems
- Intelligent Instruments
- Controllers
- Computer Systems
- Portable/Battery-Powered Equipment
- PDA and Hand-Held PC Devices

Pin Descriptions

PIN		PIN NAME	PIN FUNCTION
ISL88001 ISL88002	ISL88003		
1	1	GND	Ground IC reference.
2		$\overline{RST}$	The $\overline{RST}$ pin is an active-low reset output that is pulled to GND (LOW) when reset is asserted. The ISL88001 is push-pull while the ISL88002 is open drain.
	2	RST	The RST pin is a push-pull active-high reset output that is pulled to V_{DD} (HIGH) when reset is asserted.
3	3	V_{DD}	Supply Voltage and Monitored Input. The V_{DD} pin is the IC power supply terminal and also the monitored input.

Functional Block Diagrams

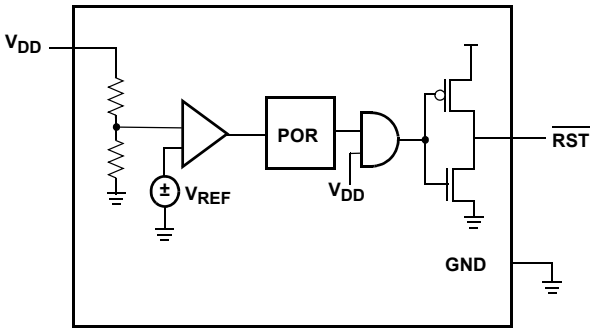

ISL88001

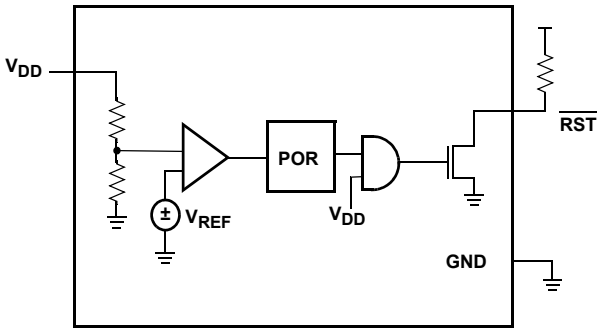

ISL88002

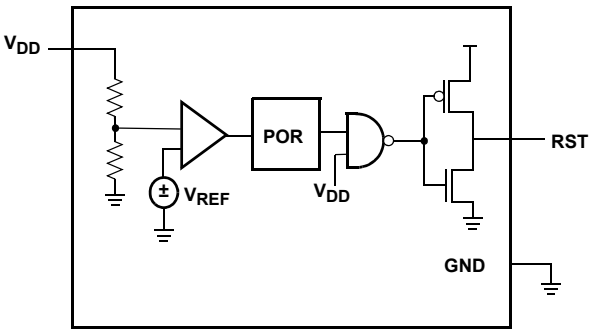

ISL88003

Ordering Information

PART NUMBER (Notes 1, 2, 3, 4)	PART MARKING (Bottom Brand)	RESET	NOMINAL V_{THVDD} (V)	TEMPERATURE RANGE (°C)	PACKAGE Tape and Reel (Pb-free)	PKG. DWG. #
ISL88001IE46Z-T	146	Push-Pull $\overline{RST}$	4.62	-40 to +85	3 Ld SC-70	P3.049
ISL88001IE44Z-T	144	Push-Pull $\overline{RST}$	4.38	-40 to +85	3 Ld SC-70	P3.049
ISL88001IE31Z-T	131	Push-Pull $\overline{RST}$	3.07	-40 to +85	3 Ld SC-70	P3.049
ISL88001IE29Z-T	129	Push-Pull $\overline{RST}$	2.92	-40 to +85	3 Ld SC-70	P3.049
ISL88001IE26Z-T	126	Push-Pull $\overline{RST}$	2.63	-40 to +85	3 Ld SC-70	P3.049
ISL88001IE23Z-T	123	Push-Pull $\overline{RST}$	2.32	-40 to +85	3 Ld SC-70	P3.049
ISL88001IE22Z-T	122	Push-Pull $\overline{RST}$	2.19	-40 to +85	3 Ld SC-70	P3.049
ISL88001IE17Z-T	117	Push-Pull $\overline{RST}$	1.67	-40 to +85	3 Ld SC-70	P3.049
ISL88001IE16Z-T	116	Push-Pull $\overline{RST}$	1.58	-40 to +85	3 Ld SC-70	P3.049
ISL88001IH46Z-T	1H46	Push-Pull $\overline{RST}$	4.62	-40 to +85	3 Ld SOT-23	P3.064
ISL88001IH44Z-T	1H44	Push-Pull $\overline{RST}$	4.38	-40 to +85	3 Ld SOT-23	P3.064
ISL88001IH31Z-T	1H31	Push-Pull $\overline{RST}$	3.07	-40 to +85	3 Ld SOT-23	P3.064
ISL88001IH29Z-T	1H29	Push-Pull $\overline{RST}$	2.92	-40 to +85	3 Ld SOT-23	P3.064
ISL88001IH26Z-T	1H26	Push-Pull $\overline{RST}$	2.63	-40 to +85	3 Ld SOT-23	P3.064
ISL88001IH23Z-T	1H23	Push-Pull $\overline{RST}$	2.32	-40 to +85	3 Ld SOT-23	P3.064
ISL88001IH22Z-T	1H22	Push-Pull $\overline{RST}$	2.19	-40 to +85	3 Ld SOT-23	P3.064
ISL88001IH17Z-T	1H17	Push-Pull $\overline{RST}$	1.67	-40 to +85	3 Ld SOT-23	P3.064
ISL88001IH16Z-T	1H16	Push-Pull $\overline{RST}$	1.58	-40 to +85	3 Ld SOT-23	P3.064
ISL88002IE46Z-T	246	Open Drain $\overline{RST}$	4.62	-40 to +85	3 Ld SC-70	P3.049
ISL88002IE44Z-T	244	Open Drain $\overline{RST}$	4.38	-40 to +85	3 Ld SC-70	P3.049
ISL88002IE31Z-T	231	Open Drain $\overline{RST}$	3.07	-40 to +85	3 Ld SC-70	P3.049
ISL88002IE29Z-T	229	Open Drain $\overline{RST}$	2.92	-40 to +85	3 Ld SC-70	P3.049
ISL88002IE26Z-T	226	Open Drain $\overline{RST}$	2.63	-40 to +85	3 Ld SC-70	P3.049
ISL88002IE23Z-T	223	Open Drain $\overline{RST}$	2.32	-40 to +85	3 Ld SC-70	P3.049
ISL88002IE22Z-T	222	Open Drain $\overline{RST}$	2.19	-40 to +85	3 Ld SC-70	P3.049
ISL88002IE17Z-T	217	Open Drain $\overline{RST}$	1.67	-40 to +85	3 Ld SC-70	P3.049
ISL88002IE16Z-T	216	Open Drain $\overline{RST}$	1.58	-40 to +85	3 Ld SC-70	P3.049
ISL88002IH46Z-T	2H46	Open Drain $\overline{RST}$	4.62	-40 to +85	3 Ld SOT-23	P3.064
ISL88002IH44Z-T	2H44	Open Drain $\overline{RST}$	4.38	-40 to +85	3 Ld SOT-23	P3.064
ISL88002IH31Z-T	2H31	Open Drain $\overline{RST}$	3.07	-40 to +85	3 Ld SOT-23	P3.064
ISL88002IH29Z-T	2H29	Open Drain $\overline{RST}$	2.92	-40 to +85	3 Ld SOT-23	P3.064
ISL88002IH26Z-T	2H26	Open Drain $\overline{RST}$	2.63	-40 to +85	3 Ld SOT-23	P3.064
ISL88002IH23Z-T	2H23	Open Drain $\overline{RST}$	2.32	-40 to +85	3 Ld SOT-23	P3.064
ISL88002IH22Z-T	2H22	Open Drain $\overline{RST}$	2.19	-40 to +85	3 Ld SOT-23	P3.064
ISL88002IH17Z-T	2H17	Open Drain $\overline{RST}$	1.67	-40 to +85	3 Ld SOT-23	P3.064
ISL88002IH16Z-T	2H16	Open Drain $\overline{RST}$	1.58	-40 to +85	3 Ld SOT-23	P3.064
ISL88003IE46Z-T	346	Push-Pull RST	4.62	-40 to +85	3 Ld SC-70	P3.049
ISL88003IE44Z-T	344	Push-Pull RST	4.38	-40 to +85	3 Ld SC-70	P3.049

Ordering Information (Continued)

PART NUMBER (Notes 1, 2, 3, 4)	PART MARKING (Bottom Brand)	RESET	NOMINAL V_{THVDD} (V)	TEMPERATURE RANGE (°C)	PACKAGE Tape and Reel (Pb-free)	PKG. DWG. #
ISL88003IE31Z-T	331	Push-Pull RST	3.07	-40 to +85	3 Ld SC-70	P3.049
ISL88003IE29Z-T	329	Push-Pull RST	2.92	-40 to +85	3 Ld SC-70	P3.049
ISL88003IE26Z-T	326	Push-Pull RST	2.63	-40 to +85	3 Ld SC-70	P3.049
ISL88003IE23Z-T	323	Push-Pull RST	2.32	-40 to +85	3 Ld SC-70	P3.049
ISL88003IE22Z-T	322	Push-Pull RST	2.19	-40 to +85	3 Ld SC-70	P3.049
ISL88003IE17Z-T	317	Push-Pull RST	1.67	-40 to +85	3 Ld SC-70	P3.049
ISL88003IE16Z-T	316	Push-Pull RST	1.58	-40 to +85	3 Ld SC-70	P3.049
ISL88003IH46Z-T	3H46	Push-Pull RST	4.62	-40 to +85	3 Ld SOT-23	P3.064
ISL88003IH44Z-T	3H44	Push-Pull RST	4.38	-40 to +85	3 Ld SOT-23	P3.064
ISL88003IH31Z-T	3H31	Push-Pull RST	3.07	-40 to +85	3 Ld SOT-23	P3.064
ISL88003IH29Z-T	3H29	Push-Pull RST	2.92	-40 to +85	3 Ld SOT-23	P3.064
ISL88003IH26Z-T	3H26	Push-Pull RST	2.63	-40 to +85	3 Ld SOT-23	P3.064
ISL88003IH23Z-T	3H23	Push-Pull RST	2.32	-40 to +85	3 Ld SOT-23	P3.064
ISL88003IH22Z-T	3H22	Push-Pull RST	2.19	-40 to +85	3 Ld SOT-23	P3.064
ISL88003IH17Z-T	3H17	Push-Pull RST	1.67	-40 to +85	3 Ld SOT-23	P3.064
ISL88003IH16Z-T	3H16	Push-Pull RST	1.58	-40 to +85	3 Ld SOT-23	P3.064
ISL88001/2/3EVAL1Z	Evaluation Platform for ISL88001, ISL88002 and ISL88003					

NOTES:

1. For non-standard voltage trip point versions between 1.5V and 5V in 100mV increments, please contact factory for availability.
2. Add “-TK” suffix for 1000 piece Tape and Reel. Please refer to TB347 for details on reel specifications.
3. These Intersil Pb-free plastic packaged products employ special Pb-free material sets, molding compounds/die attach materials, and 100% matte tin plate plus anneal (e3 termination finish, which is RoHS compliant and compatible with both SnPb and Pb-free soldering operations). Intersil Pb-free products are MSL classified at Pb-free peak reflow temperatures that meet or exceed the Pb-free requirements of IPC/JEDEC J STD-020.
4. For Moisture Sensitivity Level (MSL), please see device information page for ISL88001, ISL88002, ISL88003. For more information on MSL please see techbrief TB363.

Absolute Maximum Ratings

Voltage on Any Pin with respect to GND . . . . . -0.3V to +6.5V
DC Output Current 10mA

Recommended Operating Conditions

Temperature Range (Industrial) . . . . . -40°C to +85°C

Thermal Information

Thermal Resistance (Typical, Note 5) θ_{JA} (°C/W)
3 Lead SC-70 640
3 Lead SOT-23 590
Temperature Under Bias . . . . . -40°C to +125°C
Storage Temperature . . . . . -65°C to +150°C
Pb-Free Reflow Profile. . . . . see link below
http://www.intersil.com/pbfree/Pb-FreeReflow.asp

CAUTION: Do not operate at or near the maximum ratings listed for extended periods of time. Exposure to such conditions may adversely impact product reliability and result in failures not covered by warranty.

NOTE:

5. θ_{JA} is measured with the component mounted on a high effective thermal conductivity test board in free air. See Tech Brief TB379 for details.

Electrical Specifications

Over the recommended operating conditions unless otherwise specified. **Boldface limits apply over the operating temperature range, -40°C to +85°C.**

SYMBOL	PARAMETER	TEST CONDITIONS	MIN (Note 6)	TYP	MAX (Note 6)	UNITS
BIAS						
V_{DD}	Supply Voltage Range	V_{THVDD} = 4.64V, 4.38V, 3.09V, 2.92V, 2.63V	**1.8**		**5.5**	V
		V_{THVDD} = 2.32V, 2.19V, 1.67V, 1.58V	**1.8**		**2.75**	V
I_{DD}	Supply Current (RESET, $\overline{RESET}$ open)	V_{DD} = 5.0V, V_{THVDD} = 4.64V, 4.38V		215	**400**	nA
		V_{DD} = 3.3V, V_{THVDD} = 3.09V, 2.92V, 2.63V		200	**350**	nA
		V_{DD} = 2.5V, V_{THVDD} = 2.32V, 2.19V		175	**325**	nA
		V_{DD} = 1.8V, V_{THVDD} = 1.67V, 1.58V		160	**300**	nA
VOLTAGE THRESHOLD						
V_{THVDD}	Falling Fixed V_{DD} Voltage Trip Point	ISL88001, 88002, 88003Ix**46,** T_A = +25°C	4.570	4.625	4.681	V
		ISL88001, 88002, 88003Ix**46**	**4.500**		**4.750**	V
		ISL88001, 88002, 88003Ix**44,** T_A = +25°C	4.327	4.380	4.433	V
		ISL88001, 88002, 88003Ix**44**	**4.262**		**4.498**	V
		ISL88001, 88002, 88003Ix**31,** T_A = +25°C	3.038	3.075	3.112	V
		ISL88001, 88002, 88003Ix**31**	**3.000**		**3.150**	V
		ISL88001, 88002, 88003Ix**29,** T_A = +25°C	2.890	2.925	2.960	V
		ISL88001, 88002, 88003Ix**29**	**2.850**		**3.000**	V
		ISL88001, 88002, 88003Ix**26,** T_A = +25°C	2.598	2.630	2.662	V
		ISL88001, 88002, 88003Ix**26**	**2.559**		**2.701**	V
		ISL88001, 88002, 88003Ix**23,** T_A = +25°C	2.292	2.320	2.348	V
		ISL88001, 88002, 88003Ix**23**	**2.257**		**2.383**	V
		ISL88001, 88002, 88003Ix**22,** T_A = +25°C	2.164	2.190	2.216	V
		ISL88001, 88002, 88003Ix**22**	**2.131**		**2.249**	V
		ISL88001, 88002, 88003Ix**17,** T_A = +25°C	1.650	1.670	1.690	V
		ISL88001, 88002, 88003Ix**17**	**1.625**		**1.715**	V
		ISL88001, 88002, 88003Ix**16,** T_A = +25°C	1.561	1.580	1.599	V
		ISL88001, 88002, 88003Ix**16**	**1.537**		**1.623**	V
$V_{THVDDHYST}$	Hysteresis at V_{DD} Input			1		%
T_{VTHVDD}	V_{THVDD} Temperature Coefficient			0.48		mV/°C

Electrical Specifications Over the recommended operating conditions unless otherwise specified. **(Continued)Boldface limits apply over the operating temperature range, -40°C to +85°C.**

SYMBOL	PARAMETER	TEST CONDITIONS	MIN (Note 6)	TYP	MAX (Note 6)	UNITS
RESET / $\overline{\text{RESET}}$						
V_{OL}	Reset Output Voltage Low	$V_{DD} < V_{THVDD}$, for ISL88001		0.2	**0.40**	V
		$V_{DD} < V_{THVDD}$, Sinking 0.5mA for ISL88002		0.2	**0.40**	V
		$V_{DD} > V_{THVDD}$, for ISL88003		0.2	**0.40**	V
V_{OH}	Reset Output Voltage High	$V_{DD} > V_{THVDD}$, for ISL88001	**V_{DD} - 0.4**	V_{DD} - 0.2		V
		$V_{DD} > V_{THVDD}$, Sourcing 0.5mA, ISL88002		V_{DD} - 0.2		V
		$V_{DD} < V_{THVDD}$, for ISL88003	**V_{DD} - 0.4**	V_{DD} - 0.2		V
t_{RPD}	V_{TH} to Reset Asserted Delay			15		µs
t_{POR}	POR Timeout Delay		**140**	200	**260**	ms
C_{LOAD}	Load Capacitance on Reset Pin			5		pF

NOTE:

6. Parameters with MIN and/or MAX limits are 100% tested at +25°C, unless otherwise specified. Temperature limits established by characterization and are not production tested.

Pin Descriptions

RST

The ISL88003 push-pull RST output is set to VDD (HIGH) whenever the device is first powered up or VDD falls below its respective minimum voltage sense level.

$\overline{\text{RST}}$

The $\overline{\text{RST}}$ output functions identically to the complementary $\overline{\text{RST}}$ output. On the ISL88001, this is a push-pull output. On the ISL88002, it is an open drain output that is pulled to GND (LOW) when reset is asserted. Suggested pull-up $\overline{\text{RST}}$ resistor values are in the range of 5kΩ to 100kΩ.

VDD

The V_{DD} pin is the power supply terminal. The voltage at this pin is compared against an internal factory-programmed voltage trip point, V_{THVDD}. A reset is first asserted when the device is initially powered up to ensure that the power supply has stabilized. Thereafter, reset is again asserted whenever V_{DD} falls below V_{THVDD}. The device is designed with hysteresis to help prevent chattering due to noise.

Principles of Operation

The ISL88001, ISL88002, ISL88003 devices provide a low power, high accuracy solution for those voltage monitoring applications needing supply voltage supervision with power reset control. By integrating these features into small 3 Ld SC-70 and 3 Ld SOT-23 packages and consuming as little as 160nA of supply current, these devices can lower system cost and reduce board space requirements.

Low Voltage Monitoring

During normal operation, the ISL88001, ISL88002, ISL88003 devices monitor the voltage level of V_{DD}. The device asserts a reset signal ($\overline{\text{RST}}$ = LOW or RST = HIGH) to a µP/µC if this voltage is less than the preset voltage trip point. The reset signal prevents system operation during a power failure or brownout condition. This reset signal remains asserted until V_{DD} exceeds the voltage threshold setting for the reset time delay period t_{POR}. See Figure 2.

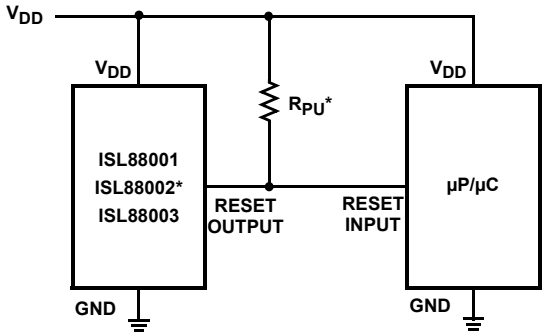

*Necessary for ISL88002

FIGURE 1. TYPICAL APPLICATION DIAGRAM

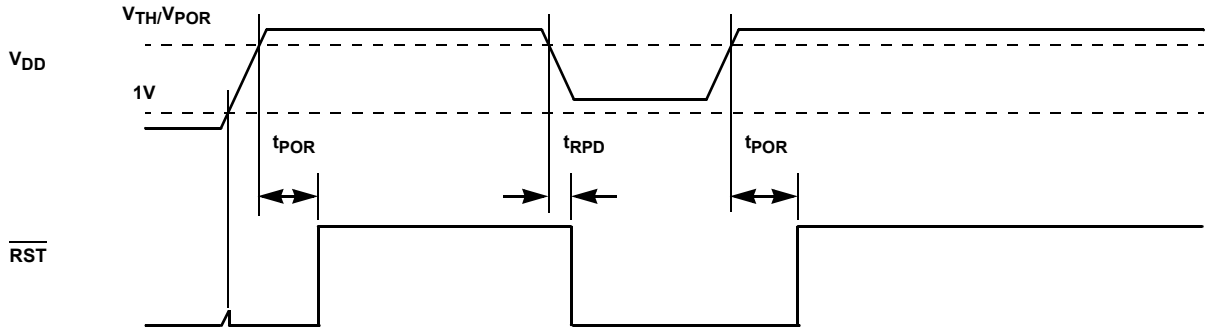

FIGURE 2. VOLTAGE MONITORING TIMING DIAGRAM

Power-On Reset (POR)

Applying power to the ISL88001, ISL88002, ISL88003 activates a POR circuit, which asserts reset once V_{DD} = 1 V. (i.e. $\overline{RST}$ goes LOW). This provides several benefits:

- It prevents the system microprocessor from starting to operate with insufficient voltage.
- It prevents the processor from operating prior to stabilization of the oscillator.
- It ensures that the monitored device is held out of operation until internal registers are properly loaded.
- It allows time for an FPGA to download its configuration prior to initialization of the circuit.

The reset signal remains asserted until V_{DD} rises above the minimum voltage sense level for time period t_{POR}. This ensures that the V_{DD} voltage has stabilized.

Optional V_{DD} de-coupling capacitance can be added to filter transients if needed.

See Figures 13 and 14 illustrating the available evaluation platform, ISL88001/2/3EVAL1Z. This evaluation board is shipped with the many released variants loosely packed and the 4.6V threshold variants mounted for immediate evaluation.

Parametric Performance

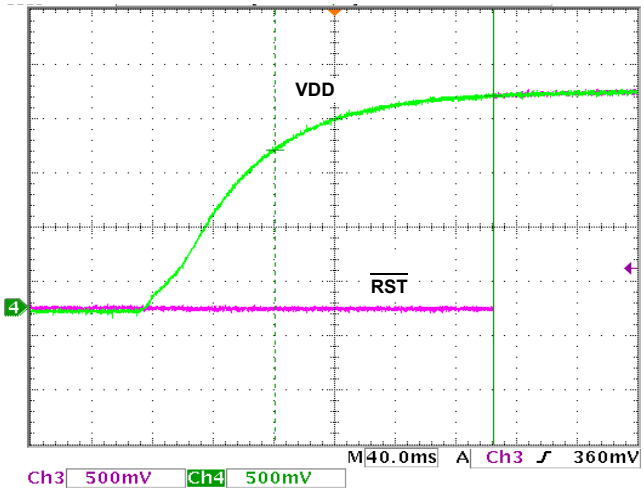

FIGURE 3. ISL88001 $\overline{RST}$ t_{POR} ~144ms

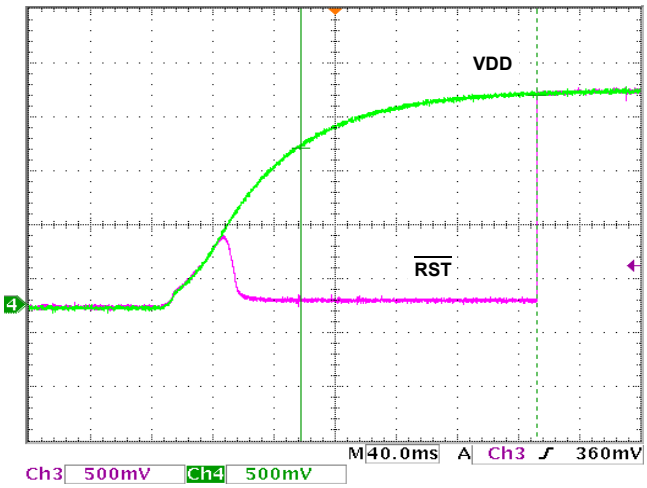

FIGURE 4. ISL88002 $\overline{RST}$ t_{POR} ~155ms, R_{PU} = 5kΩ

Parametric Performance (Continued)

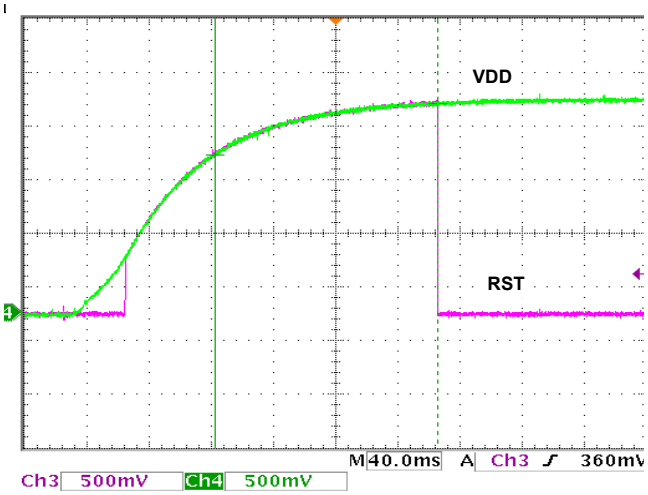

FIGURE 5. ISL88003 RST t_{POR} ~145ms

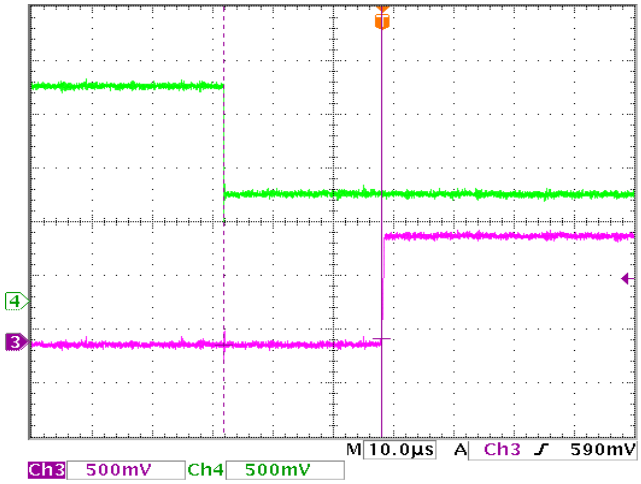

FIGURE 6. ISL88003 t_{PRD} ~26µs

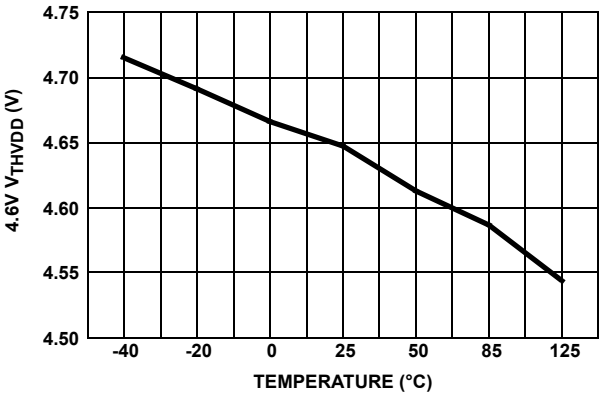

FIGURE 7. ISL8800x 4.6V V_{THVDD} vs TEMPERATURE

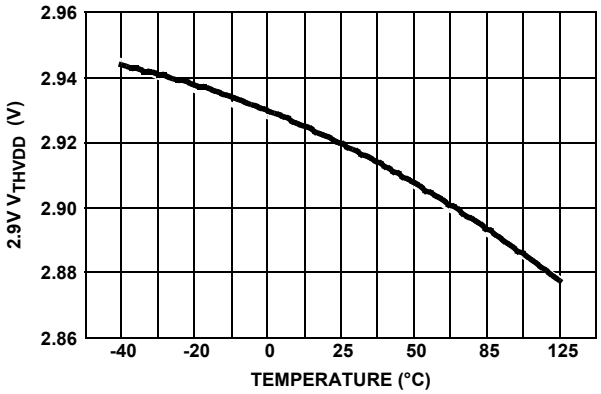

FIGURE 8. ISL8800x 2.9V V_{THVDD} vs TEMPERATURE

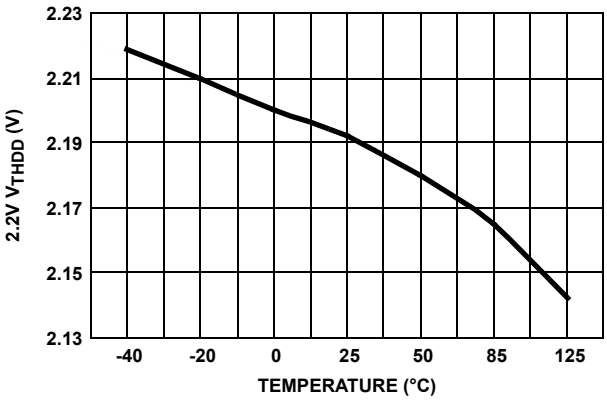

FIGURE 9. ISL8800x 2.2V V_{THVDD} vs TEMPERATURE

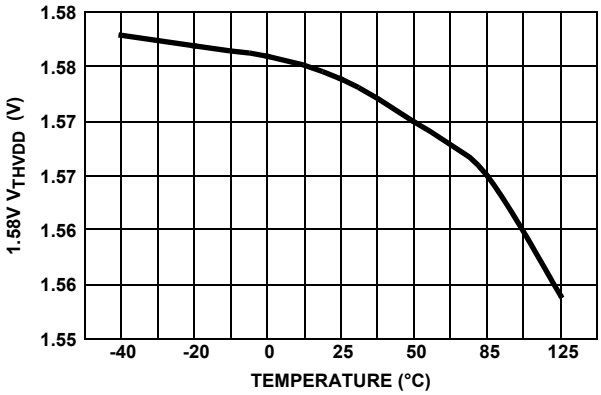

FIGURE 10. ISL8800x 1.58V V_{THVDD} vs TEMPERATURE

Parametric Performance (Continued)

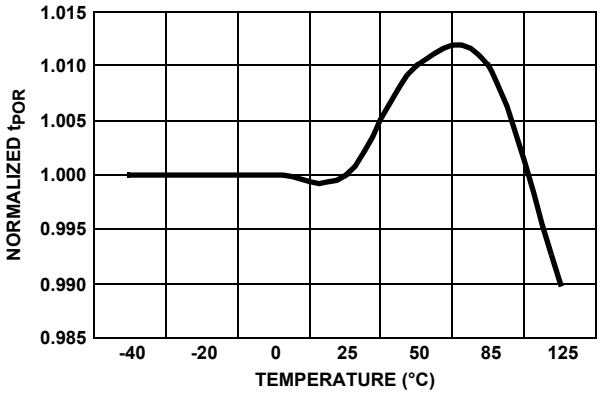

FIGURE 11. ISL8800x NORMALIZED +25°C t_{POR} vs TEMPERATURE

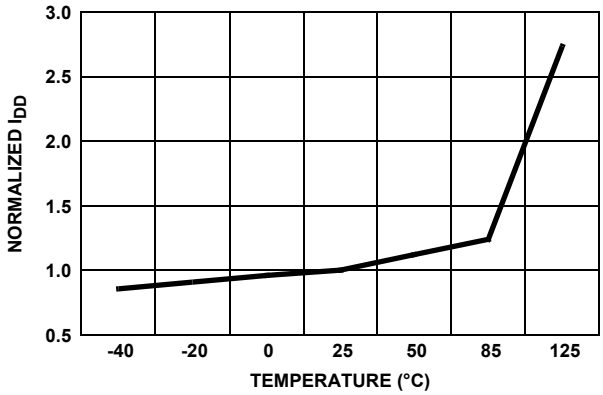

FIGURE 12. ISL8800x NORMALIZED +25°C I_{DD} vs TEMPERATURE

ISL88001/2/3EVAL1Z Evaluation Platform

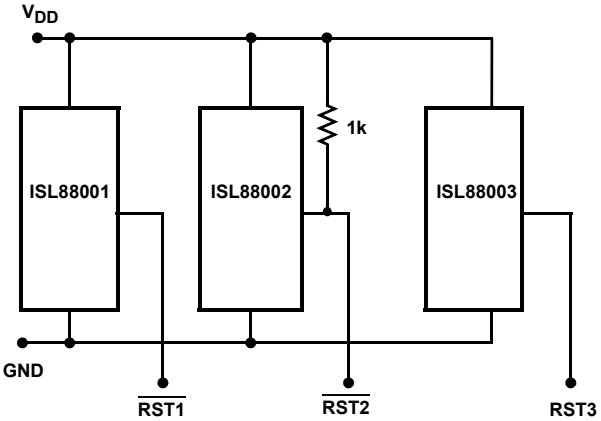

FIGURE 13. ISL88001/2/3EVAL1Z SCHEMATIC

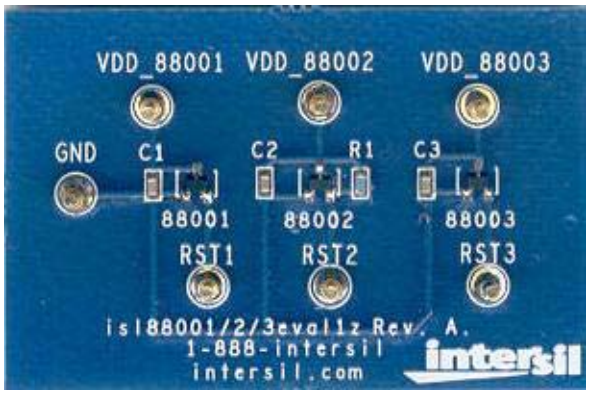

FIGURE 14. ISL88001/2/3EVAL1Z PHOTOGRAPH

Small Outline Transistor Plastic Packages (SC70-3)

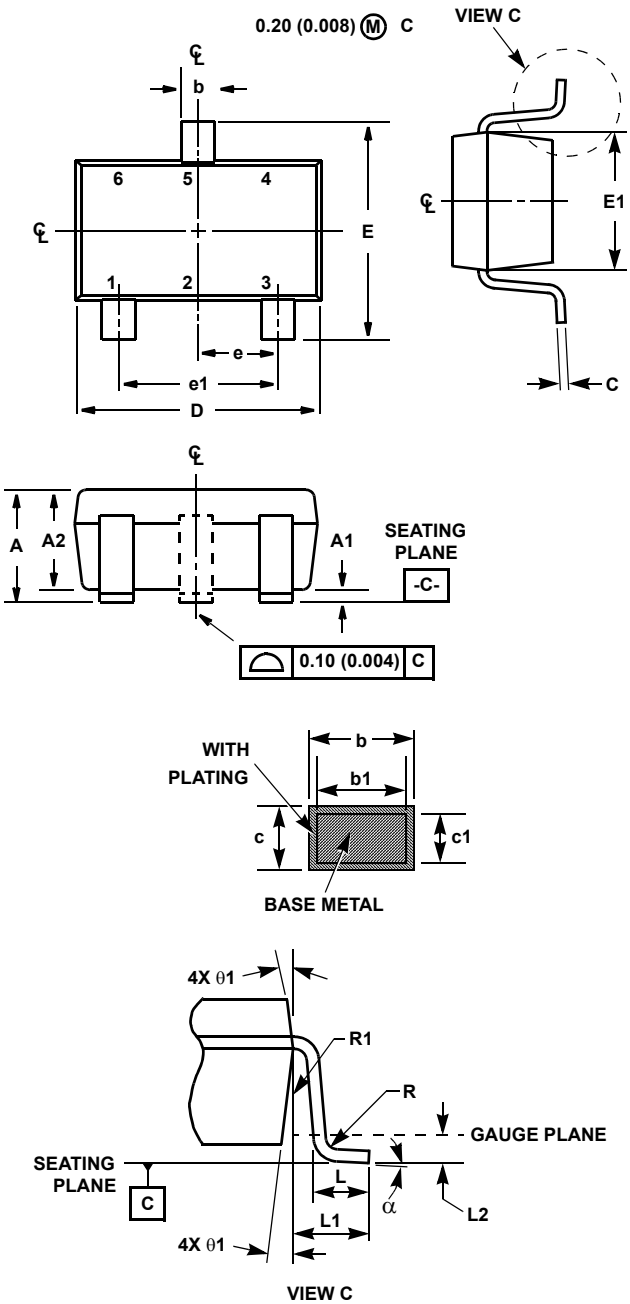

P3.049

3 LEAD SMALL OUTLINE TRANSISTOR PLASTIC PACKAGE

SYMBOL	INCHES		MILLIMETERS		NOTES
	MIN	MAX	MIN	MAX	
A	0.031	0.043	0.80	1.10	-
A1	0.000	0.004	0.00	0.10	-
A2	0.031	0.039	0.80	1.00	-
b	0.009	0.016	0.25	0.40	-
b1	0.009	0.014	0.25	0.35	
c	0.004	0.007	0.10	0.18	6
c1	0.004	0.007	0.10	0.16	6
D	0.071	0.087	1.80	2.20	3
E	0.071	0.094	1.80	2.40	-
E1	0.045	0.053	1.15	1.35	3
e	0.0256 Ref		0.65 Ref		-
e1	0.0512 Ref		1.30 Ref		-
L	0.010	0.018	0.26	0.46	4
L1	0.017 Ref.		0.420 Ref.		-
L2	0.006 BSC		0.15 BSC		
α	0°	8°	0°	8°	-
N	3		3		5
R	0.004	-	0.10	-	
R1	0.004	0.010	0.15	0.25	

Rev. 0 11/06

NOTES:

1. Dimensioning and tolerances per ASME Y14.5M-1994.
2. Package conforms to EIAJ SC70 and JEDEC MO-203AA.
3. Dimensions D and E1 are exclusive of mold flash, protrusions, or gate burrs.
4. Footlength L measured at reference to gauge plane.
5. “N” is the number of terminal positions.
6. These Dimensions apply to the flat section of the lead between 0.08mm and 0.15mm from the lead tip.
7. Controlling dimension: MILLIMETER. Converted inch dimensions are for reference only.

© Copyright Intersil Americas LLC 2008-2012. All Rights Reserved.
All trademarks and registered trademarks are the property of their respective owners.

For additional products, see www.intersil.com/en/products.html

Intersil products are manufactured, assembled and tested utilizing ISO9001 quality systems as noted in the quality certifications found at www.intersil.com/en/support/qualandreliability.html

Intersil products are sold by description only. Intersil may modify the circuit design and/or specifications of products at any time without notice, provided that such modification does not, in Intersil's sole judgment, affect the form, fit or function of the product. Accordingly, the reader is cautioned to verify that datasheets are current before placing orders. Information furnished by Intersil is believed to be accurate and reliable. However, no responsibility is assumed by Intersil or its subsidiaries for its use; nor for any infringements of patents or other rights of third parties which may result from its use. No license is granted by implication or otherwise under any patent or patent rights of Intersil or its subsidiaries.

For information regarding Intersil Corporation and its products, see www.intersil.com

Package Outline Drawing

P3.064

3 LEAD SMALL OUTLINE TRANSISTOR PLASTIC PACKAGE (SOT23-3)

Rev 3, 3/12

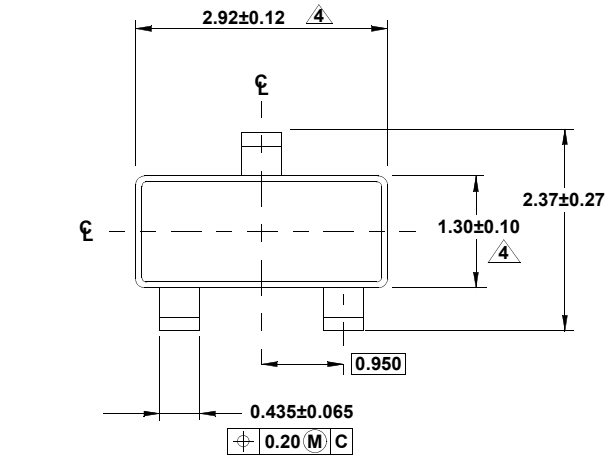

TOP VIEW

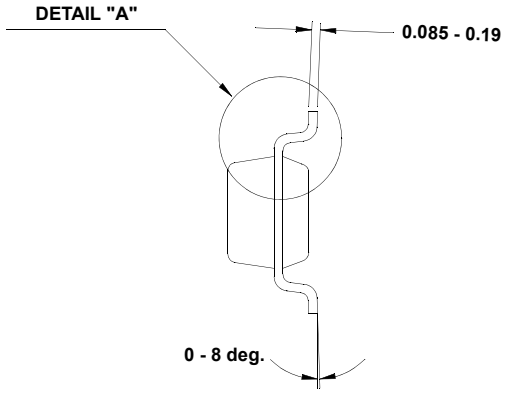

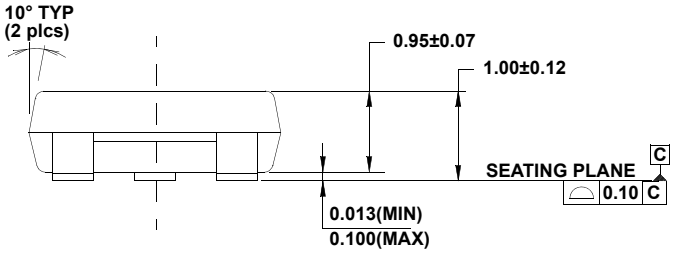

SIDE VIEW

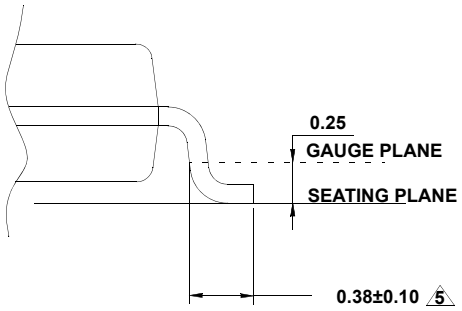

DETAIL "A"

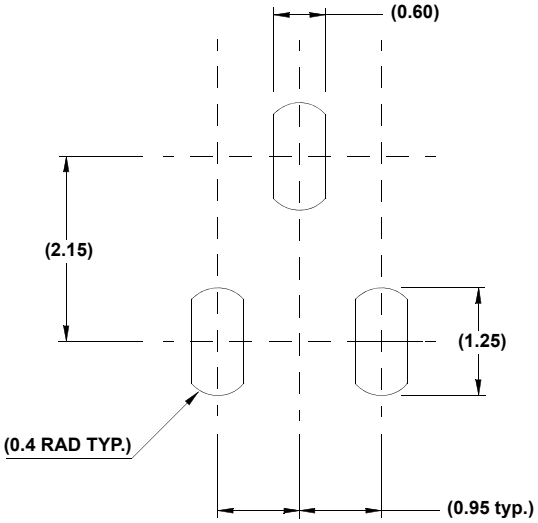

TYPICAL RECOMMENDED LAND PATTERN

NOTES:

1. Dimensions are in millimeters.
   Dimensions in ( ) for Reference Only.
2. Dimensioning and tolerancing conform to AMSEY14.5m-1994.
3. Reference JEDEC TO-236.
4. Dimension does not include interlead flash or protrusions.
   Interlead flash or protrusions shall not exceed 0.25mm per side.
5. Footlength is measured at reference to gauge plane.

Looking for pricing, stock, or lifecycle information?

Click below to explore more details on WIN SOURCE:

- View ISL88001IH46Z-T7A on WIN SOURCE
- Intersil Information

Optimize Your Supply Chain with WIN SOURCE Solutions

- Global Sourcing Solution
- Obsolete Management
- Cost Control Management
- Shortage Management
- Alternative Solution
- Excess Inventory Management