THE DATASHEET OF

TMP303ADRLR

www.win-source.net 0086-755-83957316

TMP303 Easy-to-Use, Low-Power, 1°C, Low-Supply Temperature Range Monitor In Micropackage

1 Features

- Low Power: 5 µA (Maximum)
- SOT-563 Package: 1.60 × 1.60 × 0.6 mm
- Trip Point Accuracy:
  - ±0.2°C (Typical) from –40°C to 125°C
- Push-Pull Output
- Selectable Hysteresis: 1/2/5/10°C
- Supply Voltage Range: 1.4 V to 3.6 V

2 Applications

- Battery Charging
- Battery Thermal Protection
- Consumer Electronics
- Enterprise
- Telecom

3 Description

The TMP303 devices are temperature range monitors that offer design flexibility through an extra small footprint (SOT-563), low power (5 µA maximum) and low supply voltage capability (as low as 1.4 V).

These devices require no additional components for operation; each can function independent of microprocessors or microcontrollers.

There are seven trip points available see *Device Options*. Trip points can be programmed at the factory to any desired temperature. For applications that require different values, contact your local TI representative.

The OUT pin is a push-pull, active-high output. When the measured temperature is beyond the trip point range, and the Set Output High (SOH) pin is low, the OUT pin is high. The SOH pin is an input pin with an internal pulldown resistor. When the SOH pin is forced high, the OUT pin goes high regardless of the measured temperature.

Device Information(1)

PART NUMBER	PACKAGE	BODY SIZE (NOM)
TMP303	SOT-563 (6)	1.60 mm × 1.20 mm

(1) For all available packages, see the orderable addendum at the end of the data sheet.

TMP303 Functional Block Diagram

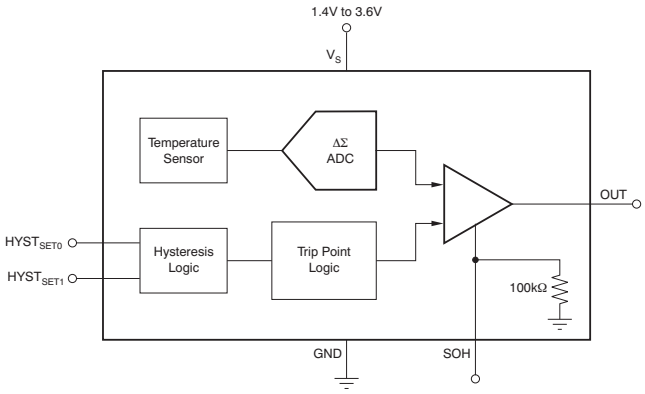

Typical Trip Threshold Accuracy at -20°C to 125°C

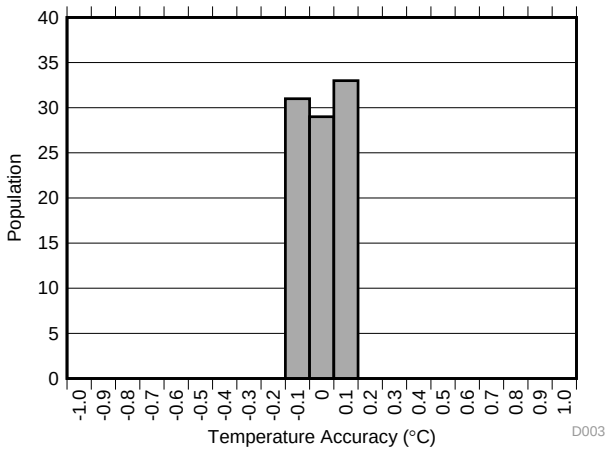

An IMPORTANT NOTICE at the end of this data sheet addresses availability, warranty, changes, use in safety-critical applications, intellectual property matters and other important disclaimers. PRODUCTION DATA.

Table of Contents

1 **Features** ... 1
2 **Applications** ... 1
3 **Description** ... 1
4 **Revision History** ... 2
5 **Device Options** ... 3
6 **Pin Configuration and Functions** ... 3
7 **Specifications** ... 4
7.1 Absolute Maximum Ratings ... 4
7.2 ESD Ratings ... 4
7.3 Recommended Operating Conditions ... 4
7.4 Thermal Information ... 4
7.5 Electrical Characteristics ... 5
7.6 Typical Characteristics ... 6
8 **Detailed Description** ... 8
8.1 Overview ... 8
8.2 Functional Block Diagram ... 8
8.3 Feature Description ... 9
8.4 Device Functional Modes ... 11
9 **Application and Implementation** ... 12
9.1 Application Information ... 12
9.2 Typical Applications ... 12
10 **Power Supply Recommendations** ... 16
11 **Layout** ... 16
11.1 Layout Guidelines ... 16
11.2 Layout Example ... 16
12 **Device and Documentation Support** ... 17
12.1 Receiving Notification of Documentation Updates 17
12.2 Community Resources ... 17
12.3 Trademarks ... 17
12.4 Electrostatic Discharge Caution ... 17
12.5 Glossary ... 17
13 **Mechanical, Packaging, and Orderable Information** ... 17

4 Revision History

NOTE: Page numbers for previous revisions may differ from page numbers in the current version.

Changes from Revision H (October 2018) to Revision I	Page
• Changed input pin voltage maximum value in the *Absolute Maximum Ratings* table from: ((V+) + 0.5) and ≤ 4 to: ((V_S) + 0.3) and ≤ 4	4
• Changed output pin voltage maximum value n the *Absolute Maximum Ratings* table from: ((V+) + 0.5) and ≤ 4 to: ((V_S) + 0.3) and ≤ 4	4

Changes from Revision F (February 2016) to Revision G	Page
• Added TMP303E, TMP303F, TMP303G devices to data sheet	1
• Changed number of Device Options from 4 to 7	1
• Changed Trip Point Accuracy in *Electrical Characteristics* from T_A = -20 to 125°C to T_A = 60 to 125°C	5

Changes from Revision E (October 2015) to Revision F	Page
• Added cross reference to Device Option Table.	1
• Added new image for Trip Threshold Accuracy	1
• Added Trip Points covering range -20 to 125°C	5
• Added Trip Accuracy Error vs Temperature graph.	6

Changes from Revision D (September 2015) to Revision E	Page
• Changed I/O value of $HYST_{SET1}$ row in *Pin Functions* table	3

Changes from Revision C (September 2015) to Revision D	Page
• Consolidated part number to a generic TMP303	1

Copyright © 2009–2018, Texas Instruments Incorporated

Changes from Revision B (January 2011) to Revision C **Page**

- Added *ESD Ratings* table, *Feature Description* section, *Device Functional Modes* section, *Application and Implementation* section, *Power Supply Recommendations* section, *Layout* section, *Device and Documentation Support* section, and *Mechanical, Packaging, and Orderable Information* section 1

Changes from Revision A (September 2009) to Revision B **Page**

- Added TMP303B device to data sheet..... 1

5 Device Options

DEVICE	TRIP POINTS (°C)
TMP303A	T_L = 0, T_H = 60 (1)
TMP303B	T_L = 0, T_H = 55 (1)
TMP303C	T_L = -20, T_H = 60 (1)
TMP303D	T_L = -15, T_H = 125 (1)
TMP303E	T_L = 0, T_H = 70 (1)
TMP303F	T_L = 0, T_H = 80 (1)
TMP303G	T_L = 0, T_H = 90 (1)

(1) Contact a TI representative for other trip points.

6 Pin Configuration and Functions

DRL Package
6-Pin SOT-563
Top View

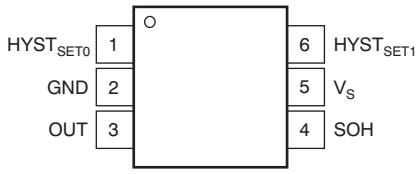

Pin Functions

PIN		I/O	DESCRIPTION
NAME	NO.		
HYST$_{SET0}$	1	Digital Input	This pin is used to set the amount of thermal hysteresis.
GND	2	Ground	Ground
OUT	3	Digital Output	Active high, push-pull output pin. Does not require a pullup resistor to V_S.
SOH	4	Digital Input	Set output high (SOH) pin. If the SOH pin is pulled high, the TMP303 forces the output high. If the SOH pin is grounded or left floating, this pin has no effect on the behavior of the TMP303.
V_S	5	Power Supply	Power supply
HYST$_{SET1}$	6	Digital Input	This pin is used to set the amount of thermal hysteresis.

Copyright © 2009–2018, Texas Instruments Incorporated

7 Specifications

7.1 Absolute Maximum Ratings

over operating free-air temperature range (unless otherwise noted)[1]

		MIN	MAX	UNIT
Supply Voltage, V_S – GND			4	V
Input Pins, Voltage	SOH, $HYST_{SET1}$, $HYST_{SET0}$	–0.5	$((V_S) + 0.3)$ and ≤ 4	V
Output Pin, Voltage	OUT	–0.5	$((V_S) + 0.3)$ and ≤ 4	V
Output Pin, Current	OUT	–55	8	mA
Operating Temperature			130	°C
Junction Temperature, T_J max			150	°C
Storage Temperature, T_{stg}		–60	150	°C

(1) Stresses beyond those listed under *Absolute Maximum Ratings* may cause permanent damage to the device. These are stress ratings only, which do not imply functional operation of the device at these or any other conditions beyond those indicated under *Recommended Operating Conditions*. Exposure to absolute-maximum-rated conditions for extended periods may affect device reliability.

7.2 ESD Ratings

			VALUE	UNIT
$V_{(ESD)}$	Electrostatic discharge	Human-body model (HBM), per ANSI/ESDA/JEDEC JS-001[1]	±2000	V
		Charged-device model (CDM), per JEDEC specification JESD22-C101[2]	±1000	
		Machine model (MM)	±200	

(1) JEDEC document JEP155 states that 500-V HBM allows safe manufacturing with a standard ESD control process.
(2) JEDEC document JEP157 states that 250-V CDM allows safe manufacturing with a standard ESD control process.

7.3 Recommended Operating Conditions

over operating free-air temperature range (unless otherwise noted)

		MIN	NOM	MAX	UNIT
V_S	Power Supply Voltage	1.4		3.6	V
T_A	Specified Temperature Range	–40		125	°C

7.4 Thermal Information

THERMAL METRIC[1]		TMP303 DRL (SOT-563) 6 PINS	UNIT
$R_{\theta JA}$	Junction-to-ambient thermal resistance	210.3	°C/W
$R_{\theta JC(top)}$	Junction-to-case (top) thermal resistance	105.0	°C/W
$R_{\theta JB}$	Junction-to-board thermal resistance	87.5	°C/W
ψ_{JT}	Junction-to-top characterization parameter	6.1	°C/W
ψ_{JB}	Junction-to-board characterization parameter	87.0	°C/W
$R_{\theta JC(bot)}$	Junction-to-case (bottom) thermal resistance	N/A	°C/W

(1) For more information about traditional and new thermal metrics, see the *Semiconductor and IC Package Thermal Metrics* application report, SPRA953.

Copyright © 2009–2018, Texas Instruments Incorporated

7.5 Electrical Characteristics

At T_A = –40°C to 125°C and V_S = 1.4 V to 3.6 V, unless otherwise noted.(1)

PARAMETER		CONDITIONS	MIN	TYP	MAX	UNIT
TEMPERATURE MEASUREMENT						
T_L, T_H Trip Point Accuracy(2)		T_A = 55°C to 60°C, V_S = 3.3 V		±0.2	±1	°C
		T_A = -20 to 60°C, V_S = 1.4 V to 3.6 V		±0.2	±1.5	
		T_A = 60 to 125°C, V_S = 1.4 V to 3.6 V		±0.2	±2.0	
		vs Supply		±0.1		°C/V
Hysteresis		See *Bit Setting vs Hysteresis Window*	1		10	°C
HYSTERESIS SET INPUT						
Input Logic Levels	V_{IH}		0.7 × V_S		3.6	V
	V_{IL}		–0.5		0.3 × V_S	
Input Current	I_{IN}	0 < V_{IN} < 3.6 V			1	µA
SOH INPUT						
Pulldown Resistor Value			80	100	120	kΩ
Input Logic Levels	V_{IH}		0.7 × V_S		3.6	V
	V_{IL}		–0.5		0.3 × V_S	
Input Current		V_{IN} = 3.6 V		36		µA
OUTPUT						
Output Logic Levels	V_{OH}	V_S > 2 V, I_{OH} = 0.5 mA	V_S – 0.4		V_S	V
		V_S < 2 V, I_{OH} = 0.5 mA	V_S – 0.2 × (V_S)		V_S	
	V_{OL}	V_S > 2 V, I_{OL} = 1 mA	0		0.4	
		V_S < 2 V, I_{OL} = 1 mA	0		0.2 × V_S	
POWER SUPPLY						
Specified Supply Voltage Range	V_S		1.4		3.6	V
Power-up Start-up Time		V_S > 1.4 V	20	28	35	ms
Quiescent Current	I_Q	T_A = –55°C to 60°C		3.5	5	µA
		T_A = –40°C to 125°C		4	8	
TEMPERATURE RANGE						
Specified Range			–40		125	°C
Operating Range			–55		130	°C

(1) 100% of all units are production tested at T_A = 25°C. Over temperature specifications are specified by design.
(2) T_L, T_H are device-specific. For example, TMP303A T_L = 0°C, T_H = 60°C; TMP303B T_L = 0°C, T_H = 55°C; TMP303C T_L = –20°C, T_H = 60°C; TMP303D T_L = –15°C, T_H = 125°C; TMP303E T_L = 0°C, T_H = 70°C; TMP303F T_L = 0°C, T_H = 80°C; TMP303G T_L = 0°C, T_H = 90°C

Copyright © 2009–2018, Texas Instruments Incorporated

7.6 Typical Characteristics

At V_S = 3.3 V and T_A = 25°C, unless otherwise noted.

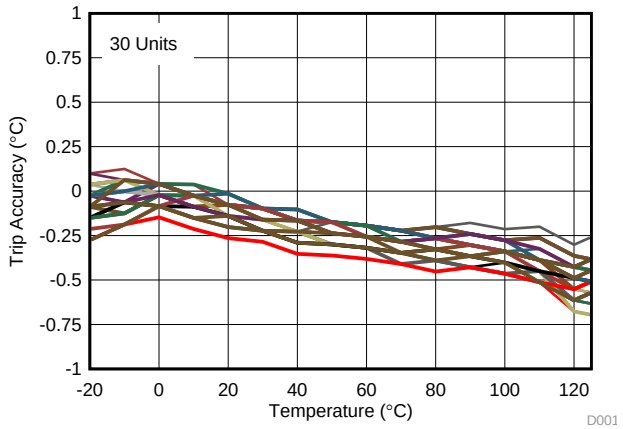

Figure 1. Trip Accuracy Error vs Temperature

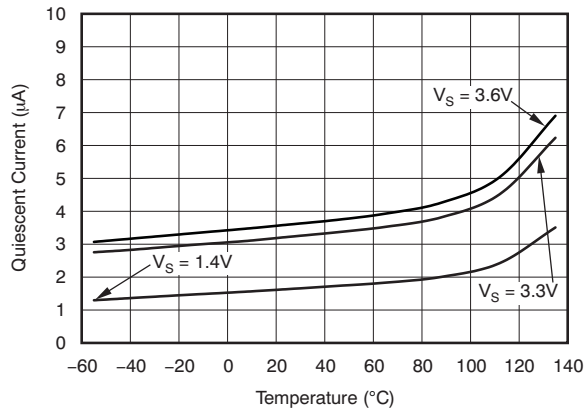

Figure 2. Quiescent Current vs Temperature

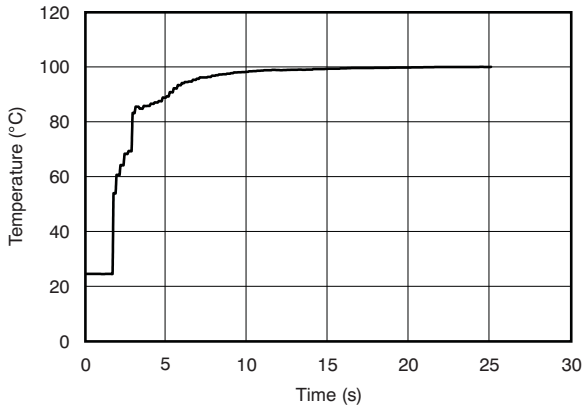

Figure 3. Temperature Step Response in Perfluorinated Fluid at 100°C vs Time

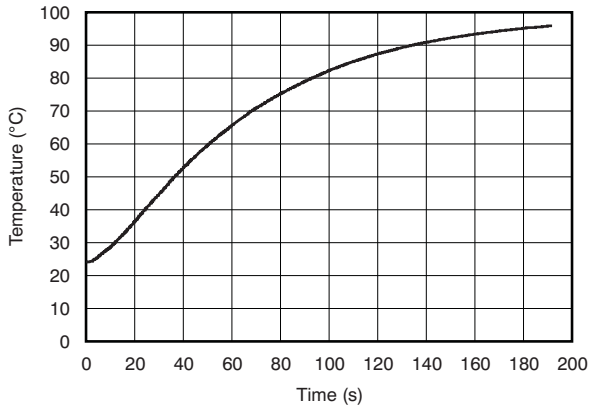

Figure 4. Thermal Step Response in Air at 100°C vs Time

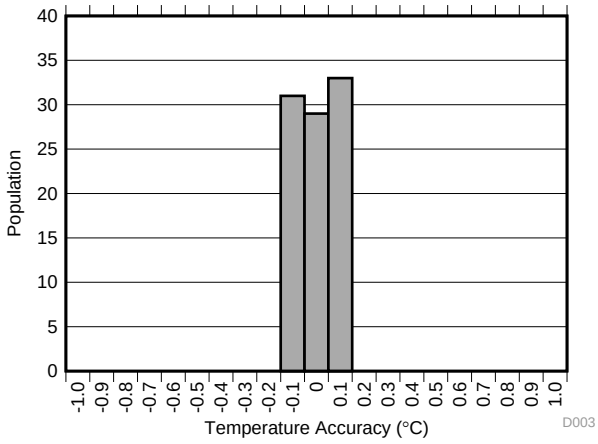

Figure 5. Trip Threshold Accuracy at -20°C to 125°C

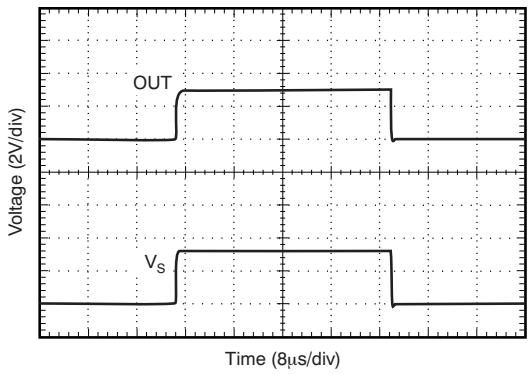

Figure 6. Power-Up and Power-Down Transient Response

Copyright © 2009–2018, Texas Instruments Incorporated

Typical Characteristics (continued)

At V_S = 3.3 V and T_A = 25°C, unless otherwise noted.

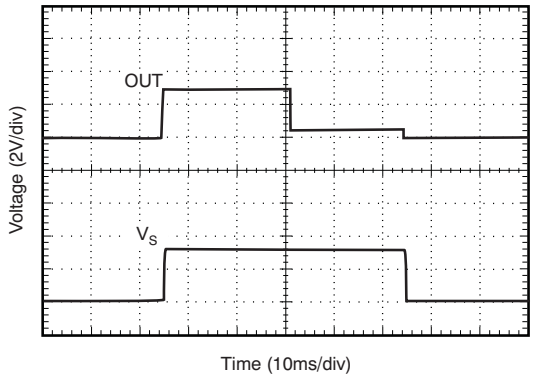

Figure 7. Power-Up, Trip, and Power-Down Response

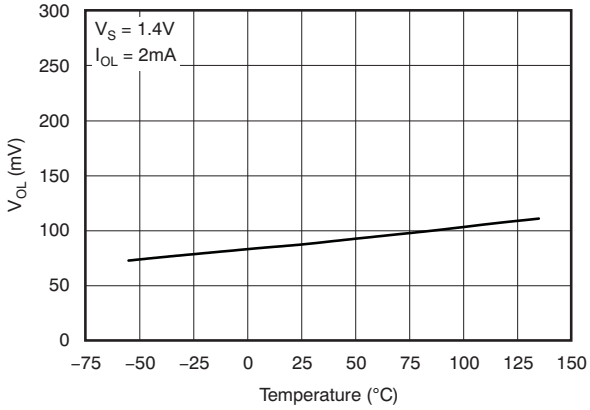

Figure 8. Output Logic Level Low vs Temperature

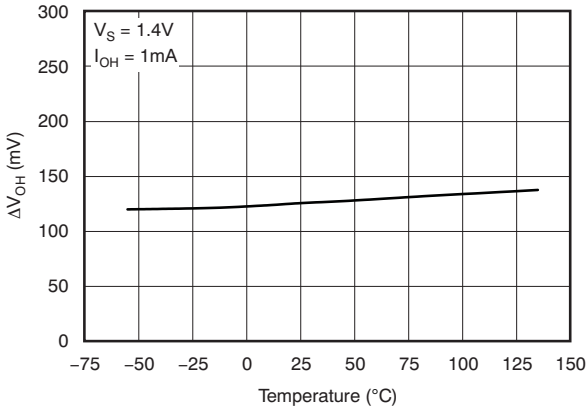

Figure 9. Output Logic Level High vs Temperature

8 Detailed Description

8.1 Overview

The TMP303 devices are temperature switches used in battery-powered applications that require accurate monitoring of a very specific temperature range from 0°C to 60°C (TMP303A), 0°C to 55°C (TMP303B), –20°C to 60°C (TMP303C), –15°C to 125°C (TMP303D), 0°C to 70°C (TMP303E), 0°C to 80°C (TMP303F) or 0°C to 90°C (TMP303G). This functionality is accomplished through the preset trip window and two hysteresis bits, $HYST_{SET0}$ and $HYST_{SET1}$. The preset trip window temperature thresholds are configured at the factory; for other trip points, contact a TI representative. Table 1 summarizes the bit setting versus hysteresis temperature window.

Table 1. Bit Setting vs Hysteresis Window

$HYST_{SET1}$	$HYST_{SET0}$	HYSTERESIS
GND	GND	1°C
GND	V_S	2°C
V_S	GND	5°C
V_S	V_S	10°C

8.2 Functional Block Diagram

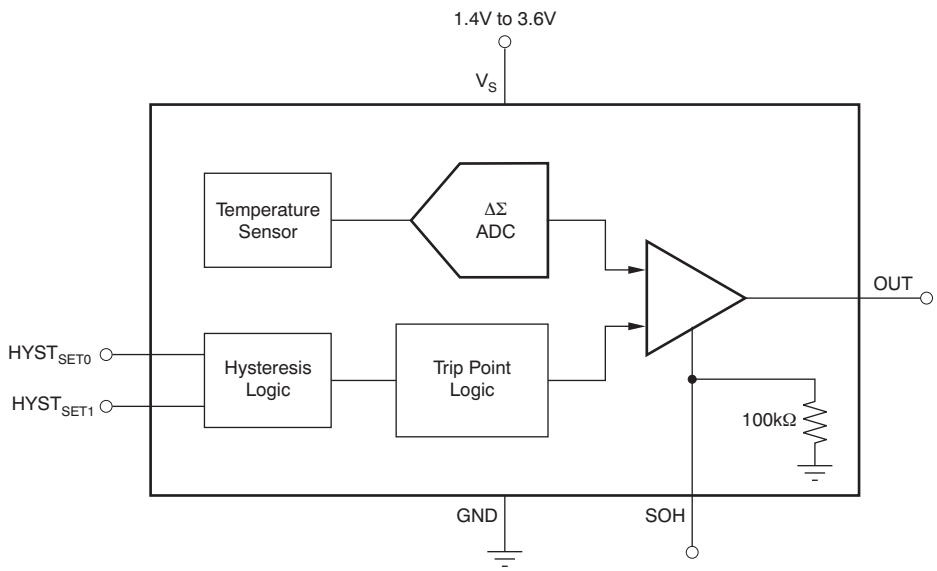

Copyright © 2009–2018, Texas Instruments Incorporated

8.3 Feature Description

8.3.1 $HYST_{SET0}$, $HYST_{SET1}$ and SOH Functionality

The TMP303A temperature trip window resides within the range of 0°C to 60°C, the TMP303B within 0°C to 55°C, the TMP303C within –20°C to 60°C, the TMP303D within –15°C to 125°C, the TMP303E within 0°C to 70°C, the TMP303F within 0°C to 80°C, and the TMP303G within 0°C to 90°C. When any of these trip thresholds is crossed, the output (OUT) changes state from low to high. OUT does not return to its original low state until the temperature crosses the hysteresis threshold and returns within the range of the temperature trip window.

As an example, if the TMP303A is configured with a 10°C hysteresis window (that is, $HYST_{SET0}$ = $HYST_{SET1}$ = V_S), the output does not return to its low state until the temperature either crosses (T_L + *hysteresis*) = 10°C or (T_H – *hysteresis*) = 50°C. The Set Output High (SOH) pin is intended to add test functionality to verify the connectivity of the output (OUT) pin to the system controller or other temperature response system. The SOH pin is internally pulled down to ground with a 100-kΩ resistor. If the SOH pin is grounded or left floating, it has no effect on the behavior of the TMP303A. If the SOH pin is pulled high, the TMP303A immediately forces the output high, regardless of temperature.

NOTE

This response occurs even if the temperature falls within the 0°C to 60°C temperature window.

Figure 10 shows this design in graphical form.

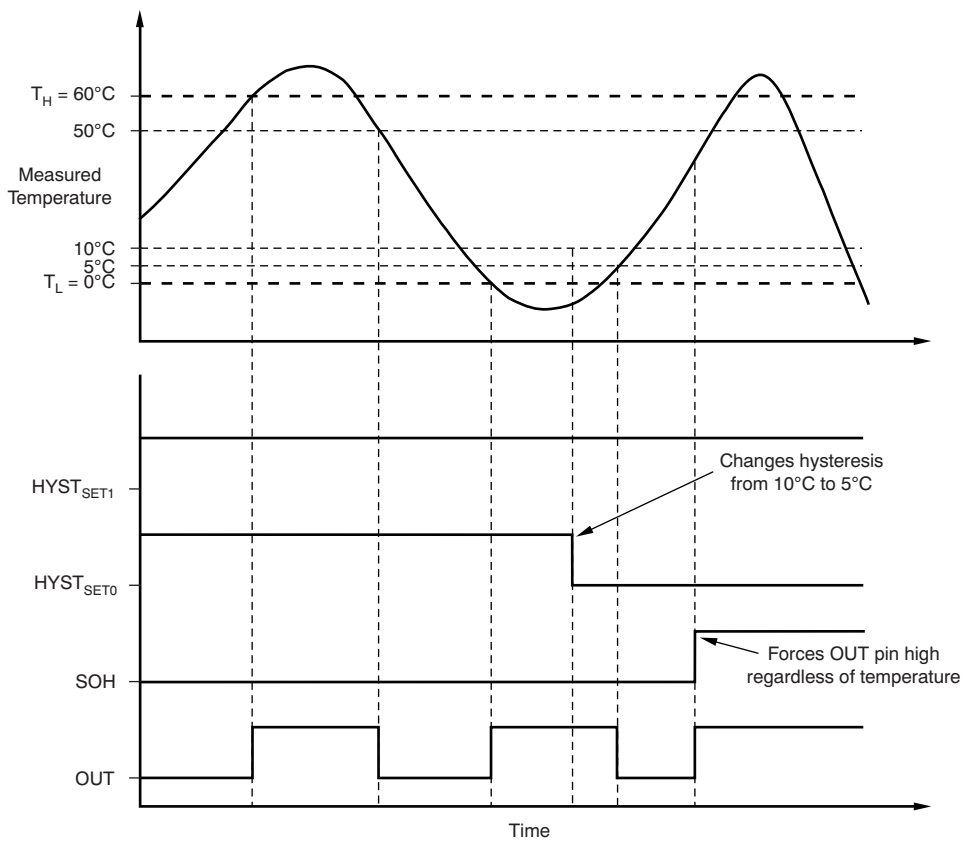

Figure 10. TMP303A Output Transfer Curves With Hysteresis Change from 10°C to 5°C and SOH Functionality

Feature Description (continued)

8.3.2 TMP303 Power Up and Timing

At device power up, the TMP303 exerts OUT = high, and typically requires 26 ms to return to a low state only if the temperature falls within the hysteresis window set by $HYST_{SET0}$ and $HYST_{SET1}$.

The tolerance of the thermal response time is largely a result of the differences in conversion time, which varies from 20 ms to 35 ms; likewise, this conversion does not take place after a power cycle until the supply voltage has reached a level of at least 1.4 V. This sequence is illustrated in Figure 11.

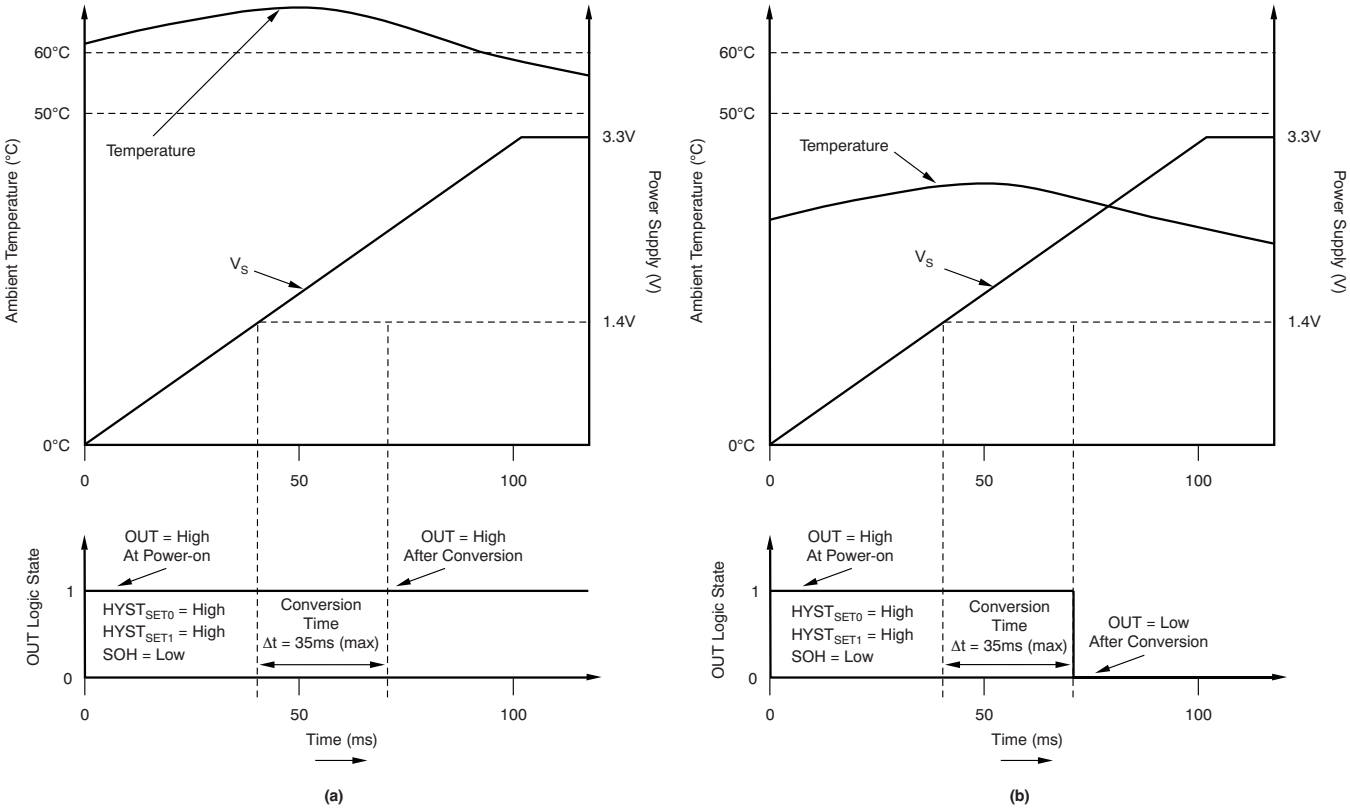

Figure 11. TMP303A Start-Up Delay vs Output Voltage ($HYST_{SET0}$ = $HYST_{SET1}$ = V_S)

After the TMP303 powers up, all successive thermal response results for the device are achieved in a time frame of 0.985 s to 1 s. This period is the minimum time frame required for the push-pull output (OUT) to change its state from high to low (or conversely) when the device is active.

Copyright © 2009–2018, Texas Instruments Incorporated

Feature Description (continued)

A maximum low output voltage is defined as a voltage level equivalent to (0.2 × V_S); likewise, a minimum high-output voltage is defined as (0.8 × V_S). The timing associated with start-up time and conversion is shown in Figure 12.

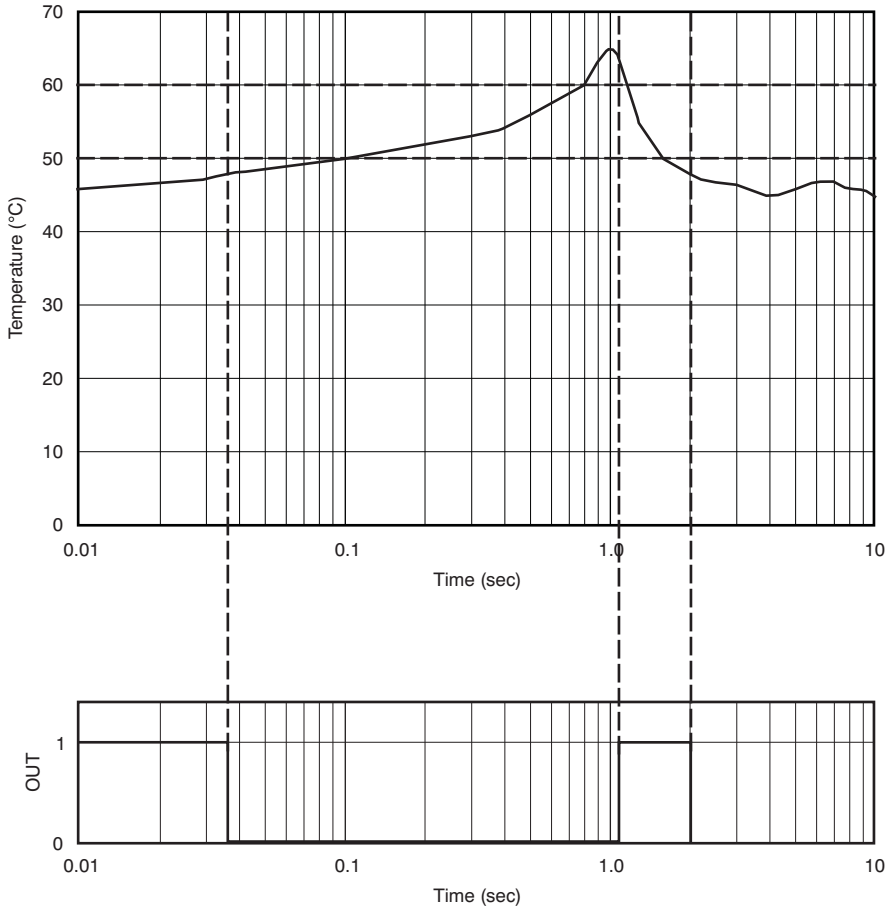

Figure 12. TMP303A Start-Up and Conversion Timing ($HYST_{SET0}$ = $HYST_{SET1}$ = V_S)

8.4 Device Functional Modes

The TMP303 family of devices has a single functional mode. Normal operation for the TMP303 family of devices occurs when the power-supply voltage applied between the V_S pin and GND is within the specified operating range of 1.4 to 3.6 V.The temperature threshold is configured at the factory and the hysteresis is selected by connecting the $HYST_{SET0}$ and $HYST_{SET1}$ pins to either the GND or Vs pins (see Table 1).

9 Application and Implementation

NOTE

Information in the following applications sections is not part of the TI component specification, and TI does not warrant its accuracy or completeness. TI's customers are responsible for determining suitability of components for their purposes. Customers should validate and test their design implementation to confirm system functionality.

9.1 Application Information

The TMP303 family of devices is simple to configure. The TMP303 contains an active high, push-pull output stage and does not require a pullup resistor to V_S for proper operation. The only external component that the device requires is a bypass capacitor. TI strongly recommends using a 0.1-µF capacitor, placed as close as possible to the supply pin.

9.2 Typical Applications

9.2.1 TMP303 Typical Configuration

Figure 13 shows the typical circuit configuration for the TMP303 family of devices. These devices have preprogrammed trip-points. Select the TMP303 device that meets the application temperature trip requirement.

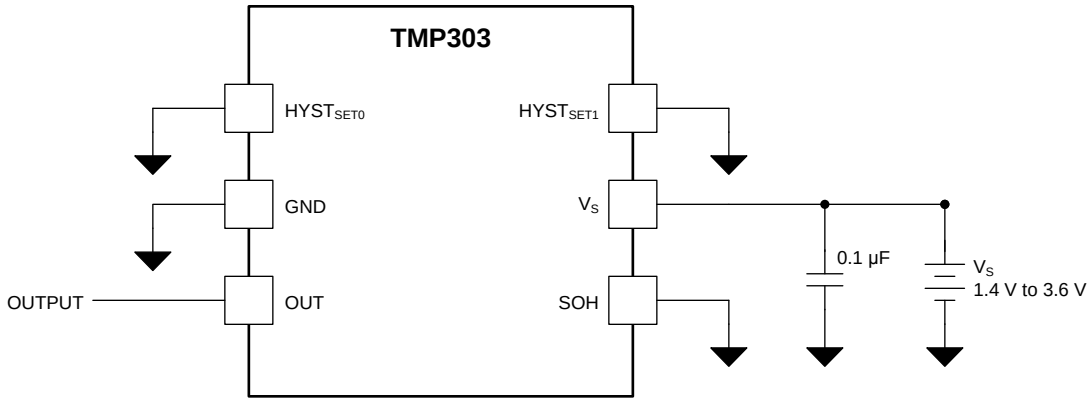

Figure 13. TMP303 Typical Application Configuration Schematic

9.2.1.1 Design Requirements

The TMP303 is a temperature switch commonly used to signal a microprocessor in the event of an over or under temperature condition. The temperature that the TMP303 issues a output is determined by the device preset trip window. The TMP303 issues an output when the temperature threshold is exceeded. To avoid the TMP303 signaling the microprocessor as soon as the temperature drops below the temperature threshold the TMP303 has a built-in hysteresis. The amount of hysteresis is determined by the hysteresis pins, $HYST_{SET0}$ and $HYST_{SET1}$. These pins are digital inputs and must be tied either high or low, according to Table 1.

9.2.1.2 Detailed Design Procedure

Select the appropriate TMP303 device that matches the application requirements; see the *Device Options* table for different trip point ranges. Connect the $HYST_{SET0}$ and $HYST_{SET1}$ pins according to the application requirements; see Table 1. In Figure 13 the TMP303 device is configured with a 1°C hysteresis window (that is, $HYST_{SET0}$ = $HYST_{SET1}$ = GND). Place a 0.1-µF bypass capacitor close to the TMP303 device to reduce the noise coupled from the power supply.

Copyright © 2009–2018, Texas Instruments Incorporated

Typical Applications (continued)

9.2.1.3 Application Curves

Figure 14 and Figure 15 show the TMP303A power-on response with the ambient temperature (T_A) less than 60°C and greater than 60°C respectively. TMP303B, TMP303C, TMP303D, TMP303E, TMP303F, and TMP303G devices behave similarly with regards to power-on response with T_A below or above the trip point.

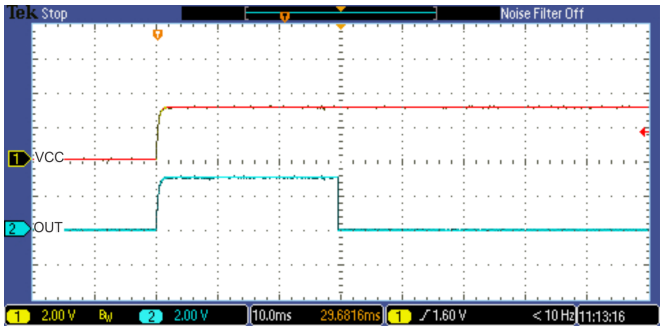

Figure 14. TMP303A Power-On Response, T_A Less Than 60°C

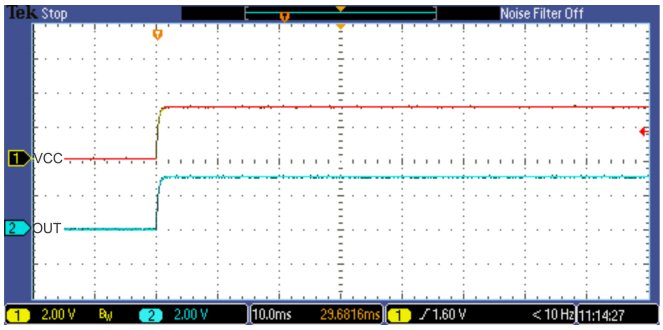

Figure 15. TMP303A Power-On Response, T_A Greater Than 60°C

9.2.2 TMP303 With Switches

Figure 16 shows the most generic implementation of the TMP303 family of devices. Switches are shown connecting the $HYST_{SET0}$ and $HYST_{SET1}$ pins to either V_S or GND. The use of switches is not a requirement; the switches are shown only to illustrate the various pin connection combinations. In practice, connecting the $HYST_{SET0}$ and $HYST_{SET1}$ pins to ground or directly to the V_S pin is sufficient and minimizes board space and cost. If additional flexibility is desired, connections from the $HYST_{SET0}$ and $HYST_{SET1}$ pins can be made through 0-Ω resistors, which can be either populated or not, depending upon the desired connection.

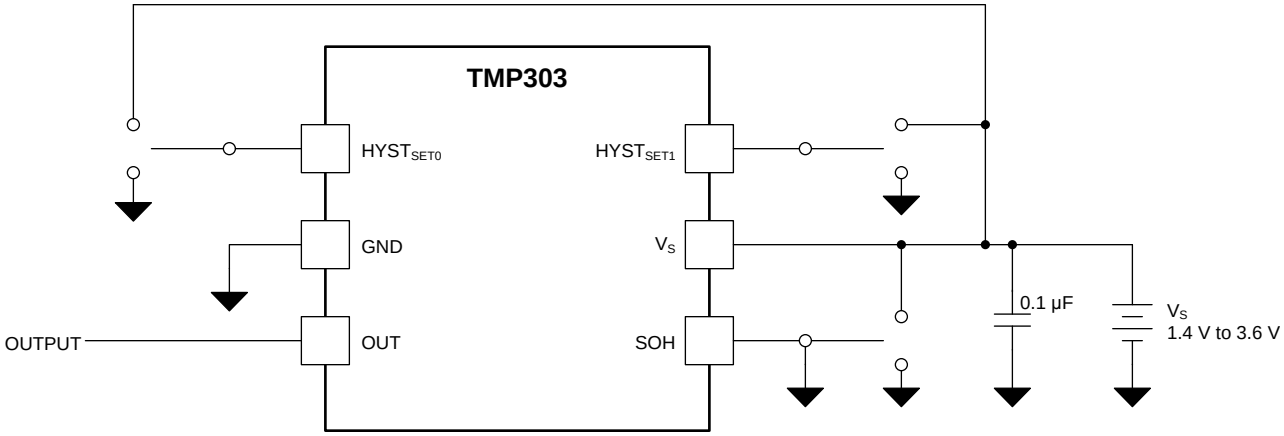

Figure 16. TMP303 With Switches

Typical Applications (continued)

9.2.3 Simple Fan Controller

The circuit in Figure 17 senses system temperature and turns a cooling fan on when the sensor's temperature exceeds a preselected value. The TMP303 device can be used directly to control the fan. The OUT pin is active high, and it can be used directly to drive the DC fan. When temperature is within the temperature limits of the system, the fan turns off, and when the temperature exceeds the trip-point, the fan turns on. In this example, the TMP303A device is used and is configured with a 1°C hysteresis window ($HYST_{SET0}$ = $HYST_{SET1}$ = GND). The TMP303A high trip-point is 60°C. When this trip-point temperature is exceeded, the output (OUT) changes state from low to high. The output does not return to its low state until the temperature decreases below (T_H – *hysteresis*) = 59°C.

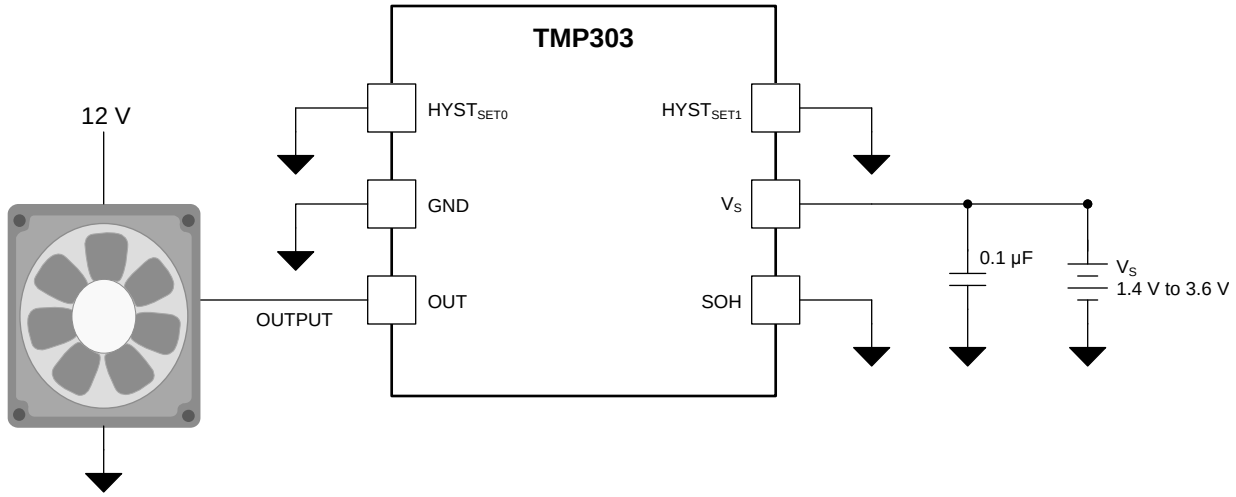

Figure 17. Simple Fan Controller

Copyright © 2009–2018, Texas Instruments Incorporated

Typical Applications (continued)

9.2.4 Wireless Fixed Temperature Heat Detector

Heat detectors are needed in building automation. Conventional heat detectors need cables to supply power and send the information back to a central system. Adding cables can be very costly and technically challenging in old buildings, this leads to wireless battery operated heat detectors as preferred solutions. Running on battery requires designing a very low power system for long haul. TMP303 can be used to design a low power heat detector due to its very low quiescent current (5 µA maximum). The TMP303 device does not require any additional components and can be interfaced with the MCU using only one GPIO. As an example, a wireless transceiver with internal MCU can be used to monitor the TMP303 and communicate with a central system or turn on an alarm in case of temperatures exceeding the trip-point. Figure 18 shows typical connections.

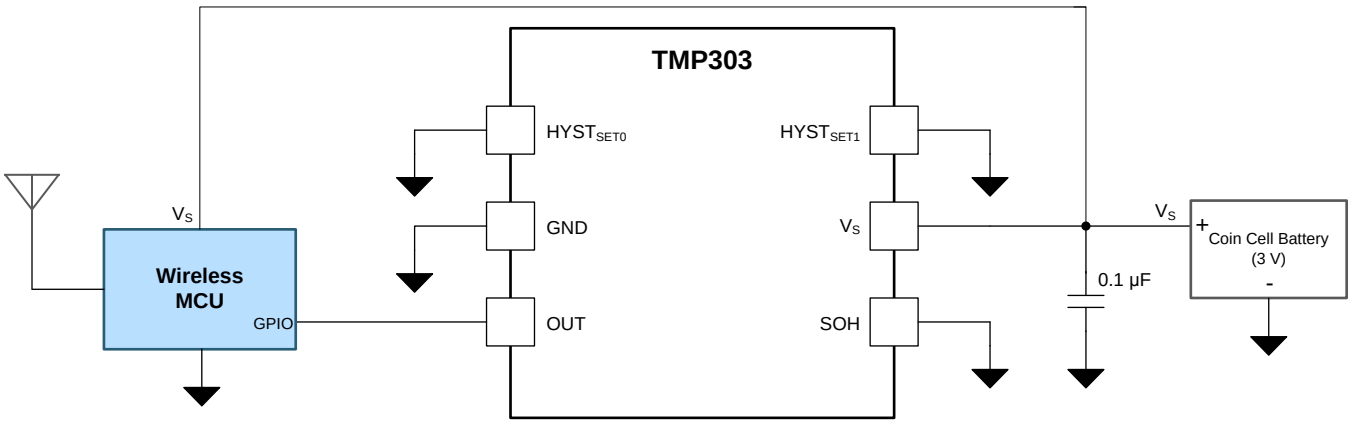

Figure 18. Wireless Fixed Temperature Heat Detector

10 Power Supply Recommendations

The TMP303 family of devices is designed to operate from a single power supply within the range of 1.4 V to 3.6 V. No specific power supply sequencing with respect to any of the input or output pins is required.

11 Layout

11.1 Layout Guidelines

Mount the TMP303 to a PCB as shown in Figure 19. For this example the $HYST_{SET0}$ and $HYST_{SET1}$ pins are connected directly to ground. Connecting these pins to ground configures the device for 1°C hysteresis. The SOH pin is grounded in this layout. Leaving this pin floating has no effect on the behavior of the TMP303.

- Bypass the V_S pin to ground with a low-ESR ceramic bypass capacitor. The typical recommended bypass capacitance is a 0.1-µF ceramic capacitor with a X5R or X7R dielectric. The optimum placement is closest to the V_S and GND pins of the device. Take care in minimizing the loop area formed by the bypass-capacitor connection, the V_S pin, and the GND pin of the IC. Additional bypass capacitance can be added to compensate for noisy or high-impedance power supplies.
- The OUT pin is a push-pull, active-high output and does not require a pullup resistor to V_S.

11.2 Layout Example

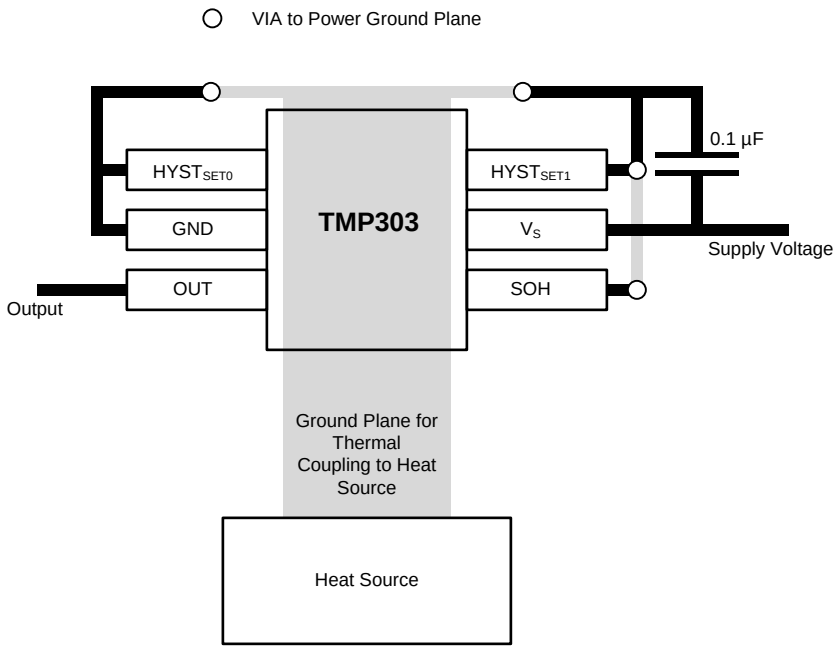

Figure 19. PCB Layout Example

Copyright © 2009–2018, Texas Instruments Incorporated

12 Device and Documentation Support

12.1 Receiving Notification of Documentation Updates

To receive notification of documentation updates, navigate to the device product folder on ti.com. In the upper right corner, click on *Alert me* to register and receive a weekly digest of any product information that has changed. For change details, review the revision history included in any revised document.

12.2 Community Resources

The following links connect to TI community resources. Linked contents are provided "AS IS" by the respective contributors. They do not constitute TI specifications and do not necessarily reflect TI's views; see TI's Terms of Use.

TI E2E™ Online Community ***TI's Engineer-to-Engineer (E2E) Community.*** Created to foster collaboration among engineers. At e2e.ti.com, you can ask questions, share knowledge, explore ideas and help solve problems with fellow engineers.

Design Support ***TI's Design Support*** Quickly find helpful E2E forums along with design support tools and contact information for technical support.

12.3 Trademarks

E2E is a trademark of Texas Instruments.
All other trademarks are the property of their respective owners.

12.4 Electrostatic Discharge Caution

This integrated circuit can be damaged by ESD. Texas Instruments recommends that all integrated circuits be handled with appropriate precautions. Failure to observe proper handling and installation procedures can cause damage.

ESD damage can range from subtle performance degradation to complete device failure. Precision integrated circuits may be more susceptible to damage because very small parametric changes could cause the device not to meet its published specifications.

12.5 Glossary

SLYZ022 — *TI Glossary*.

This glossary lists and explains terms, acronyms, and definitions.

13 Mechanical, Packaging, and Orderable Information

The following pages include mechanical, packaging, and orderable information. This information is the most current data available for the designated devices. This data is subject to change without notice and revision of this document. For browser-based versions of this data sheet, refer to the left-hand navigation.

PACKAGING INFORMATION

Orderable Device	Status (1)	Package Type	Package Drawing	Pins	Package Qty	Eco Plan (2)	Lead/Ball Finish (6)	MSL Peak Temp (3)	Op Temp (°C)	Device Marking (4/5)	Samples
TMP303ADRLR	ACTIVE	SOT-5X3	DRL	6	4000	Green (RoHS & no Sb/Br)	CU NIPDAU | CU NIPDAUAG	Level-1-260C-UNLIM	-40 to 125	OCO	Samples
TMP303ADRLT	ACTIVE	SOT-5X3	DRL	6	250	Green (RoHS & no Sb/Br)	CU NIPDAU | CU NIPDAUAG	Level-1-260C-UNLIM	-40 to 125	OCO	Samples
TMP303BDRLR	ACTIVE	SOT-5X3	DRL	6	4000	Green (RoHS & no Sb/Br)	CU NIPDAU | CU NIPDAUAG	Level-1-260C-UNLIM	-40 to 125	QWM	Samples
TMP303BDRLT	ACTIVE	SOT-5X3	DRL	6	250	Green (RoHS & no Sb/Br)	CU NIPDAU | CU NIPDAUAG	Level-1-260C-UNLIM	-40 to 125	QWM	Samples
TMP303CDRLR	ACTIVE	SOT-5X3	DRL	6	4000	Green (RoHS & no Sb/Br)	CU NIPDAU	Level-1-260C-UNLIM	-40 to 125	11U	Samples
TMP303CDRLT	ACTIVE	SOT-5X3	DRL	6	250	Green (RoHS & no Sb/Br)	CU NIPDAU	Level-1-260C-UNLIM	-40 to 125	11U	Samples
TMP303DDRLR	ACTIVE	SOT-5X3	DRL	6	4000	Green (RoHS & no Sb/Br)	CU NIPDAU	Level-1-260C-UNLIM	-40 to 125	12Z	Samples
TMP303DDRLT	ACTIVE	SOT-5X3	DRL	6	250	Green (RoHS & no Sb/Br)	CU NIPDAU	Level-1-260C-UNLIM	-40 to 125	12Z	Samples
TMP303EDRLR	ACTIVE	SOT-5X3	DRL	6	4000	Green (RoHS & no Sb/Br)	CU NIPDAU	Level-1-260C-UNLIM	-40 to 125	17Z	Samples
TMP303EDRLT	ACTIVE	SOT-5X3	DRL	6	250	Green (RoHS & no Sb/Br)	CU NIPDAU	Level-1-260C-UNLIM	-40 to 125	17Z	Samples
TMP303FDRLR	ACTIVE	SOT-5X3	DRL	6	4000	Green (RoHS & no Sb/Br)	CU NIPDAU	Level-1-260C-UNLIM	-40 to 125	18A	Samples
TMP303FDRLT	ACTIVE	SOT-5X3	DRL	6	250	Green (RoHS & no Sb/Br)	CU NIPDAU	Level-1-260C-UNLIM	-40 to 125	18A	Samples
TMP303GDRLR	ACTIVE	SOT-5X3	DRL	6	4000	Green (RoHS & no Sb/Br)	CU NIPDAU	Level-1-260C-UNLIM	-40 to 125	18B	Samples
TMP303GDRLT	ACTIVE	SOT-5X3	DRL	6	250	Green (RoHS & no Sb/Br)	CU NIPDAU	Level-1-260C-UNLIM	-40 to 125	18B	Samples

(1) The marketing status values are defined as follows:
ACTIVE: Product device recommended for new designs.
LIFEBUY: TI has announced that the device will be discontinued, and a lifetime-buy period is in effect.
NRND: Not recommended for new designs. Device is in production to support existing customers, but TI does not recommend using this part in a new design.
PREVIEW: Device has been announced but is not in production. Samples may or may not be available.
OBSOLETE: TI has discontinued the production of the device.

(2) **RoHS:** TI defines "RoHS" to mean semiconductor products that are compliant with the current EU RoHS requirements for all 10 RoHS substances, including the requirement that RoHS substance do not exceed 0.1% by weight in homogeneous materials. Where designed to be soldered at high temperatures, "RoHS" products are suitable for use in specified lead-free processes. TI may reference these types of products as "Pb-Free".
RoHS Exempt: TI defines "RoHS Exempt" to mean products that contain lead but are compliant with EU RoHS pursuant to a specific EU RoHS exemption.
Green: TI defines "Green" to mean the content of Chlorine (Cl) and Bromine (Br) based flame retardants meet JS709B low halogen requirements of <=1000ppm threshold. Antimony trioxide based flame retardants must also meet the <=1000ppm threshold requirement.

(3) MSL, Peak Temp. - The Moisture Sensitivity Level rating according to the JEDEC industry standard classifications, and peak solder temperature.

(4) There may be additional marking, which relates to the logo, the lot trace code information, or the environmental category on the device.

(5) Multiple Device Markings will be inside parentheses. Only one Device Marking contained in parentheses and separated by a "~" will appear on a device. If a line is indented then it is a continuation of the previous line and the two combined represent the entire Device Marking for that device.

(6) Lead/Ball Finish - Orderable Devices may have multiple material finish options. Finish options are separated by a vertical ruled line. Lead/Ball Finish values may wrap to two lines if the finish value exceeds the maximum column width.

Important Information and Disclaimer: The information provided on this page represents TI's knowledge and belief as of the date that it is provided. TI bases its knowledge and belief on information provided by third parties, and makes no representation or warranty as to the accuracy of such information. Efforts are underway to better integrate information from third parties. TI has taken and continues to take reasonable steps to provide representative and accurate information but may not have conducted destructive testing or chemical analysis on incoming materials and chemicals. TI and TI suppliers consider certain information to be proprietary, and thus CAS numbers and other limited information may not be available for release.

In no event shall TI's liability arising out of such information exceed the total purchase price of the TI part(s) at issue in this document sold by TI to Customer on an annual basis.

TAPE AND REEL INFORMATION

REEL DIMENSIONS

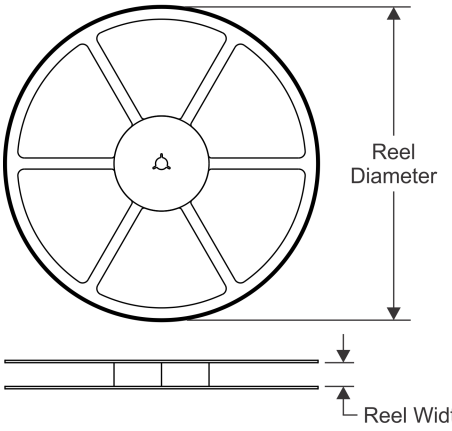

TAPE DIMENSIONS

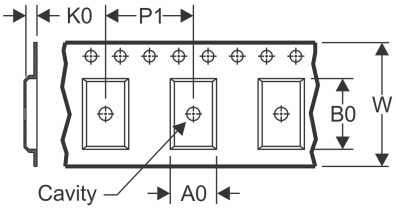

A0	Dimension designed to accommodate the component width
B0	Dimension designed to accommodate the component length
K0	Dimension designed to accommodate the component thickness
W	Overall width of the carrier tape
P1	Pitch between successive cavity centers

QUADRANT ASSIGNMENTS FOR PIN 1 ORIENTATION IN TAPE

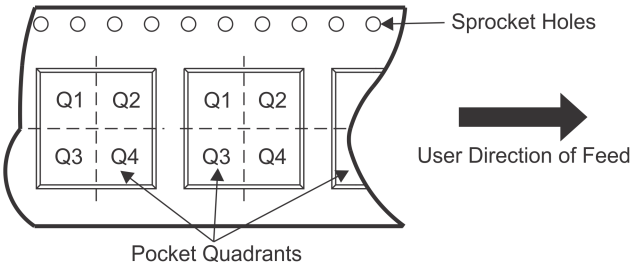

*All dimensions are nominal

Device	Package Type	Package Drawing	Pins	SPQ	Reel Diameter (mm)	Reel Width W1 (mm)	A0 (mm)	B0 (mm)	K0 (mm)	P1 (mm)	W (mm)	Pin1 Quadrant
TMP303ADRLR	SOT-5X3	DRL	6	4000	180.0	9.5	1.78	1.78	0.69	4.0	8.0	Q3
TMP303ADRLR	SOT-5X3	DRL	6	4000	180.0	8.4	1.98	1.78	0.69	4.0	8.0	Q3
TMP303ADRLT	SOT-5X3	DRL	6	250	180.0	8.4	1.98	1.78	0.69	4.0	8.0	Q3
TMP303ADRLT	SOT-5X3	DRL	6	250	180.0	9.5	1.78	1.78	0.69	4.0	8.0	Q3
TMP303BDRLR	SOT-5X3	DRL	6	4000	180.0	9.5	1.78	1.78	0.69	4.0	8.0	Q3
TMP303BDRLR	SOT-5X3	DRL	6	4000	180.0	8.4	1.98	1.78	0.69	4.0	8.0	Q3
TMP303BDRLT	SOT-5X3	DRL	6	250	180.0	8.4	1.98	1.78	0.69	4.0	8.0	Q3
TMP303BDRLT	SOT-5X3	DRL	6	250	180.0	9.5	1.78	1.78	0.69	4.0	8.0	Q3
TMP303CDRLR	SOT-5X3	DRL	6	4000	180.0	9.5	1.78	1.78	0.69	4.0	8.0	Q3
TMP303CDRLT	SOT-5X3	DRL	6	250	180.0	9.5	1.78	1.78	0.69	4.0	8.0	Q3
TMP303DDRLR	SOT-5X3	DRL	6	4000	180.0	9.5	1.78	1.78	0.69	4.0	8.0	Q3
TMP303DDRLT	SOT-5X3	DRL	6	250	180.0	9.5	1.78	1.78	0.69	4.0	8.0	Q3
TMP303EDRLR	SOT-5X3	DRL	6	4000	180.0	9.5	1.78	1.78	0.69	4.0	8.0	Q3
TMP303EDRLT	SOT-5X3	DRL	6	250	180.0	9.5	1.78	1.78	0.69	4.0	8.0	Q3
TMP303FDRLR	SOT-5X3	DRL	6	4000	180.0	9.5	1.78	1.78	0.69	4.0	8.0	Q3
TMP303FDRLT	SOT-5X3	DRL	6	250	180.0	9.5	1.78	1.78	0.69	4.0	8.0	Q3
TMP303GDRLR	SOT-5X3	DRL	6	4000	180.0	9.5	1.78	1.78	0.69	4.0	8.0	Q3
TMP303GDRLT	SOT-5X3	DRL	6	250	180.0	9.5	1.78	1.78	0.69	4.0	8.0	Q3

TAPE AND REEL BOX DIMENSIONS

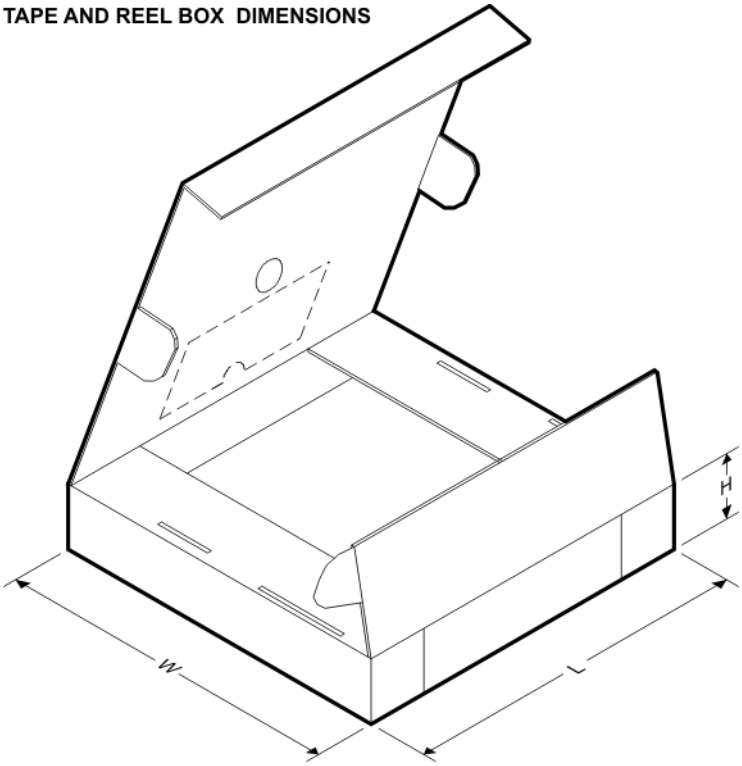

*All dimensions are nominal

Device	Package Type	Package Drawing	Pins	SPQ	Length (mm)	Width (mm)	Height (mm)
TMP303ADRLR	SOT-5X3	DRL	6	4000	184.0	184.0	19.0
TMP303ADRLR	SOT-5X3	DRL	6	4000	202.0	201.0	28.0
TMP303ADRLT	SOT-5X3	DRL	6	250	202.0	201.0	28.0
TMP303ADRLT	SOT-5X3	DRL	6	250	184.0	184.0	19.0
TMP303BDRLR	SOT-5X3	DRL	6	4000	184.0	184.0	19.0
TMP303BDRLR	SOT-5X3	DRL	6	4000	202.0	201.0	28.0
TMP303BDRLT	SOT-5X3	DRL	6	250	202.0	201.0	28.0
TMP303BDRLT	SOT-5X3	DRL	6	250	184.0	184.0	19.0
TMP303CDRLR	SOT-5X3	DRL	6	4000	184.0	184.0	19.0
TMP303CDRLT	SOT-5X3	DRL	6	250	184.0	184.0	19.0
TMP303DDRLR	SOT-5X3	DRL	6	4000	184.0	184.0	19.0
TMP303DDRLT	SOT-5X3	DRL	6	250	184.0	184.0	19.0
TMP303EDRLR	SOT-5X3	DRL	6	4000	184.0	184.0	19.0
TMP303EDRLT	SOT-5X3	DRL	6	250	184.0	184.0	19.0
TMP303FDRLR	SOT-5X3	DRL	6	4000	184.0	184.0	19.0
TMP303FDRLT	SOT-5X3	DRL	6	250	184.0	184.0	19.0
TMP303GDRLR	SOT-5X3	DRL	6	4000	184.0	184.0	19.0
TMP303GDRLT	SOT-5X3	DRL	6	250	184.0	184.0	19.0

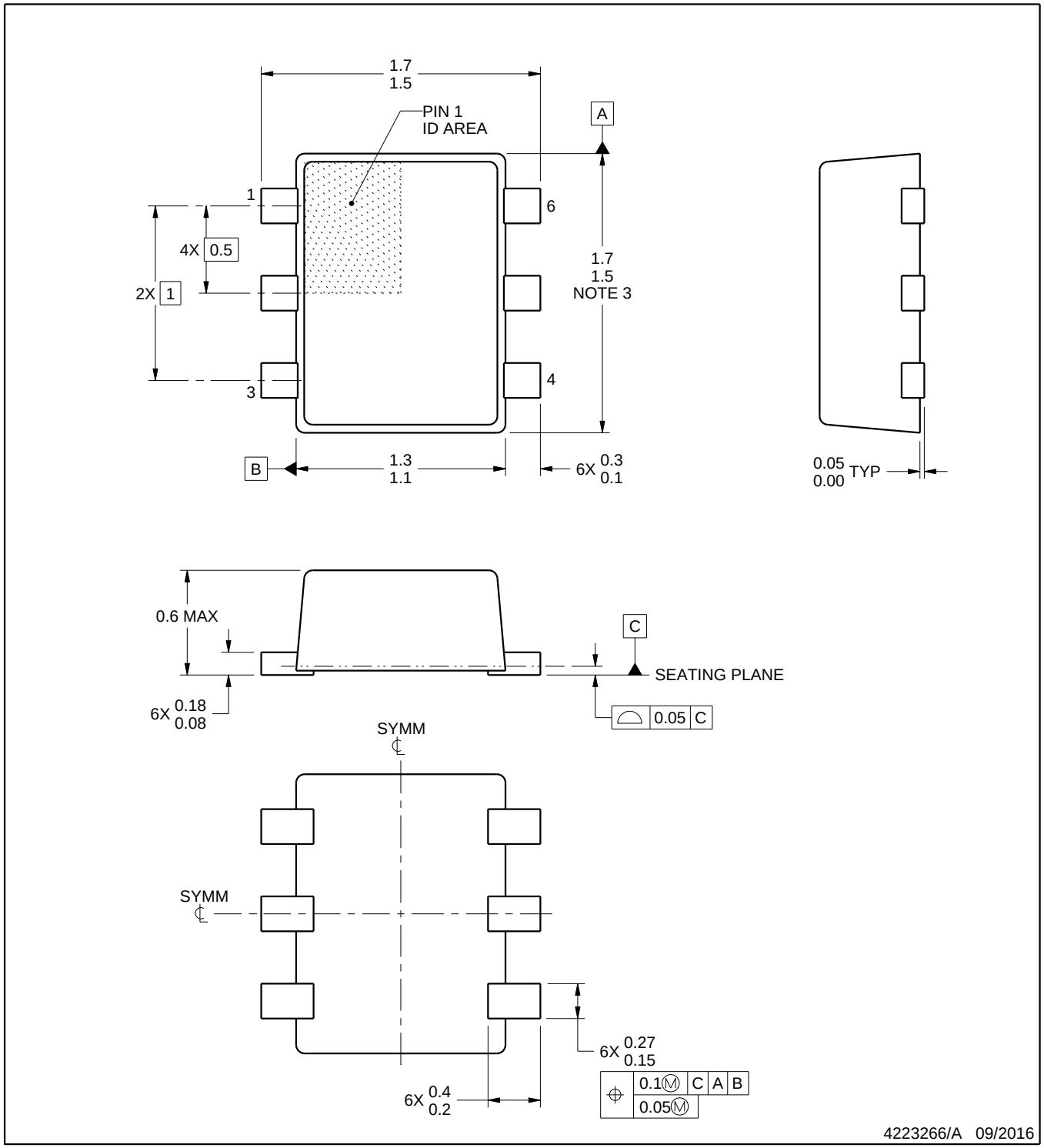

NOTES:

1. All linear dimensions are in millimeters. Any dimensions in parenthesis are for reference only. Dimensioning and tolerancing per ASME Y14.5M.
2. This drawing is subject to change without notice.
3. This dimension does not include mold flash, protrusions, or gate burrs. Mold flash, protrusions, or gate burrs shall not exceed 0.15 mm per side.

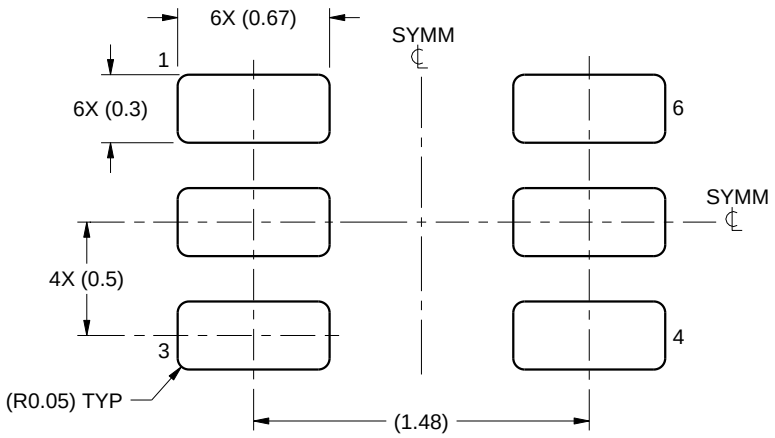

LAND PATTERN EXAMPLE
SCALE:30X

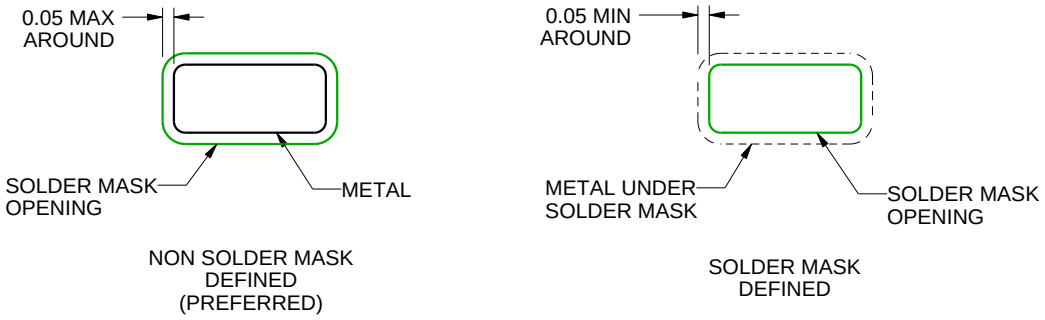

SOLDERMASK DETAILS

4223266/A 09/2016

NOTES: (continued)

4. Publication IPC-7351 may have alternate designs.
5. Solder mask tolerances between and around signal pads can vary based on board fabrication site.

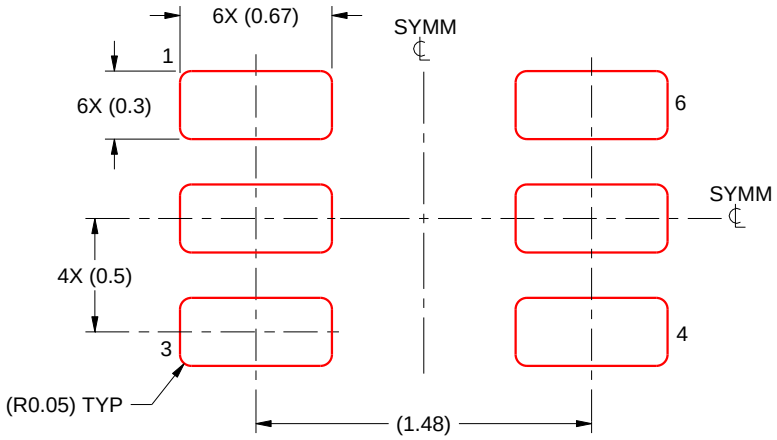

SOLDER PASTE EXAMPLE
BASED ON 0.1 mm THICK STENCIL
SCALE:30X

4223266/A 09/2016

NOTES: (continued)

6. Laser cutting apertures with trapezoidal walls and rounded corners may offer better paste release. IPC-7525 may have alternate design recommendations.
7. Board assembly site may have different recommendations for stencil design.

IMPORTANT NOTICE AND DISCLAIMER

TI PROVIDES TECHNICAL AND RELIABILITY DATA (INCLUDING DATASHEETS), DESIGN RESOURCES (INCLUDING REFERENCE DESIGNS), APPLICATION OR OTHER DESIGN ADVICE, WEB TOOLS, SAFETY INFORMATION, AND OTHER RESOURCES “AS IS” AND WITH ALL FAULTS, AND DISCLAIMS ALL WARRANTIES, EXPRESS AND IMPLIED, INCLUDING WITHOUT LIMITATION ANY IMPLIED WARRANTIES OF MERCHANTABILITY, FITNESS FOR A PARTICULAR PURPOSE OR NON-INFRINGEMENT OF THIRD PARTY INTELLECTUAL PROPERTY RIGHTS.

These resources are intended for skilled developers designing with TI products. You are solely responsible for (1) selecting the appropriate TI products for your application, (2) designing, validating and testing your application, and (3) ensuring your application meets applicable standards, and any other safety, security, or other requirements. These resources are subject to change without notice. TI grants you permission to use these resources only for development of an application that uses the TI products described in the resource. Other reproduction and display of these resources is prohibited. No license is granted to any other TI intellectual property right or to any third party intellectual property right. TI disclaims responsibility for, and you will fully indemnify TI and its representatives against, any claims, damages, costs, losses, and liabilities arising out of your use of these resources.

TI’s products are provided subject to TI’s Terms of Sale (www.ti.com/legal/termsofsale.html) or other applicable terms available either on ti.com or provided in conjunction with such TI products. TI’s provision of these resources does not expand or otherwise alter TI’s applicable warranties or warranty disclaimers for TI products.

Mailing Address: Texas Instruments, Post Office Box 655303, Dallas, Texas 75265
Copyright © 2019, Texas Instruments Incorporated

Looking for pricing, stock, or lifecycle information?

Click below to explore more details on WIN SOURCE:

- View TMP303ADRLR on WIN SOURCE
- Texas Instruments Information

Optimize Your Supply Chain with WIN SOURCE Solutions

- Global Sourcing Solution
- Obsolete Management
- Cost Control Management
- Shortage Management
- Alternative Solution
- Excess Inventory Management