THE DATASHEET OF

MAX8211ESA+T

www.win-source.net 0086-755-83957316

19-0539; Rev 5; 9/08

Microprocessor Voltage Monitors with Programmable Voltage Detection

General Description

Maxim's MAX8211 and MAX8212 are CMOS micropower voltage detectors that warn microprocessors (µPs) of power failures. Each contains a comparator, a 1.5V bandgap reference, and an open-drain n-channel output driver. Two external resistors are used in conjunction with the internal reference to set the trip voltage to the desired level. A hysteresis output is also included, allowing the user to apply positive feedback for noise-free output switching.

The MAX8211 provides a 7mA current-limited output sink whenever the voltage applied to the threshold pin is less than the 1.5V internal reference. In the MAX8212, a voltage greater than 1.5V at the threshold pin turns the output stage on (no current limit).

The CMOS MAX8211/MAX8212 are plug-in replacements for the bipolar ICL8211/ICL8212 in applications where the maximum supply voltage is less than 16.5V. They offer several performance advantages, including reduced supply current, a more tightly controlled bandgap reference, and more available current from the hysteresis output.

Applications

µP Voltage Monitoring

Undervoltage Detection

Overvoltage Detection

Battery-Backup Switching

Power-Supply Fault Monitoring

Low-Battery Detection

Features

- **µP Power-Fail Warning**
- **Improved 2nd Source for ICL8211/ICL8212**
- **Low-Power CMOS Design**
- **5µA Quiescent Current**
- **On-Board Hysteresis Output**
- **±40mV Threshold Accuracy (±3.5%)**
- **2.0V to 16.5V Supply-Voltage Range**
- **Define Output Current Limit (MAX8211)**
- **High Output Current Capability (MAX8212)**

Ordering Information

PART	TEMP RANGE	PIN-PACKAGE
MAX8211CPA	-0°C to +70°C	8 Plastic DIP
MAX8211CSA	-0°C to +70°C	8 SO
MAX8211CUA	-0°C to +70°C	8 µMAX
MAX8211CTY	-0°C to +70°C	8 TO-99
MAX8211EPA	-40°C to +85°C	8 Plastic DIP
MAX8211ESA	-40°C to +85°C	8 SO
MAX8211EJA	-40°C to +85°C	8 CERDIP
MAX8211ETY	-40°C to +85°C	8 TO-99
MAX8211MJA	-55°C to +125°C	8 CERDIP**

Ordering Information continued on last page.

**Contact factory for dice specifications.*

***Contact factory for availability and processing to MIL-STD-883.*

Pin Configurations

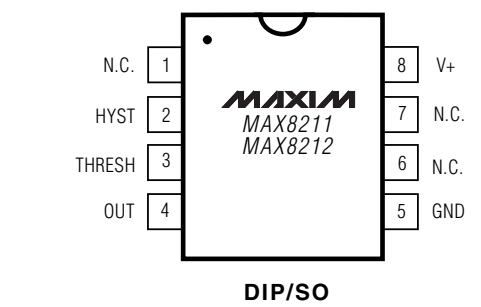

Pin Configurations continued at end of data sheet.

Typical Operating Circuit

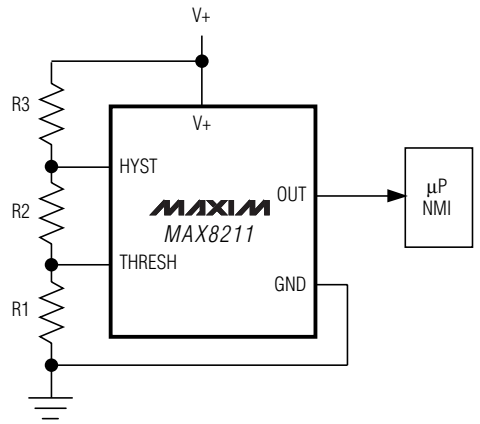

LOGIC-SUPPLY UNDERVOLTAGE DETECTOR
(DETAILED CIRCUIT DIAGRAM—FIGURE 5)

For pricing, delivery, and ordering information, please contact Maxim Direct at 1-888-629-4642, or visit Maxim's website at www.maxim-ic.com.

Microprocessor Voltage Monitors with Programmable Voltage Detection

ABSOLUTE MAXIMUM RATINGS

Supply Voltage .....-0.5V to +18V
Output Voltage .....-0.5V to +18V
Hysteresis.....+0.5V to -18V with respect to (V+ + 0.5V)
Threshold Input Voltage .....-0.5V to (V+ + 0.5V)
Current into Any Terminal .....±50mA
Continuous Power Dissipation (T_A = +70°C)
8-Pin Plastic DIP (derate 9.09mW/°C above +70°C) 727mW
8-Pin SO (derate 5.88mW/°C above +70°C).....471mW
8-Pin CERDIP (derate 8.00mW/°C above +70°C).....640mW
8-Pin TO-99 (derate 6.67mW/°C above +70°C).....533mW
Operating Temperature Ranges
MAX821_C_ _ .....0°C to +70°C
MAX821_E_ _.....-40°C to +85°C
MAX821_M_ _.....-55°C to +125°C
Storage Temperature Range .....-65°C to +150°C
Lead Temperature (soldering, 10s) .....+300°C

Stresses beyond those listed under "Absolute Maximum Ratings" may cause permanent damage to the device. These are stress ratings only, and functional operation of the device at these or any other conditions beyond those indicated in the operational sections of the specifications is not implied. Exposure to absolute maximum rating conditions for extended periods may affect device reliability.

ELECTRICAL CHARACTERISTICS

(V+ = 5V, T_A = +25°C, unless otherwise noted.)

PARAMETER	SYMBOL	CONDITIONS		MAX8211 MIN	MAX8211 TYP	MAX8211 MAX	MAX8212 MIN	MAX8212 TYP	MAX8212 MAX	UNITS
Supply Current	I+	2V ≤ V+ ≤ 16.5V, GND ≤ V_{TH} ≤ V+	T_A = +25°C		5	15		5	15	µA
			T_A = T_{MIN} to T_{MAX}			20			20	
Threshold Trip Voltage	V_{TH}	T_A = +25°C	V+ = 16.5V, I_{OUT} = 4mA	1.11		1.19	1.11		1.19	V
			V+ = 2V, I_{OUT} = 500µA							
		T_A = T_{MIN} to T_{MAX}	V+ = 16.5V, I_{OUT} = 3mA	1.05		1.25	1.05		1.25	
			V+ = 2.2V, I_{OUT} = 500µA							
Threshold Voltage Disparity between Output and Hysteresis Output	V_{THP}	I_{OUT} = 4mA, I_{HYST} = 1mA			±0.1			±0.1		mV
Guaranteed Operating Supply Voltage Range	V_{SUPP}	T_A = +25°C		2.0		16.5	2.0		16.5	V
		T_A = T_{MIN} to T_{MAX}		2.2		16.5	2.2		16.5	
Typical Operating Supply Voltage Range	V_{SUPP}			1.5		16.5	1.5		16.5	V
Threshold Voltage Temperature Coefficient	$\Delta V_{TH}/\Delta T$	See Figure 4			-200			-200		ppm/°C
Variation of Threshold Voltage with Supply Voltage	ΔV_{TH}	V+ = 4.5V to 5.5V			1.0			0.2		mV
Threshold Input Current	I_{TH}	0V ≤ V_{TH} ≤ V+, T_A = +25°C			0.01	10		0.01	10	nA
		T_A = T_{MIN} to T_{MAX}				20			20	
Output Leakage Current	I_{LOUT}	T_A = T_{MIN} to T_{MAX}, C/E temp. ranges	V_{OUT} = 16.5V, V_{TH} = 1.0V						10	µA
			V_{OUT} = 16.5V, V_{TH} = 1.3V			10				
			V_{OUT} = 5V, V_{TH} = 1.0V						1	
			V_{OUT} = 5V, V_{TH} = 1.3V			1				
		T_A = T_{MIN} to T_{MAX}, M temp. range	V_{OUT} = 16.5V, V_{TH} = 0.9V						30	
			V_{OUT} = 16.5V, V_{TH} = 1.3V			30				
			V_{OUT} = 5V, V_{TH} = 0.9V						10	
			V_{OUT} = 5V, V_{TH} = 1.3V			10				

ELECTRICAL CHARACTERISTICS (continued)

($V+ = 5V$, $T_A = +25°C$, unless otherwise noted.)

PARAMETER	SYMBOL	CONDITIONS		MAX8211 MIN	MAX8211 TYP	MAX8211 MAX	MAX8212 MIN	MAX8212 TYP	MAX8212 MAX	UNITS
Output Saturation Voltage	V_{OL}	I_{OUT} = 2mA, V_{TH} = 1.0V			0.17	0.4				V
		I_{OUT} = 2mA, V_{TH} = 1.3V						0.17	0.4	
Maximum Available Output Current	I_{OH}	C temp. range, V_{OUT} = 5V	V_{TH} = 1.0V (Note 1)	4	7.0					mA
			V_{TH} = 1.3V (Note 2)				12	35		
Hysteresis Leakage Current	I_{LHYS}	$T_A = T_{MIN}$ to T_{MAX}, C/E temp. ranges, V+ = 16.5V, V_{TH} = 1.0V, V_{HYST} = -16.5V with respect to V+				0.1			0.1	µA
		$T_A = T_{MIN}$ to T_{MAX}, M temp. range, V+ = 16.5V, V_{TH} = 0.9V, V_{HYST} = -16.5V with respect to V+				3			3	
Hysteresis Saturation Voltage	V_{HYS} (MAX)	I_{HYST} = 0.5mA, V_{TH} = 1.3V, measured with respect to V+			-0.1	-0.2		-0.1	-0.2	V
Maximum Available Hysteresis Current	V_{HYS} (MAX)	V_{TH} = 1.3V, V_{HYS} = 0V		2	10		2	10		mA

Note 1: The maximum output current of the MAX8211 is limited by design to 30mA under any operating condition. The output voltage may be sustained at any voltage up to +16.5V as long as the maximum power dissipation of the device is not exceeded.

Note 2: The maximum output current of the MAX8212 is not defined, and systems using the MAX8212 must therefore ensure that the output current does not exceed 50mA and that the maximum power dissipation of the device is not exceeded.

Detailed Description

As shown in the block diagrams of Figures 1 and 2, the MAX8211 and MAX8212 each contain a 1.15V reference, a comparator, an open-drain n-channel output transistor, and an open-drain p-channel hysteresis output. The MAX8211 output n-channel turns on when the voltage applied to the THRESH pin is less than the internal reference (1.15V). The sink current is limited to 7mA (typical), allowing direct drive of an LED without a series resistor. The MAX8212 output turns on when the voltage applied to THRESH is greater than the internal reference. It is not current limited, and will typically sink 35mA.

Compatibility with ICL8211/ICL8212

The CMOS MAX8211/MAX8212 are plug-in replacements for the bipolar ICL8211/ICL8212 in most applications. The use of CMOS technology has several advantages. The quiescent supply current is much less than in the bipolar parts. Higher-value resistors can also be used

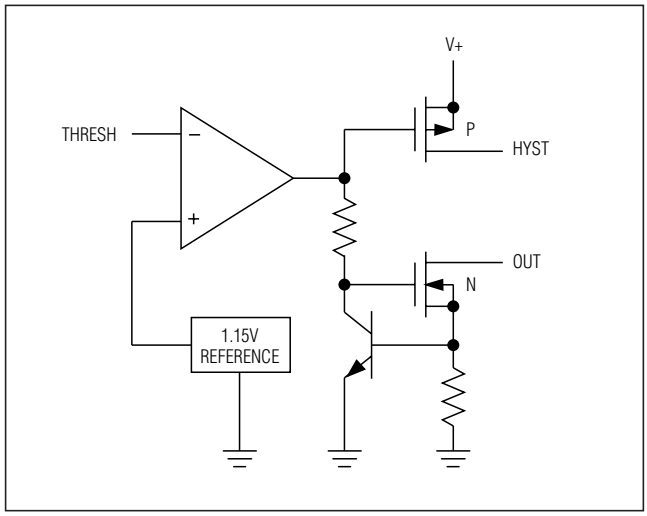

Figure 1. MAX8211 Block Diagram

Microprocessor Voltage Monitors with Programmable Voltage Detection

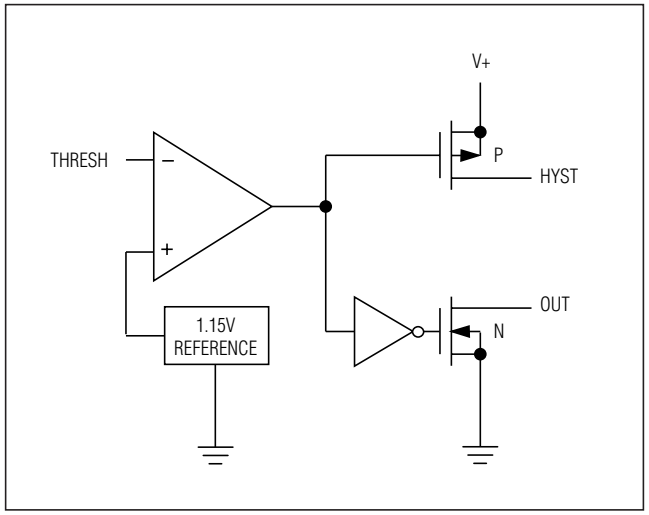

Figure 2. MAX8212 Block Diagram

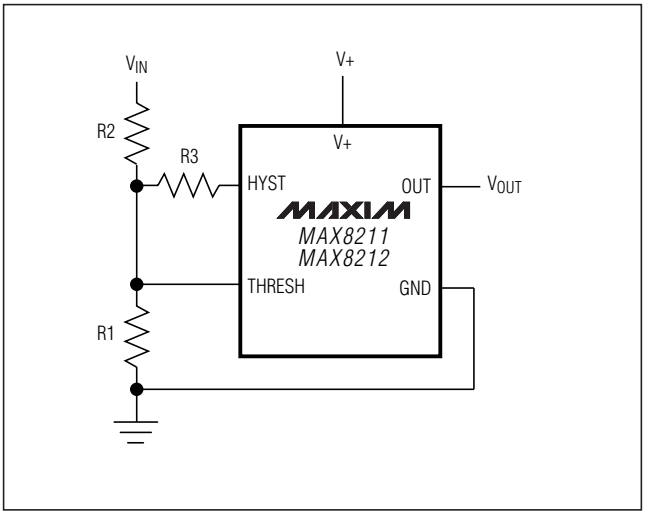

Figure 3. Basic Overvoltage/Undervoltage Circuit

in the networks that set up the trip voltage, since the comparator input (THRESH pin) is a low-leakage MOSFET transistor. This further reduces system current drain. The tolerance of the internal reference has also been significantly improved, allowing for more precise voltage detection without the use of potentiometers.

The available current from the HYST output has been increased from 21µA to 10mA, making the hysteresis feature easier to use. The disparity between the HYST output and the voltage required at THRESH to switch the OUT pin has also been reduced in the MAX8211 from 8mV to 0.1mV to eliminate output "chatter" or oscillation.

Most voltage detection circuits operate with supplies of 15V or less; in these applications, the MAX8211/MAX8212 will replace ICL8211/ICL8212s with the performance advantages described above. However, note that the CMOS parts have an absolute maximum supply-voltage rating of 18V, and should never be used in applications where this rating could be exceeded. Exercise caution when replacing ICL8211/ICL8212s in closed-loop applications such as programmable zeners. Although neither the ICL8211/ICL8212 nor the MAX8211/MAX8212 are internally compensated, the CMOS parts have higher gain and may not be stable for the external compensation-capacitor values used in lower-gain ICL8211/ICL8212 circuits.

Applications Information

Basic Voltage Detectors

Figure 3 shows the basic circuit for both undervoltage detection (MAX8211) and overvoltage detection (MAX8212). For applications where no hysteresis is needed, R3 should be omitted. The ratio of R1 to R2 is then chosen such that, for the desired trip voltage at V_{IN}, 1.15V is applied to the THRESH pin. Since the comparator inputs are very low-leakage MOSFET transistors, the MAX8211/MAX8212 can use much higher resistors values in the attenuator network than can the bipolar ICL8211/ICL8212. See Table 1 for switching delays.

Table 1. Switching Delays

TYPICAL DELAYS	MAX8211	MAX8212
$t_{(on)}$	40µs	250µs
$t_{(off)}$	1.5ms	3ms

Voltage Detectors with Hysteresis

To ensure noise-free output switching, hysteresis is frequently used in voltage detectors. For both the MAX8211 and MAX8212 the HYST output is on for threshold voltages greater than 1.15V. R3 (Figure 3) controls the amount of current (positive feedback) supplied from the HYST output to the mid-point of the resistor divider, and hence the magnitude of the hysteresis, or dead-band.

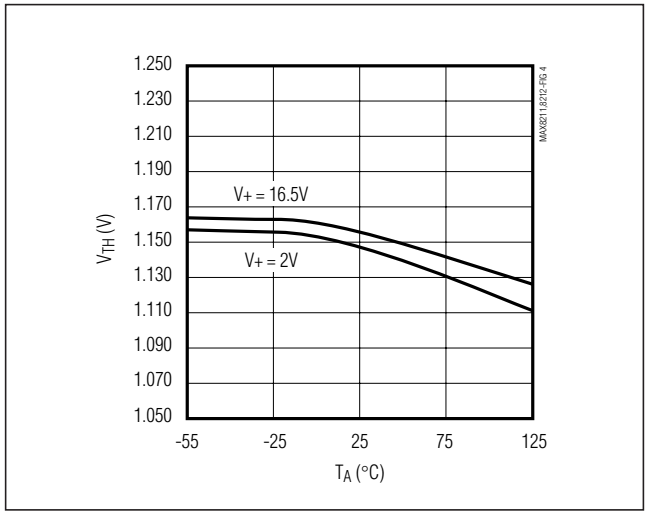

Figure 4. MAX8211/MAX8212 Threshold Trip Voltage vs. Ambient Temperature

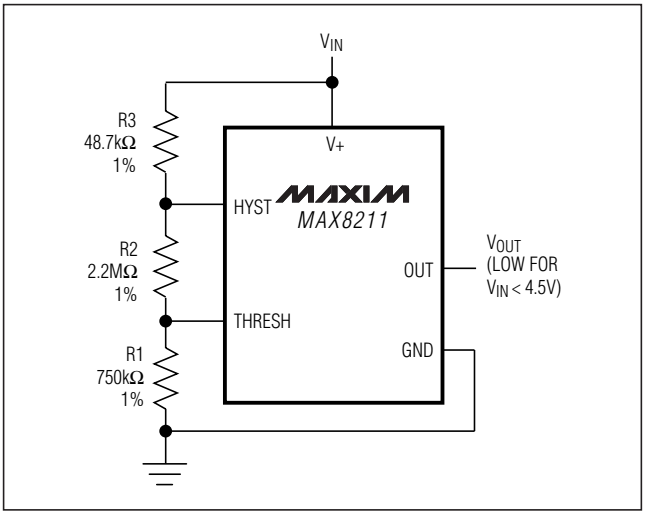

Figure 5. MAX8211 Logic-Supply Low-Voltage Detector

Calculate resistor values for Figure 3 as follows:

1) Choose a value for R1. Typical values are in the 10kΩ to 10MΩ range.
2) Calculate R2 for the desired upper trip point V_U using the formula:

$$R2 = R1 \times \frac{(V_U - V_{TH})}{V_{TH}} = R1 \times \frac{(V_U - 1.15V)}{1.15V}$$

3) Calculate R3 for the desired amount of hysteresis, where V_L is the lower trip point:

$$R3 = R2 \times \frac{(V+ - V_{TH})}{(V_U - V_L)} = R2 \times \frac{(V+ - 1.15V)}{(V_U - V_L)}$$

or, if $V+ = V_{IN}$:

$$R3 = R2 \times \frac{(V_L - V_{TH})}{(V_U - V_L)} = R2 \times \frac{(V_L - 1.15V)}{(V_U - V_L)}$$

Figure 5 shows an alternate circuit, suitable only when the voltage being detected is also the power-supply voltage for the MAX8211 or MAX8212.

Calculate resistor values for Figure 5 as follows:

1) Choose a value for R1. Typical values are in the 10kΩ to 10MΩ range.
2) Calculate R2:

$$R2 = R1 \times \frac{(V_L - V_{TH})}{V_{TH}} = R1 \times \frac{(V_L - 1.15V)}{1.15V}$$

3) Calculate R3:

$$R3 = R1 \times \frac{(V_U - V_L)}{1.15V}$$

Low-Voltage Detector for Logic Supply

The circuit of Figure 5 will detect when a 5.0V (nominal) supply goes below 4.5V, which is the V_{MIN} normally specified in logic systems. The selected resistor values ensure that false undervoltage alarms will not be generated, even with worst-case threshold trip values and resistor tolerances. R3 provides approximately 75mV of hysteresis.

Microprocessor Voltage Monitors with Programmable Voltage Detection

Pin Configurations (continued)

TOP VIEW

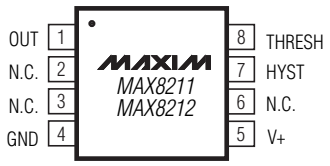

µMAX

TOP VIEW

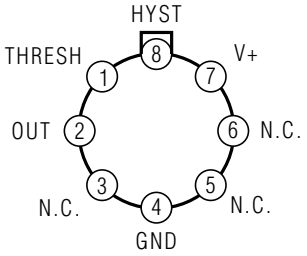

TO-99*

* CASE IS CONNECTED TO PIN 7 ON TV PACKAGE.
CASE IS CONNECTED TO PIN 4 ON TY PACKAGE.

Ordering Information (continued)

PART	TEMP RANGE	PIN-PACKAGE
MAX8211MSA/PR	-55°C to +125°C	8 SO**
MAX8211MSA/PR-T	-55°C to +125°C	8 SO**
MAX8211MTV	-55°C to +125°C	8 TO-99**
MAX8212CPA	-0°C to +70°C	8 Plastic DIP
MAX8212CSA	-0°C to +70°C	8 SO
MAX8212CUA	-0°C to +70°C	8 µMAX
MAX8212CTY	-0°C to +70°C	8 TO-99
MAX8212EPA	-40°C to +85°C	8 Plastic DIP
MAX8212ESA	-40°C to +85°C	8 SO
MAX8212EJA	-40°C to +85°C	8 CERDIP
MAX8212ETY	-40°C to +85°C	8 TO-99
MAX8212MJA	-55°C to +125°C	8 CERDIP**
MAX8212MSA/PR	-55°C to +125°C	8 SO**
MAX8212MSA/PR-T	-55°C to +125°C	8 SO**
MAX8212MTV	-55°C to +125°C	8 TO-99**

**Contact factory for dice specifications.*
***Contact factory for availability and processing to MIL-STD-883.*

Package Information

For the latest package outline information and land patterns, go to **www.maxim-ic.com/packages**.

PACKAGE TYPE	PACKAGE CODE	DOCUMENT NO.
8 CERDIP	J8-2	21-0045
8 Plastic DIP	P8-1	21-0043
8 SO	S8-2	21-0041
8 TO-99	T99-8	21-0022
8 µMAX	U8-1	21-0036

Revision History

REVISION NUMBER	REVISION DATE	DESCRIPTION	PAGES CHANGED
0	1/91	Initial release	—
4	9/02	Updated Figure 5.	5
5	9/08	Updated *Ordering Information*.	1, 6

Maxim cannot assume responsibility for use of any circuitry other than circuitry entirely embodied in a Maxim product. No circuit patent licenses are implied. Maxim reserves the right to change the circuitry and specifications without notice at any time.

© 2008 Maxim Integrated Products MAXIM is a registered trademark of Maxim Integrated Products, Inc.

Looking for pricing, stock, or lifecycle information?

Click below to explore more details on WIN SOURCE:

- View MAX8211ESA+T on WIN SOURCE
- Maxim Integrated Information

Optimize Your Supply Chain with WIN SOURCE Solutions

- Global Sourcing Solution
- Obsolete Management
- Cost Control Management
- Shortage Management
- Alternative Solution
- Excess Inventory Management