THE DATASHEET OF

LTC1779ES6#TRPBF

www.win-source.net 0086-755-83957316

250mA Current Mode Step-Down DC/DC Converter in ThinSOT

FEATURES

- **High Efficiency: Up to 94%**
- **250mA Output Current**
- **Wide V_{IN} Range: 2.5V to 9.8V**
- **550kHz Constant Frequency Operation**
- **Burst Mode™ Operation at Light Load**
- **Low Dropout: 100% Duty Cycle**
- 0.8V Reference Allows Low Output Voltages
- ±2.5% Reference Accuracy
- Current Mode Operation for Excellent Line and Load Transient Response
- Low Quiescent Current: 135µA
- Shutdown Mode Draws Only 8µA Supply Current
- Low Profile (1mm) ThinSOT™ Package

APPLICATIONS

- 1- or 2-Cell Lithium-Ion-Powered Applications
- Cellular Telephones
- Wireless Modems
- Portable Computers
- Distributed 3.3V, 2.5V or 1.8V Power Systems
- Scanners

DESCRIPTION

The LTC®1779 is a constant frequency current mode step-down DC/DC converter in a 6-lead ThinSOT package. The part operates with a 2.5V to 9.8V input and can provide up to 250mA of output current. Current mode control provides excellent AC and DC load and line regulation. The device incorporates an accurate undervoltage lockout feature that shuts down the LTC1779 when the input voltage falls below 2V.

The LTC1779 boasts a ±2.5% output voltage accuracy and consumes only 135µA of quiescent current. For applications where efficiency is a prime consideration, the LTC1779 is configured for Burst Mode operation, which enhances efficiency at low output current.

To further maximize the life of a battery source, the internal P-channel MOSFET is turned on continuously in dropout (100% duty cycle). In shutdown, the device draws a mere 8µA. High constant operating frequency of 550kHz allows the use of a small external inductor.

The LTC1779 is available in a low profile (1mm) ThinSOT package.

, LT, LTC, LTM, Burst Mode, Linear Technology and the Linear logo are registered trademarks and ThinSOT is a trademark of Linear Technology Corporation. All other trademarks are the property of their respective owners.

TYPICAL APPLICATION

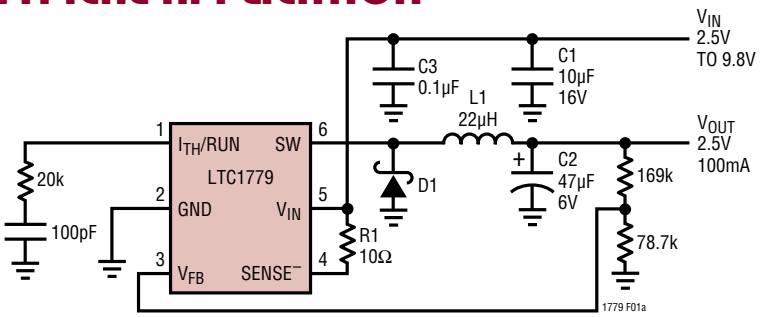

C1: TAIYO YUDEN CERAMIC EMK325BJ106MNT
C2: SANYO POSCAP 6TPA47M
D1: IR10BQ015
L1: COILTRONICS UP1B220

Figure 1. LTC1779 High Efficiency 2.5V/100mA Step-Down Converter

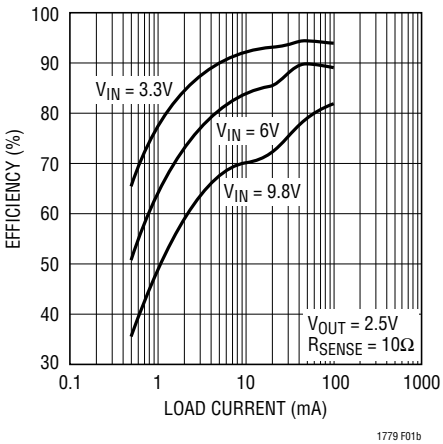

ABSOLUTE MAXIMUM RATINGS

(Note 1)

Input Supply Voltage (V_{IN}) ..... –0.3V to 10V
SENSE⁻, SW Voltages ..... –0.3V to (V_{IN} + 0.3V)
V_{FB}, I_{TH}/RUN Voltages ..... –0.3V to 2.4V
SW Peak Output Current (<10µs) 0.5A
Storage Ambient Temperature Range ....–65°C to 150°C
Operating Temperature Range (Note 2)....–40°C to 85°C
Junction Temperature (Note 3) ..... 150°C
Lead Temperature (Soldering, 10 sec)..... 300°C

PIN CONFIGURATION

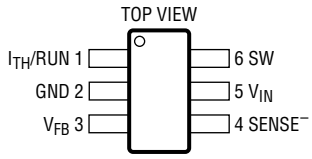

S6 PACKAGE
6-LEAD PLASTIC SOT-23

T_{JMAX} = 150°C, θ_{JA} = 230°C/W

ORDER INFORMATION

LEAD FREE FINISH	TAPE AND REEL	PART MARKING	PACKAGE DESCRIPTION	TEMPERATURE RANGE
LTC1779ES6#PBF	LTC1779ES6#TRPBF	LTLP	6-Lead Plastic SOT-23	–40°C to 85°C

Consult LTC Marketing for parts specified with wider operating temperature ranges.
Consult LTC Marketing for information on nonstandard lead based finish parts.

For more information on lead free part marking, go to: http://www.linear.com/leadfree/
For more information on tape and reel specifications, go to: http://www.linear.com/tapeandreel/

ELECTRICAL CHARACTERISTICS

The ● denotes specifications that apply over the full operating temperature range, otherwise specifications are at T_A = 25°C. V_{IN} = 4.2V unless otherwise specified. (Note 2)

PARAMETER	CONDITIONS		MIN	TYP	MAX	UNITS
Input DC Supply Current Normal Operation Shutdown UVLO	Typicals at V_{IN} = 4.2V (Note 4) 2.5V ≤ V_{IN} ≤ 9.8V 2.5V ≤ V_{IN} ≤ 9.8V, V_{ITH}/RUN = 0V V_{IN} < UVLO Threshold			 135 8 1	 240 22 13	 µA µA µA
Undervoltage Lockout Threshold	V_{IN} Falling V_{IN} Rising	● 	1.60	2.0 2.1	 2.5	V V
Shutdown Threshold (at I_{TH}/RUN)		●	0.15	0.325	0.5	V
Start-Up Current Source	V_{ITH}/RUN = 0V		0.25	0.5	0.85	µA
Regulated Feedback Voltage	(Note 5) 0°C to 70°C (Note 5) –40°C to 85°C	● ●	0.780 0.770	0.800 0.800	0.820 0.830	V V
Output Voltage Line Regulation	2.5V ≤ V_{IN} ≤ 9.8V (Note 5)		–3	0	3	mV/V
Output Voltage Load Regulation	I_{TH}/RUN Sinking 5µA (Note 5) I_{TH}/RUN Sourcing 5µA (Note 5)			2.5 2.5		mV/µA mV/µA
V_{FB} Input Current	(Note 5)			5	25	nA
Overvoltage Protect Threshold	Measured at V_{FB}		0.820	0.860	0.895	V
Overvoltage Protect Hysteresis				30		mV
Overtemperature Protect Threshold				170		°C
Overtemperature Protect Hysteresis				15		°C
Oscillator Frequency	V_{FB} = 0.8V V_{FB} = 0V		500	550 100	650	kHz kHz
$R_{DS(ON)}$ of Internal P-Channel FET	V_{IN} = 4.2V, I_{SW} = 100mA			0.85	1.4	Ω
Peak Current Sense Voltage	(Note 6)			120		mV

Note 1: Absolute Maximum Ratings are those values beyond which the life of a device may be impaired.

Note 2: The LTC1779E is guaranteed to meet performance specifications from 0°C to 70°C. Specifications over the –40°C to 85°C operating temperature range are assured by design, characterization and correlation with statistical process controls.

Note 3: T_J is calculated from the ambient temperature T_A and power dissipation P_D according to the following formula:

$T_J = T_A + (P_D \bullet \theta_J °C/W)$

Note 4: Dynamic supply current is higher due to the gate charge being delivered at the switching frequency.

Note 5: The LTC1779 is tested in a feedback loop that servos V_{FB} to the output of the error amplifier.

Note 6: Peak current sense voltage is reduced dependent upon duty cycle to a percentage of value as given in Figure 2.

TYPICAL PERFORMANCE CHARACTERISTICS

Reference Voltage vs Temperature

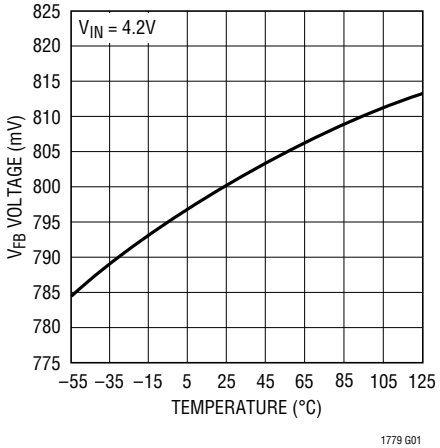

Normalized Oscillator Frequency vs Temperature

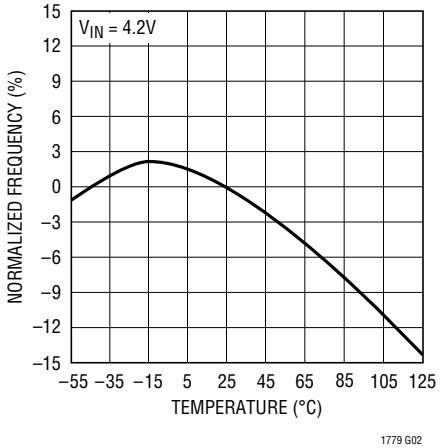

Undervoltage Lockout Trip Voltage vs Temperature

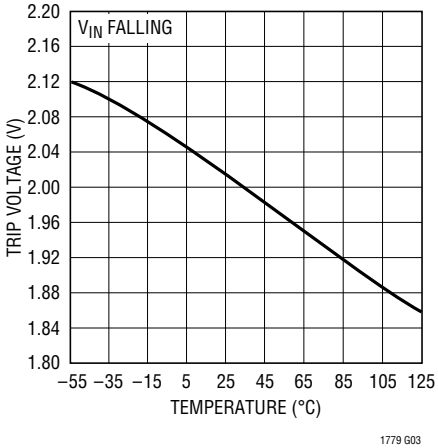

Shutdown Threshold vs Temperature

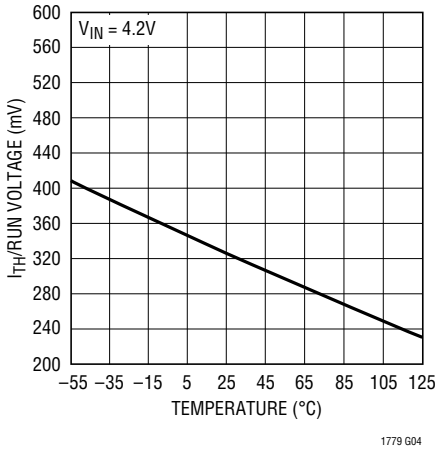

$R_{DS(ON)}$ of Internal P-Channel FET vs Input Voltage

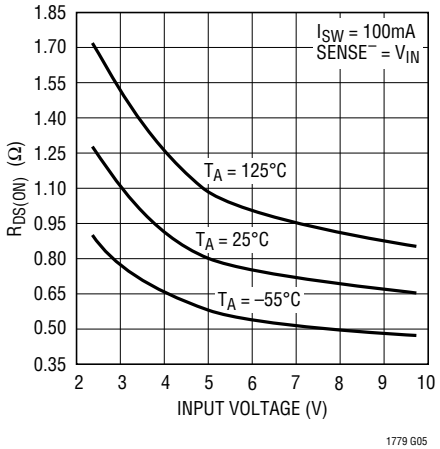

$R_{DS(ON)}$ of Internal P-Channel FET vs Temperature

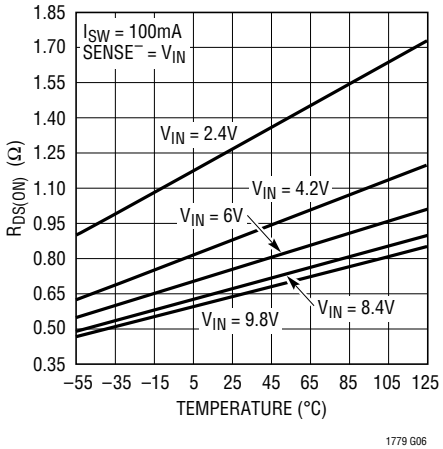

PIN FUNCTIONS

I_{TH}/RUN (Pin 1): This pin performs two functions. It serves as the error amplifier compensation point as well as the run control input. The current comparator threshold increases with this control voltage. Nominal voltage range for this pin is 0.7V to 1.9V. Forcing this pin below 0.325V causes the device to be shut down. In shutdown all functions are disabled and the internal P-channel MOSFET is turned off. The SW pin will be high impedance.

GND (Pin 2): Ground Pin.

V_{FB} (Pin 3): Receives the feedback voltage from an external resistive divider across the output.

SENSE⁻ (Pin 4): The Negative Input to the Current Comparator. Can be connected to V_{IN} for default minimum peak current of 250mA. Connecting a resistor between SENSE⁻ and V_{IN} specifies a lower peak current. (See Applications Information for specifying resistor value.)

V_{IN} (Pin 5): Supply Pin. Must be closely decoupled to GND Pin 2.

SW (Pin 6): Switching Node and Drain of Internal P-Channel Power MOSFET. Connects to external inductor and catch diode.

FUNCTIONAL DIAGRAM

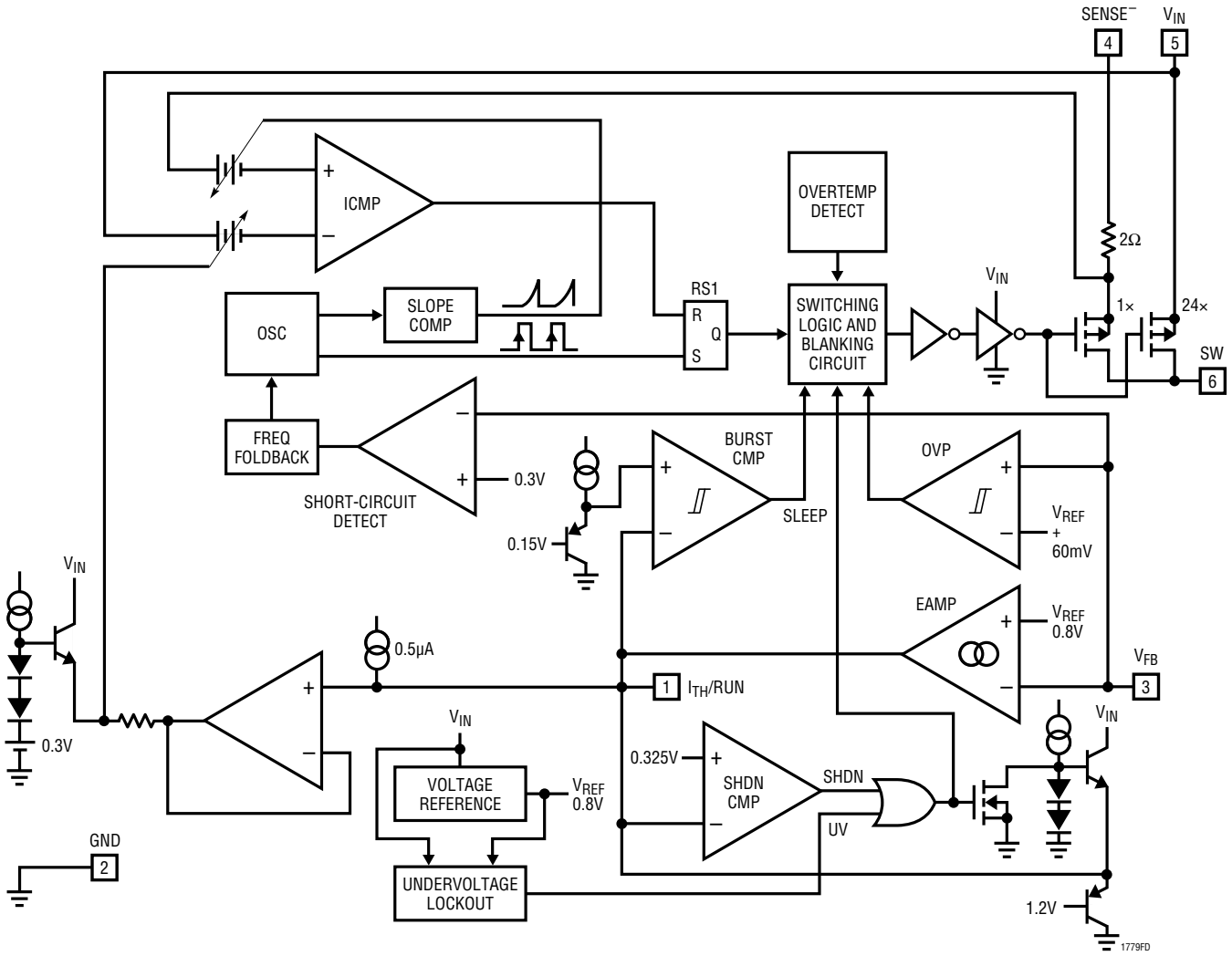

OPERATION (Refer to Functional Diagram)

Main Control Loop

The LTC1779 is a constant frequency current mode switching regulator. During normal operation, the internal P-channel power MOSFET is turned on each cycle when the oscillator sets the RS latch (RS1) and turned off when the current comparator (ICMP) resets the latch. The peak inductor current at which ICMP resets the RS latch is controlled by the voltage on the I_{TH}/RUN pin, which is the output of the error amplifier EAMP. An external resistive divider connected between V_{OUT} and ground allows the EAMP to receive an output feedback voltage V_{FB}. When the load current increases, it causes a slight decrease in V_{FB} relative to the 0.8V reference, which in turn causes the I_{TH}/RUN voltage to increase until the average inductor current matches the new load current.

The main control loop is shut down by pulling the I_{TH}/RUN pin low. Releasing I_{TH}/RUN allows an internal 0.5μA current source to charge up the external compensation network. When the I_{TH}/RUN pin reaches 325mV, the main control loop is enabled with the I_{TH}/RUN voltage then pulled up to its zero current level of approximately 0.7V. As the external compensation network continues to charge up, the corresponding output current trip level follows, allowing normal operation.

OPERATION (Refer to Functional Diagram)

Comparator OVP guards against transient overshoots >7.5% by turning off the internal P-channel power MOSFET and keeping it off until the fault is removed.

Burst Mode Operation

The LTC1779 enters Burst Mode operation at low load currents. In this mode, the peak current of the inductor is set as if V_{ITH}/RUN = 1V (at low duty cycles) even though the voltage at the I_{TH}/RUN pin is at a lower value. If the inductor's average current is greater than the load requirement, the voltage at the I_{TH}/RUN pin will drop. When the I_{TH}/RUN voltage goes below 0.85V, the sleep signal goes high, turning off the internal MOSFET. The sleep signal goes low when the I_{TH}/RUN voltage goes above 0.925V and the LTC1779 resumes normal operation. The next oscillator cycle will turn the internal MOSFET on and the switching cycle repeats.

Dropout Operation

When the input supply voltage decreases towards the output voltage, the rate of change of inductor current during the ON cycle decreases. This reduction means that the internal P-channel MOSFET will remain on for more than one oscillator cycle since the inductor current has not ramped up to the threshold set by EAMP. Further reduction in input supply voltage will eventually cause the P-channel MOSFET to be turned on 100%, i.e., DC. The output voltage will then be determined by the input voltage minus the voltage drop across the MOSFET, the sense resistor and the inductor.

Undervoltage Lockout

To prevent operation of the P-channel MOSFET below safe input voltage levels, an undervoltage lockout is incorporated into the LTC1779. When the input supply voltage drops below approximately 2.0V, the P-channel MOSFET and all circuitry is turned off except the undervoltage block, which draws only several microamperes.

Short-Circuit Protection

When the output is shorted to ground, the frequency of the oscillator will be reduced to about 100kHz. This lower frequency allows the inductor current to safely discharge, thereby preventing current runaway. The oscillator's frequency will gradually increase to its designed rate when the feedback voltage again approaches 0.8V.

Overvoltage Protection

As a further protection, the overvoltage comparator in the LTC1779 will turn the internal MOSFET off when the feedback voltage has risen 7.5% above the reference voltage of 0.8V. This comparator has a typical hysteresis of 30mV.

Slope Compensation and Inductor's Peak Current

The inductor's peak current is determined by:

$$I_{PK} = \frac{M(V_{ITH/RUN} - 0.7)}{10\left(R_{SENSE} + 2\Omega\right)}$$

when the LTC1779 is operating below 40% duty cycle. However, once the duty cycle exceeds 40%, slope compensation begins and effectively reduces the peak inductor current. The amount of reduction is given by the curves in Figure 2.

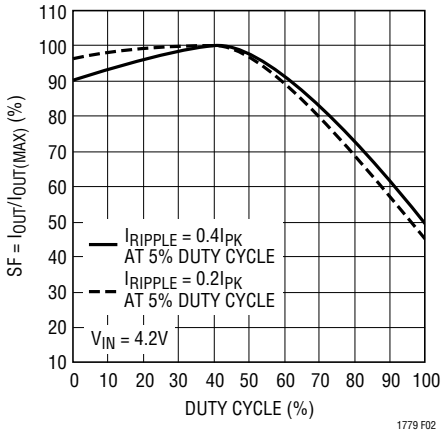

Figure 2. Maximum Output Current vs Duty Cycle

OPERATION (Refer to Functional Diagram)

The variable M is the ratio of the total switch current to that portion of the switch current that flows through R_{SENSE}. M is a function of both R_{SENSE} and R_{OUT} of the internal power switch, which in turn, is a strong function of supply voltage. For values of M refer to Figure 3. In order to guarantee the desired I_{PK} over the full range of supply voltage, the minimum value of M, corresponding to the minimum supply voltage seen in the application, should be chosen. Note that the selection of R_{SENSE}, and hence the resulting M, is an iterative process. For most applications, a value of R_{SENSE} between 0Ω and 20Ω will be chosen.

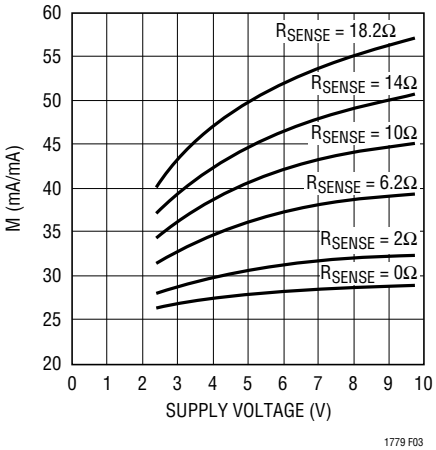

Figure 3. M vs Supply Voltage

APPLICATIONS INFORMATION

The basic LTC1779 application circuit is shown in Figure 1. External component selection is driven by the load requirement and begins with the selection of L1 and R_{SENSE} (= R1). Next, the output diode D1 is selected followed by C_{IN} (= C1)and C_{OUT}(= C2).

Inductor Value Calculation

The inductance value has a direct effect on ripple current. The ripple current, I_{RIPPLE}, decreases with higher inductance or frequency and increases with higher V_{IN}. The inductor's peak-to-peak ripple current is given by:

$$I_{RIPPLE} = \frac{(V_{IN} - V_{OUT})V_{OUT}}{V_{IN} \bullet f \bullet L}$$

where f is the operating frequency fixed at 550kHz in the LTC1779.

A smaller value of L results in higher current ripple and output voltage ripple as well as greater core losses. Larger values of L decrease the ripple, but require finding physically larger inductors since maximum DC current rating decreases significantly as inductance increases within inductor product types. Generally, by choosing the desired ripple current based on the maximum output current, the inductor value can be calculated from the previous equation. It is typical to choose the inductor so that the ripple current is about 40% of the maximum output current at maximum input voltage. Use the following equations to calculate L:

$$I_{RIPPLE} = 0.4 \bullet I_{OUT(MAX)}$$

$$L = \frac{(V_{IN(MAX)} - V_{OUT}) \bullet V_{OUT}}{V_{IN(MAX)} \bullet f \bullet I_{RIPPLE}}$$

$$I_{L(MAX)} = I_{OUT(MAX)} + \frac{I_{RIPPLE}}{2}$$

and then choose an appropriate L and recalculate the ripple current.

In Burst Mode operation on the LTC1779, the ripple current is normally set such that the inductor current is continuous during the burst periods. Therefore, the peak-to-peak ripple current must not exceed:

$$I_{RIPPLE} \le \frac{M(0.030)}{(R_{SENSE} + 2\Omega)}$$

This implies a minimum inductance of:

$$L_{MIN} = \frac{V_{IN} - V_{OUT}}{f\left(\frac{M(0.030)}{(R_{SENSE} + 2\Omega)}\right)}\left(\frac{V_{OUT} + V_D}{V_{IN} + V_D}\right)$$

(Use $V_{IN(MAX)} = V_{IN}$)

APPLICATIONS INFORMATION

A smaller value than L_{MIN} could be used in the circuit; however, the inductor current will not be continuous during burst periods.

R_{SENSE} Selection for Output Current

The selection of R_{SENSE} determines the output current limit, the maximum possible output current before the internal current limit threshold is reached. $I_{OUT(MAX)}$, the maximum specified output current in a design, must be less than I_{CL}. With the current comparator monitoring the voltage developed across R_{SENSE}, the threshold of the comparator determines the inductor's peak current. The maximum output current, I_{CL}, the LTC1779 can provide is given by:

$$I_{CL} = M\left(\frac{SF}{100}\right)\left(\frac{0.12V}{R_{SENSE} + 2\Omega}\right) - \frac{I_{RIPPLE}}{2}$$

where SF and M are as defined in the previous section, Figures 2 and 3. Typically, R_{SENSE} is chosen between 0Ω and 20Ω. Current limit is at a minimum at minimum input voltage and maximum at maximum input voltage. Both conditions should be considered in a design where current limit is important.

To calculate several current limit conditions and choose the best sense resistor for your design, first use minimum input voltage. Calculate the duty cycle at minimum input voltage.

$$DC = \frac{V_{OUT}}{V_{IN(MIN)}}$$

Choose the slope factor, SF, from Figure 2 based on the duty cycle. The ripple current calculated at minimum input voltage and the chosen L should be used in the current limit equation (see Inductor Value Calculation). Figure 3 provides several values of R_{SENSE} and their corresponding M values at different input voltages. Select the minimum input voltage and calculate the resulting minimum current limit settings.

The process must be repeated for maximum current limit using duty cycle, slope factor, ripple current and mirror ratio based on *maximum* input voltage in order to choose the best sense resistor for a particular design and to understand how it is going to work over the entire input voltage range.

Inductor Core Selection

Once the value for L is known, the type of inductor must be selected. High efficiency converters generally cannot afford the core loss found in low cost powdered iron cores, forcing the use of more expensive ferrite, molypermalloy or Kool Mu® cores. Actual core loss is independent of core size for a fixed inductor value, but it is very dependent on inductance selected. As inductance increases, core losses go down. Unfortunately, increased inductance requires more turns of wire and therefore copper losses will increase. Ferrite designs have very low core losses and are preferred at high switching frequencies, so design goals can concentrate on copper loss and preventing saturation. Ferrite core material saturates "hard," which means that inductance collapses abruptly when the peak design current is exceeded. This results in an abrupt increase in inductor ripple current and consequent output voltage ripple. Do not allow the core to saturate!

Molypermalloy (from Magnetics, Inc.) is a very good, low loss core material for toroids, but it is more expensive than ferrite. A reasonable compromise from the same manufacturer is Kool Mu. Toroids are very space efficient, especially when you can use several layers of wire. Because they generally lack a bobbin, mounting is more difficult. However, new designs for surface mount that do not increase the height significantly are available.

Output Diode Selection

The catch diode carries load current during the off-time. The average diode current is therefore dependent on the internal P-channel switch duty cycle. At high input voltages the diode conducts most of the time. As V_{IN} approaches V_{OUT} the diode conducts only a small fraction of the time. The most stressful condition for the diode is when the output is short-circuited. Under this condition the diode must safely handle I_{PK} at close to 100% duty cycle. Therefore, it is important to adequately specify the diode peak current and average power dissipation so as not to exceed the diode ratings.

Kool Mu is a registered trademark of Magnetics, Inc.

APPLICATIONS INFORMATION

Under normal load conditions, the average current conducted by the diode is:

$$I_D = \left(\frac{V_{IN} - V_{OUT}}{V_{IN} + V_D}\right) I_{OUT}$$

The allowable forward voltage drop in the diode is calculated from the maximum short-circuit current as:

$$V_F \approx \frac{P_D}{I_{CL(MAX)}}$$

where P_D is the allowable power dissipation and will be determined by efficiency and/or thermal requirements.

A fast switching diode must also be used to optimize efficiency. Schottky diodes are a good choice for low forward drop and fast switching times. Remember to keep lead length short and observe proper grounding (see Board Layout Checklist) to avoid ringing and increased dissipation.

C_{IN} and C_{OUT} Selection

In continuous mode, the source current of the internal P-channel MOSFET is a square wave of duty cycle $(V_{OUT} + V_D)/(V_{IN} + V_D)$. To prevent large voltage transients, a low ESR input capacitor sized for the maximum RMS current must be used. The maximum RMS capacitor current is given by:

$$C_{IN} \text{ Required } I_{RMS} \approx I_{MAX} \frac{\left[V_{OUT}\left(V_{IN} - V_{OUT}\right)\right]^{1/2}}{V_{IN}}$$

This formula has a maximum at $V_{IN} = 2V_{OUT}$, where $I_{RMS} = I_{OUT}/2$. This simple worst-case condition is commonly used for design because even significant deviations do not offer much relief. Note that capacitor manufacturer's ripple current ratings are often based on 2000 hours of life. This makes it advisable to further derate the capacitor, or to choose a capacitor rated at a higher temperature than required. Several capacitors may be paralleled to meet the size or height requirements in the design. Due to the high operating frequency of the LTC1779, ceramic capacitors can also be used for C_{IN}. Always consult the manufacturer if there is any question.

The selection of C_{OUT} is driven by the required effective series resistance (ESR). Typically, once the ESR requirement is satisfied, the capacitance is adequate for filtering. The output ripple (ΔV_{OUT}) is approximated by:

$$\Delta V_{OUT} \approx I_{RIPPLE}\left(ESR + \frac{1}{8fC_{OUT}}\right)$$

where f is the operating frequency, C_{OUT} is the output capacitance and I_{RIPPLE} is the ripple current in the inductor. The output ripple is highest at maximum input voltage since ΔI_L increases with input voltage.

Manufacturers such as Nichicon, United Chemicon and Sanyo should be considered for high performance through-hole capacitors. The OS-CON semiconductor dielectric capacitor available from Sanyo has the lowest ESR (size) product of any aluminum electrolytic at a somewhat higher price. Once the ESR requirement for C_{OUT} has been met, the RMS current rating generally far exceeds the $I_{RIPPLE(P-P)}$ requirement.

In surface mount applications, multiple capacitors may have to be paralleled to meet the ESR or RMS current handling requirements of the application. Aluminum electrolytic and dry tantalum capacitors are both available in surface mount configurations. In the case of tantalum, it is critical that the capacitors are surge tested for use in switching power supplies. An excellent choice is the AVX TPS, AVX TPSV and KEMET T510 series of surface mount tantalum, available in case heights ranging from 2mm to 4mm. Other capacitor types include Sanyo OS-CON, Nichicon PL series and Panasonic SP.

Low Supply Operation

Although the LTC1779 can function down to approximately 2.0V, the maximum allowable output current is reduced when V_{IN} decreases below 3V. Figure 3 shows the amount of change as the supply is reduced down to 2V. Also shown in Figure 4 is the effect of V_{IN} on V_{REF} as V_{IN} goes below 2.3V.

APPLICATIONS INFORMATION

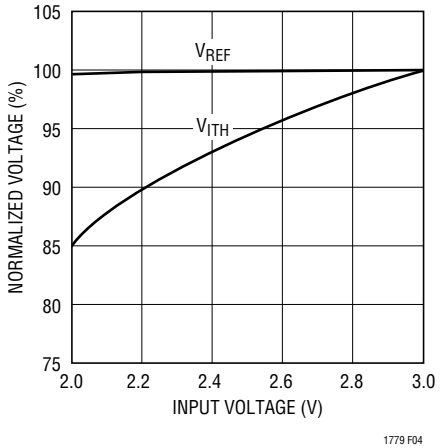

Figure 4. Line Regulation of V_{REF} and V_{ITH}

Setting Output Voltage

The LTC1779 develops a 0.8V reference voltage between the feedback (Pin 3) terminal and ground (see Figure 5). By selecting resistor R1, a constant current is caused to flow through R1 and R2 to set the overall output voltage. The regulated output voltage is determined by:

$$V_{OUT} = 0.8\left(1+\frac{R2}{R1}\right)$$

For most applications, an 80k resistor is suggested for R1. To prevent stray pickup, locate resistors R1 and R2 close to LTC1779.

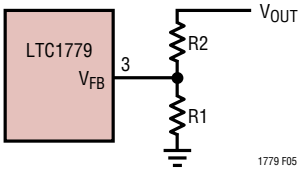

Figure 5. Setting Output Voltage

Efficiency Considerations

The efficiency of a switching regulator is equal to the output power divided by the input power times 100%. It is often useful to analyze individual losses to determine what is limiting the efficiency and which change would produce the most improvement. Efficiency can be expressed as:

$$\text{Efficiency} = 100\% - (\eta 1 + \eta 2 + \eta 3 + ...)$$

where $\eta 1$, $\eta 2$, etc. are the individual losses as a percentage of input power.

Although all dissipative elements in the circuit produce losses, four main sources usually account for most of the losses in LTC1779 circuits: 1) LTC1779 DC bias current, 2) MOSFET gate charge current, 3) I^2R losses and 4) voltage drop of the output diode.

1. The V_{IN} current is the DC supply current, given in the electrical characteristics, that excludes MOSFET driver and control currents. V_{IN} current results in a small loss which increases with V_{IN}.
2. MOSFET gate charge current results from switching the gate capacitance of the internal power MOSFET. Each time the MOSFET gate is switched from low to high to low again, a packet of charge dQ moves from V_{IN} to ground. The resulting dQ/dt is a current out of V_{IN} which is typically much larger than the DC supply current. In continuous mode, $I_{GATECHG} = f(Qp)$.
3. I^2R losses are predicted from the DC resistances of the internal MOSFET, inductor and current shunt. In continuous mode the average output current flows through L but is "chopped" between the internal P-channel MOSFET in series with R_{SENSE} and the output diode. The MOSFET $R_{DS(ON)}$ plus R_{SENSE} multiplied by duty cycle can be summed with the resistances of L and R_{SENSE} to obtain I^2R losses.
4. The output diode is a major source of power loss at high currents and gets worse at high input voltages. The diode loss is calculated by multiplying the forward voltage times the diode duty cycle multiplied by the load current. For example, assuming a duty cycle of 50% with a Schottky diode forward voltage drop of 0.4V, the loss increases from 0.5% to 8% as the load current increases from 0.5A to 2A.
5. Transition losses apply to the internal MOSFET and increase at higher operating frequencies and input voltages. Transition losses can be estimated from:

   $$\text{Transition Loss} = 2(V_{IN})^2 I_{O(MAX)} C_{RSS}(f)$$

Other losses including C_{IN} and C_{OUT} ESR dissipative losses, and inductor core losses, generally account for less than 2% total additional loss.

APPLICATIONS INFORMATION

Foldback Current Limiting

As described in the Output Diode Selection, the worst-case dissipation occurs with a short-circuited output when the diode conducts the current limit value almost continuously. To prevent excessive heating in the diode, foldback current limiting can be added to reduce the current in proportion to the severity of the fault.

Foldback current limiting is implemented by adding diodes D_{FB1} and D_{FB2} between the output and the I_{TH}/RUN pin as shown in Figure 6. In a hard short (V_{OUT} = 0V), the current will be reduced to approximately 50% of the maximum output current.

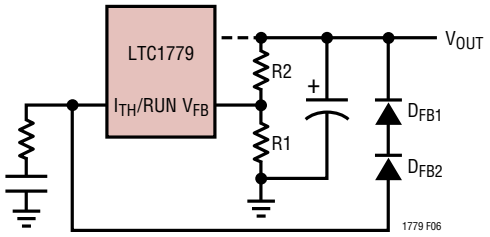

Figure 6. Foldback Current Limiting

PC Board Layout Checklist

When laying out the printed circuit board, the following checklist should be used to ensure proper operation of the LTC1779. These items are illustrated graphically in the layout diagram in Figure 7. Check the following in your layout:

1. Large switch currents flow into the input capacitor C_{IN}, the power switch and the Schottky diode D1. The loop formed by these components should be as small as possible.
2. Is the input decoupling capacitor (0.1µF) connected closely between V_{IN} (Pin 5) and ground (Pin 2)?
3. Keep the switching node SW away from sensitive small signal nodes.
4. Does the V_{FB} pin connect directly to the feedback resistors? The resistive divider R1 and R2 must be connected between the (+) plate of C_{OUT} and signal ground. Locate R1 and R2 close to the V_{FB} pin.

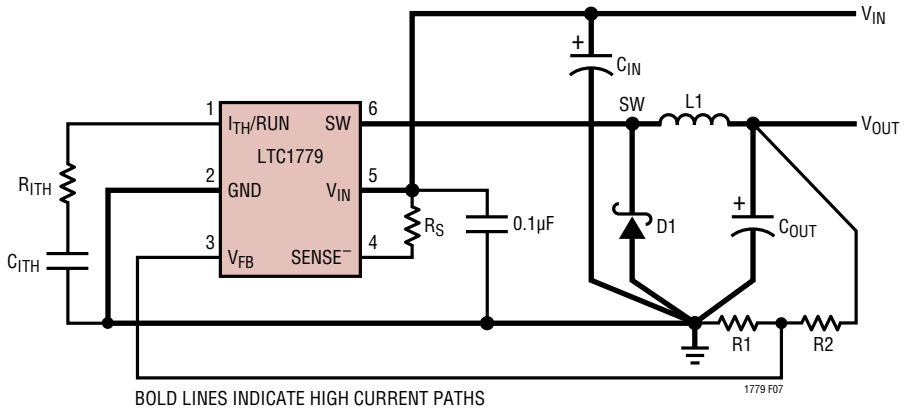

Figure 7. LTC1779 Layout Diagram (See PC Board Layout Checklist)

PACKAGE DESCRIPTION

Please refer to http://www.linear.com/designtools/packaging/ for the most recent package drawings.

S6 Package
6-Lead Plastic TSOT-23
(Reference LTC DWG # 05-08-1636)

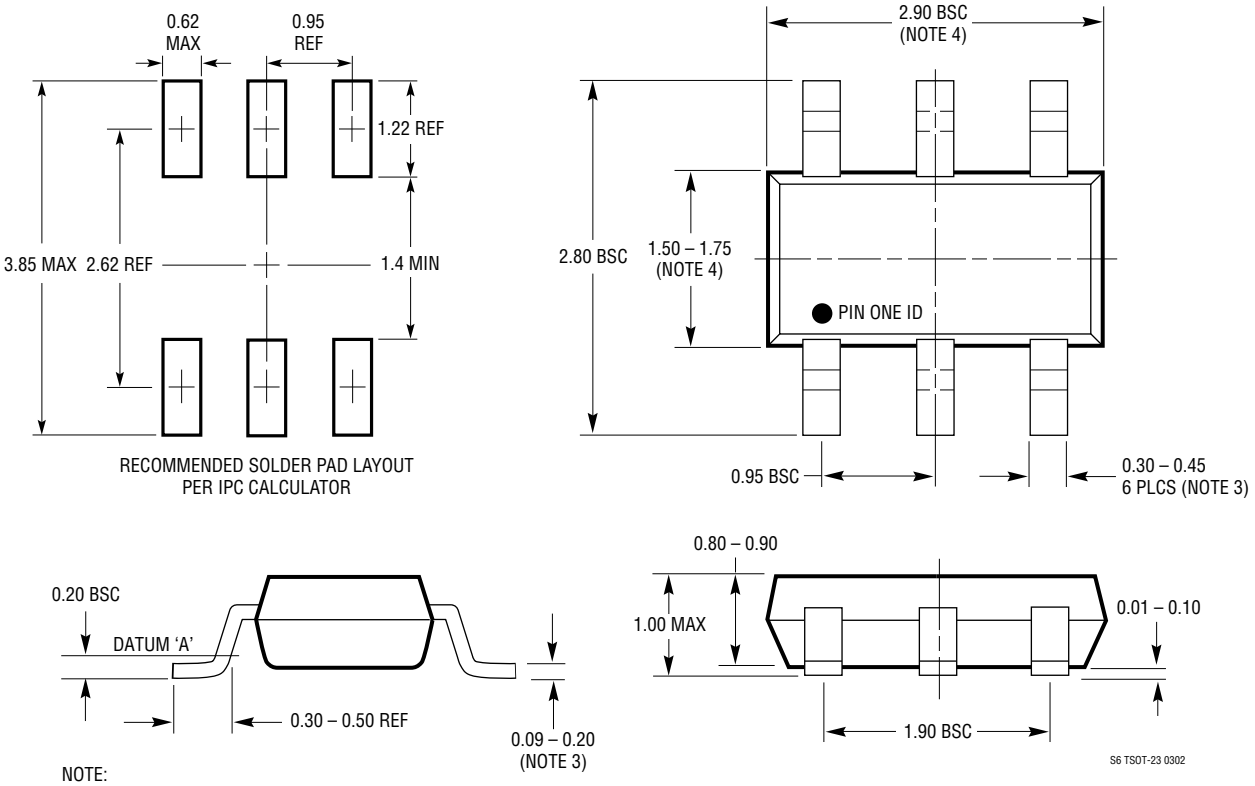

NOTE:
1. DIMENSIONS ARE IN MILLIMETERS
2. DRAWING NOT TO SCALE
3. DIMENSIONS ARE INCLUSIVE OF PLATING
4. DIMENSIONS ARE EXCLUSIVE OF MOLD FLASH AND METAL BURR
5. MOLD FLASH SHALL NOT EXCEED 0.254mm
6. JEDEC PACKAGE REFERENCE IS MO-193

REVISION HISTORY

REV	DATE	DESCRIPTION	PAGE NUMBER
A	09/15	Revised package drawing	12

Information furnished by Linear Technology Corporation is believed to be accurate and reliable. However, no responsibility is assumed for its use. Linear Technology Corporation makes no representation that the interconnection of its circuits as described herein will not infringe on existing patent rights.

TYPICAL APPLICATION

LTC1779 Minimal Component Count, Single Li-Ion to 1.8V/250mA Step-Down Converter

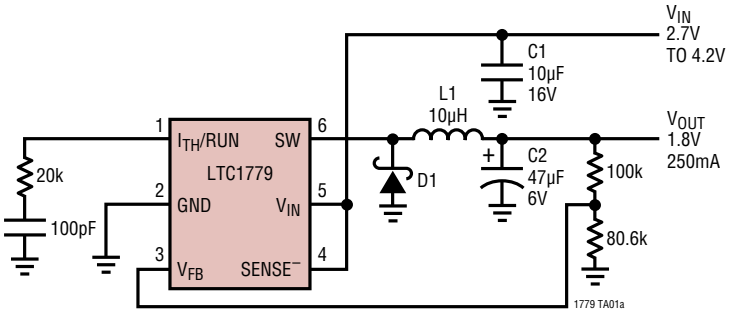

C1: TAIYO YUDEN CERAMIC EMK325BJ106MNT
C2: SANYO POSCAP 6TPA47M
D1: IR10BQ015
L1: COILTRONICS UP1B100

Efficiency vs Load Current

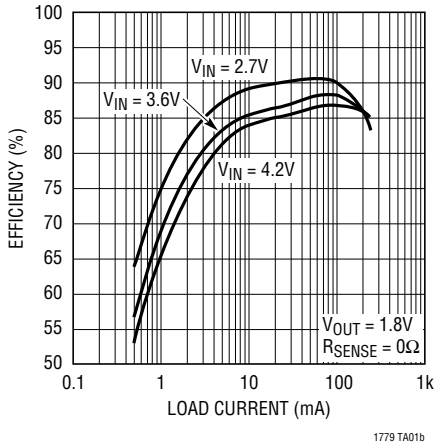

RELATED PARTS

PART NUMBER	DESCRIPTION	COMMENTS
LT®1375/LT1376	1.5A, 500kHz Step-Down Switching Regulators	High Frequency, Small Inductor, High Efficiency
LT1616	600mA Step-Down Switching Regulator	1.4MHz, 4V to 25V Input, ThinSOT Package
LTC1624	High Efficiency SO-8 N-Channel Switching Regulator Controller	8-Pin N-Channel Drive, $3.5V \le V_{IN} \le 36V$
LTC1625	No R_{SENSE}™ Synchronous Step-Down Regulator	High Efficiency, No Sense Resistor
LTC1627	Low Voltage, Monolithic Synchronous Step-Down Regulator	Low Supply Voltage Range: 2.65V to 8V, I_{OUT} = 0.5A
LT1676/LT1776	Wide Input Range Step-Down Switching Regulators	60V Input, 700mA Internal Switches
LTC1735	Single, High Efficiency, Low Noise Synchronous Switching Controller	High Efficiency 5V to 3.3V Conversion at up to 15A
LT1767	1.5A, 1.4MHz Step-Down DC/DC Converter	Higher Current, 8-Lead MSOP Package
LTC1771	Ultralow Supply Current Step-Down DC/DC Controller	10µA I_Q, 93% Efficiency, $1.23V \le V_{OUT} \le 18V$, $2.8V \le V_{IN} \le 20V$
LTC1772	Constant Frequency Current Mode Step-Down DC/DC Controller	V_{IN} = 2.5V to 9.8V, I_{OUT} Up to 2A, ThinSOT Package
LTC1773	95% Efficient Synchronous Step-Down Controller	$2.65V \le V_{IN} \le 8.5V$, $0.8V \le V_{OUT} \le V_{IN}$, Current Mode, 550kHz
LTC1877	High Efficiency Monolithic Step-Down Regulator	550kHz, MS8, V_{IN} Up to 10V, I_Q = 10µA, I_{OUT} to 600mA at V_{IN} = 5V
LTC1878	High Efficiency Monolithic Step-Down Regulator	550kHz, MS8, V_{IN} Up to 6V, I_Q = 10µA, I_{OUT} to 600mA at V_{IN} = 3.3V
LTC3400	1.2MHz Synchronous Step-Up DC/DC Converter in ThinSOT	92% Efficiency, V_{IN} = 0.5V to 6V, V_{OUT} = 2.6V to 5V
LTC3401	Single Cell, High Current (1A), Micropower, Synchronous 3MHz Step-Up DC/DC Converter	V_{IN} = 0.5V to 5V, Up to 97% Efficiency Synchronizable Oscillator from 100kHz to 3MHz
LTC3402	Single Cell, High Current (2A), Micropower, Synchronous 3MHz Step-Up DC/DC Converter	V_{IN} = 0.7V to 5V, Up to 95% Efficiency Synchronizable Oscillator from 100kHz to 3MHz
LTC3404	1.4MHz High Efficiency, Monolithic Synchronous Step-Down Regulator	Up to 95% Efficiency, 100% Duty Cycle, I_Q = 10µA, V_{IN} = 2.65V to 6V

No R_{SENSE} is a trademark of Linear Technology Corporation.

Linear Technology Corporation
1630 McCarthy Blvd., Milpitas, CA 95035-7417
(408) 432-1900 • FAX: (408) 434-0507 • www.linear.com/LTC1779
1779f LT 0915 2K REV A • PRINTED IN USA
© LINEAR TECHNOLOGY CORPORATION 2000

Looking for pricing, stock, or lifecycle information?

Click below to explore more details on WIN SOURCE:

- View LTC1779ES6#TRPBF on WIN SOURCE
- Linear Technology Information

Optimize Your Supply Chain with WIN SOURCE Solutions

- Global Sourcing Solution
- Obsolete Management
- Cost Control Management
- Shortage Management
- Alternative Solution
- Excess Inventory Management