FAIRCHILD™

Is Now Part of

ON Semiconductor®

To learn more about ON Semiconductor, please visit our website at
www.onsemi.com

Please note: As part of the Fairchild Semiconductor integration, some of the Fairchild orderable part numbers will need to change in order to meet ON Semiconductor's system requirements. Since the ON Semiconductor product management systems do not have the ability to manage part nomenclature that utilizes an underscore (_), the underscore (_) in the Fairchild part numbers will be changed to a dash (-). This document may contain device numbers with an underscore (_). Please check the ON Semiconductor website to verify the updated device numbers. The most current and up-to-date ordering information can be found at www.onsemi.com. Please email any questions regarding the system integration to Fairchild_questions@onsemi.com.

ON Semiconductor and the ON Semiconductor logo are trademarks of Semiconductor Components Industries, LLC dba ON Semiconductor or its subsidiaries in the United States and/or other countries. ON Semiconductor owns the rights to a number of patents, trademarks, copyrights, trade secrets, and other intellectual property. A listing of ON Semiconductor's product/patent coverage may be accessed at www.onsemi.com/site/pdf/Patent-Marking.pdf. ON Semiconductor reserves the right to make changes without further notice to any products herein. ON Semiconductor makes no warranty, representation or guarantee regarding the suitability of its products for any particular purpose, nor does ON Semiconductor assume any liability arising out of the application or use of any product or circuit, and specifically disclaims any and all liability, including without limitation special, consequential or incidental damages. Buyer is responsible for its products and applications using ON Semiconductor products, including compliance with all laws, regulations and safety requirements or standards, regardless of any support or applications information provided by ON Semiconductor. "Typical" parameters which may be provided in ON Semiconductor data sheets and/or specifications can and do vary in different applications and actual performance may vary over time. All operating parameters, including "Typicals" must be validated for each customer application by customer's technical experts. ON Semiconductor does not convey any license under its patent rights nor the rights of others. ON Semiconductor products are not designed, intended, or authorized for use as a critical component in life support systems or any FDA Class 3 medical devices or medical devices with a same or similar classification in a foreign jurisdiction or any devices intended for implantation in the human body. Should Buyer purchase or use ON Semiconductor products for any such unintended or unauthorized application, Buyer shall indemnify and hold ON Semiconductor and its officers, employees, subsidiaries, affiliates, and distributors harmless against all claims, costs, damages, and expenses, and reasonable attorney fees arising out of, directly or indirectly, any claim of personal injury or death associated with such unintended or unauthorized use, even if such claim alleges that ON Semiconductor was negligent regarding the design or manufacture of the part. ON Semiconductor is an Equal Opportunity/Affirmative Action Employer. This literature is subject to all applicable copyright laws and is not for resale in any manner.

FAIRCHILD SEMICONDUCTOR®

May 2012

H11F1M, H11F2M, H11F3M Photo FET Optocouplers

Features

As a remote variable resistor:
- ≤ 100Ω to ≥ 300MΩ
- ≤ 15pF shunt capacitance
- ≥ 100GΩ I/O isolation resistance

As an analog switch:
- Extremely low offset voltage
- 60 V_{pk-pk} signal capability
- No charge injection or latch-up
- UL recognized (File #E90700)

Applications

As a remote variable resistor:
- Isolated variable attenuator
- Automatic gain control
- Active filter fine tuning/band switching

As an analog switch:
- Isolated sample and hold circuit
- Multiplexed, optically isolated A/D conversion

General Description

The H11FXM series consists of a Gallium-Aluminum-Arsenide IRED emitting diode coupled to a symmetrical bilateral silicon photo-detector. The detector is electrically isolated from the input and performs like an ideal isolated FET designed for distortion-free control of low level AC and DC analog signals. The H11FXM series devices are mounted in dual in-line packages.

Schematic

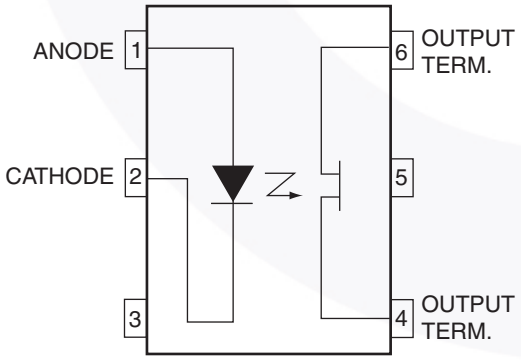

Package Outlines

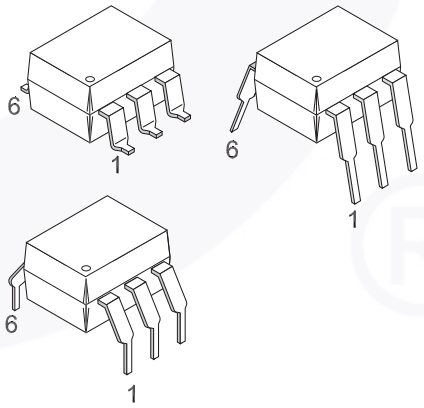

Absolute Maximum Ratings (T_A = 25°C unless otherwise specified)

Stresses exceeding the absolute maximum ratings may damage the device. The device may not function or be operable above the recommended operating conditions and stressing the parts to these levels is not recommended. In addition, extended exposure to stresses above the recommended operating conditions may affect device reliability. The absolute maximum ratings are stress ratings only.

Symbol	Parameter	Device	Value	Units
TOTAL DEVICE				
T_{STG}	Storage Temperature	All	-40 to +150	°C
T_{OPR}	Operating Temperature	All	-40 to +100	°C
T_{SOL}	Lead Solder Temperature	All	260 for 10 sec	°C
EMITTER				
I_F	Continuous Forward Current	All	60	mA
V_R	Reverse Voltage	All	5	V
$I_{F(pk)}$	Forward Current – Peak (10µs pulse, 1% duty cycle)	All	1	A
P_D	LED Power Dissipation 25°C Ambient	All	100	mW
	Derate Linearly from 25°C		1.33	mW/°C
DETECTOR				
P_D	Detector Power Dissipation @ 25°C	All	300	mW
	Derate linearly from 25°C		4.0	mW/°C
BV_{4-6}	Breakdown Voltage (either polarity)	H11F1M, H11F2M	±30	V
		H11F3M	±15	V
I_{4-6}	Continuous Detector Current (either polarity)	All	±100	mA

Electrical Characteristics (T_A = 25°C unless otherwise specified.)

Individual Component Characteristics

Symbol	Parameter	Test Conditions	Device	Min.	Typ.*	Max.	Unit
EMITTER							
V_F	Input Forward Voltage	I_F = 16mA	All		1.3	1.75	V
I_R	Reverse Leakage Current	V_R = 5V	All			10	µA
C_J	Capacitance	V = 0 V, f = 1.0MHz	All		50		pF
OUTPUT DETECTOR							
BV_{4-6}	Breakdown Voltage Either Polarity	I_{4-6} = 10µA, I_F = 0	H11F1M, H11F2M	30			V
			H11F3M	15			
I_{4-6}	Off-State Dark Current	V_{4-6} = 15 V, I_F = 0	All			50	nA
		V_{4-6} = 15 V, I_F = 0, T_A = 100°C	All			50	µA
R_{4-6}	Off-State Resistance	V_{4-6} = 15 V, I_F = 0	All	300			MΩ
C_{4-6}	Capacitance	V_{4-6} = 15 V, I_F = 0, f = 1MHz	All			15	pF

Transfer Characteristics

Symbol	Characteristics	Test Conditions	Device	Min	Typ*	Max	Units
DC CHARACTERISTICS							
R_{4-6}	On-State Resistance	I_F = 16mA, I_{4-6} = 100µA	H11F1M			200	Ω
			H11F2M			330	
			H11F3M			470	
R_{6-4}	On-State Resistance	I_F = 16mA, I_{6-4} = 100µA	H11F1M			200	Ω
			H11F2M			330	
			H11F3M			470	
	Resistance, non-linearity and assymetry	I_F = 16mA, I_{4-6} = 25µA RMS, f = 1kHz	All		2		%
AC CHARACTERISTICS							
t_{on}	Turn-On Time	R_L = 50Ω, I_F = 16mA, V_{4-6} = 5V	All			45	µs
t_{off}	Turn-Off Time	R_L = 50Ω, I_F = 16mA, V_{4-6} = 5V	All			45	µs

Isolation Characteristics

Symbol	Characteristic	Test Conditions	Device	Min.	Typ.*	Max.	Units
V_{ISO}	Isolation Voltage	f = 60Hz, t = 1 sec.	All	7500			V_{AC}PEAK
R_{ISO}	Isolation Resistance	V_{I-O} = 500 VDC	All	10^{11}			Ω
C_{ISO}	Isolation Capacitance	f = 1MHz	All		0.2		pF

*All Typical values at T_A = 25°C

Safety and Insulation Ratings

As per IEC 60747-5-2, this optocoupler is suitable for “safe electrical insulation” only within the safety limit data. Compliance with the safety ratings shall be ensured by means of protective circuits.

Symbol	Parameter	Min.	Typ.	Max.	Unit
	Installation Classifications per DIN VDE 0110/1.89 Table 1				
	For Rated Main Voltage < 150Vrms		I-IV		
	For Rated Main voltage < 300Vrms		I-IV		
	Climatic Classification		55/100/21		
	Pollution Degree (DIN VDE 0110/1.89)		2		
CTI	Comparative Tracking Index	175			
V_{PR}	Input to Output Test Voltage, Method b, V_{IORM} x 1.875 = V_{PR}, 100% Production Test with tm = 1 sec, Partial Discharge < 5pC	1594			V_{peak}
	Input to Output Test Voltage, Method a, V_{IORM} x 1.5 = V_{PR}, Type and Sample Test with tm = 60 sec, Partial Discharge < 5pC	1275			V_{peak}
V_{IORM}	Max. Working Insulation Voltage	850			V_{peak}
V_{IOTM}	Highest Allowable Over Voltage	6000			V_{peak}
	External Creepage	7			mm
	External Clearance	7			mm
	Insulation Thickness	0.5			mm
RIO	Insulation Resistance at Ts, V_{IO} = 500V	10^9			Ω

Typical Performance Curves

Figure 1. Resistance vs. Input Current

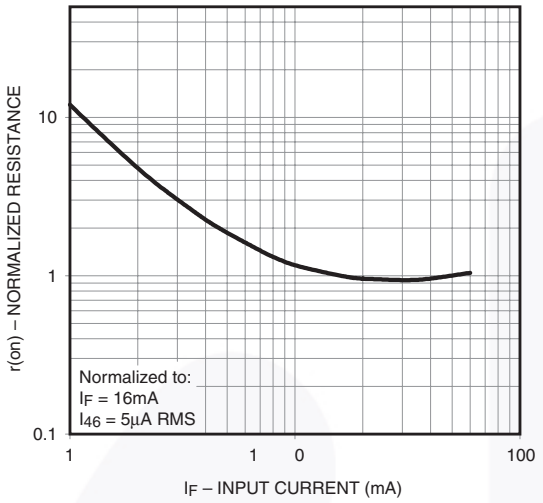

Figure 2. Output Characteristics

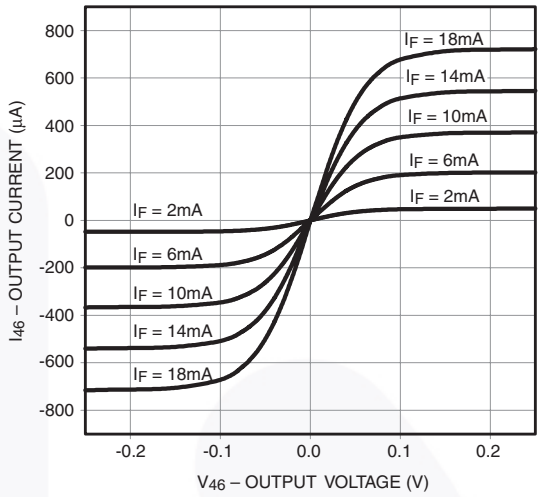

Figure 3. LED Forward Voltage vs. Forward Current

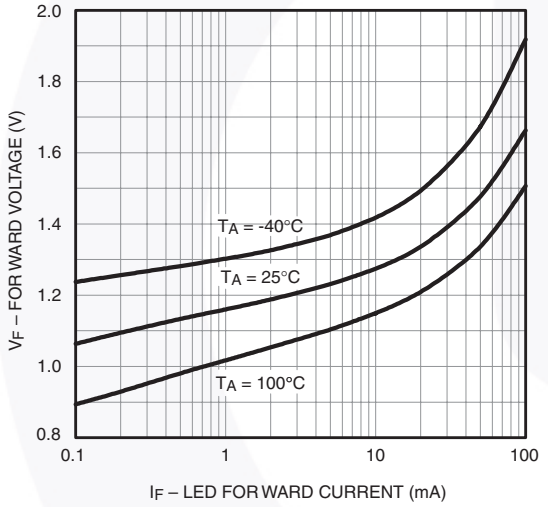

Figure 4. Off-state Current vs. Ambient Temperature

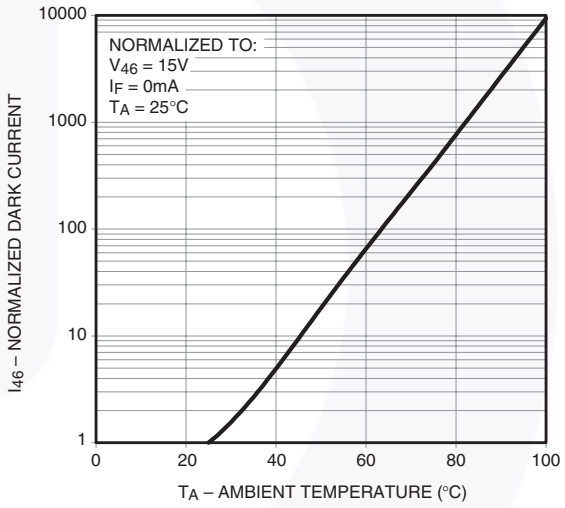

Figure 5. Resistive Non-Linearity vs. D.C. Bias

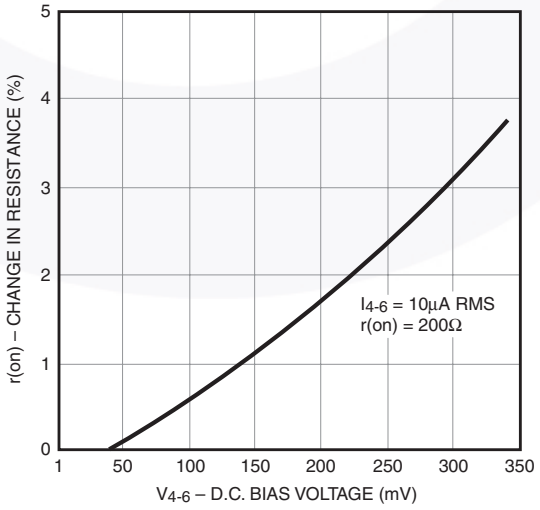

Typical Applications

As a Variable Resistor

ISOLATED VARIABLE ATTENUATORS

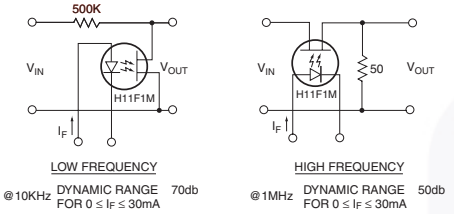

Distortion free attenuation of low level A.C. signals is accomplished by varying the IRED current, I_F Note the wide dynamic range and absence of coupling capacitors; D.C. level shifting or parasitic feedback to the controlling function.

AUTOMATIC GAIN CONTROL

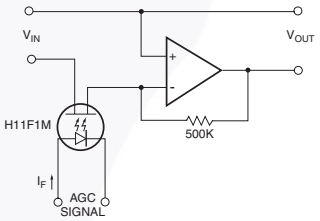

This simple circuit provides over 70db of stable gain control for an AGC signal range of from 0 to 30mA. This basic circuit can be used to provide programmable fade and attack for electronic music.

ACTIVE FILTER FINE TUNING/BAND SWITCHING

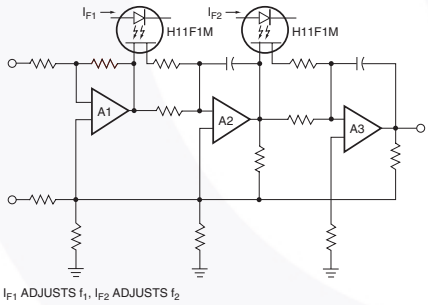

The linearity of resistance and the low offset voltage of the H11FXM allows the remote tuning or band-switching of active filters without switching glitches or distortion. This schematic illustrates the concept, with current to the H11F1M IRED's controlling the filter's transfer characteristic.

As an Analog Signal Switch

ISOLATED SAMPLE AND HOLD CIRCUIT

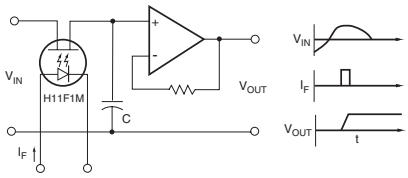

Accuracy and range are improved over conventional FET switches because the H11FXM has no charge injection from the control signal. The H11FXM also provides switching of either polarity input signal up to 30V magnitude.

MULTIPLEXED, OPTICALLY-ISOLATED A/D CONVERSION

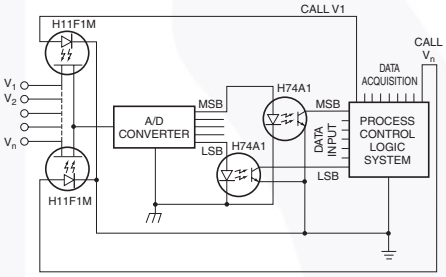

The optical isolation, linearity and low offset voltage of the H11FXM allows the remote multiplexing of low level analog signals from such transducers as thermocouplers, Hall effect devices, strain gauges, etc. to a single A/D converter.

TEST EQUIPMENT - KELVIN CONTACT POLARITY

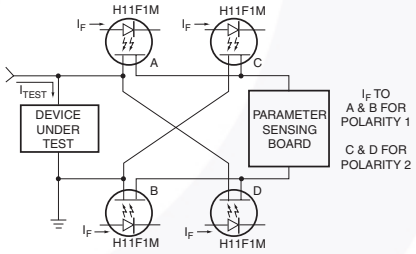

In many test equipment designs the auto polarity function uses reed relay contacts to switch the Kelvin Contact polarity. These reeds are normally one of the highest maintenance cost items due to sticking contacts and mechanical problems. The totally solid-State H11FXM eliminates these troubles while providing faster switching.

Ordering Information

Option	Order Entry Identifier (Example)	Description
No option	H11F1M	Standard Through Hole Device
S	H11F1SM	Surface Mount Lead Bend
SR2	H11F1SR2M	Surface Mount; Tape and Reel
V	H11F1VM	IEC60747-5-2 approval
TV	H11F1TVM	IEC60747-5-2 approval, 0.4" Lead Spacing
SV	H11F1SVM	IEC60747-5-2 approval, Surface Mount
SR2V	H11F1SR2VM	IEC60747-5-2 approval, Surface Mount, Tape and Reel

Marking Information

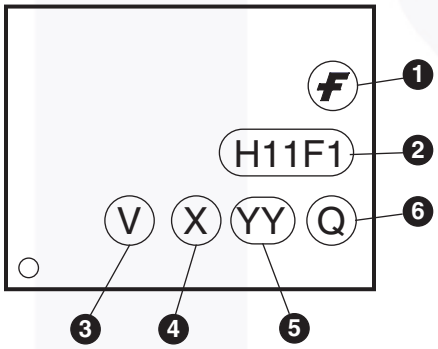

Definitions	
1	Fairchild logo
2	Device number
3	VDE mark (Note: Only appears on parts ordered with VDE option – See order entry table)
4	One digit year code, e.g., ‘7’
5	Two digit work week ranging from ‘01’ to ‘53’
6	Assembly package code

Carrier Tape Specification

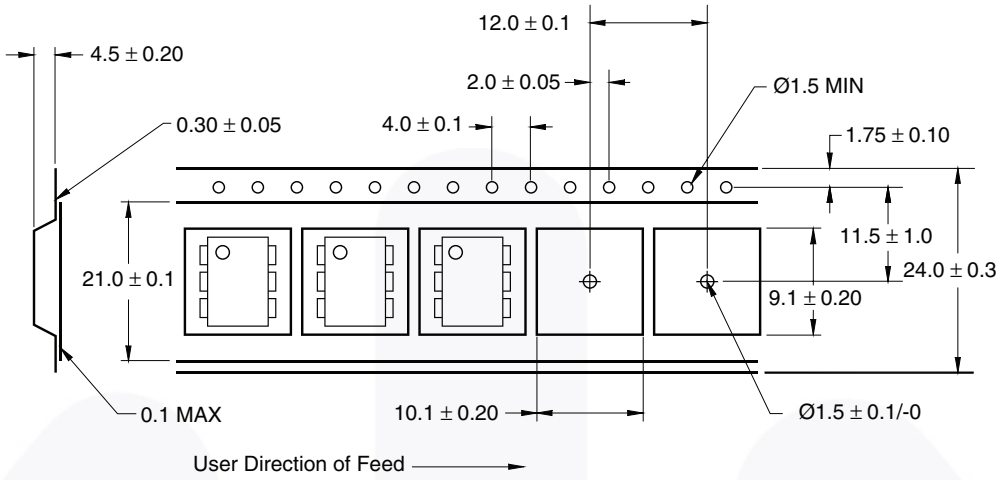

Reflow Profile

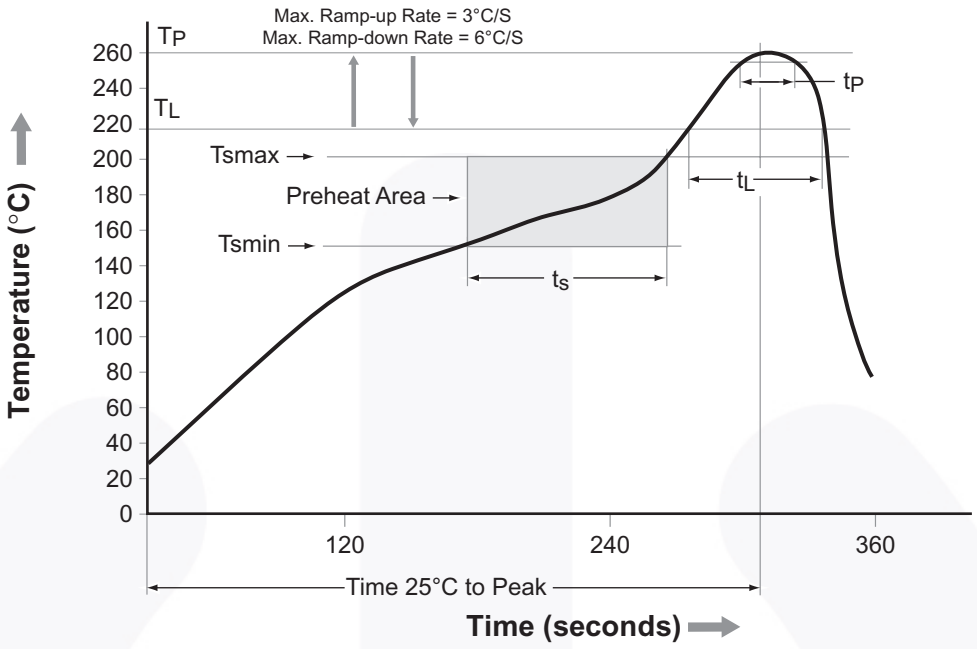

Profile Feature	Pb-Free Assembly Profile
Temperature Min. (Tsmin)	150°C
Temperature Max. (Tsmax)	200°C
Time (t_S) from (Tsmin to Tsmax)	60–120 seconds
Ramp-up Rate (t_L to t_P)	3°C/second max.
Liquidous Temperature (T_L)	217°C
Time (t_L) Maintained Above (T_L)	60–150 seconds
Peak Body Package Temperature	260°C +0°C / –5°C
Time (t_P) within 5°C of 260°C	30 seconds
Ramp-down Rate (T_P to T_L)	6°C/second max.
Time 25°C to Peak Temperature	8 minutes max.

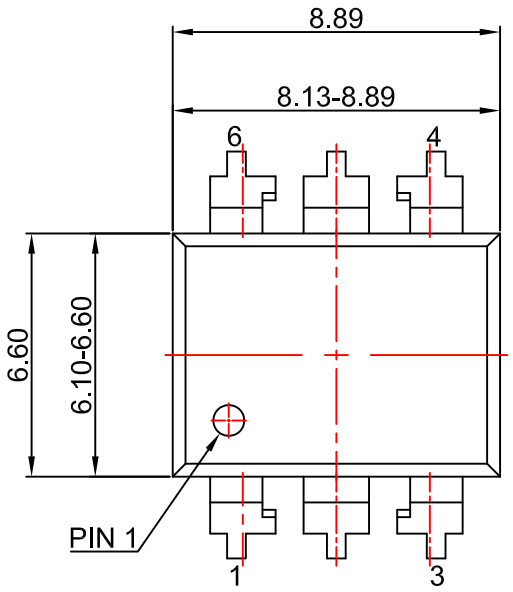

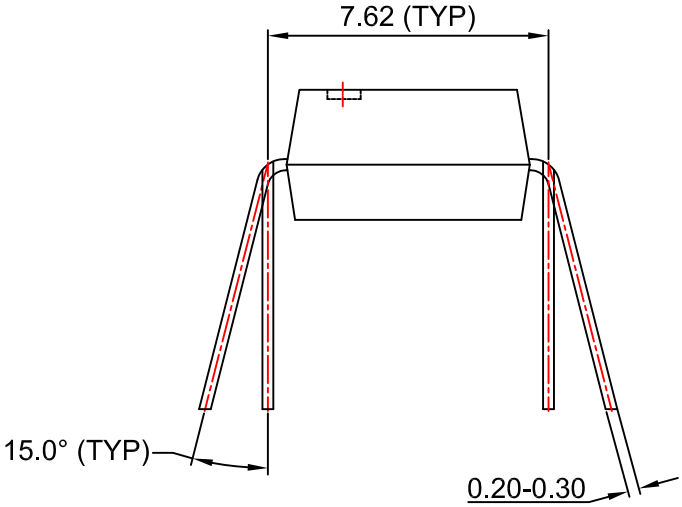

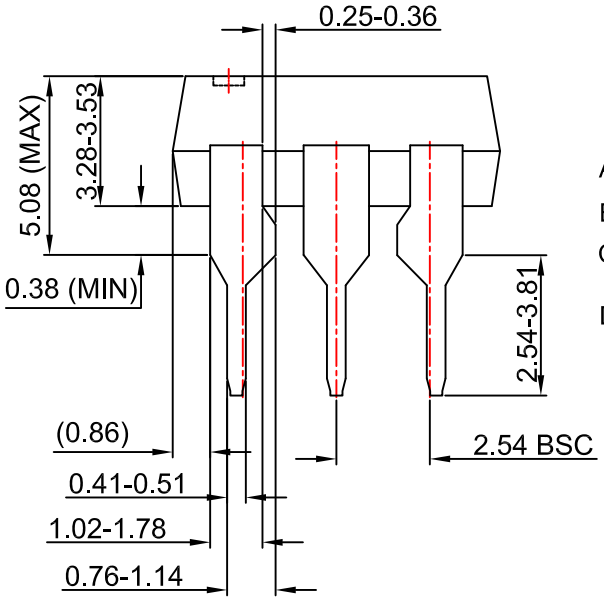

NOTES:

A) NO STANDARD APPLIES TO THIS PACKAGE.

B) ALL DIMENSIONS ARE IN MILLIMETERS.

C) DIMENSIONS ARE EXCLUSIVE OF BURRS, MOLD FLASH, AND TIE BAR EXTRUSION

D) DRAWING FILENAME AND REVSION: MKT-N06BREV4.

FAIRCHILD

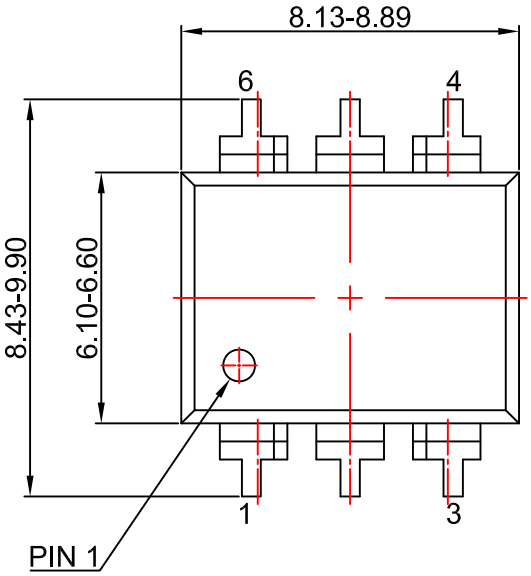

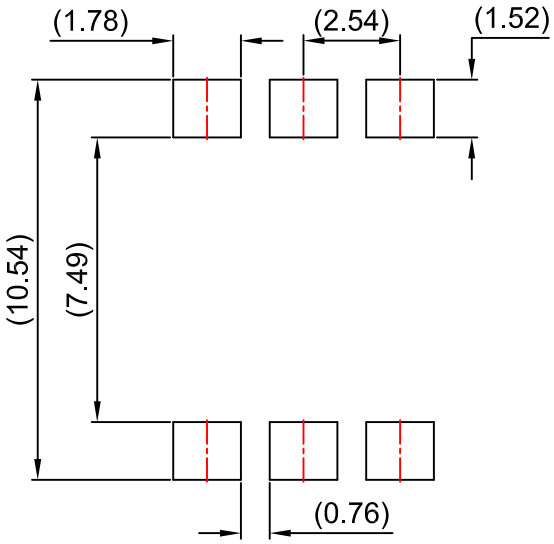

LAND PATTERN RECOMMENDATION

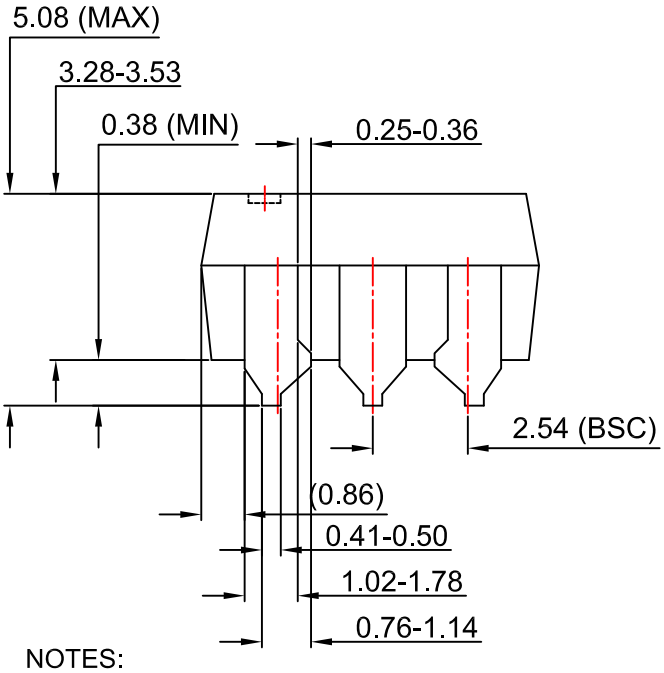

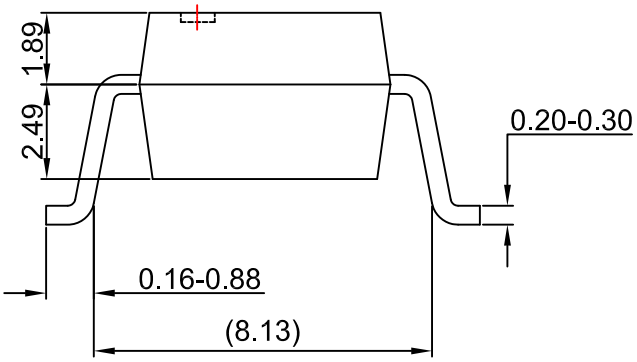

NOTES:

A) NO STANDARD APPLIES TO THIS PACKAGE.

B) ALL DIMENSIONS ARE IN MILLIMETERS.

C) DIMENSIONS ARE EXCLUSIVE OF BURRS,
MOLD FLASH, AND TIE BAR EXTRUSION

D) DRAWING FILENAME AND REVSION : MKT-N06CREV4.

FAIRCHILD

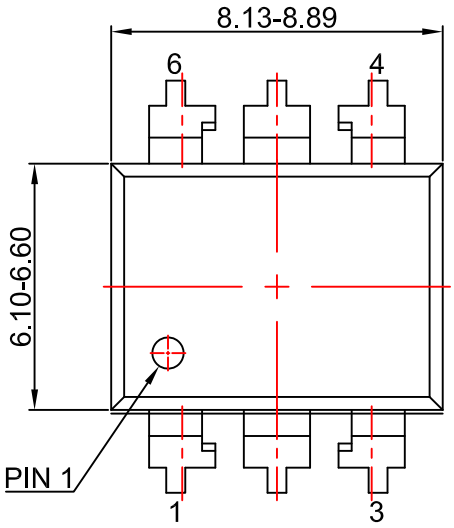

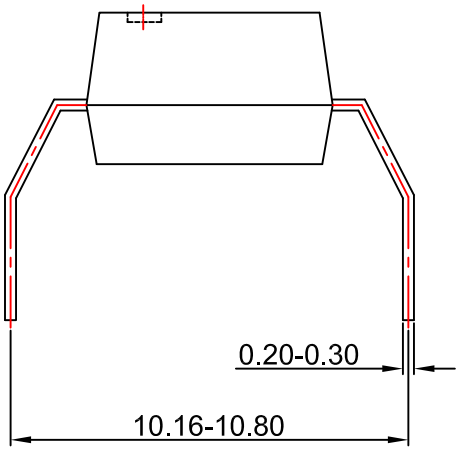

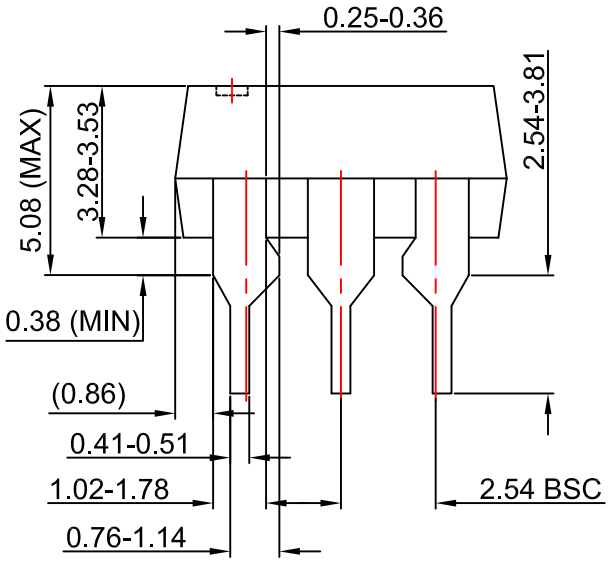

NOTES:

A) NO STANDARD APPLIES TO THIS PACKAGE.

B) ALL DIMENSIONS ARE IN MILLIMETERS.

C) DIMENSIONS ARE EXCLUSIVE OF BURRS, MOLD FLASH, AND TIE BAR EXTRUSION

D) DRAWING FILENAME AND REVSION: MKT-N06Drev4

FAIRCHILD™

ON Semiconductor and ON are trademarks of Semiconductor Components Industries, LLC dba ON Semiconductor or its subsidiaries in the United States and/or other countries. ON Semiconductor owns the rights to a number of patents, trademarks, copyrights, trade secrets, and other intellectual property. A listing of ON Semiconductor's product/patent coverage may be accessed at www.onsemi.com/site/pdf/Patent−Marking.pdf. ON Semiconductor reserves the right to make changes without further notice to any products herein. ON Semiconductor makes no warranty, representation or guarantee regarding the suitability of its products for any particular purpose, nor does ON Semiconductor assume any liability arising out of the application or use of any product or circuit, and specifically disclaims any and all liability, including without limitation special, consequential or incidental damages. Buyer is responsible for its products and applications using ON Semiconductor products, including compliance with all laws, regulations and safety requirements or standards, regardless of any support or applications information provided by ON Semiconductor. "Typical" parameters which may be provided in ON Semiconductor data sheets and/or specifications can and do vary in different applications and actual performance may vary over time. All operating parameters, including "Typicals" must be validated for each customer application by customer's technical experts. ON Semiconductor does not convey any license under its patent rights nor the rights of others. ON Semiconductor products are not designed, intended, or authorized for use as a critical component in life support systems or any FDA Class 3 medical devices or medical devices with a same or similar classification in a foreign jurisdiction or any devices intended for implantation in the human body. Should Buyer purchase or use ON Semiconductor products for any such unintended or unauthorized application, Buyer shall indemnify and hold ON Semiconductor and its officers, employees, subsidiaries, affiliates, and distributors harmless against all claims, costs, damages, and expenses, and reasonable attorney fees arising out of, directly or indirectly, any claim of personal injury or death associated with such unintended or unauthorized use, even if such claim alleges that ON Semiconductor was negligent regarding the design or manufacture of the part. ON Semiconductor is an Equal Opportunity/Affirmative Action Employer. This literature is subject to all applicable copyright laws and is not for resale in any manner.

PUBLICATION ORDERING INFORMATION

LITERATURE FULFILLMENT:
Literature Distribution Center for ON Semiconductor
19521 E. 32nd Pkwy, Aurora, Colorado 80011 USA
Phone: 303−675−2175 or 800−344−3860 Toll Free USA/Canada
Fax: 303−675−2176 or 800−344−3867 Toll Free USA/Canada
Email: orderlit@onsemi.com

N. American Technical Support: 800−282−9855 Toll Free USA/Canada
Europe, Middle East and Africa Technical Support:
Phone: 421 33 790 2910
Japan Customer Focus Center
Phone: 81−3−5817−1050

ON Semiconductor Website: **www.onsemi.com**

Order Literature: http://www.onsemi.com/orderlit

For additional information, please contact your local Sales Representative

Looking for pricing, stock, or lifecycle information?

Click below to explore more details on WIN SOURCE:

- View H11F3M on WIN SOURCE
- Fairchild/ON Semiconductor Information

Optimize Your Supply Chain with WIN SOURCE Solutions

- Global Sourcing Solution
- Obsolete Management
- Cost Control Management
- Shortage Management
- Alternative Solution
- Excess Inventory Management