THE DATASHEET OF

E-UC3843BN

www.win-source.net 0086-755-83957316

UC2842B/3B/4B/5B
UC3842B/3B/4B/5B

HIGH PERFORMANCE CURRENT MODE PWM CONTROLLER

- TRIMMED OSCILLATOR FOR PRECISE FREQUENCY CONTROL
- OSCILLATOR FREQUENCY GUARANTEED AT 250kHz
- CURRENT MODE OPERATION TO 500kHz
- AUTOMATIC FEED FORWARD COMPENSATION
- LATCHING PWM FOR CYCLE-BY-CYCLE CURRENT LIMITING
- INTERNALLY TRIMMED REFERENCE WITH UNDERVOLTAGE LOCKOUT
- HIGH CURRENT TOTEM POLE OUTPUT
- UNDERVOLTAGE LOCKOUT WITH HYSTERESIS
- LOW START-UP AND OPERATING CURRENT

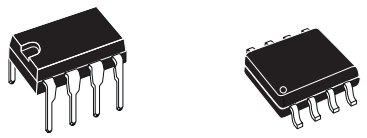

Minidip **SO8**

DESCRIPTION

The UC384xB family of control ICs provides the necessary features to implement off-line or DC to DC fixed frequency current mode control schemes with a minimal external parts count. Internally implemented circuits include a trimmed oscillator for precise DUTY CYCLE CONTROL under voltage lockout featuring start-up current less than 0.5mA, a precision reference trimmed for accuracy at the error amp input, logic to insure latched operation, a PWM comparator which also provides current limit control, and a totem pole output stage designed to source or sink high peak current. The output stage, suitable for driving N-Channel MOSFETs, is low in the off-state.

Differences between members of this family are the under-voltage lockout thresholds and maximum duty cycle ranges. The UC3842B and UC3844B have UVLO thresholds of 16V (on) and 10V (off), ideally suited off-line applications The corresponding thresholds for the UC3843B and UC3845B are 8.5 V and 7.9 V. The UC3842B and UC3843B can operate to duty cycles approaching 100%. A range of the zero to < 50 % is obtained by the UC3844B and UC3845B by the addition of an internal toggle flip flop which blanks the output off every other clock cycle.

BLOCK DIAGRAM (toggle flip flop used only in UC3844B and UC3845B)

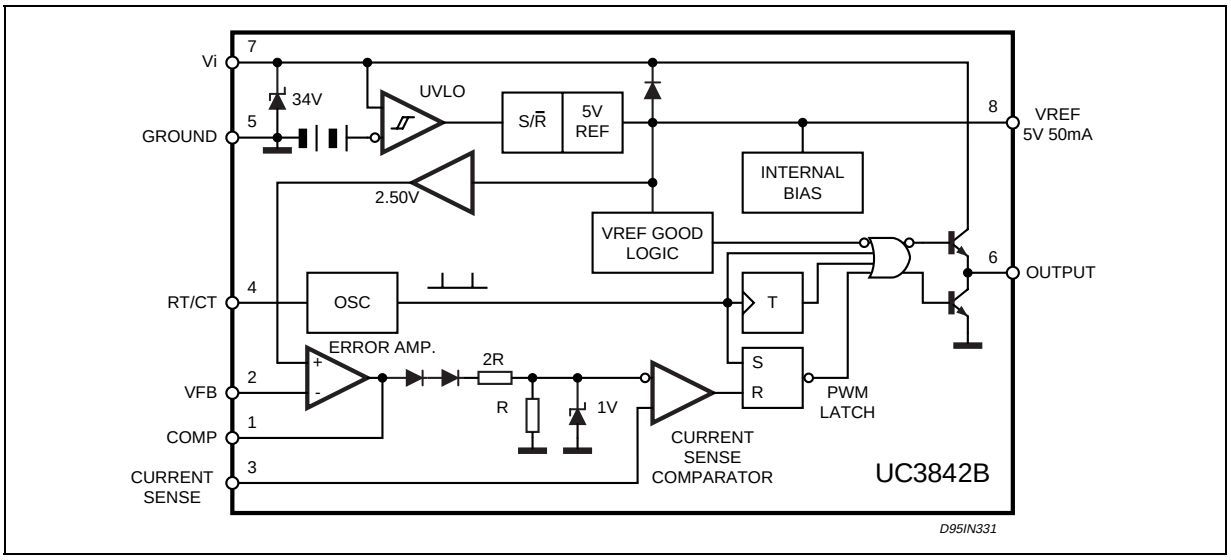

ABSOLUTE MAXIMUM RATINGS

Symbol	Parameter	Value	Unit
V_i	Supply Voltage (low impedance source)	30	V
V_i	Supply Voltage (Ii < 30mA)	Self Limiting	
I_O	Output Current	±1	A
E_O	Output Energy (capacitive load)	5	µJ
	Analog Inputs (pins 2, 3)	– 0.3 to 5.5	V
	Error Amplifier Output Sink Current	10	mA
P_{tot}	Power Dissipation at $T_{amb} \leq 25$ °C (Minidip)	1.25	W
P_{tot}	Power Dissipation at Tamb ≤ 25 °C (SO8)	800	mW
T_{stg}	Storage Temperature Range	– 65 to 150	°C
T_J	Junction Operating Temperature	– 40 to 150	°C
T_L	Lead Temperature (soldering 10s)	300	°C

* All voltages are with respect to pin 5, all currents are positive into the specified terminal.

PIN CONNECTION (top view)

Minidip/SO8

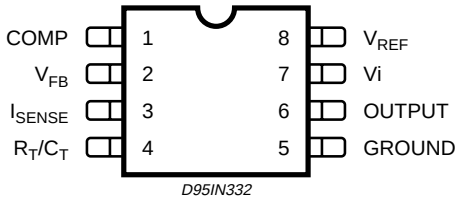

PIN FUNCTIONS

No	Function	Description
1	COMP	This pin is the Error Amplifier output and is made available for loop compensation.
2	V_{FB}	This is the inverting input of the Error Amplifier. It is normally connected to the switching power supply output through a resistor divider.
3	I_{SENSE}	A voltage proportional to inductor current is connected to this input. The PWM uses this information to terminate the output switch conduction.
4	R_T/C_T	The oscillator frequency and maximum Output duty cycle are programmed by connecting resistor R_T to Vref and cpacitor C_T to ground. Operation to 500kHz is possible.
5	GROUND	This pin is the combined control circuitry and power ground.
6	OUTPUT	This output directly drives the gate of a power MOSFET. Peak currents up to 1A are sourced and sunk by this pin.
7	V_{CC}	This pin is the positive supply of the control IC.
8	V_{ref}	This is the reference output. It provides charging current for capacitor C_T through resistor R_T.

ORDERING NUMBERS

SO8	Minidip
UC2842BD1; UC3842BD1 UC2843BD1; UC3843BD1 UC2844BD1; UC3844BD1 UC2845BD1; UC3845BD1	UC2842BN; UC3842BN UC2843BN; UC3843BN UC2844BN; UC3844BN UC2845BN; UC3845BN

THERMAL DATA

Symbol	Description	Minidip	SO8	Unit
$R_{th\ j\text{-}amb}$	Thermal Resistance Junction-ambient. max.	100	150	°C/W

ELECTRICAL CHARACTERISTICS ([note 1] Unless otherwise stated, these specifications apply for $-25 \le T_{amb} \le 85°C$ for UC284XB; $0 \le T_{amb} \le 70°C$ for UC384XB; $V_i = 15V$ (note 5); $R_T = 10K$; $C_T = 3.3nF$)

Symbol	Parameter	Test Conditions	UC284XB			UC384XB			Unit
			Min.	Typ.	Max.	Min.	Typ.	Max.	
REFERENCE SECTION									
V_{REF}	Output Voltage	$T_j = 25°C$ $I_o = 1mA$	4.95	5.00	5.05	4.90	5.00	5.10	V
ΔV_{REF}	Line Regulation	$12V \le V_i \le 25V$		2	20		2	20	mV
ΔV_{REF}	Load Regulation	$1 \le I_o \le 20mA$		3	25		3	25	mV
$\Delta V_{REF}/\Delta T$	Temperature Stability	(Note 2)		0.2			0.2		mV/°C
	Total Output Variation	Line, Load, Temperature	4.9		5.1	4.82		5.18	V
e_N	Output Noise Voltage	$10Hz \le f \le 10KHz$ $T_j = 25°C$ (note 2)		50			50		µV
	Long Term Stability	$T_{amb} = 125°C$, 1000Hrs (note 2)		5	25		5	25	mV
I_{SC}	Output Short Circuit		-30	-100	-180	-30	-100	-180	mA
OSCILLATOR SECTION									
f_{OSC}	Frequency	$T_j = 25°C$ $T_A = T_{low}$ to T_{high} $T_J = 25°C$ ($R_T = 6.2k$, $C_T = 1nF$)	49 48 225	52 – 250	55 56 275	49 48 225	52 – 250	55 56 275	KHz KHz KHz
$\Delta f_{OSC}/\Delta V$	Frequency Change with Volt.	$V_{CC} = 12V$ to 25V	–	0.2	1	–	0.2	1	%
$\Delta f_{OSC}/\Delta T$	Frequency Change with Temp.	$T_A = T_{low}$ to T_{high}	–	1	–	–	0.5	–	%
V_{OSC}	Oscillator Voltage Swing	(peak to peak)	–	1.6	–	–	1.6	–	V
I_{dischg}	Discharge Current (V_{OSC} =2V)	$T_J = 25°C$ $T_A = T_{low}$ to T_{high}	7.8 7.5	8.3 –	8.8 8.8	7.8 7.6	8.3 –	8.8 8.8	mA mA
ERROR AMP SECTION									
V_2	Input Voltage	$V_{PIN1} = 2.5V$	2.45	2.50	2.55	2.42	2.50	2.58	V
I_b	Input Bias Current	$V_{FB} = 5V$		-0.1	-1		-0.1	-2	µA
	A_{VOL}	$2V \le V_o \le 4V$	65	90		65	90		dB
BW	Unity Gain Bandwidth	$T_J = 25°C$	0.7	1		0.7	1		MHz
PSRR	Power Supply Rejec. Ratio	$12V \le V_i \le 25V$	60	70		60	70		dB
I_o	Output Sink Current	$V_{PIN2} = 2.7V$ $V_{PIN1} = 1.1V$	2	12		2	12		mA
I_o	Output Source Current	$V_{PIN2} = 2.3V$ $V_{PIN1} = 5V$	-0.5	-1		-0.5	-1		mA
	V_{OUT} High	$V_{PIN2} = 2.3V$; $R_L = 15K\Omega$ to Ground	5	6.2		5	6.2		V
	V_{OUT} Low	$V_{PIN2} = 2.7V$; $R_L = 15K\Omega$ to Pin 8		0.8	1.1		0.8	1.1	V
CURRENT SENSE SECTION									
G_V	Gain	(note 3 & 4)	2.85	3	3.15	2.85	3	3.15	V/V
V_3	Maximum Input Signal	$V_{PIN1} = 5V$ (note 3)	0.9	1	1.1	0.9	1	1.1	V
SVR	Supply Voltage Rejection	$12 \le V_i \le 25V$ (note 3)		70			70		dB
I_b	Input Bias Current			-2	-10		-2	-10	µA
	Delay to Output			150	300		150	300	ns

ELECTRICAL CHARACTERISTICS (continued)

Symbol	Parameter	Test Conditions	UC284XB			UC384XB			Unit
			Min.	Typ.	Max.	Min.	Typ.	Max.	
OUTPUT SECTION									
V_{OL}	Output Low Level	I_{SINK} = 20mA		0.1	0.4		0.1	0.4	V
		I_{SINK} = 200mA		1.6	2.2		1.6	2.2	V
V_{OH}	Output High Level	I_{SOURCE} = 20mA	13	13.5		13	13.5		V
		I_{SOURCE} = 200mA	12	13.5		12	13.5		V
V_{OLS}	UVLO Saturation	VCC = 6V; I_{SINK} = 1mA		0.1	1.1		0.1	1.1	V
t_r	Rise Time	T_j = 25°C C_L = 1nF (2)		50	150		50	150	ns
t_f	Fall Time	T_j = 25°C C_L = 1nF (2)		50	150		50	150	ns
UNDER-VOLTAGE LOCKOUT SECTION									
	Start Threshold	X842B/4B	15	16	17	14.5	16	17.5	V
		X843B/5B	7.8	8.4	9.0	7.8	8.4	9.0	V
	Min Operating Voltage After Turn-on	X842B/4B	9	10	11	8.5	10	11.5	V
		X843B/5B	7.0	7.6	8.2	7.0	7.6	8.2	V
PWM SECTION									
	Maximum Duty Cycle	X842B/3B	94	96	100	94	96	100	%
		X844B/5B	47	48	50	47	48	50	%
	Minimum Duty Cycle				0			0	%
TOTAL STANDBY CURRENT									
I_{st}	Start-up Current	V_i = 6.5V for UCX843B/45B		0.3	0.5		0.3	0.5	mA
		V_i = 14V for UCX842B/44B		0.3	0.5		0.3	0.5	mA
I_i	Operating Supply Current	V_{PIN2} = V_{PIN3} = 0V		12	17		12	17	mA
V_{iz}	Zener Voltage	I_i = 25mA	30	36		30	36		V

Notes :
1. Max package power dissipation limits must be respected; low duty cycle pulse techniques are used during test maintain T_j as close to T_{amb} as possible.
2. These parameters, although guaranteed, are not 100% tested in production.
3. Parameter measured at trip point of latch with V_{PIN2} = 0.
4. Gain defined as :

   $A = \frac{\Delta V_{PIN1}}{\Delta V_{PIN3}}$; $0 \leq V_{PIN3} \leq 0.8$ V
5. Adjust V_i above the start threshold before setting at 15 V.

Figure 1: Open Loop Test Circuit.

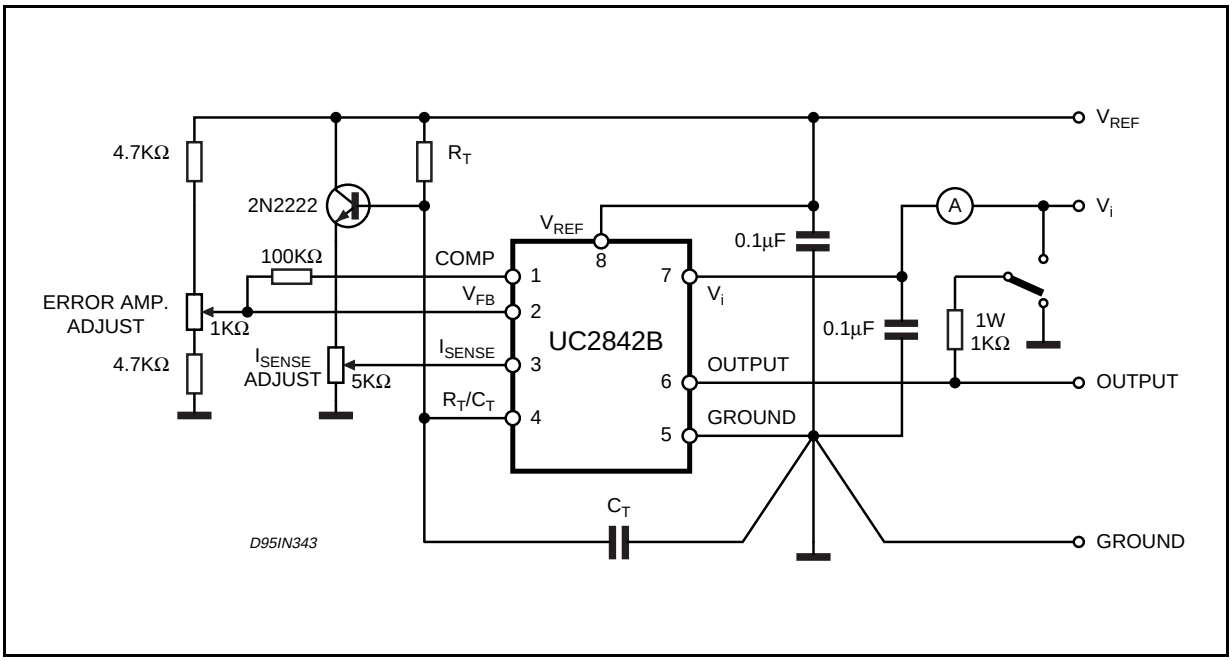

High peak currents associated with capacitive loads necessitate careful grounding techniques. Timing and bypass capacitors should be connected close to pin 5 in a single point ground. The transistor and 5 KΩ potentiometer are used to sample the oscillator waveform and apply an adjustable ramp to pin 3.

Figure 2: Timing Resistor vs. Oscillator Frequency

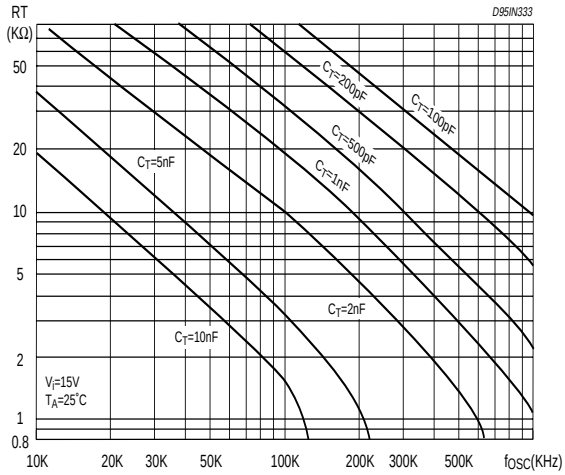

Figure 3: Output Dead-Time vs. Oscillator Frequency

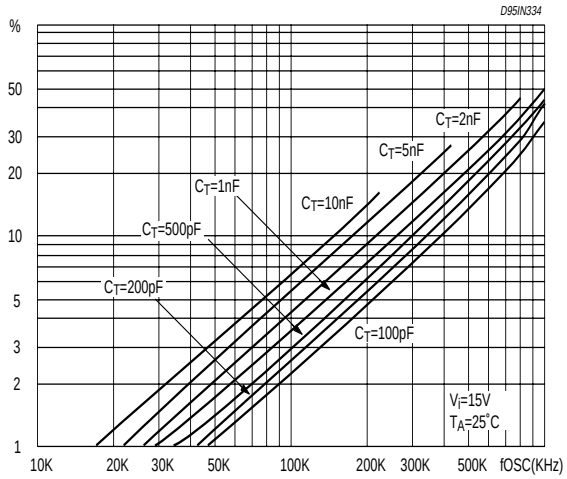

Figure 4: Oscillator Discharge Current vs. Temperature.

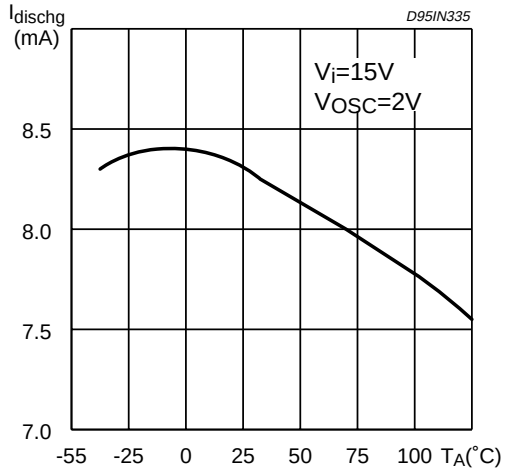

Figure 5: Maximum Output Duty Cycle vs. Timing Resistor.

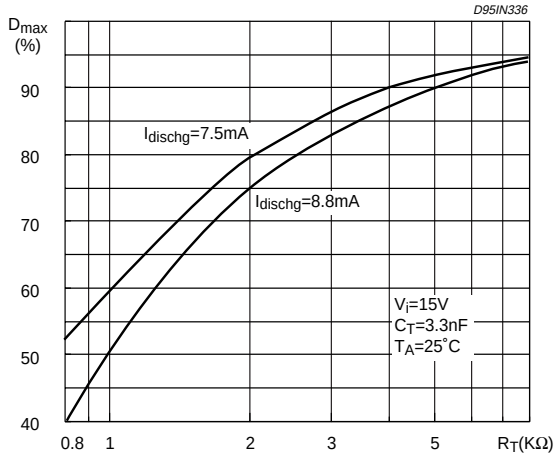

Figure 6: Error Amp Open-Loop Gain and Phase vs. Frequency.

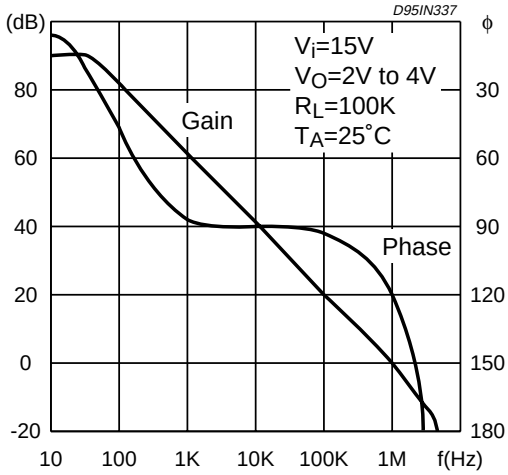

Figure 7: Current Sense Input Threshold vs. Error Amp Output Voltage.

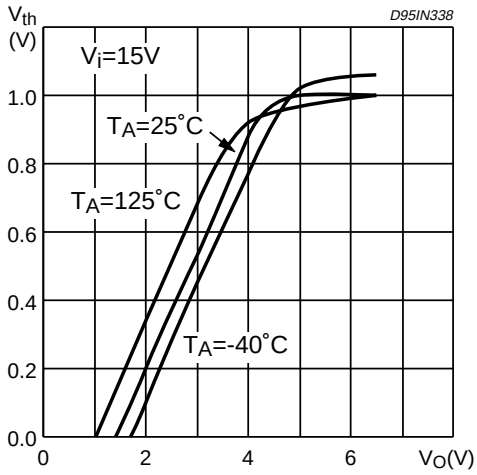

Figure 8: Reference Voltage Change vs. Source Current.

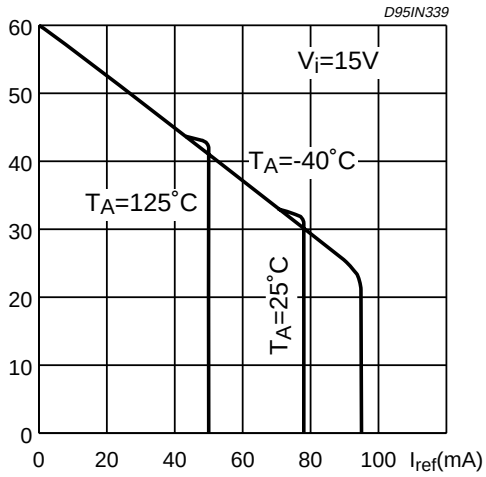

Figure 9: Reference Short Circuit Current vs. Temperature.

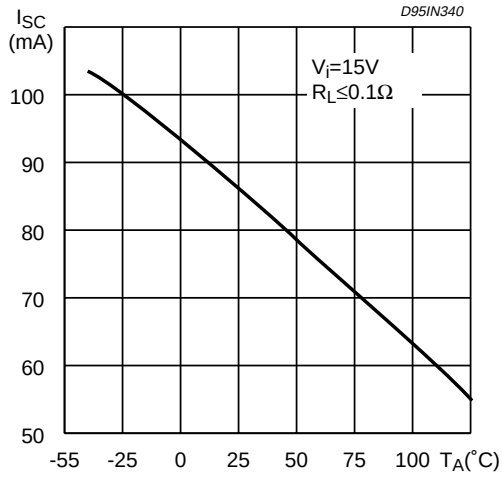

Figure 10: Output Saturation Voltagevs. Load Current.

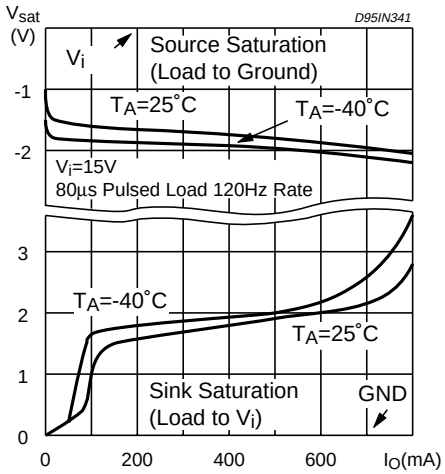

Figure 11: Supply Current vs. Supply Voltage.

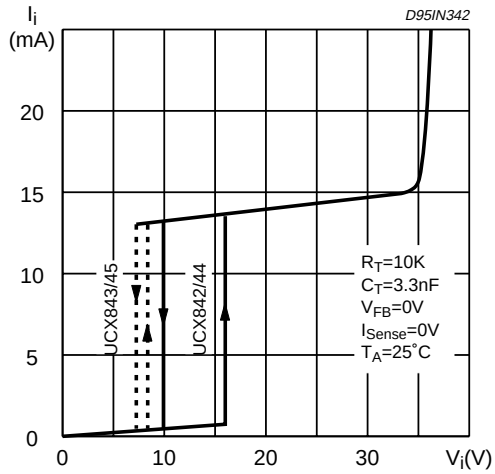

Figure 12: Output Waveform.

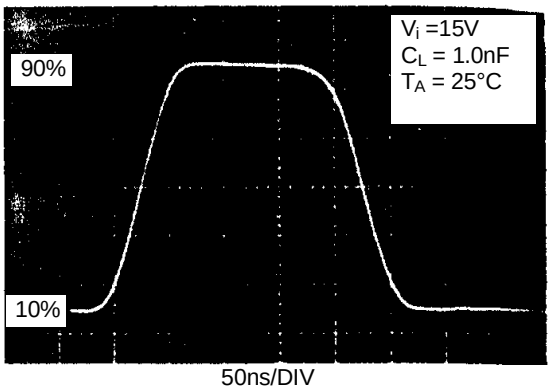

Figure 13: Output Cross Conduction

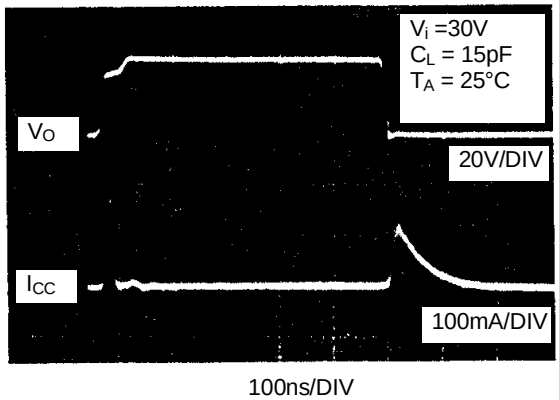

Figure 14: Oscillator and Output Waveforms.

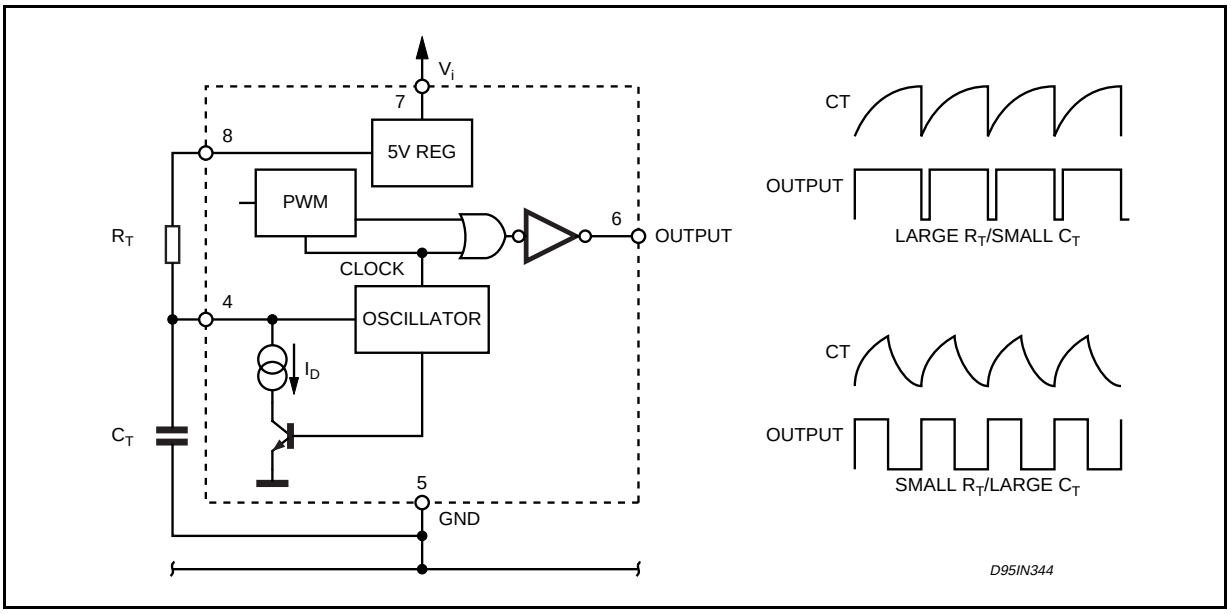

Figure 15 : Error Amp Configuration.

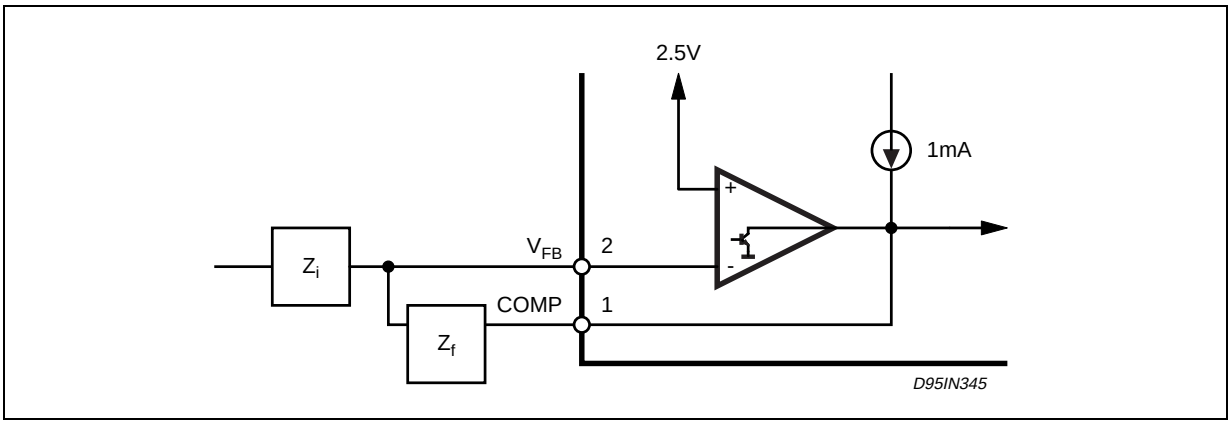

Figure 16 : Under Voltage Lockout.

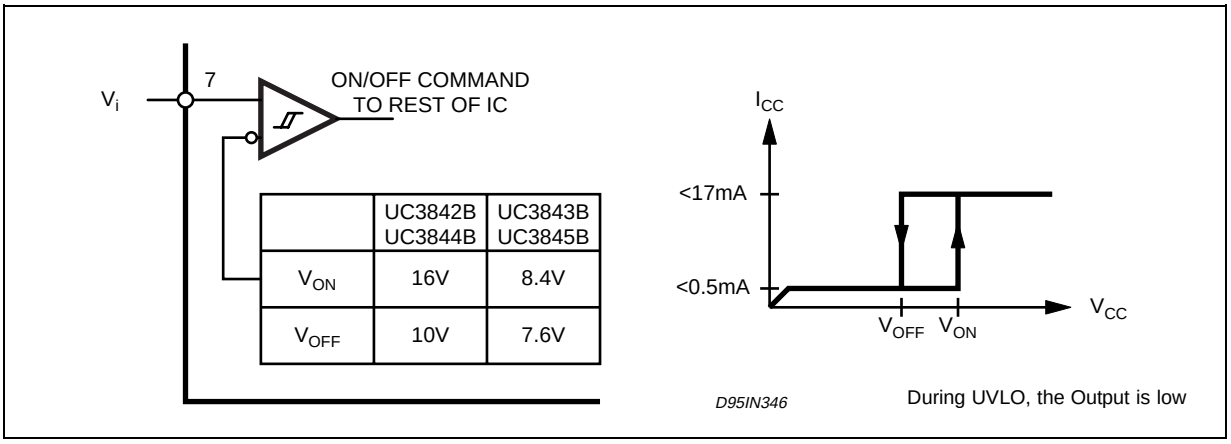

	UC3842B UC3844B	UC3843B UC3845B
V_{ON}	16V	8.4V
V_{OFF}	10V	7.6V

Figure 17 : Current Sense Circuit .

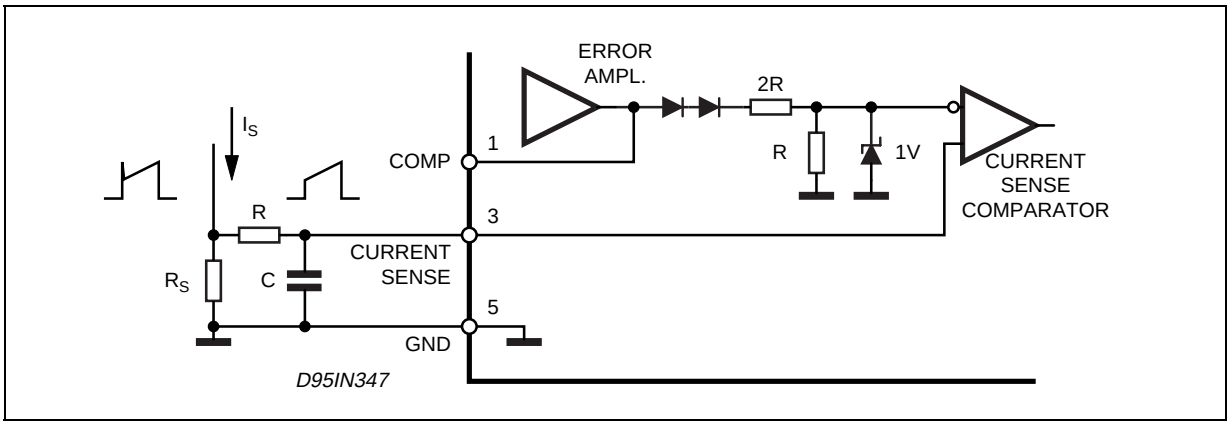

Peak current (i_S) is determined by the formula

$$I_{S\,max} \approx \frac{1.0\ V}{R_S}$$

A small RC filter may be required to suppress switch transients.

Figure 18 : Slope Compensation Techniques.

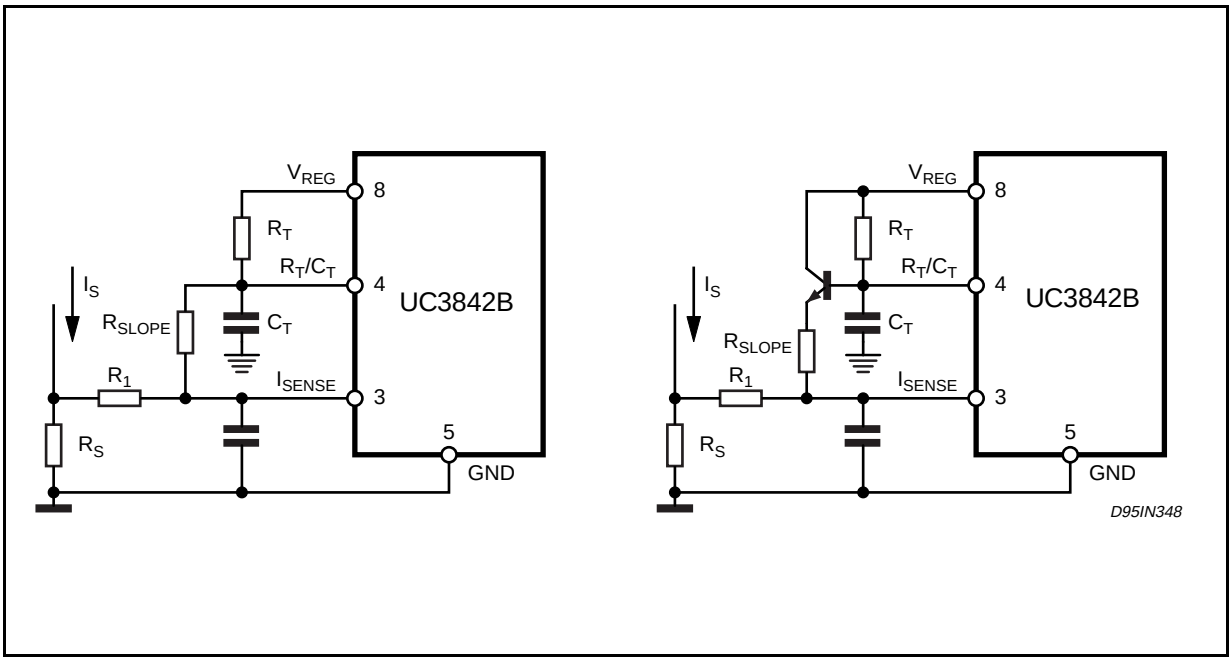

Figure 19 : Isolated MOSFET Drive and Current Transformer Sensing.

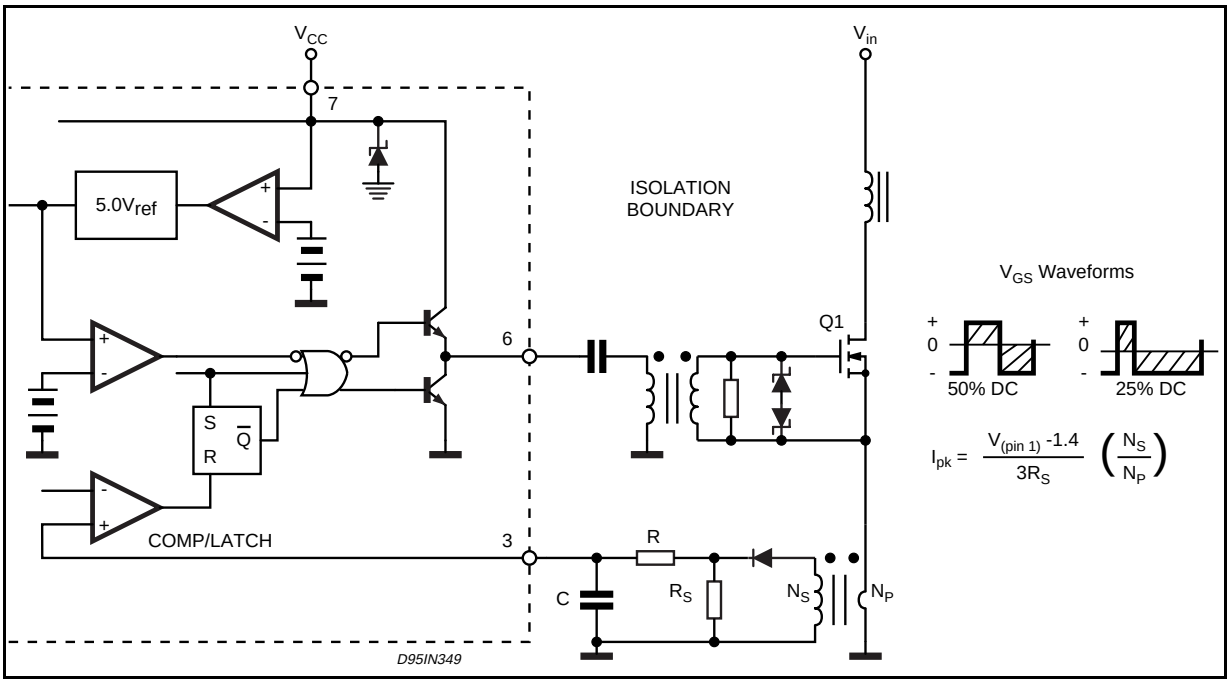

Figure 20 : Latched Shutdown.

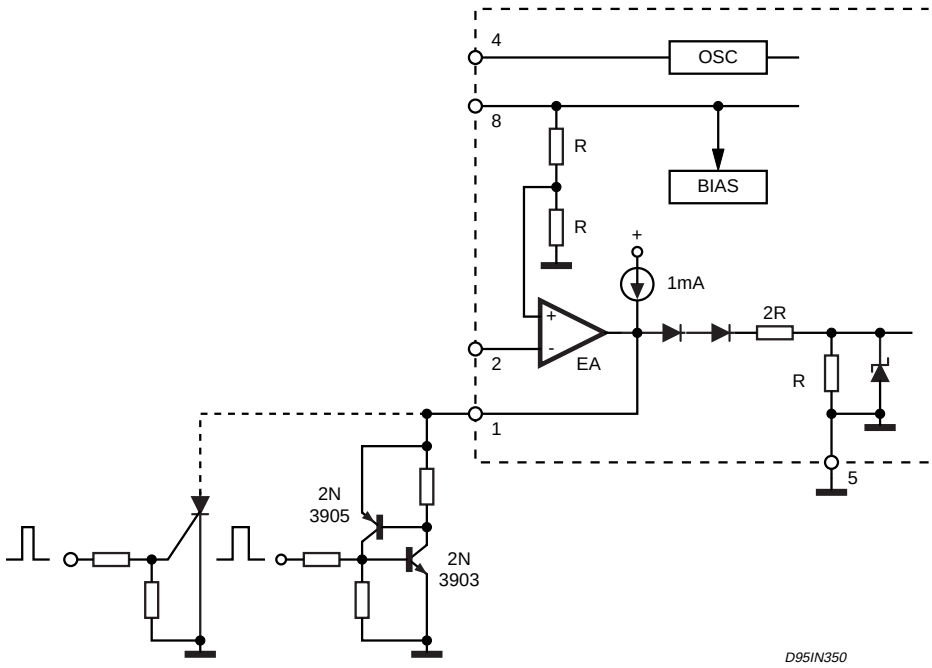

SCR must be selected for a holding current of less than 0.5mA at $T_{A(min)}$.
The simple two transistor circuit can be used in place of the SCR as shown. All resistors are 10K.

Figure 21: Error Amplifier Compensation

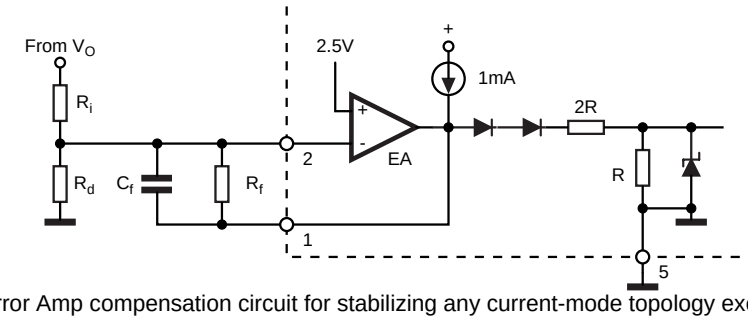

Error Amp compensation circuit for stabilizing any current-mode topology except for boost and flyback converters operating with continuous inductor current.

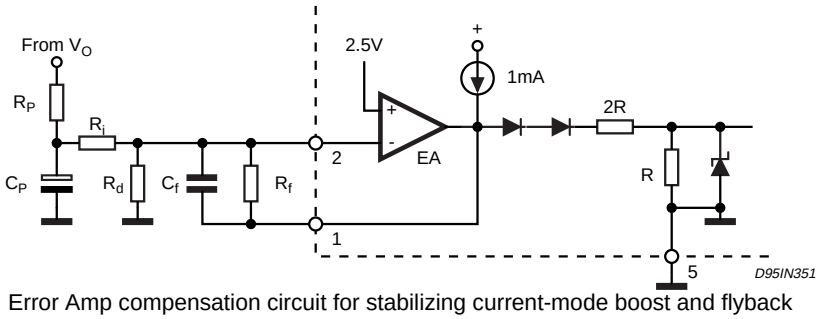

Error Amp compensation circuit for stabilizing current-mode boost and flyback topologies operating with continuous inductor current.

Figure 22: External Clock Synchronization.

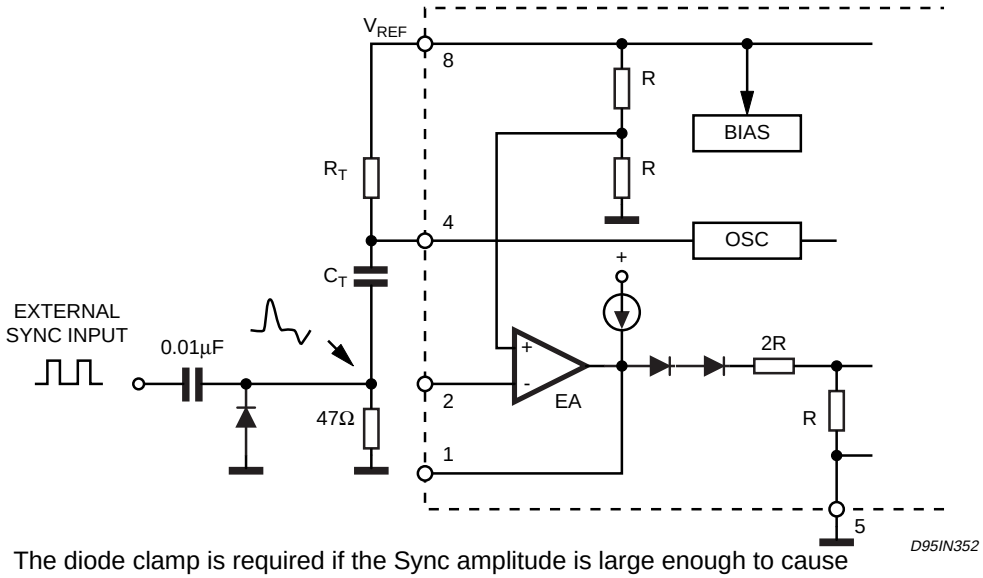

The diode clamp is required if the Sync amplitude is large enough to cause the bottom side of C_T to go more than 300mV below ground

Figure 23: External Duty Cycle Clamp and Multi Unit Synchronization.

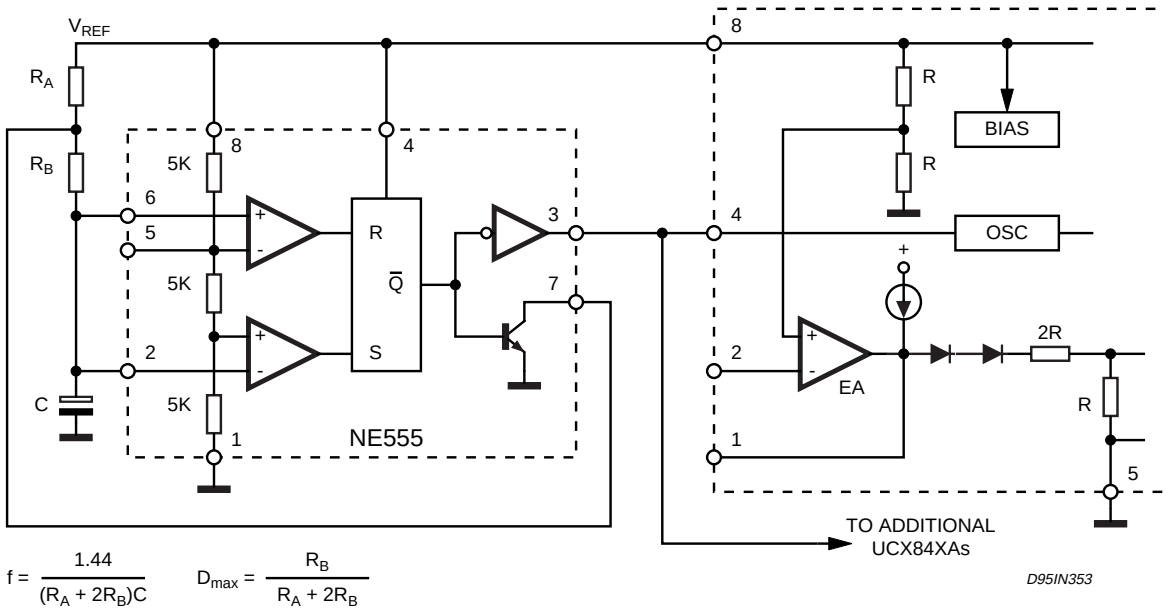

$$f = \frac{1.44}{(R_A + 2R_B)C} \qquad D_{max} = \frac{R_B}{R_A + 2R_B}$$

Figure 24: Soft-Start Circuit

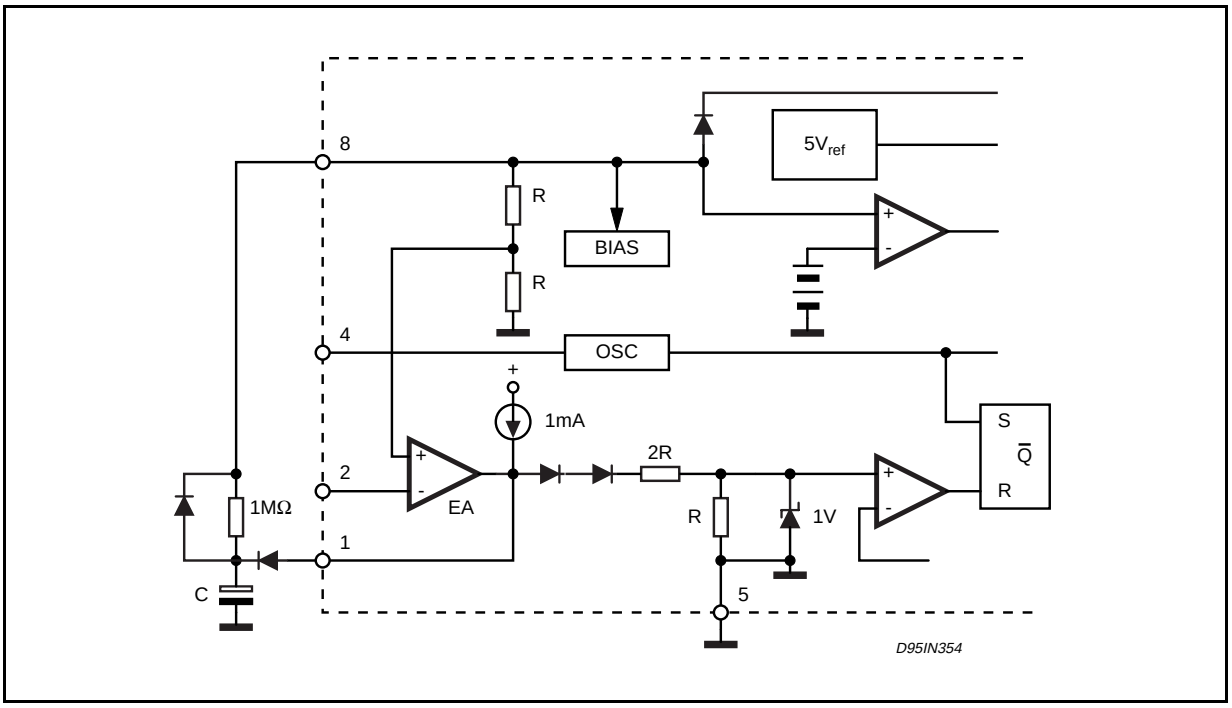

Figure 25: Soft-Start and Error Amplifier Output Duty Cycle Clamp.

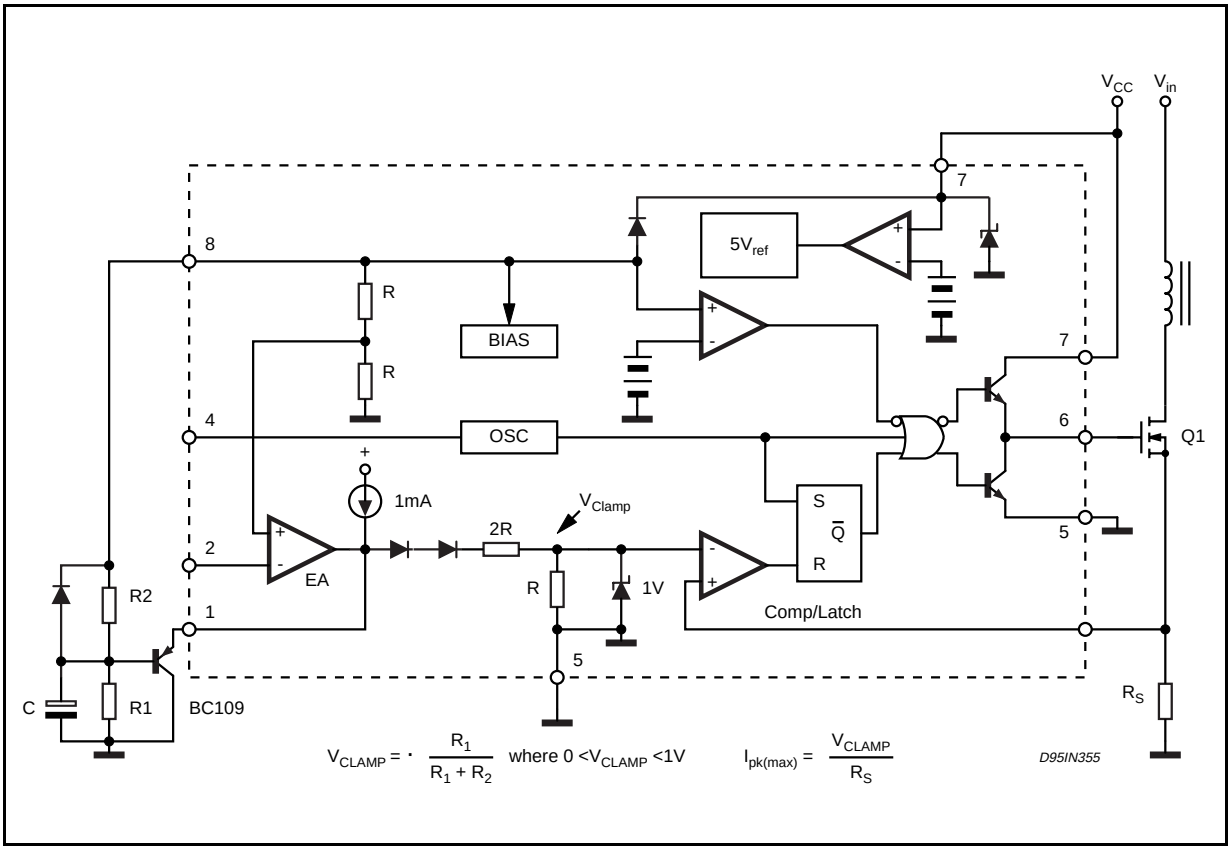

DIM.	mm			inch		
	MIN.	TYP.	MAX.	MIN.	TYP.	MAX.
A			1.75			0.069
a1	0.1		0.25	0.004		0.010
a2			1.65			0.065
a3	0.65		0.85	0.026		0.033
b	0.35		0.48	0.014		0.019
b1	0.19		0.25	0.007		0.010
C	0.25		0.5	0.010		0.020
c1	45° (typ.)					
D (1)	4.8		5.0	0.189		0.197
E	5.8		6.2	0.228		0.244
e		1.27			0.050	
e3		3.81			0.150	
F (1)	3.8		4.0	0.15		0.157
L	0.4		1.27	0.016		0.050
M			0.6			0.024
S	8° (max.)					

(1) D and F do not include mold flash or protrusions. Mold flash or potrusions shall not exceed 0.15mm (.006inch).

OUTLINE AND MECHANICAL DATA

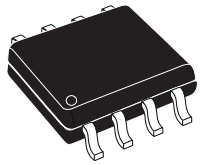

SO8

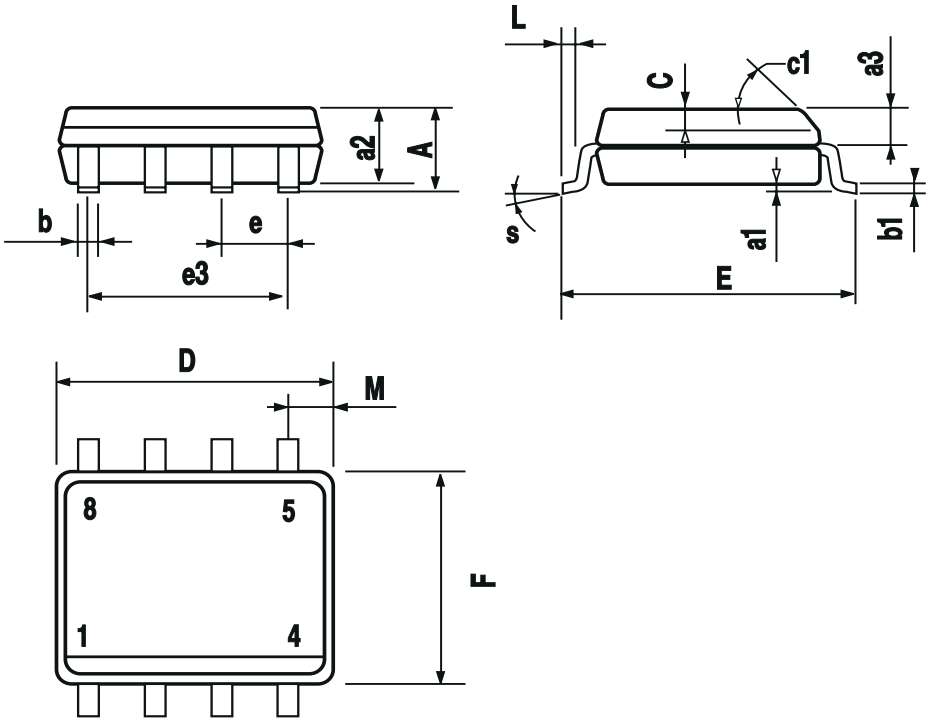

DIM.	mm			inch		
	MIN.	TYP.	MAX.	MIN.	TYP.	MAX.
A		3.32			0.131	
a1	0.51			0.020		
B	1.15		1.65	0.045		0.065
b	0.356		0.55	0.014		0.022
b1	0.204		0.304	0.008		0.012
D			10.92			0.430
E	7.95		9.75	0.313		0.384
e		2.54			0.100	
e3		7.62			0.300	
e4		7.62			0.300	
F			6.6			0.260
I			5.08			0.200
L	3.18		3.81	0.125		0.150
Z			1.52			0.060

OUTLINE AND MECHANICAL DATA

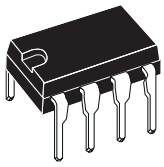

Minidip

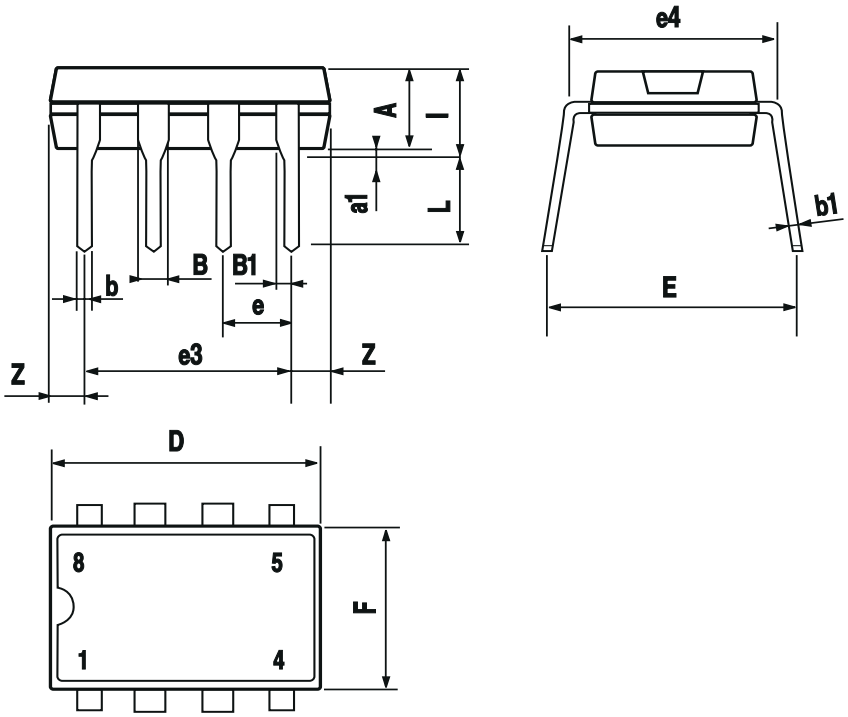

Information furnished is believed to be accurate and reliable. However, STMicroelectronics assumes no responsibility for the consequences of use of such information nor for any infringement of patents or other rights of third parties which may result from its use. No license is granted by implication or otherwise under any patent or patent rights of STMicroelectronics. Specification mentioned in this publication are subject to change without notice. This publication supersedes and replaces all information previously supplied. STMicroelectronics products are not authorized for use as critical components in life support devices or systems without express written approval of STMicroelectronics.

The ST logo is a registered trademark of STMicroelectronics

© 1999 STMicroelectronics – Printed in Italy – All Rights Reserved

STMicroelectronics GROUP OF COMPANIES

Australia - Brazil - Canada - China - France - Germany - Italy - Japan - Korea - Malaysia - Malta - Mexico - Morocco - The Netherlands - Singapore - Spain - Sweden - Switzerland - Taiwan - Thailand - United Kingdom - U.S.A.

http://www.st.com

Looking for pricing, stock, or lifecycle information?

Click below to explore more details on WIN SOURCE:

- View E-UC3843BN on WIN SOURCE
- STMicroelectronics Information

Optimize Your Supply Chain with WIN SOURCE Solutions

- Global Sourcing Solution
- Obsolete Management
- Cost Control Management
- Shortage Management
- Alternative Solution
- Excess Inventory Management