THE DATASHEET OF

TPS65185RSLT

www.win-source.net 0086-755-83957316

TPS65185x PMIC for E Ink® Vizplex™ Enabled Electronic Paper Display

1 Features

- Single Chip Power-Management Solution for E Ink® Vizplex™ Electronic Paper (E-Paper) Displays
- Generates Positive and Negative Gates, and Source Driver Voltages and Back-Plane Bias From a Single, Low-Voltage Input Supply
- Supports 9.7-Inch and Larger Panel Sizes
- 3-V to 6-V Input Voltage Range
- Boost Converter for Positive Rail Base
- Inverting Buck-Boost Converter for Negative Rail Base
- Two Adjustable LDOs for Source Driver Supply
  - TPS65185 LDO1: 15 V, 120 mA (VPOS)
  - TPS65185 LDO2: –15 V, 120 mA (VNEG)
  - TPS651851 LDO1: 15 V, 200 mA at $V_{IN} \geq 3.6$ V (VPOS)
  - TPS651851 LDO2: –15 V, 200 mA at $V_{IN} \geq 3.6$ V (VNEG)
- Accurate Output Voltage Tracking
  - VPOS – VNEG = ±50 mV
- Two Charge Pumps for Gate Driver Supply
  - CP1: 22 V, 15 mA (VDDH)
  - CP2: –20 V, 15 mA, (VEE)
- Adjustable VCOM Driver for Accurate Panel-Backplane Biasing
  - 0 V to –5.11 V
  - ± 1.5% accuracy (±10 mV)
  - 9-Bit Control (10-mV Nominal Step Size)
- Active Discharge on All Rails
- Integrated 10-Ω, 3.3-V Power Switch for Disabling System Power Rail to E-Ink Panel

2 Applications

- Power Supply for Active Matrix E Ink Vizplex Panels
- Electronic Paper Display (EPD) Power Supplies
- E-Book Readers
- Dual-Display Phone and Tablets
- Application Processors With Integrated or Software Timing Controller (OMAP™)

3 Description

The TPS65185x device is a single-chip power supply designed to for E Ink Vizplex displays used in portable e-reader applications, and the device supports panel sizes up to 9.7 inches and greater. Two high efficiency DC-DC boost converters generate ±16-V rails that are boosted to 22 V and –20 V by two change pumps to provide the gate driver supply for the Vizplex panel. Two tracking LDOs create the ±15-V source driver supplies that support up to 120/200 mA (TPS65185/TPS651851) of output current. All rails are adjustable through the I^2C interface to accommodate specific panel requirements.

Device Information(1)

PART NUMBER	PACKAGE	BODY SIZE (NOM)
TPS65185	RGZ (48)	7.00 mm × 7.00 mm
	RSL (48)	6.00 mm × 6.00 mm
TPS651851	RSL (48)	6.00 mm × 6.00 mm

(1) For all available packages, see the orderable addendum at the end of the data sheet.

Typical Application Schematic

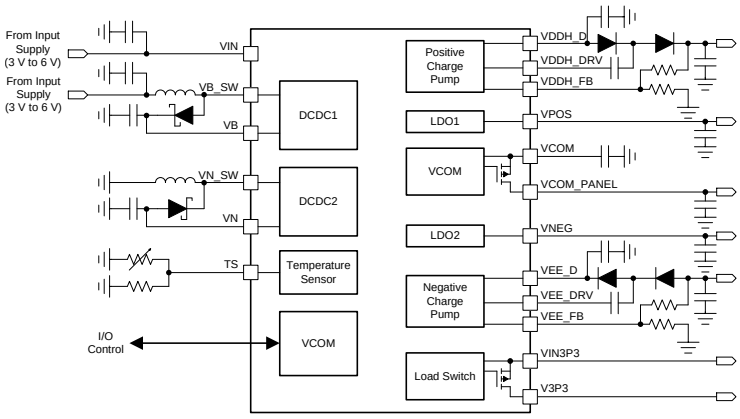

Copyright © 2017, Texas Instruments Incorporated

An IMPORTANT NOTICE at the end of this data sheet addresses availability, warranty, changes, use in safety-critical applications, intellectual property matters and other important disclaimers. PRODUCTION DATA.

Table of Contents

1 Features ... 1
2 Applications ... 1
3 Description ... 1
4 Revision History ... 2
5 Description (continued) ... 4
6 Pin Configuration and Functions ... 4
7 Specifications ... 7
7.1 Absolute Maximum Ratings ... 7
7.2 ESD Ratings ... 7
7.3 Recommended Operating Conditions ... 7
7.4 Thermal Information ... 8
7.5 Electrical Characteristics ... 8
7.6 Timing Requirements: Data Transmission ... 12
7.7 Typical Characteristics ... 14
8 Detailed Description ... 17
8.1 Overview ... 17
8.2 Functional Block Diagram ... 18
8.3 Feature Description ... 19
8.4 Device Functional Modes ... 27
8.5 Programming ... 29
8.6 Register Maps ... 31
9 Application and Implementation ... 49
9.1 Application Information ... 49
9.2 Typical Application ... 49
10 Power Supply Recommendations ... 51
11 Layout ... 52
11.1 Layout Guidelines ... 52
11.2 Layout Example ... 52
12 Device and Documentation Support ... 53
12.1 Device Support ... 53
12.2 Documentation Support ... 53
12.3 Receiving Notification of Documentation Updates 53
12.4 Community Resources ... 53
12.5 Trademarks ... 53
12.6 Electrostatic Discharge Caution ... 53
12.7 Glossary ... 53
13 Mechanical, Packaging, and Orderable Information ... 53

4 Revision History

NOTE: Page numbers for previous revisions may differ from page numbers in the current version.

Changes from Revision F (June 2017) to Revision G	Page
• Added the load switch and updated the negative and positive charge pumps in the *Typical Application Schematic* figure	1
• Added capacitor connection to the pin description for INT_LDO, VB, VCOM, VCOM_PWR, VDDH_D, VEE_D, VIN, VIN_P, VN, VNEG, VNEG_IN, VPOS, VPOS_IN, VREF in the *Pin Functions* table	5
• Changed the *Power-Up and Power-Down Timing Diagram*	13
• Changed the *Functional Block Diagram*	18
• Changed the schematic in the *Typical Application* section	49

Changes from Revision E (February 2017) to Revision F	Page
• Updated pin out drawing to match *Pin Functions* table	4

Changes from Revision D (December 2016) to Revision E	Page
• Changed changed the maximum input voltage for TPS651851 from 5.9 V to 6 V	7
• Changed the V_{IN} range to the V_{OUTTOL} and V_{DIFF} parameters in the *Electrical Characteristics* table	9
• Changed the *Electrostatic Discharge Caution* statement	53

Changes from Revision C (August 2015) to Revision D	Page
• Added TPS651851 device to the data sheet	1
• Added the input voltage range for TPS651851	1
• Added TPS651851 LDO1 and LDO2 current limit of 200 mA	1
• Updated the switch current limit to 2.5 A on DCDC1 for TPS651851	8
• Updated the LDO1 ILOAD current limit for TPS651851	9
• Updated the LDO1 ILIMIT current limit for TPS651851	9

Copyright © 2011–2017, Texas Instruments Incorporated

- Updated the LDO2 ILOAD current range for different VIN conditions 9
- Updated the LDO2 ILIMIT output current limit to different VIN conditions 9
- Updated the output voltage range (VDDH_OUT) conditions on charge pump 1 10
- Added the ILOAD current range option for TPS651851 on CP1 10
- Added the ILOAD current range option for TPS651851 on CP2 10
- Added *Receiving Notification of Documentation Updates* to *Device and Documentation Support* section 53

Changes from Revision B (October 2011) to Revision C **Page**

- Added *ESD Ratings* table, *Feature Description* section, *Device Functional Modes*, *Application and Implementation* section, *Power Supply Recommendations* section, *Layout* section, *Device and Documentation Support* section, and *Mechanical, Packaging, and Orderable Information* section 1

5 Description (continued)

Accurate back-plane biasing is provided by a linear amplifier that can be adjusted from 0 V to –5.11 V with 9-bit control through the serial interface; it can source or sink current depending on panel condition. The TPS65185x supports automatic panel kickback voltage measurement, which eliminates the need for manual VCOM calibration in the production line. The measurement result can be stored in non-volatile memory to become the new VCOM power-up default value.

TPS65185 is available in two packages, a 48-pin 7-mm × 7-mm^2 VQFN (RGZ) with 0.5-mm pitch, and a 48-pin 6-mm × 6-mm^2 VQFN (RSL) with 0.4-mm pitch. The TPS651851 is available in a 48-pin 6-mm × 6-mm^2 VQFN (RSL) with 0.4-mm pitch.

6 Pin Configuration and Functions

RGZ Package and RSL Package
48-Pin VQFN With Exposed Thermal Pad
Top View

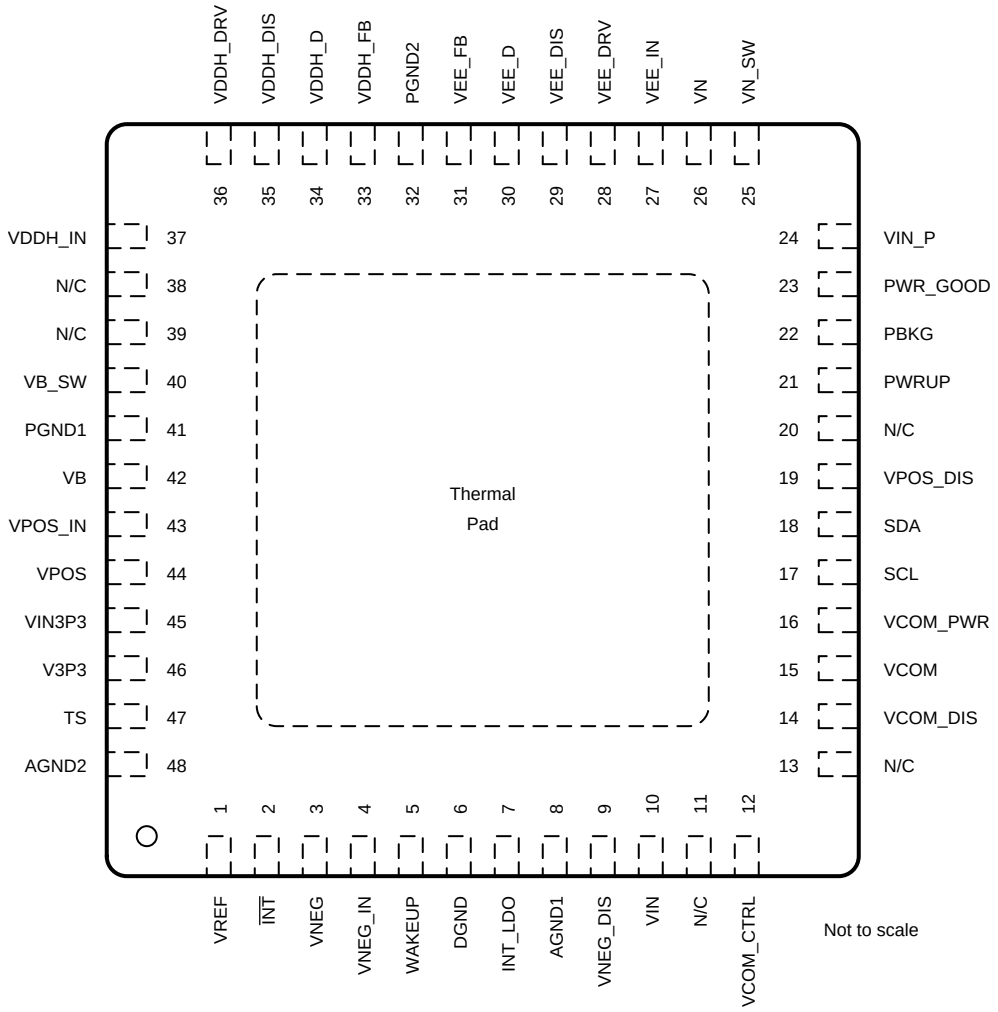

Copyright © 2011–2017, Texas Instruments Incorporated

Pin Functions

PIN		I/O	DESCRIPTION
NAME	NO.		
AGND1	8	—	Analog ground for general analog circuitry.
AGND2	48	—	Reference point to external thermistor and linearization resistor.
DGND	6	—	Digital ground. Connect to ground plane.
$\overline{\text{INT}}$	2	O	Open drain interrupt pin (active low).
INT_LDO	7	O	Filter pin for 2.7-V internal supply. Connect a 4.7-µF capacitor from this pin to ground.
N/C	11, 13, 20, 38, 39	—	Not internally connected.
PBKG	22	—	Die substrate. Connect to the VN pin (–16 V) with a short, wide trace. A wide copper trace improves heat dissipation.
PGND1	41	—	Power ground for DCDC1.
PGND2	32	—	Power ground for CP1 (VDDH) and CP2 (VEE) charge pumps.
PWR_GOOD	23	O	Open-drain power good output pin. Pin is pulled low when one or more rails are disabled or not in regulation. DCDC1, DCDC2, and VCOM have no effect on this pin.(1)
PWRUP	21	I	Power-up pin. Pull this pin high to power up all output rails.(1)
SCL	17	I	Serial interface (I^2C) clock input.
SDA	18	I/O	Serial interface (I^2C) data input/output.
TS	47	I	Thermistor input pin. Connect a 10-kΩ NTC thermistor and a 43-kΩ linearization resistor between this pin and AGND.
V3P3	46	O	Output pin of 3.3-V power switch.
VB	42	I	Feedback pin for boost converter (DCDC1) and supply for VPOS LDO and VDDH charge pump. Connect a 4.7-µF capacitor from this pin to ground.
VB_SW	40	O	Boost converter switch out (DCDC1).
VCOM	15	O	Filter pin for panel common-voltage driver. Connect a 4.7-µF capacitor from this pin to ground.
VCOM_CTRL	12	I	VCOM enable. Pull this pin high to enable the VCOM amplifier. When pin is pulled low and VN is enabled, VCOM discharge is enabled.(2)
VCOM_DIS	14	I	Discharge pin for VCOM. Connect to ground to discharge VCOM to ground whenever VCOM is disabled. Leave floating if discharge function is not desired.
VCOM_PWR	16	I	Internal supply input pin to VCOM buffer. Connect to the output of DCDC2, and connect a 4.7-µF capacitor from this pin to ground.
VDDH_D	34	O	Base voltage output pin for positive charge pump (CP1). Connect a 100-nF capacitor from this pin to ground.
VDDH_DIS	35	I	Discharge pin for VDDH. Connect to VDDH to discharge VDDH to ground whenever the rail is disabled. Leave floating if discharge function is not desired.
VDDH_DRV	36	O	Driver output pin for positive charge pump (CP1).
VDDH_FB	33	I	Feedback pin for positive charge pump (CP1).
VDDH_IN	37	I	Input supply pin for positive charge pump (CP1).
VEE_D	30	O	Base voltage output pin for negative charge pump (CP2). Connect a 100-nF capacitor from this pin to ground.
VEE_DIS	29	I	Discharge pin for VEE. Connect a resistor from VEE _DIS to VEE to discharge VEE to ground whenever the rail is disabled. Leave floating if discharge function is not desired.
VEE_DRV	28	O	Driver output pin for negative charge pump (CP2).
VEE_FB	31	I	Feedback pin for negative charge pump (CP2).
VEE_IN	27	I	Input supply pin for negative charge pump (CP2) (VEE).
VIN	10	I	Input power supply to general circuitry. Connect a 10-µF capacitor from this pin to ground.
VIN3P3	45	I	Input pin to 3.3-V power switch.
VIN_P	24	I	Input power supply to inverting buck-boost converter (DCDC2). Connect a 10-µF capacitor from this pin to ground.
VN	26	I	Feedback pin for inverting buck-boost converter (DCDC2) and supply for VNEG LDO and VEE charge pump. Connect a 4.7-µF capacitor from this pin to ground.

(1) There will be 0-ns of deglitch for PWRx.
(2) There will be 62.52-µs of deglitch for VCOM_CTRL.

Copyright © 2011–2017, Texas Instruments Incorporated

Pin Functions (continued)

PIN		I/O	DESCRIPTION
NAME	NO.		
VNEG	3	O	Negative supply output pin for panel source drivers. Connect a 4.7-µF capacitor from this pin to ground.
VNEG_DIS	9	O	Discharge pin for VNEG. Connect to VNEG to discharge VNEG to ground whenever the rail is disabled. Leave floating if discharge function is not desired.
VNEG_IN	4	I	Input pin for LDO2 (VNEG). Connect a 4.7-µF capacitor from this pin to ground.
VN_SW	25	O	Inverting buck-boost converter switch out (DCDC2).
VPOS	44	O	Positive supply output pin for panel source drivers. Connect a 4.7-µF capacitor from this pin to ground.
VPOS_DIS	19	I	Discharge pin for VPOS. Connect a resistor from VPOS_DIS to VPOS to discharge VPOS to ground whenever the rail is disabled. Leave floating if discharge function is not desired.
VPOS_IN	43	I	Input pin for LDO1 (VPOS). Connect a 4.7-µF capacitor from this pin to ground.
VREF	1	O	Filter pin for 2.25-V internal reference to ADC. Connect a 4.7-µF capacitor from this pin to ground.
WAKEUP	5	I	Wake up pin (active high). Pull this pin high to wake up from sleep mode. The device accepts I^2C commands after WAKEUP pin is pulled high but power rails remain disabled until PWRUP pin is pulled high.(3)
Thermal Pad	—	—	The thermal pad is internally connected to the PBKG pin. Connect the thermal pad to the VN pin with a short, wide trace. A wide copper trace improves heat dissipation. Do not connect the thermal pad to ground.

(3) There will be 93.75-µs of deglitch for WAKEUP.

Copyright © 2011–2017, Texas Instruments Incorporated

7 Specifications

7.1 Absolute Maximum Ratings

over operating free-air temperature range (unless otherwise noted) [1][2]

		MIN	MAX	UNIT
	Input voltage at VIN[2], VIN_P, VIN3P3	–0.3	7	V
	Ground pins to system ground	–0.3	0.3	V
	Voltage at SDA, SCL, WAKEUP, PWRUP, VCOM_CTRL, VDDH_FB, VEE_FB, PWR_GOOD, nINT	–0.3	3.6	V
	Voltage on VB, VB_SW, VPOS_IN, VPOS_DIS, VDDH_IN	–0.3	20	V
	VDDH_DIS	–0.3	30	V
	Voltage on VN, VEE_IN, VCOM_PWR, VNEG_DIS, VNEG_IN	–20	0.3	V
	Voltage from VIN_P to VN_SW	–0.3	30	V
	Voltage on VCOM_DIS	–5	0.3	V
	VEE_DIS	–30	0.3	V
	Peak output current	Internally limited		mA
	Continuous total power dissipation		2	W
T_J	Operating junction temperature	–10	125	°C
T_A	Operating ambient temperature[3]	–10	85	°C
T_{stg}	Storage temperature	–65	150	°C

(1) Stresses beyond those listed under *Absolute Maximum Ratings* may cause permanent damage to the device. These are stress ratings only, and functional operation of the device at these or any other conditions beyond those indicated under *Recommended Operating Conditions* is not implied. Exposure to absolute maximum rated conditions for extended periods may affect device reliability.
(2) All voltage values are with respect to network ground terminal.
(3) It is recommended that copper plane in proper size on board be in contact with die thermal pad to dissipate heat efficiently. Thermal pad is electrically connected to PBKG, which is supposed to be tied to the output of buck-boost converter. Thus wide copper trace in the buck-boost output will help heat dissipated efficiently.

7.2 ESD Ratings

			VALUE	UNIT
$V_{(ESD)}$	Electrostatic discharge	Human-body model (HBM), per ANSI/ESDA/JEDEC JS-001[1]	±2000	V
		Charged-device model (CDM), per JEDEC specification JESD22-C101[2]	±500	

(1) JEDEC document JEP155 states that 500-V HBM allows safe manufacturing with a standard ESD control process.
(2) JEDEC document JEP157 states that 250-V CDM allows safe manufacturing with a standard ESD control process.

7.3 Recommended Operating Conditions

over operating free-air temperature range (unless otherwise noted)

		MIN	NOM	MAX	UNIT
	Input voltage at VIN, VIN_P, VIN3P3	3	3.7	6	V
	Voltage at SDA, SCL, WAKEUP, PWRUP, VCOM_CTRL, VDDH_FB, VEE_FB, PWR_GOOD, nINT	0		3.6	V
T_A	Operating ambient temperature	–10		85	°C
T_J	Operating junction temperature	–10		125	°C

Copyright © 2011–2017, Texas Instruments Incorporated

7.4 Thermal Information

THERMAL METRIC[1]		TPS65185		TPS651851	UNIT
		RGZ (VQFN)	RSL (VQFN)	RSL (VQFN)	
		48 PINS	48 PINS	48 PINS	
$R_{\theta JA}$	Junction-to-ambient thermal resistance	30	30	30	°C/W
$R_{\theta JC(top)}$	Junction-to-case (top) thermal resistance	15.6	16.2	16.2	°C/W
$R_{\theta JB}$	Junction-to-board thermal resistance	6.6	5.1	5.1	°C/W
ψ_{JT}	Junction-to-top characterization parameter	0.2	0.2	0.2	°C/W
ψ_{JB}	Junction-to-board characterization parameter	6.6	5.1	5.1	°C/W
$R_{\theta JC(bot)}$	Junction-to-case (bottom) thermal resistance	0.9	0.9	0.9	°C/W

(1) For more information about traditional and new thermal metrics, see the *Semiconductor and IC Package Thermal Metrics* application report.

7.5 Electrical Characteristics

PARAMETER		TEST CONDITIONS	MIN	TYP	MAX	UNIT
INPUT VOLTAGE						
V_{IN}	Input voltage range		3	3.7	6	V
V_{UVLO}	Undervoltage lockout threshold	V_{IN} falling		2.9		V
V_{HYS}	Undervoltage lockout hysteresis	V_{IN} rising		400		mV
INPUT CURRENT						
I_Q	Operating quiescent current into V_{IN}	Device switching, no load		5.5		mA
I_{STD}	Operating quiescent current into V_{IN}	Device in standby mode		130		µA
I_{SLEEP}	Shutdown current	Device in sleep mode		3.5	10	µA
INTERNAL SUPPLIES						
VI_{NT_LDO}	Internal supply			2.7		V
C_{INT_LDO}	Nominal output capacitor	Capacitor tolerance ±10%	1	4.7		µF
V_{REF}	Internal supply			2.25		V
C_{REF}	Nominal output capacitor	Capacitor tolerance ±10%	3.3	4.7		µF
DCDC1 (POSITIVE BOOST REGULATOR)						
V_{IN}	Input voltage range		3	3.7	6	V
PG	Power good threshold	Fraction of nominal output voltage		90%		
	Power good time-out	Not tested in production		50		ms
V_{OUT}	Output voltage range			16		V
	DC set tolerance		–4.5%		4.5%	
I_{OUT}	Output current				250	mA
$R_{DS(ON)}$	MOSFET on resistance	V_{IN} = 3.7 V		350		mΩ
I_{LIMIT}	Switch current limit (TPS65185)			1.5		A
	Switch current limit (TPS651851)			2.5		
	Switch current accuracy		–30%		30%	
f_{SW}	Switching frequency			1		MHz
L_{DCDC1}	Inductor			2.2		µH
C_{DCDC1}	Nominal output capacitor	Capacitor tolerance ±10%	1	2 × 4.7		µF
ESR	Output capacitor ESR			20		mΩ
DCDC2 (INVERTING BUCK-BOOST REGULATOR)						
V_{IN}	Input voltage range		3	3.7	6	V
PG	Power good threshold	Fraction of nominal output voltage		90%		
	Power good time-out	Not tested in production		50		ms
V_{OUT}	Output voltage range			–16		V
	DC set tolerance		–4.5%		4.5%	
I_{OUT}	Output current				250	mA

Copyright © 2011–2017, Texas Instruments Incorporated

Electrical Characteristics (continued)

PARAMETER		TEST CONDITIONS	MIN	TYP	MAX	UNIT
$R_{DS(ON)}$	MOSFET on resistance	V_{IN} = 3.7 V		350		mΩ
I_{LIMIT}	Switch current limit			1.5		A
	Switch current accuracy		–30%		30%	
L_{DCDC1}	Inductor			4.7		µH
C_{DCDC1}	Nominal output capacitor	Capacitor tolerance ±10%	1	3 × 4.7		µF
ESR	Capacitor ESR			20		mΩ
LDO1 (VPOS)						
V_{POS_IN}	Input voltage range		15.2	16	16.8	V
PG	Power good threshold	Fraction of nominal output voltage		90%		
	Power good time-out	Not tested in production		50		ms
V_{SET}	Output voltage set value	V_{IN} = 16 V, VSET[2:0] = 0x3h to 0x6h	14.25		15	V
$V_{INTERVAL}$	Output voltage set resolution	V_{IN} = 16 V		250		mV
V_{OUTTOL}	Output tolerance	V_{SET} = 15 V, I_{LOAD} = 20 mA, 3 V ≤ V_{IN} < 5.9 V	–1%		1%	
$V_{DROPOUT}$	Dropout voltage	I_{LOAD} = 120 mA			250	mV
$V_{LOADREG}$	Load regulation – DC	I_{LOAD} = 10% to 90%			1%	
I_{LOAD}	Load current range (TPS65185)	V_{IN} ≥ 3 V			120	mA
	Load current range (TPS651851)	3 V ≤ V_{IN} < 3.6 V			150	
		V_{IN} ≥ 3.6 V			200	
I_{LIMIT}	Output current limit (TPS65185)	V_{IN} ≥ 3 V	120			mA
	Output current limit (TPS651851)	3 V ≤ V_{IN} < 3.6 V	150			
		V_{IN} ≥ 3.6 V	200			
R_{DIS}	Discharge impedance to ground	Enabled when rail is disabled	800	1000	1200	Ω
	Mismatch to any other RDIS		–2%		2%	
C_{LDO1}	Nominal output capacitor	Capacitor tolerance ±10%	1	4.7		µF
LDO2 (VNEG)						
V_{NEG_IN}	Input voltage range		15.2	16	16.8	V
PG	Power good threshold	Fraction of nominal output voltage		90%		
	Power good time-out	Not tested in production		50		ms
V_{SET}	Output voltage set value	V_{IN} = –16 V VSET[2:0] = 0x3h to 0x6h	–15		–14.25	V
$V_{INTERVAL}$	Output voltage set resolution	V_{IN} = –16 V		250		mV
V_{OUTTOL}	Output tolerance	V_{SET} = –15 V, I_{LOAD} = –20 mA	–1%		1%	
$V_{DROPOUT}$	Dropout voltage	I_{LOAD} = 120 mA			250	mV
$V_{LOADREG}$	Load regulation – DC	I_{LOAD} = 10% to 90%			1%	
I_{LOAD}	Load current range	3 V ≤ V_{IN} < 3.6 V (TPS65185 and TPS651851)			120	mA
		V_{IN} ≥ 3.6 V (TPS65185 and TPS651851)			200	
I_{LIMIT}	Output current limit	3 V ≤ V_{IN} < 3.6 V (TPS65185)	180			mA
		3 V ≤ V_{IN} < 3.6 V (TPS651851)	158			
		V_{IN} ≥ 3.6 V (TPS65185 and TPS651851)	200			
R_{DIS}	Discharge impedance to ground	Enabled when rail is disabled	800	1000	1200	Ω
	Mismatch to any other RDIS		–2%		2%	
T_{SS}	Soft-start time	Not tested in production		1		ms
C_{LDO2}	Nominal output capacitor	Capacitor tolerance ±10%	1	4.7		µF

Copyright © 2011–2017, Texas Instruments Incorporated

Electrical Characteristics (continued)

PARAMETER		TEST CONDITIONS	MIN	TYP	MAX	UNIT
LD01 (POS) AND LDO2 (VNEG) TRACKING						
V_{DIFF}	Difference between VPOS and VNEG	V_{SET} = ±15 V, I_{LOAD} = ±20 mA, 0°C to 60°C ambient, 3 V ≤ V_{IN} < 5.9 V	–50		50	mV
VCOM DRIVER						
I_{VCOM}	Drive current			15		mA
V_{COM}	Allowed operating range	Outside this range VCOM is shut down and VCOMF interrupt is set	–5.5		1	V
	Accuracy	VCOM[8:0] = 0x07Dh (–1.25 V), V_{IN} = 3.4 V to 4.2 V, no load	–0.8%		0.8%	
		VCOM[8:0] = 0x07Dh (–1.25 V), V_{IN} = 3 V to 6 V, no load	–1.5%		1.5%	
	Output voltage range		–5.11		0	V
	Resolution	1LSB		10		mV
	Max number of EEPROM writes	V_{COM} calibration			100	
R_{IN}	Input impedance, HiZ state	HiZ = 1	150			MΩ
R_{DIS}	Discharge impedance to ground	VCOM_CTRL = low, Hi-Z = 0	800	1000	1200	Ω
	Mismatch to any other R_{DIS}		–2%		2%	
C_{VCOM}	Nominal output capacitor	Capacitor tolerance ±10%	3.3	4.7		µF
CP1 (VDDH) CHARGE PUMP						
V_{DDH_IN}	Input voltage range		15.2	16	16.8	V
PG	Power good threshold	Fraction of nominal output voltage		90%		
	Power good time-out	Not tested in production		50		ms
V_{FB}	Feedback voltage			0.998		V
	Accuracy	I_{LOAD} = 2 mA	–2%		2%	
V_{DDH_OUT}	Output voltage range	V_{SET} = 22 V, I_{LOAD} = 2 mA, R6 = 1MΩ, R10 = 47.5 kΩ	21	22	23	V
		V_{SET} = 25 V, I_{LOAD} = 2 mA, R6 = 1MΩ, R10 = 41.6 kΩ	24	25	26	
		V_{SET} = 28 V, I_{LOAD} = 2 mA, R6 = 1MΩ, R10 = 37 kΩ	27	28	29	
I_{LOAD}	Load current range (TPS65185)				10	mA
	Load current range (TPS651851)				15	
f_{SW}	Switching frequency			560		kHz
R_{DIS}	Discharge impedance to ground	Enabled when rail is disabled	800	1000	1200	Ω
	Mismatch to any other R_{DIS}		–2%		2%	
C_D	Driver capacitor			10		nF
C_O	Output capacitor		1	2.2		µF
CP2 (VEE) NEGATIVE CHARGE PUMP						
V_{EE_IN}	Input voltage range		15.2	16	16.8	V
PG	Power good threshold	Fraction of nominal output voltage		90%		
	Power good time-out	Not tested in production		50		ms
V_{FB}	Feedback voltage			–0.994		V
	Accuracy	I_{LOAD} = 2 mA	–2%		2%	
V_{EE_OUT}	Output voltage range	V_{SET} = –20 V, I_{LOAD} = 3 mA	–21	–20	–19	V
I_{LOAD}	Load current range (TPS65185)				12	mA
	Load current range (TPS651851)				15	
f_{SW}	Switching frequency			560		kHz
R_{DIS}	Discharge impedance to ground	Enabled when rail is disabled	800	1000	1200	Ω
	Mismatch to any other R_{DIS}		–2%		2%	

Copyright © 2011–2017, Texas Instruments Incorporated

Electrical Characteristics (continued)

PARAMETER		TEST CONDITIONS	MIN	TYP	MAX	UNIT
C_D	Driver capacitor			10		nF
C_O	Nominal output capacitor	Capacitor tolerance ±10%	1	2.2		µF
THERMISTOR MONITOR(1)						
A_{TMS}	Temperature to voltage ratio	Not tested in production		–0.0161		V/°C
$Offset_{TMS}$	Offset	Temperature = 0°C		1.575		V
V_{TMS_HOT}	Temp hot trip voltage (T = 50°C)	TEMP_HOT_SET = 0x8C		0.768		V
V_{TMS_COOL}	Temp hot escape voltage (T = 45°C)	TEMP_COOL_SET = 0x82		0.845		V
V_{TMS_MAX}	Maximum input level			2.25		V
R_{NTC_PU}	Internal pullup resistor			7.307		kΩ
R_{LINEAR}	External linearization resistor			43		kΩ
ADC_{RES}	ADC resolution	Not tested in production, 1 bit		16.1		mV
ADC_{DEL}	ADC conversion time	Not tested in production		19		µs
$TMST_{TOL}$	Accuracy	Not tested in production	–1		1	LSB
LOGIC LEVELS AND TIMING CHARTERISTICS (SCL, SDA, PWR_GOOD, PWRx, WAKEUP)						
V_{OL}	Output low threshold level	I_O = 3 mA, sink current (SDA, nINT, PWR_GOOD)			0.4	V
V_{IL}	Input low threshold level				0.4	V
V_{IH}	Input high threshold level		1.2			V
$I_{(bias)}$	Input bias current	V_{IO} = 1.8 V			1	µA
$t_{deglitch}$	Deglitch time, WAKEUP pin	Not tested in production		500		µs
	Deglitch time, PWRUP pin	Not tested in production		400		
$t_{discharge}$	Discharge delay	Not tested in production		100(2)		ms
f_{SCL}	SCL clock frequency				400	kHz
	I^2C slave address	7-bit address		0 × 68h(3)		
OSCILLATOR						
f_{OSC}	Oscillator frequency			9		MHz
	Frequency accuracy	T_A = –40°C to 85°C	–10%		10%	
THERMAL SHUTDOWN						
T_{SHTDWN}	Thermal trip point			150		°C
	Thermal hysteresis			20		°C

(1) 10-kΩ Murata NCP18XH103F03RB thermistor (1%) in parallel with a linearization resistor (43 kΩ, 1%) are used at TS pin for panel temperature measurement.
(2) Contact factory for 50-ms, 200-ms or 400-ms option.
(3) Contact TI for alternate address of 0 × 48h.

7.6 Timing Requirements: Data Transmission

V_{BAT} = 3.6 V ±5%, T_A = 25ºC, C_L = 100 pF (unless otherwise noted)

			MIN	NOM	MAX	UNIT
$f_{(SCL)}$	Serial clock frequency		100		400	kHz
$t_{HD;STA}$	Hold time (repeated) START condition. After this period, the first clock pulse is generated.	SCL = 100 kHz	4			µs
		SCL = 400 kHz	600			ns
t_{LOW}	LOW period of the SCL clock	SCL = 100 kHz	4.7			µs
		SCL = 400 kHz	1.3			
t_{HIGH}	HIGH period of the SCL clock	SCL = 100 kHz	4			µs
		SCL = 400 kHz	600			ns
$t_{SU;STA}$	Set-up time for a repeated START condition	SCL = 100 kHz	4.7			µs
		SCL = 400 kHz	600			ns
$t_{HD;DAT}$	Data hold time	SCL = 100 kHz	0		3.45	µs
		SCL = 400 kHz	0		900	ns
$t_{SU;DAT}$	Data set-up time	SCL = 100 kHz	250			ns
		SCL = 400 kHz	100			
t_r	Rise time of both SDA and SCL signals	SCL = 100 kHz			1000	ns
		SCL = 400 kHz			300	
t_f	Fall time of both SDA and SCL signals	SCL = 100 kHz			300	ns
		SCL = 400 kHz			300	
$t_{SU;STO}$	Set-up time for STOP condition	SCL = 100 kHz	4			µs
		SCL = 400 kHz	600			ns
t_{BUF}	Bus Free Time Between Stop and Start Condition	SCL = 100 kHz	4.7			µs
		SCL = 400 kHz	1.3			
t_{SP}	Pulse width of spikes that must be suppressed by the input filter	SCL = 100 kHz	n/a		n/a	ns
		SCL = 400 kHz	0		50	
C_b	Capacitive load for each bus line	SCL = 100 kHz			400	pF
		SCL = 400 kHz			400	

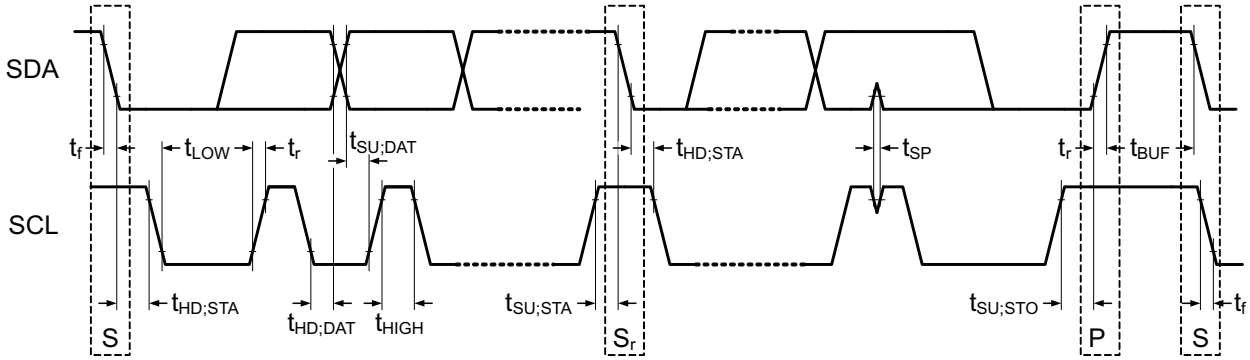

Figure 1. I²C Data Transmission Timing

Copyright © 2011–2017, Texas Instruments Incorporated

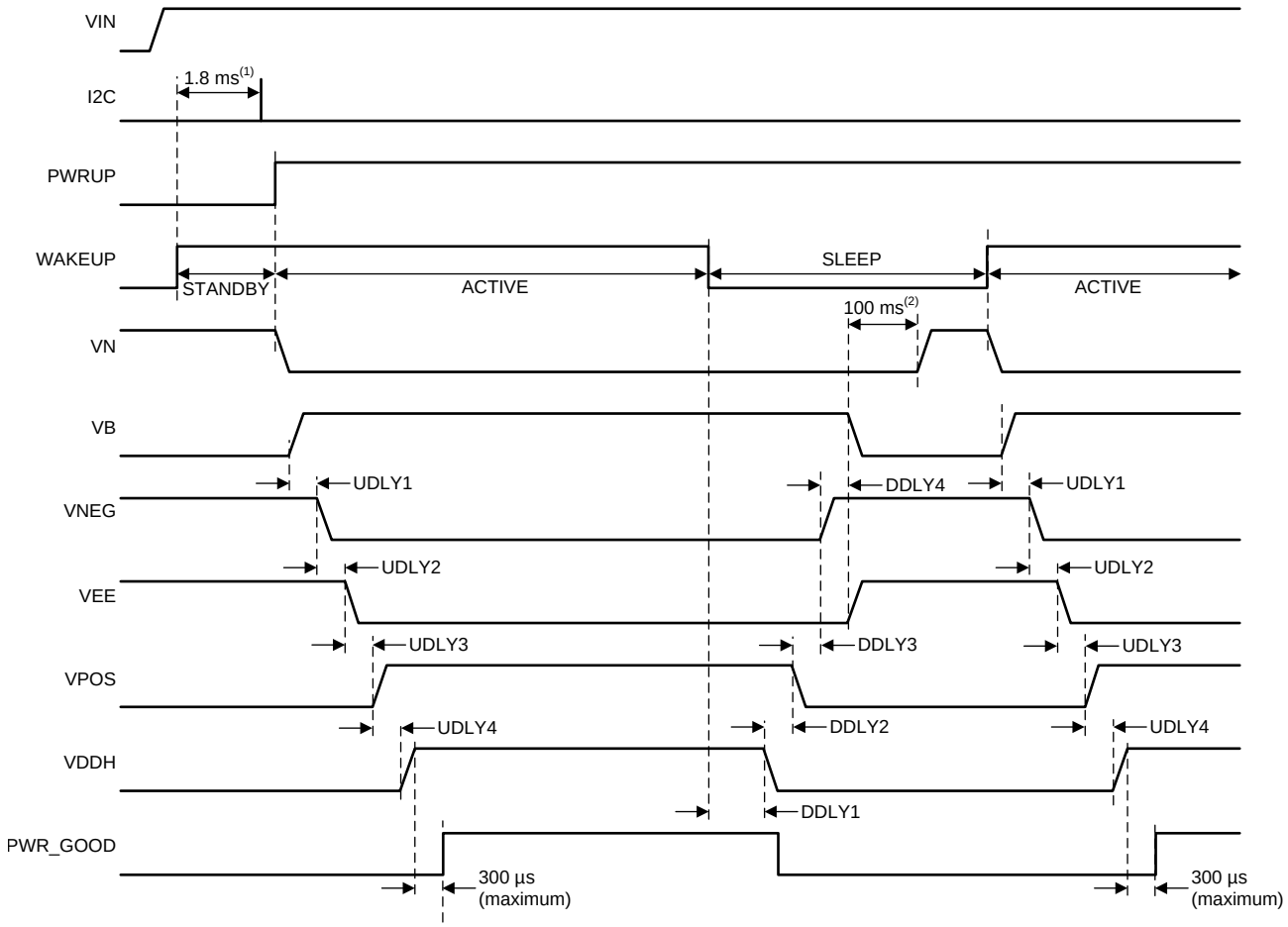

(1) Minimum delay time between WAKEUP rising edge and IC ready to accept I^2C transaction.

(2) The device does not enter the SLEEP state until the final discharge delay time has elapsed.

Note: In this example, the first power-up sequence is started by pulling the PWRUP pin high (rising edge). Power-down is initiated by pulling the WAKEUP pin low (device enters sleep mode after rails are discharged). The second power-up sequence is initiated by pulling the WAKEUP pin high while the PWRUP pin is also high (power up from sleep to active).

Figure 2. Power-Up and Power-Down Timing Diagram

7.7 Typical Characteristics

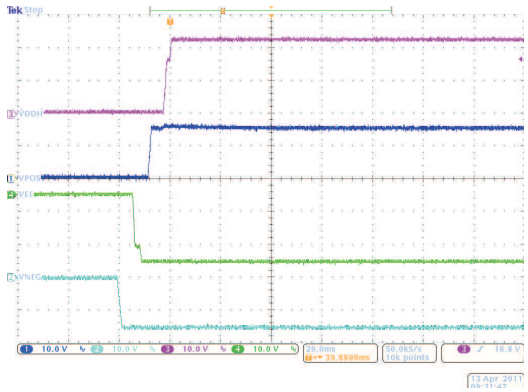

Figure 3. Default Power-Up Sequence

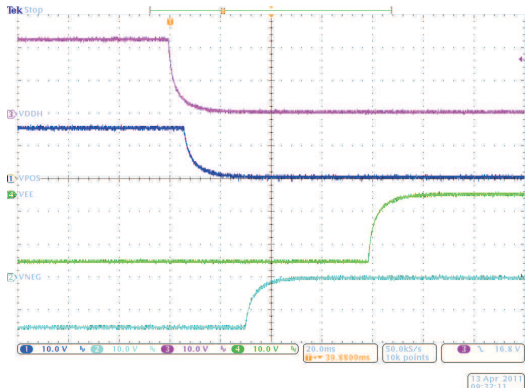

Figure 4. Default Power-Down Sequence

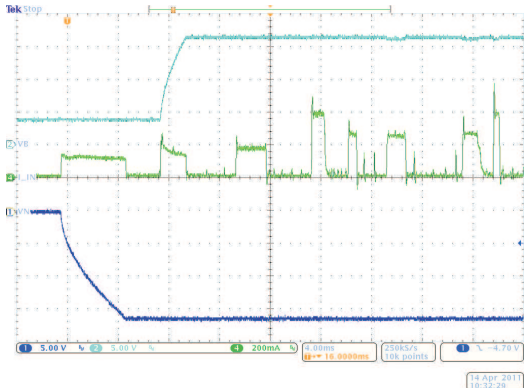

V_{IN} = 3.7 V C_{IN} = 100 µF

Figure 5. Inrush Current

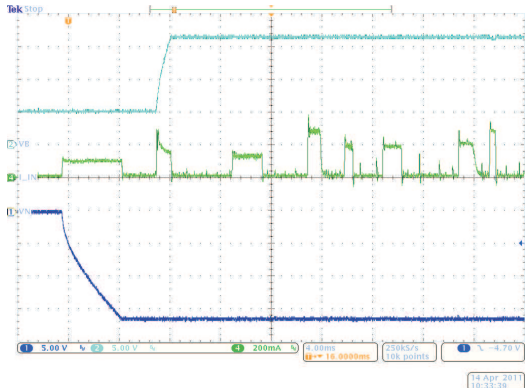

V_{IN} = 5 V C_{IN} = 100 µF

Figure 6. Inrush Current

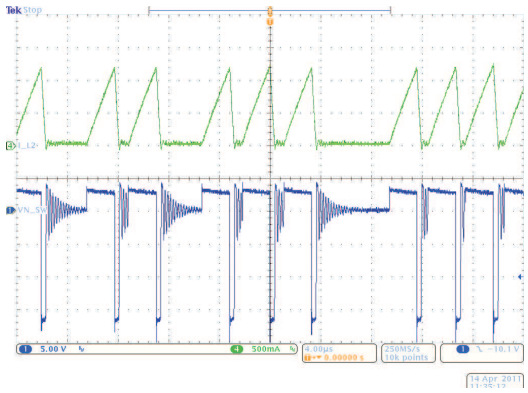

V_{IN} = 3 V $R_{LOAD, VPOS}$ = 330 Ω $R_{LOAD, VNEG}$ = 330 Ω
No Load on VDDH, VEE

Figure 7. Switching Waveforms, VN

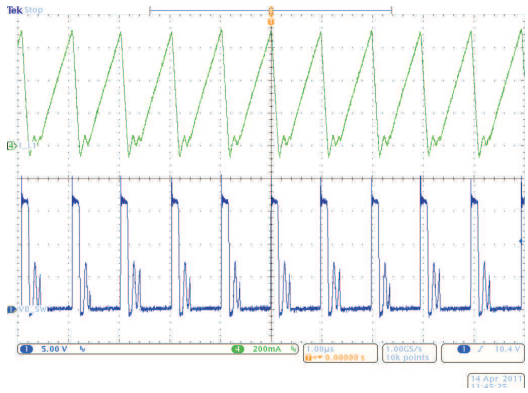

V_{IN} = 3 V $R_{LOAD, VPOS}$ = 330 Ω $R_{LOAD, VNEG}$ = 330 Ω
No Load on VDDH, VEE

Figure 8. Switching Waveforms, VB

Copyright © 2011–2017, Texas Instruments Incorporated

Typical Characteristics (continued)

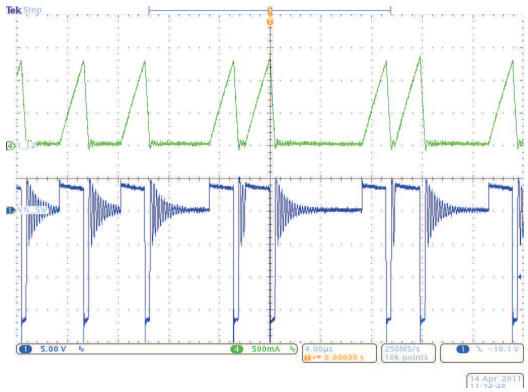

V_{IN} = 3.7 V $R_{LOAD,\ VPOS}$ = 330 Ω $R_{LOAD,\ VNEG}$ = 330 Ω
No Load on VDDH, VEE

Figure 9. Switching Waveforms, VN

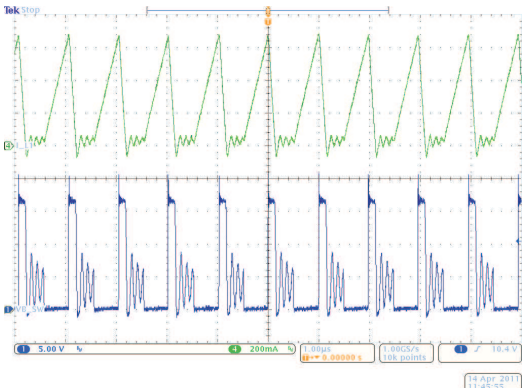

V_{IN} = 3.7 V $R_{LOAD,\ VPOS}$ = 330 Ω $R_{LOAD,\ VNEG}$ = 330 Ω
No Load on VDDH, VEE

Figure 10. Switching Waveforms, VB

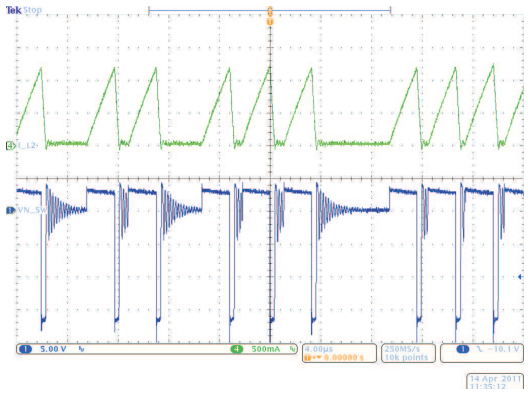

V_{IN} = 5 V $R_{LOAD,\ VPOS}$ = 330 Ω $R_{LOAD,\ VNEG}$ = 330 Ω
No Load on VDDH, VEE

Figure 11. Switching Waveforms, VN

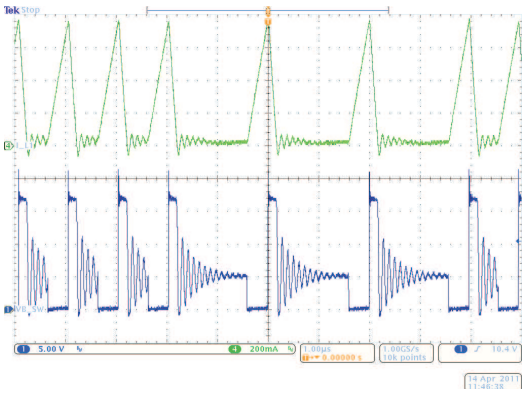

V_{IN} = 5 V $R_{LOAD,\ VPOS}$ = 330 Ω $R_{LOAD,\ VNEG}$ = 330 Ω
No Load on VDDH, VEE

Figure 12. Switching Waveforms, VB

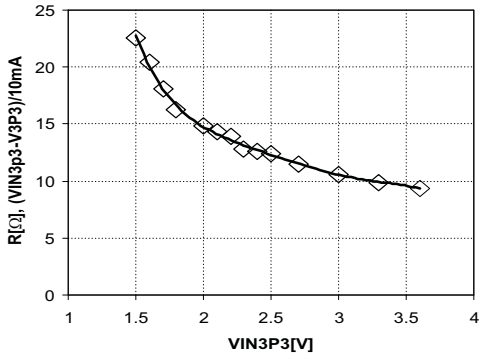

V_{IN} = 3.7 V $I_{LOAD,\ V3p3}$ = 10 mA

Figure 13. 3p3V Switch Impedance

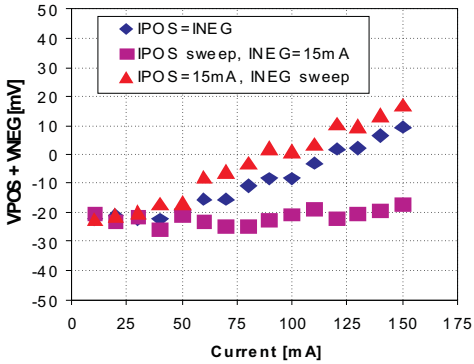

V_{IN} = 3.7 V

Figure 14. Source Driver Supply Tracking

Typical Characteristics (continued)

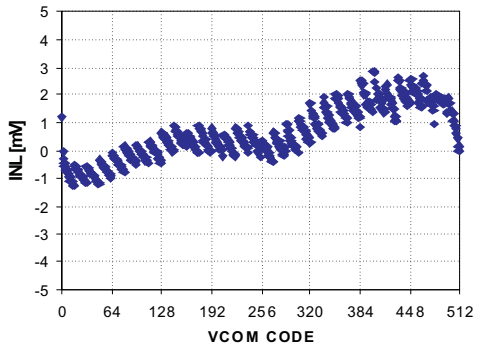

V_{IN} = 3.7 V $R_{LOAD, VCOM}$ = 1 kΩ

Figure 15. VCOM Integrated Non-Linearity

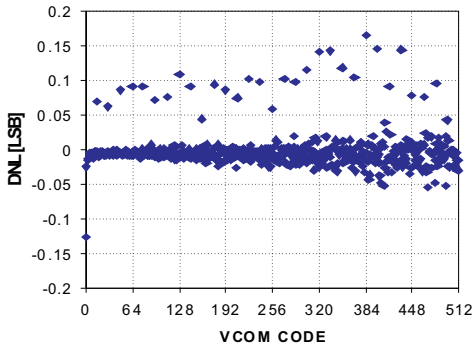

V_{IN} = 3.7 V $R_{LOAD, VCOM}$ = 1 kΩ

Figure 16. VCOM Differential Non-Linearity

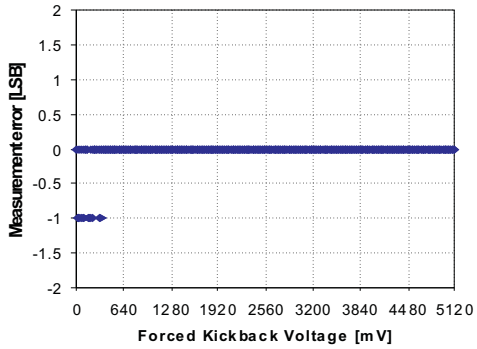

V_{IN} = 3.7 V

Figure 17. Kickback Voltage Measurement Error

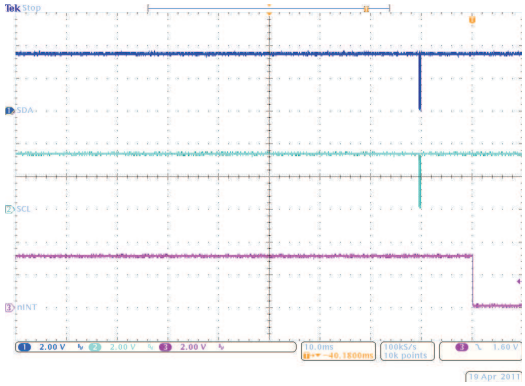

V_{IN} = 3.7 V AVG[1:0] = 00 (Single Measurement)
Time from ACQ Bit Set to ACQC Interrupt Received

Figure 18. Kickback Voltage Measurement Timing

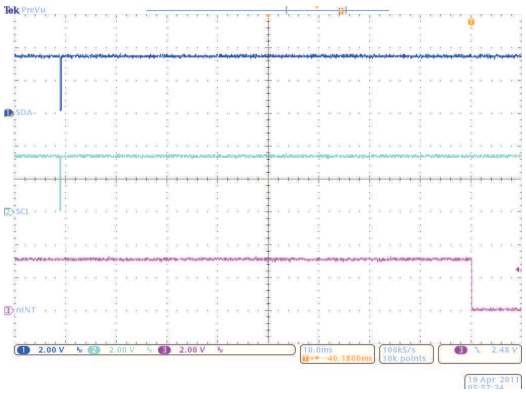

V_{IN} = 3.7 V AVG[1:0] = 11 (Eight Measurements)
Time from ACQ Bit Set to ACQC Interrupt Received

Figure 19. Kickback Voltage Measurement Timing

Copyright © 2011–2017, Texas Instruments Incorporated

8 Detailed Description

8.1 Overview

The TPS65185x device provides two adjustable LDOs, inverting buck-boost converter, boost converter, thermistor monitoring, and flexible power-up and power-down sequencing. The system can be supplied by a regulated input voltage ranging from 3 V to 6 V. The device is characterized across a –10°C to 85°C temperature range, best suited for personal electronic applications.

The I^2C interface provides comprehensive features for using the TPS65185x. All rails can be enabled or disabled. Power-up and power-down sequences can also be programmed through the I^2C interface, as well as thermistor configuration and interrupt configuration. Voltage adjustment can also be controlled by the I^2C interface.

The adjustable LDOs can supply up to 120 mA (TPS65185) and 200 mA (TPS651851) of current. The default output voltages for each LDO can be adjusted through the I^2C interface. LDO1 (VPOS) and LDO2 (VNEG) track each other in a way that they are of opposite sign but same magnitude. The sum of VLDO1 and VLOD2 is specified to be less than 50 mV.

There are two charge pumps: where VDDH and VEE are 10 mA and 12 mA (TPS65185) and VDDH and VEE are 15 mA and 15 mA (TPS651851) respectively. These charge pumps boost the DC-DC boost converters ±16-V rails to provide a gate channel supply.

The power good functionality is open-drain output, if any of the four power rails (CP1, CP2, LDO1, LDO2) are not in regulation, encounters a fault, or is disabled the pin is pulled low. PWR_GOOD remains low if one of the rails is not enabled by the host and only after all rails are in regulation PWR_GOOD is released to HiZ state (pulled up by external resistor).

The TPS65185x provides circuitry to bias and measure an external NTC to monitor the display panel temperature in a range from –10°C to 85°C with and accuracy of ±1°C from 0°C to 50°C. Temperature measurement are triggered by the controlling host and the last temperature reading is always stored in the TMST_VALUE register. Interrupts are issued when the temperature exceeds the programmable HOT, or drops below the programmable COLD threshold, or when the temperature has changed by more than a user-defined threshold from the baseline value.

This device has the following two package options:

- TPS65185: 48-Pin, 0.5-mm Pitch, 7 mm × 7 mm × 0.9 mm (QFN) RGZ
- TPS65185 and TPS651851: 48-Pin, 0.4 mm Pitch, 6 mm × 6 mm × 0.9 mm (QFN) RSL

8.2 Functional Block Diagram

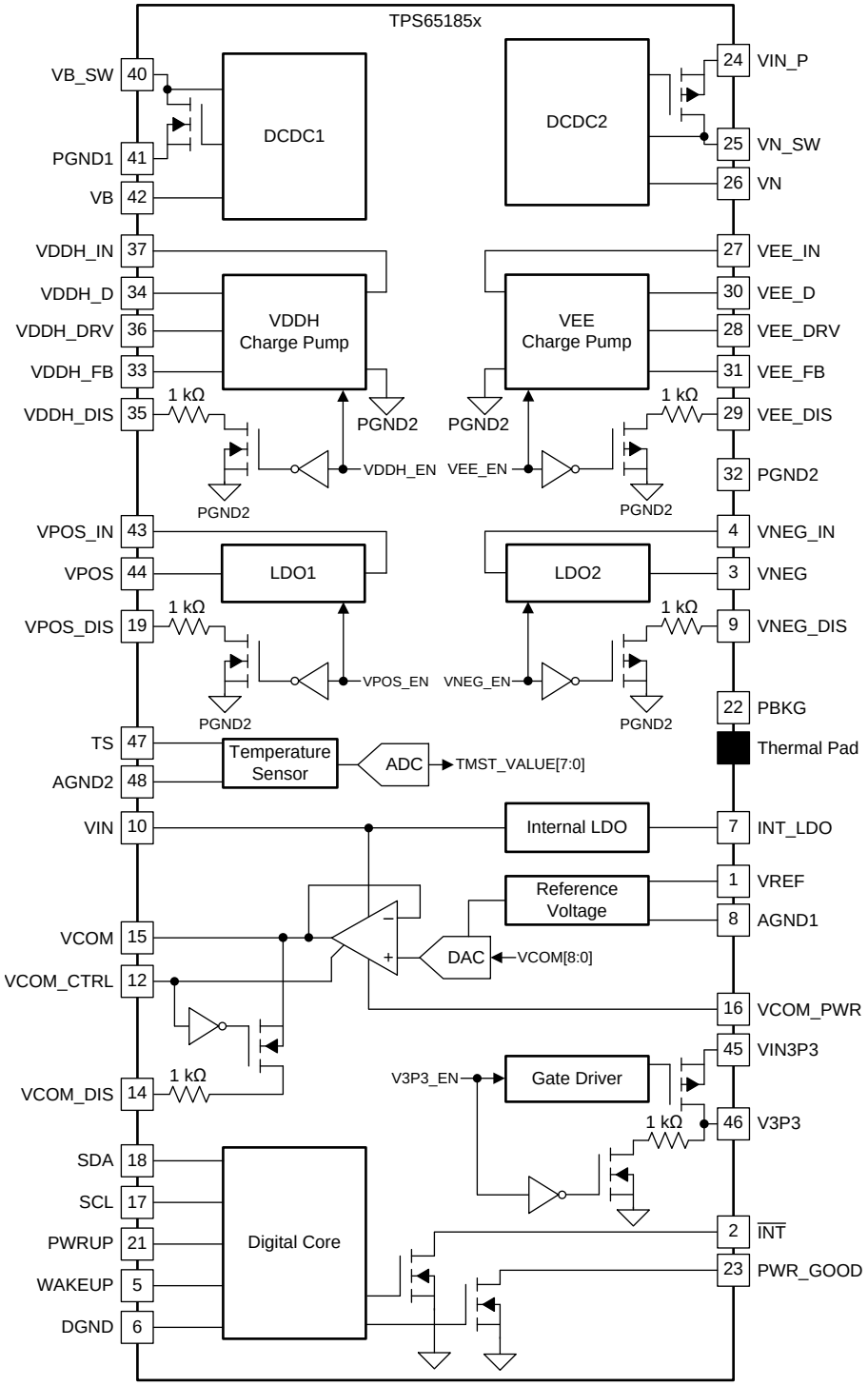

Copyright © 2017, Texas Instruments Incorporated

Copyright © 2011–2017, Texas Instruments Incorporated

8.3 Feature Description

8.3.1 Wake-Up and Power-Up Sequencing

The power-up and power-down order and timing is defined by user register settings. The default settings support the E Ink Vizplex panel and typically do not need to be changed.

In SLEEP mode the TPS65185x is completely turned off, the I^2C registers are reset, and the device does not accept any I^2C transaction. Pull the WAKEUP pin high with the PWRUP pin low and the device enters STANDBY mode which enables the I^2C interface. Write to the UPSEQ0 register to define the order in which the output rails are enabled at power-up and to the UPSEQ1 registers to define the power-up delays between rails. Finally, set the ACTIVE bit in the ENABLE register to 1 to execute the power-up sequence and bring up all power rails. Alternatively pull the PWRUP pin high (rising edge).

After the ACTIVE bit has been set, the negative boost converter (VN) is powered up first, followed by the positive boost (VB). The positive boost enable is gated by the internal power-good signal of the negative boost. Once VB is in regulation, it issues an internal power-good signal and after delay time UDLY1 has expired, STROBE1 is issued. The rail assigned to STROBE1 will power up next and after its power-good signal has been asserted and delay time UDLY2 has expired, STROBE2 is issued. The sequence continues until STROBE4 has occurred and the last rail has been enabled.

To power down the device, set the STANDBY bit of the ENABLE register to 1 or pull the PWRUP pin low (falling edge) and the TPS65185x will power down in the order defined by DWNSEQx registers. The delay times DDLY2, DDLY3, and DDLY4 are weighted by a factor of DFCTR which allows the user to space out the power down of the rails to avoid crossing during discharge. DFCTR is located in register DWNSEQ1. The positive boost (VB) is shut down together with the last rail at STROBE4. However, the negative boost (VN) remains up and running for another 100 ms (discharge delay) to allow complete discharge of all rails. After the discharge delay, VN is powered down and the device enters STANDBY or SLEEP mode, depending on the WAKEUP pin.

If either the ACTIVE bit is set or the PWRUP pin is pulled high while the device is powering down, the power-down sequence (STROBE1-4) is completed first, followed by a power-up sequence. VB and VN may or may not be powered down and the discharge delay may be cut short depending on the relative timing of STROBE4 to the new power-up event.

During power-up, if the STANDBY bit is set or the PWRUP pin is pulled low, the power-up sequence is aborted and the power-down sequence starts immediately.

8.3.2 Dependencies Between Rails

Charge pumps, LDOs, and VCOM driver are dependent on the positive and inverting buck-boost converters and several dependencies exist that affect the power-up sequencing. These dependencies are listed below.

- Inverting buck-boost (DCDC2) must be in regulation before positive boost (DCDC1) can be enabled. Internally, DCDC1 enable is gated by DCDC2 power good.
- Positive boost (DCDC1) must be in regulation before LDO2 (VNEG) can be enabled. Internally LDO2 enable is gated DCDC1 power-good.
- Positive boost (DCDC1) must be in regulation before VCOM can be enabled. Internally VCOM enable is gated by DCDC1 power good.
- Positive boost (DCDC1) must be in regulation before negative charge pump (CP2) can be enabled. Internally CP2 enable is gated by DCDC1 power good.
- Positive boost (DCDC1) must be in regulation before positive charge pump (CP1) can be enabled. Internally CP1 enable is gated by DCDC1 power good.
- LDO2 must be in regulation before LDO1 can be enabled. Internally LDO1 enable is gated by LDO2 power good.

Copyright © 2011–2017, Texas Instruments Incorporated

Feature Description (continued)

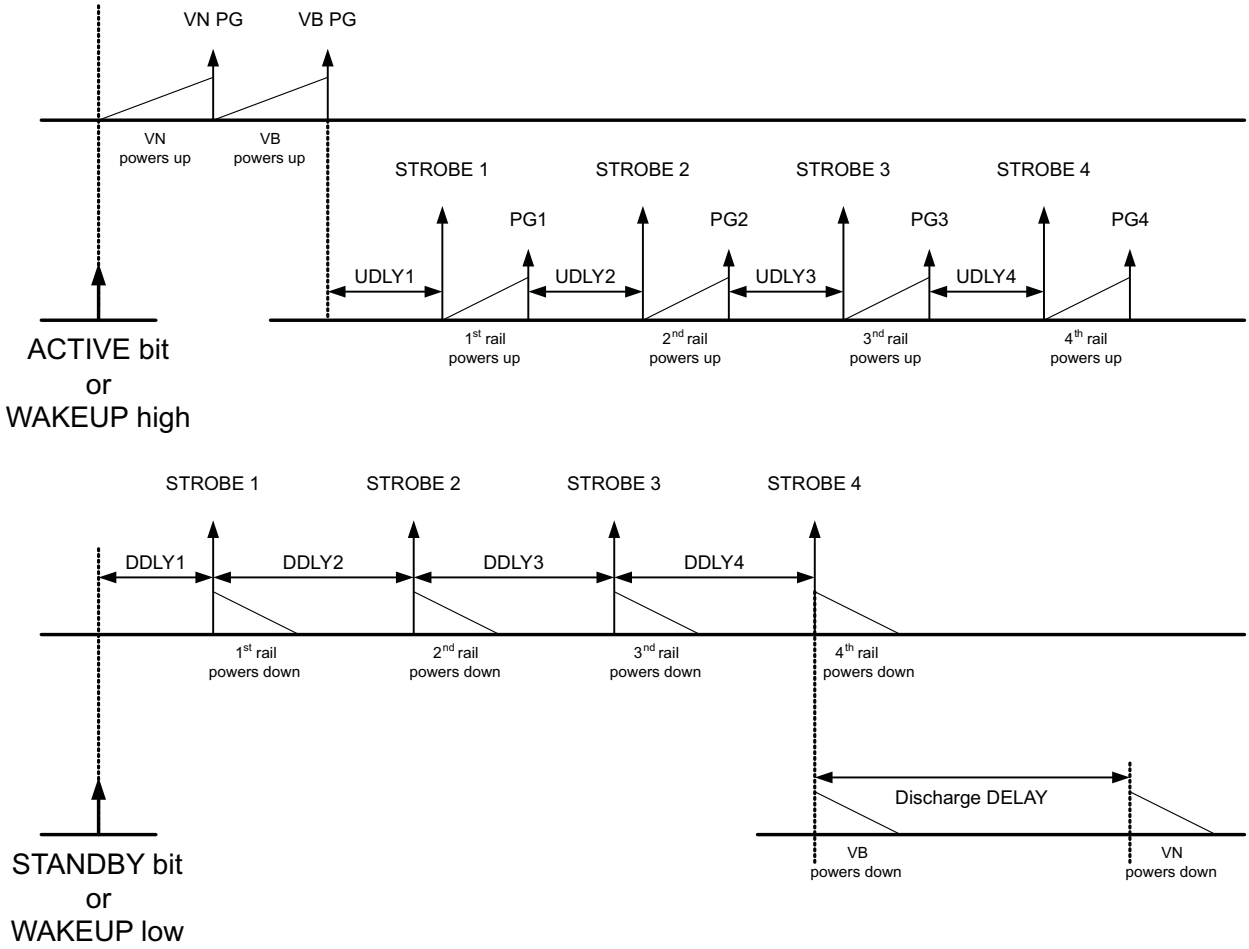

TOP: Power-up sequence is defined by assigning strobes to individual rails. STROBE1 is the first strobe to occur after ACTIVE bit is set and STROBE4 is the last event in the sequence. Strobes are assigned to rails in UPSEQ0 register and delays between STROBES are defined in UPSEQ1 register.

BOTTOM: Power-down sequence is independent of power-up sequence. Strobes and delay times for power down sequence are set in DWNSEQ0 and DWNSEQ1 register.

Figure 20. Power-Up and Power-Down Sequence

8.3.3 Soft Start

TPS65185x supports soft start for all rails, that is, inrush current is limited during startup of DCDC1, DCDC2, LDO1, LDO2, CP1 and CP2. If DCDC1 or DCDC2 are unable to reach power-good status within 50 ms, the corresponding UV flag is set in the interrupt registers, the interrupt pin is pulled low, and the device enters STANDBY mode. LDO1, LDO2, positive and negative charge pumps also have a 50-ms power-good time-out limit. If either rail is unable to power up within 50 ms after it has been enabled, the corresponding UV flag is set and the interrupt pin is pulled low. However, the device will remain in ACTIVE mode in this case.

8.3.4 Active Discharge

TPS65185x provides low-impedance discharge paths for the display power rails (VEE, VNEG, VPOS, VDDH, and VCOM) which are enabled whenever the corresponding rail is disabled. The discharge paths are connected to the rails on the PCB which allows adding external resistors to customize the discharge time. However, external resistors are not required.

Copyright © 2011–2017, Texas Instruments Incorporated

Feature Description (continued)

Active discharge remains enabled for 100 ms after the last rail has been disabled (STROBE4 has been executed). During this time the negative boost converter (VN) remains up. After the discharge delay, VN is shut down and the device enters STANDBY or SLEEP mode, depending on the state of the WAKEUP pin.

8.3.5 VPOS/VNEG Supply Tracking

LDO1 (VPOS) and LDO2 (VNEG) track each other in a way that they are of opposite sign but same magnitude. The sum of VLDO1 and VLOD2 is specified to be < 50 mV.

8.3.6 V3P3 Power Switch

The integrated power switch is used to cut the 3.3-V supply to the EPD panel and is controlled through the V3P3_EN pin of the ENABLE register. In SLEEP mode the switch is automatically turned off and its output is discharged to ground. The default power-up state is OFF. To turn the switch ON, set the V3P3_ENbit to 1.

8.3.7 VCOM Adjustment

VCOM is the output of a power-amplifier with an output voltage range of 0 V to –5.11 V, adjustable in 10-mV steps. In a typical application VCOM is connected to the VCOM terminal of the EPD panel and the amplifier is controlled through the VCOM_CTRL pin. With VCOM_CTRL high, the amplifier drives the VCOM pin to the voltage specified by the VCOM1 and VCOM2 register. When pulled low, the amplifier turns off and VCOM is actively discharged to ground through VCOM_DIS pin. If active discharge is not desired, simply leave the VCOM_DIS pin open.

For ease of design, the VCOM_CTRL pin may also be tied to the battery or IO supply. In this case, VCOM is enabled with STROBE4 during the power-up sequence and disabled on STROBE1 of the power-down sequence. Therefore VCOM is the last rail to be enabled and the first to be disabled.

8.3.7.1 Kick-Back Voltage Measurement

TPS65185x can perform a voltage measurement on the VCOM pin to determine the kick-back voltage of the panel. This allows in-system calibration of VCOM. To perform a kick-back voltage measurement, follow these steps:

- Pull the WAKEUP pin and the PWRUP pin high to enable all output rails.
- Set the HiZ bit in the VCOM2 register. This puts the VCOM pin in a high-impedance state.
- Drive the panel with the Null waveform. Refer to E-Ink specification for detail.
- Set the ACQ bit in the VCOM2 register to 1. This starts the measurement routine.
- When the measurement is complete, the ACQC (Acquisition Complete) bit in the INT1 register is set and the nINT pin is pulled low.
- The measurement result is stored in the VCOM[8:0] bits of the VCOM1 and VCOM2 register.

The measurement result is not automatically programmed into nonvolatile memory. Changing the power-up default is described in the following paragraph.

Feature Description (continued)

8.3.7.2 Storing the VCOM Power-Up Default Value in Memory

The power-up default value of VCOM can be user-set and programmed into nonvolatile memory. To do so, write the default value to the VCOM[8:0] bits of the VCOM1 and VCOM2 register, then set the PROG bit in VCOM2 register to 1. First, all power rails are shut down, then the VCOM[8:0] value is committed to nonvolatile memory such that it becomes the new power-up default. Once programming is complete, the PRGC bit in the INT1 register is set and the nINT pin is pulled low. To verify that the new value has been saved properly, first write the VCOM[8:0] bits to 0x000h, then pull the WAKEUP pin low. After the WAKEUP pin is pulled back high, read the VCOM[8:0] bits to verify that the new default value is correct.

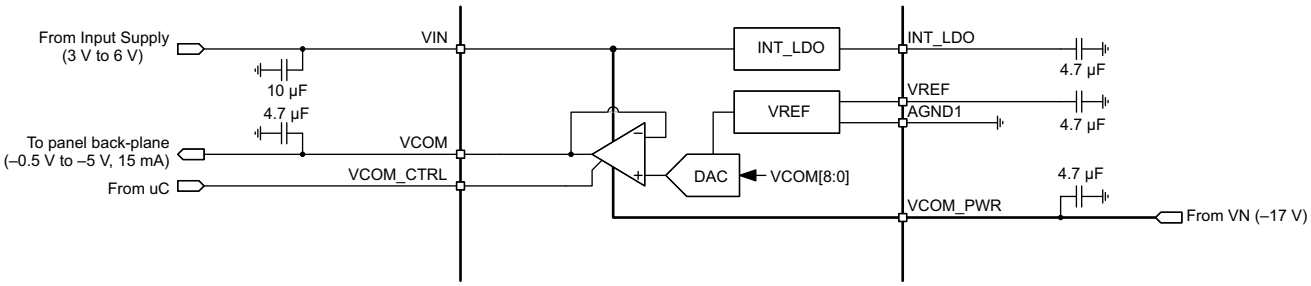

Figure 21. Block Diagram of VCOM Circuit

Copyright © 2011–2017, Texas Instruments Incorporated

Feature Description (continued)

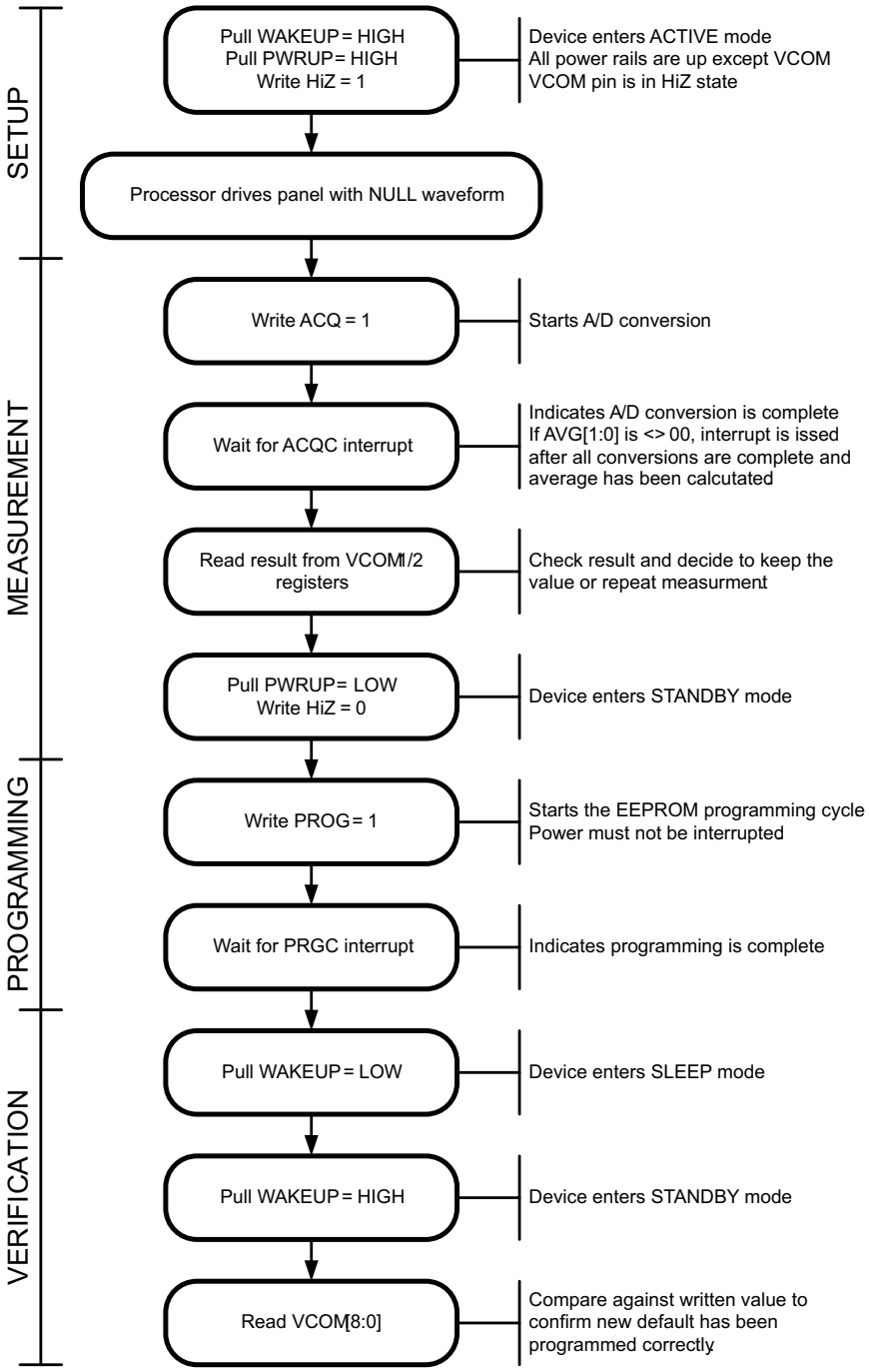

Figure 22. VCOM Calibration Flow

Feature Description (continued)

8.3.8 Fault Handling And Recovery

The TPS65185x monitors input/output voltages and die temperature. The device will take action if operating conditions are outside normal limits when the following is encountered:

- Thermal Shutdown (TSD)
- Positive Boost Under Voltage (VB_UV)
- Inverting Buck-Boost Under Voltage (VN_UV)
- Input Undervoltage Lockout (UVLO)

it shuts down all power rails and enters STANDBY mode. Shut-down follows the order defined by DWNSEQx registers. The exception is VCOM fault witch leads to immediate shutdown of all rails. Once a fault is detected, the PWR_GOOD and nINT pins are pulled low and the corresponding interrupt bit is set in the interrupt register. Power rails cannot be re-enabled unless the interrupt bits have been cleared by reading the INT1 and INT2 register. Alternatively, toggling the WAKEUP pin also resets the interrupt bits. As the PWRUP input is edge sensitive, the host must toggle the PWRUP pin to re-enable the rails through GPIO control, i.e. it must bring the PWRUP pin low before asserting it again. Alternatively rails can be re-enabled through the I^2C interface.

Whenever the TPS65185x encounters undervoltage on VNEG (VNEG_UV), VPOS (VPOS_UV), VEE (VEE_UV) or VDDH (VDDH_UV), rails are not shut down but the PWR_GOOD and nINT is pulled low with the corresponding interrupt bit set. The device remains in ACTIVE mode and recovers automatically once the fault has been removed.

8.3.9 Power Good Pin

The power good pin (PWR_GOOD) is an open-drain output that is pulled high (by an external pullup resistor) when all four power rails (CP1, CP2, LDO1, LDO2) are in regulation and is pulled low if any of the rails encounters a fault or is disabled. PWR_GOOD remains low if one of the rails is not enabled by the host and only after all rails are in regulation PWR_GOOD is released to HiZ state (pulled up by external resistor).

8.3.10 Interrupt Pin

The interrupt pin (nINT) is an open drain output that is pulled low whenever one or more of the INT1 or INT2 bits are set. The nINT pin is released (returns to HiZ state) and fault bits are cleared once the register with the set bit has been read by the host. If the fault persists, the nINT pin will be pulled low again after a maximum of 32 µs.

Interrupt events can be masked by resetting the corresponding enable bit in the INT_EN1 and INT_EN2 register, that is, the user can determine which events cause the nINT pin to be pulled low. The status of the enable bits affects the nINT pin only and has no effect on any of the protection and monitoring circuits or the INT1/INT2 bits themselves.

Persisting faults such as thermal shutdown can cause the nINT pin to be pulled low for an extended period of time which can keep the host in a loop trying to resolve the interrupt. If this behavior is not desired, set the corresponding mask bit after receiving the interrupt and keep polling the INT1 and INT2 register to see when the fault condition has disappeared. After the fault is resolved, unmask the interrupt bit again.

8.3.11 Panel Temperature Monitoring

The TPS65185x provides circuitry to bias and measure an external Negative Temperature Coefficient Resistor (NTC) to monitor the display panel temperature in a range from –10°C to 85°C with and accuracy of ±1°C from 0°C to 50°C. Temperature measurement must be triggered by the controlling host and the last temperature reading is always stored in the TMST_VALUE register. Interrupts are issued when the temperature exceeds the programmable HOT, or drops below the programmable COLD threshold, or when the temperature has changed by more than a user-defined threshold from the baseline value. Details are explained in *Hot, Cold, and Temperature-Change Interrupts*.

Copyright © 2011–2017, Texas Instruments Incorporated

Feature Description (continued)

8.3.11.1 NTC Bias Circuit

Figure 23 below shows the block diagram of the NTC bias and measurement circuit. The NTC is biased from an internally generated 2.25-V reference voltage through an integrated 7.307-kΩ bias resistor. A 43-kΩ resistor is connected parallel to the NTC to linearize the temperature response curve. The circuit is designed to work with a nominal 10-kΩ NTC and achieves accuracy of ±1°C from 0°C to 50°C. The voltage drop across the NTC is digitized by a 10-bit SAR ADC and translated into an 8-bit two's complement by digital per Table 1.

Table 1. ADC Output Value vs Temperature

TEMPERATURE	TMST_VALUE[7:0]
< –10°C	1111 0110
–10°C	1111 0110
–9°C	1111 0111
...	...
–2°C	1111 1110
–1°C	1111 1111
0°C	0000 0000
1°C	0000 0001
2°C	0000 0010
...	...
25°C	0001 1001
...	
85°C	0101 0101
> 85°C	0101 0101

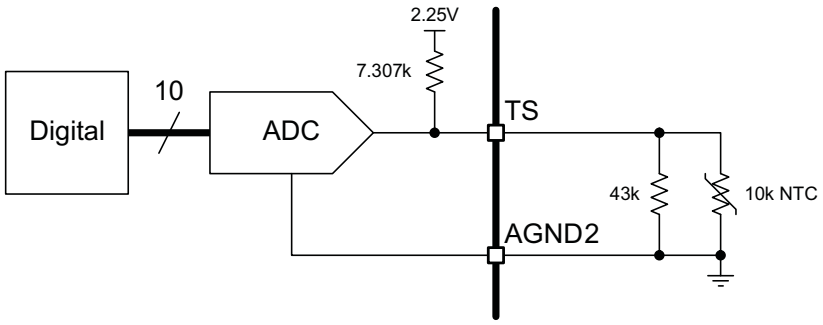

Figure 23. NTC Bias and Measurement Circuit

A temperature measurement is triggered by setting the READ_THERM bit of the TMST1 register to 1.During the A/D conversion the CONV_END bit of the TMST1 register reads 0, otherwise it reads 1. At the end of the A/D conversion the EOC bit in the INT2 register is set and the temperature value is available in the TMST_VALUE register.

8.3.11.2 Hot, Cold, and Temperature-Change Interrupts

Each temperature acquisition is compared against the programmable TMST_HOT and TMST_COLD thresholds and to the baseline temperature, to determine if the display is within allowed operating temperature range and if the temperature has changed by more than a user-defined threshold since the last update. The first temperature reading after the WAKEUP pin has been pulled high automatically becomes the baseline temperature. Any subsequent reading is compared against the baseline temperature. If the difference is equal or greater than the threshold value, an interrupt is issued (DTX bit in register INT1 is set to 1) and the latest value becomes the new baseline. If the difference is less than the threshold value, no action is taken. The threshold value is defined by DT[1:0] bits in the TMST1 register and has a default value of ±2°C. In summary:

- When the temperature is equal or less than the TMST_COLD[3:0] threshold, the TMST_COLD interrupt bit of the INT1 register is set, and the nINT pin is pulled low.
- When the temperature is greater than TMST_COLD but lower then TMST_HOT, no action is taken.
- When the temperature is equal or greater than the TMST_HOT[3:0] threshold, the TMST_HOT interrupt bit of the INT1 register is set, and the nINT pin is pulled low.
- If the last temperature is different from the baseline temperature by ±2°C (default) or more, the DTX interrupt bit of the INT1 register is set. The latest temperature becomes the new baseline temperature. By default the DTX interrupt is disabled, that is, the nINT pin is not pulled low unless the DTX_EN bit was previously set high.
- If the last temperature change is less than ±2°C (default), no action is taken.

8.3.11.3 Typical Application of the Temperature Monitor

In a typical application the temperature monitor and interrupts are used in the following manner:

- After the WAKEUP pin has been pulled high, the Application Processor (AP) writes 0x80h to the TMST1 register (address 0x0Dh). This starts the temperature measurement.
- The AP waits for the EOC interrupt. Alternatively the AP can poll the CONV_END bit in register TMST1. This will notify the AP that the A/D conversion is complete and the new temperature reading is available in the TMST_VALUE register (address (0x00h).
- The AP reads the temperature value from the TMST_VALUE register (address (0x00h).
- If the temperature changes by ±2°C (default) or more from the first reading, the processor is notified by the DTX interrupt. The A/P may or may not decide to select a different set of wave forms to drive the panel.
- If the temperature is outside the allowed operating range of the panel, the processor is notified by the THOT and TCOLD interrupts, respectively. It may or may not decide to continue with the page update.
- Once an overtemperature or undertemperature has been detected, the AP must reset the TMST_HOT_EN or TMST_COLD_EN bits, respectively, to avoid the nINT pin to be continuously pulled low. The TMST_HOT and TMST_COLD interrupt bits then must be polled continuously, to determine when the panel temperature recovers to the normal operating range. Once the temperature has recovered, the TMST_HOT_EN or TMST_COLD_EN bits must be set to 1 again and normal operation can resume.

Copyright © 2011–2017, Texas Instruments Incorporated

8.4 Device Functional Modes

The TPS65185x has three modes of operation, SLEEP, STANDBY, and ACTIVE. SLEEP mode is the lowest-power mode in which all internal circuitry is turned off. In STANDBY, all power rails are shut down but the device is ready to accept commands through the I^2C interface. In ACTIVE mode one or more power rails are enabled.

8.4.1 SLEEP

This is the lowest power mode of operation. All internal circuitry is turned off, registers are reset to default values and the device does not respond to I^2C communications. TPS65185x enters SLEEP mode whenever WAKEUP pin is pulled low.

8.4.2 STANDBY

In STANDBY all internal support circuitry is powered up and the device is ready to accept commands through the I^2C interface but none of the power rails are enabled. The device enters STANDBY mode when the WAKEUP pin is pulled high and either the PWRUP pin is pulled low or the STANDBY bit is set. The device also enters STANDBY mode if input UVLO, positive boost undervoltage (VB_UV), or inverting buck-boost undervoltage (VN_UV) is detected, thermal shutdown occurs, or the PROG bit is set (see Figure 22).

8.4.3 ACTIVE

The device is in ACTIVE mode when any of the output rails are enabled and no fault condition is present. This is the normal mode of operation while the device is powered up.

8.4.4 Mode Transitions

8.4.4.1 SLEEP → ACTIVE

WAKEUP pin is pulled high with PWRUP pin high. Rails come up in the order defined by the UPSEQx registers (OK to tie WAKEUP and PWRUP pin together).

8.4.4.2 SLEEP → STANDBY

WAKEUP pin is pulled high with PWRUP pin low. Rails will remain powered down.

8.4.4.3 STANDBY → ACTIVE

WAKEUP pin is high and PWRRUP pin is pulled high (rising edge) or the ACTIVE bit is set. Output rails will power up in the order defined by the UPSEQx registers.

8.4.4.4 ACTIVE → STANDBY

WAKEUP pin is high and STANDBY bit is set or PWRUP pin is pulled low (falling edge). Rails are shut down in the order defined by DWNSEQx registers. Device also enters STANDBY in the event of thermal shutdown (TSD), UVLO, positive boost or inverting buck-boost undervoltage (UV), VCOM fault (VCOMF), or when the PROG bit is set (see Figure 22).

8.4.4.5 STANDBY → SLEEP

WAKEUP pin is pulled low while none of the output rails are enabled.

8.4.4.6 ACTIVE → SLEEP

WAKEUP pin is pulled low while at least one output rail is enabled. Rails are shut down in the order defined by DWNSEQx registers.

Copyright © 2011–2017, Texas Instruments Incorporated

Device Functional Modes (continued)

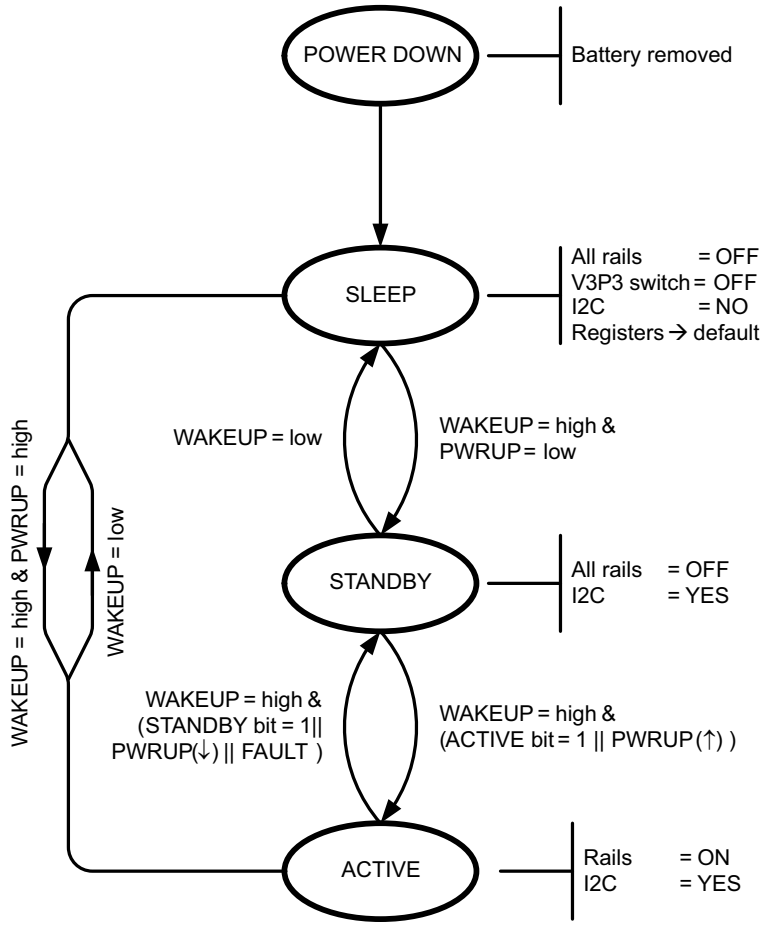

NOTES:

||, & = logic OR, and AND.

(↑), (↓) = rising edge, falling edge

UVLO = Undervoltage Lockout

TSD = Thermal Shutdown

UV = Undervoltage

FAULT = UVLO || TSD || BOOST UV || VCOM fault

Figure 24. Global State Diagram

Copyright © 2011–2017, Texas Instruments Incorporated

8.5 Programming

8.5.1 I²C Bus Operation

The TPS65185x hosts a slave I²C interface that supports data rates up to 400 kbit/s and auto-increment addressing and is compliant to I²C standard 3.0.

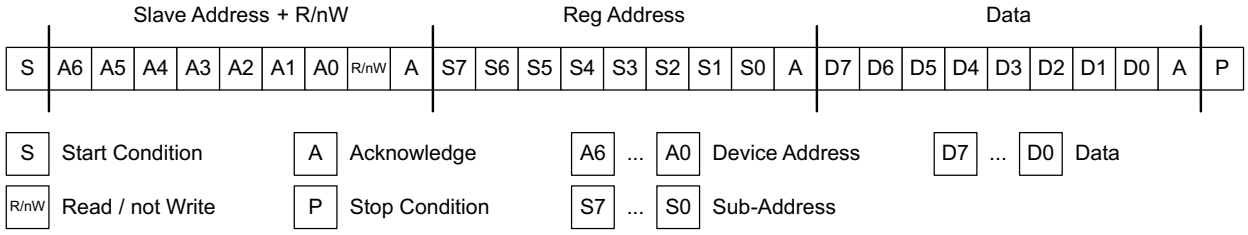

Figure 25. Subaddress in I²C Transmission

The I²C Bus is a communications link between a controller and a series of slave terminals. The link is established using a two-wire bus consisting of a serial clock signal (SCL) and a serial data signal (SDA). The serial clock is sourced from the controller in all cases where the serial data line is bi-directional for data communication between the controller and the slave terminals. Each device has an open drain output to transmit data on the serial data line. An external pullup resistor must be placed on the serial data line to pull the drain output high during data transmission.

Data transmission is initiated with a start bit from the controller as shown in Figure 27. The start condition is recognized when the SDA line transitions from high to low during the high portion of the SCL signal. Upon reception of a start bit, the device will receive serial data on the SDA input and check for valid address and control information. If the appropriate slave address bits are set for the device, then the device will issue an acknowledge pulse and prepare to receive the register address. Depending on the R/nW bit, the next byte received from the master is written to the addressed register (R/nW = 0) or the device responds with 8-bit data from the register (R/nW = 1). Data transmission is completed by either the reception of a stop condition or the reception of the data word sent to the device. A stop condition is recognized as a low to high transition of the SDA input during the high portion of the SCL signal. All other transitions of the SDA line must occur during the low portion of the SCL signal. An acknowledge is issued after the reception of valid address, sub-address, and data words. The I²C interfaces will auto-sequence through register addresses, so that multiple data words can be sent for a given I²C transmission. See Figure 26 and Figure 27 for details.

Programming (continued)

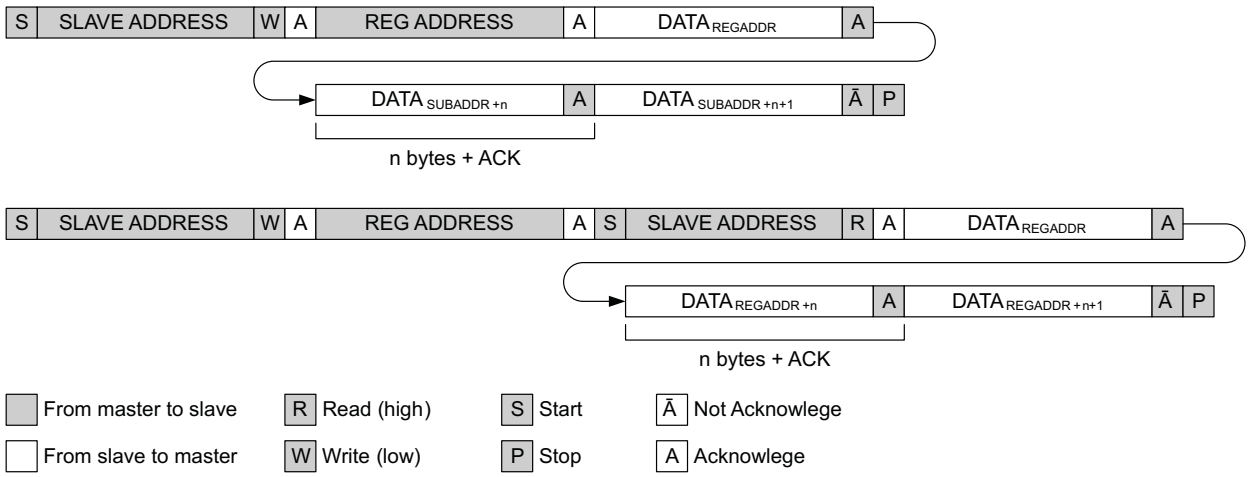

TOP: Master writes data to slave.

BOTTOM: Master reads data from slave.

Figure 26. I²C Data Protocol

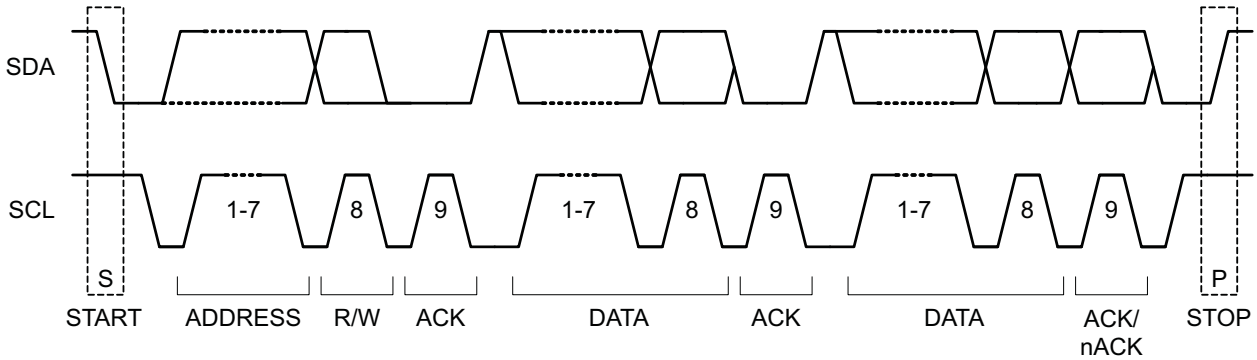

Figure 27. I²C Start/Stop/Acknowledge Protocol

Copyright © 2011–2017, Texas Instruments Incorporated

8.6 Register Maps

Table 2. Register Address Map

Address	Acronym	Register Name	Section
0x00h	TMST_VALUE	Thermistor value read by ADC	Go
0x01h	ENABLE	Enable/disable bits for regulators	Go
0x02h	VADJ	VPOS/VNEG voltage adjustment	Go
0x03h	VCOM1	Voltage settings for VCOM	Go
0x04h	VCOM2	Voltage settings for VCOM + control	Go
0x05h	INT_EN1	Interrupt enable group1	Go
0x06h	INT_EN2	Interrupt enable group2	Go
0x07h	INT1	Interrupt group1	Go
0x08h	INT2	Interrupt group2	Go
0x09h	UPSEQ0	Power-up strobe assignment	Go
0x0Ah	UPSEQ1	Power-up sequence delay times	Go
0x0Bh	DWNSEQ0	Power-down strobe assignment	Go
0x0Ch	DWNSEQ1	Power-down sequence delay times	Go
0x0Dh	TMST1	Thermistor configuration	Go
0x0Eh	TMST2	Thermistor hot temp set	Go
0x0Fh	PG	Power good status each rails	Go
0x10h	REVID	Device revision ID information	Go

8.6.1 Thermistor Readout (TMST_VALUE) Register (address = 0x00h) [reset = N/A]

Figure 28. TMST_VALUE Register

7	6	5	4	3	2	1	0
TMST_VALUE[7:0]							
R-N/A							

LEGEND: R/W = Read/Write; R = Read only; -n = value after reset

Table 3. TMST_VALUE Register Field Descriptions

Bit	Field	Type	Reset	Description
7-0	TMST_VALUE	R	N/A	Temperature read-out F6h = < –10°C F7h = –9°C ... FEh = –2°C FFh = –1°C 0h = 0°C 1h = 1°C 2h = 2°C ... 19h = 25°C ... 55h = > 85°C

8.6.2 Enable (ENABLE) Register (address = 0x01h) [reset = 0h]

Figure 29. ENABLE Register

7	6	5	4	3	2	1	0
ACTIVE	STANDBY	V3P3_EN	VCOM_EN	VDDH_EN	VPOS_EN	VEE_EN	VNEG_EN
R/W-0h	R/W-0h	R/W-0h	R/W-0h	R/W-0h	R/W-0h	R/W-0h	R/W-0h

LEGEND: R/W = Read/Write; R = Read only; -n = value after reset

Table 4. ENABLE Register Field Descriptions

Bit	Field	Type	Reset	Description
7	ACTIVE	R/W	0h	STANDBY to ACTIVE transition bit 0h = no effect 1h = Transition from STANDBY to ACTIVE mode. Rails power up as defined by UPSEQx registers NOTE: After transition bit is cleared automatically
6	STANDBY	R/W	0h	STANDBY to ACTIVE transition bit 0h = no effect 1h = Transition from STANDBY to ACTIVE mode. Rails power up as defined by DWNSEQx registers NOTE: After transition bit is cleared automatically. STANDBY bit has priority over ACTIVE.
5	V3P3_EN	R/W	0h	VIN3P3 to V3P3 switch enable 0h = Switch is OFF 1h = Switch is ON
4	VCOM_EN	R/W	0h	VCOM buffer enable 0h = Disabled 1h = Enabled
3	VDDH_EN	R/W	0h	VDDH charge pump enable 0h = Disabled 1h = Enabled
2	VPOS_EN	R/W	0h	VPOS LDO regulator enable 0h = Disabled 1h = Enabled NOTE: VPOS cannot be enabled before VNEG is enabled.
1	VEE_EN	R/W	0h	VEE charge pump enable 0h = Disabled 1h = Enabled
0	VNEG_EN	R/W	0h	VNEG LDO regulator enable 0h = Disabled 1h = Enabled NOTE: When VNEG is disabled VPOS will also be disabled.

Copyright © 2011–2017, Texas Instruments Incorporated

8.6.3 Voltage Adjustment (VADJ) Register (address = 0x02h) [reset = 23h]

Figure 30. VADJ Register

7	6	5	4	3	2	1	0
Not used	Not used	Not used	Not used	Not used	VSET[2:0]		
R/W-0h	R/W-0h	R/W-1h	R/W-0h	R-0h	R/W-3h		

LEGEND: R/W = Read/Write; R = Read only; -n = value after reset

Table 5. VADJ Register Field Descriptions

Bit	Field	Type	Reset	Description
7	Not used	R/W	0h	N/A
6	Not used	R/W	0h	N/A
5	Not used	R/W	1h	N/A
4	Not used	R/W	0h	N/A
3	Not used	R	0h	N/A
2-0	VSET	R/W	3h	VPOS and VNEG voltage setting 0h = not valid 1h = not valid 2h = not valid 3h = ±15.000 V 4h = ±14.750 V 5h = ±14.500 V 6h = ±14.250 V 7h = reserved

8.6.4 VCOM 1 (VCOM1) Register (address = 0x03h) [reset = 7Dh]

Figure 31. VCOM1 Register

7	6	5	4	3	2	1	0
VCOM[7:0]							
R/W-7Dh							

LEGEND: R/W = Read/Write; R = Read only; -n = value after reset

Table 6. VCOM1 Register Field Descriptions

Bit	Field	Type	Reset	Description
7-0	VCOM	R/W	7Dh	VCOM voltage, least significant byte. See *VCOM 2 (VCOM2) Register (address = 0x04h) [reset = 04h]* for details.

Copyright © 2011–2017, Texas Instruments Incorporated

8.6.5 VCOM 2 (VCOM2) Register (address = 0x04h) [reset = 04h]

Figure 32. VCOM2 Register

7	6	5	4	3	2	1	0
ACQ	PROG	HiZ	AVG[1:0]		Not used	Not used	VCOM[8]
R/W-0h	R/W-0h	R/W-0h	R/W-0h		R/W-1h	R/W-0h	R/W-0h

LEGEND: R/W = Read/Write; R = Read only; -n = value after reset

Table 7. VCOM2 Register Field Descriptions

Bit	Field	Type	Reset	Description
7	ACQ	R/W	0h	Kick-back voltage acquisition bit 0h = No effect 1h = Starts kick-back voltage measurement routine NOTE: After measurement is complete bit is cleared automatically and measurement result is reflected in VCOM[8:0] bits.
6	PROG	R/W	0h	VCOM programming bit 0h = No effect 1h = VCOM[8:0] value is committed to nonvolatile memory and becomes new power-up default NOTE: After programming bit is cleared automatically and TPS65185x will enter STANDBY mode.
5	HiZ	R/W	0h	VCOM HiZ bit 1h = VCOM pin is placed into hi-impedance state to allow VCOM measurement 0h = VCOM amplifier is connected to VCOM pin
4-3	AVG	R/W	0h	Number of acquisitions that is averaged to a single kick-back voltage measurement 0h = 1x 1h = 2x 2h = 4x 3h = 8x NOTE: When the ACQ bit is set, the state machine repeat the A/D conversion of the kick-back voltage AVD[1:0] times and returns a single, averaged, value to VCOM[8:0]
2	Not used	R/W	1h	N/A
1	Not used	R/W	0h	N/A
0	VCOM	R/W	0h	VCOM voltage adjustment VCOM = VCOM[8:0] x –10 mV in the range from 0 mV to –5.110 V 0h = –0 mV 1h = –10 mV 2h = –20 mV ... 7Dh = –1250 mV ... 1FEh = –5100 mV 1FFh = –5110 mV

8.6.6 Interrupt Enable 1 (INT_EN1) Register (address = 0x05h) [reset = 7Fh]

Figure 33. INT_EN1 Register

7	6	5	4	3	2	1	0
DTX_EN	TSD_EN	HOT_EN	TMST_HOT_EN	TMST_COLD_EN	UVLO_EN	ACQC_EN	PRGC_EN
R-0h	R/W-1h	R/W-1h	R/W-1h	R/W-1h	R/W-1h	R-1h	R-1h

LEGEND: R/W = Read/Write; R = Read only; -n = value after reset

Table 8. INT_EN1 Register Field Descriptions

Bit	Field	Type	Reset	Description
7	DTX_EN	R	0h	Panel temperature-change interrupt enable 0h = Disabled 1h = Enabled NOTE: Enabled means nINT pin is pulled low when interrupt occurs. Disabled means nINT pin is not pulled low when interrupt occurs.
6	TSD_EN	R/W	1h	Thermal shutdown interrupt enable 0h = Disabled 1h = Enabled NOTE: Enabled means nINT pin is pulled low when interrupt occurs. Disabled means nINT pin is not pulled low when interrupt occurs.
5	HOT_EN	R/W	1h	Thermal shutdown early warning enable 0h = Disabled 1h = Enabled NOTE: Enabled means nINT pin is pulled low when interrupt occurs. Disabled means nINT pin is not pulled low when interrupt occurs.
4	TMST_HOT_EN	R/W	1h	Thermistor hot interrupt enable 0h = Disabled 1h = Enabled NOTE: Enabled means nINT pin is pulled low when interrupt occurs. Disabled means nINT pin is not pulled low when interrupt occurs.
3	TMST_COLD_EN	R/W	1h	Thermistor cold interrupt enable 0h = Disabled 1h = Enabled NOTE: Enabled means nINT pin is pulled low when interrupt occurs. Disabled means nINT pin is not pulled low when interrupt occurs.
2	UVLO_EN	R/W	1h	VIN under voltage detect interrupt enable 0h = Disabled 1h = Enabled NOTE: Enabled means nINT pin is pulled low when interrupt occurs. Disabled means nINT pin is not pulled low when interrupt occurs.
1	ACQC_EN	R	1h	VCOM acquisition complete interrupt enable 0h = Disabled 1h = Enabled NOTE: Enabled means nINT pin is pulled low when interrupt occurs. Disabled means nINT pin is not pulled low when interrupt occurs.

Copyright © 2011–2017, Texas Instruments Incorporated

Table 8. INT_EN1 Register Field Descriptions (continued)

Bit	Field	Type	Reset	Description
0	PRGC_EN	R	1h	VCOM programming complete interrupt enable 0h = Disabled 1h = Enabled NOTE: Enabled means nINT pin is pulled low when interrupt occurs. Disabled means nINT pin is not pulled low when interrupt occurs.

8.6.7 Interrupt Enable 2 (INT_EN2) Register (address = 0x06h) [reset = FFh]

Figure 34. INT_EN2 Register

7	6	5	4	3	2	1	0
VBUVEN	VDDHUVEN	VNUV_EN	VPOSUVEN	VEEUVEN	VCOMFEN	VNEGUVEN	EOCEN
R/W-1h	R/W-1h	R/W-1h	R/W-1h	R/W-1h	R/W-1h	R/W-1h	R/W-1h

LEGEND: R/W = Read/Write; R = Read only; -n = value after reset

Table 9. INT_EN2 Register Field Descriptions

Bit	Field	Type	Reset	Description
7	VBUVEN	R/W	1h	Positive boost converter under voltage detect interrupt enable 0h = Disabled 1h = Enabled NOTE: Enabled means nINT pin is pulled low when interrupt occurs. Disabled means nINT pin is not pulled low when interrupt occurs.
6	VDDHUVEN	R/W	1h	VDDH under voltage detect interrupt enable 0h = Disabled 1h = Enabled NOTE: Enabled means nINT pin is pulled low when interrupt occurs. Disabled means nINT pin is not pulled low when interrupt occurs.
5	VNUV_EN	R/W	1h	Inverting buck-boost converter under voltage detect interrupt enable 0h = Disabled 1h = Enabled NOTE: Enabled means nINT pin is pulled low when interrupt occurs. Disabled means nINT pin is not pulled low when interrupt occurs.
4	VPOSUVEN	R/W	1h	VPOS under voltage detect interrupt enable 0h = Disabled 1h = Enabled NOTE: Enabled means nINT pin is pulled low when interrupt occurs. Disabled means nINT pin is not pulled low when interrupt occurs.
3	VEEUVEN	R/W	1h	VEE under voltage detect interrupt enable 0h = Disabled 1h = Enabled NOTE: Enabled means nINT pin is pulled low when interrupt occurs. Disabled means nINT pin is not pulled low when interrupt occurs.
2	VCOMFEN	R/W	1h	VCOM FAULT interrupt enable 0h = Disabled 1h = Enabled NOTE: Enabled means nINT pin is pulled low when interrupt occurs. Disabled means nINT pin is not pulled low when interrupt occurs.
1	VNEGUVEN	R/W	1h	VNEG under voltage detect interrupt enable 0h = Disabled 1h = Enabled NOTE: Enabled means nINT pin is pulled low when interrupt occurs. Disabled means nINT pin is not pulled low when interrupt occurs.

Copyright © 2011–2017, Texas Instruments Incorporated

Table 9. INT_EN2 Register Field Descriptions (continued)

Bit	Field	Type	Reset	Description
0	EOCEN	R/W	1h	Temperature ADC end of conversion interrupt enable 0h = Disabled 1h = Enabled NOTE: Enabled means nINT pin is pulled low when interrupt occurs. Disabled means nINT pin is not pulled low when interrupt occurs.

8.6.8 Interrupt 1 (INT1) Register (address = 0x07h) [reset = 0h]

Figure 35. INT1 Register

7	6	5	4	3	2	1	0
DTX	TSD	HOT	TMST_HOT	TMST_COLD	UVLO	ACQC	PRGC
R-0h	R-N/A	R-N/A	R-N/A	R-N/A	R-N/A	R-0h	R-0h

LEGEND: R/W = Read/Write; R = Read only; -n = value after reset

Table 10. INT1 Register Field Descriptions

Bit	Field	Type	Reset	Description
7	DTX	R	0h	Panel temperature-change interrupt 0h = No significance 1h = Temperature has changed by 3 deg or more over previous reading
6	TSD	R	N/A	Thermal shutdown interrupt 0h = No fault 1h = Chip is in over-temperature shutdown
5	HOT	R	N/A	Thermal shutdown early warning 0h = No fault 1h = Chip is approaching over-temperature shutdown
4	TMST_HOT	R	N/A	Thermistor hot interrupt 0h = No fault 1h = Thermistor temperature is equal or greater than TMST_HOT threshold
3	TMST_COLD	R	N/A	Thermistor cold interrupt 0h = No fault 1h = Thermistor temperature is equal or less than TMST_COLD threshold
2	UVLO	R	N/A	VIN under voltage detect interrupt 0h = No fault 1h = Input voltage is below UVLO threshold
1	ACQC	R	0h	VCOM acquisition complete 0h = No significance 1h = VCOM measurement is complete
0	PRGC	R	0h	VCOM programming complete 0h = No significance 1h = VCOM programming is complete

Copyright © 2011–2017, Texas Instruments Incorporated

8.6.9 Interrupt 2 (INT2) Register (address = 0x08h) [reset = N/A]

Figure 36. INT2 Register

7	6	5	4	3	2	1	0
VB_UV	VDDH_UV	VN_UV	VPOS_UV	VEE_UV	VCOMF	VNEG_UV	EOC
R-N/A	R-N/A	R-N/A	R-N/A	R-N/A	R-N/A	R-N/A	R-N/A

LEGEND: R/W = Read/Write; R = Read only; -n = value after reset

Table 11. INT2 Register Field Descriptions

Bit	Field	Type	Reset	Description
7	VB_UV	R	N/A	Positive boost converter undervoltage detect interrupt 0h = No fault 1h = Under-voltage on DCDC1 detected
6	VDDH_UV	R	N/A	VDDH under voltage detect interrupt 0h = No fault 1h = Undervoltage on VDDH charge pump detected
5	VN_UV	R	N/A	Inverting buck-boost converter under voltage detect interrupt 0h = No fault 1h = Undervoltage on DCDC2 detected
4	VPOS_UV	R	N/A	VPOS undervoltage detect interrupt 0h = No fault 1h = Undervoltage on LDO1(VPOS) detected
3	VEE_UV	R	N/A	VEE undervoltage detect interrupt 0h = No fault 1h = Undervoltage on VEE charge pump detected
2	VCOMF	R	N/A	VCOM fault detection 0h = No fault 1h = Fault on VCOM detected (VCOM is outside normal operating range)
1	VNEG_UV	R	N/A	VNEG undervoltage detect interrupt 0h = No fault 1h = Undervoltage on LDO2(VNEG) detected
0	EOC	R	N/A	ADC end of conversion interrupt 0h = No significance 1h = ADC conversion is complete (temperature acquisition is complete)

8.6.10 Power-Up Sequence 0 (UPSEQ0) Register (address = 0x09h) [reset = E4h]

Figure 37. UPSEQ0 Register

7	6	5	4	3	2	1	0
VDDH_UP[1:0]		VPOS_UP[1:0]		VEE_UP[1:0]		VNEG_UP[1:0]	
R/W-3h		R/W-2h		R/W-1h		R/W-0h	

LEGEND: R/W = Read/Write; R = Read only; -n = value after reset

Table 12. UPSEQ0 Register Field Descriptions

Bit	Field	Type	Reset	Description
7-6	VDDH_UP	R/W	3h	VDDH power-up order 0h = Power up on STROBE1 1h = Power up on STROBE2 2h = Power up on STROBE3 3h = Power up on STROBE4
5-4	VPOS_UP	R/W	2h	VPOS power-up order 0h = Power up on STROBE1 1h = Power up on STROBE2 2h = Power up on STROBE3 3h = Power up on STROBE4
3-2	VEE_UP	R/W	1h	VEE power-up order 0h = Power up on STROBE1 1h = Power up on STROBE2 2h = Power up on STROBE3 3h = Power up on STROBE4
1-0	VNEG_UP	R/W	0h	VNEG power-up order 0h = Power up on STROBE1 1h = Power up on STROBE2 2h = Power up on STROBE3 3h = Power up on STROBE4

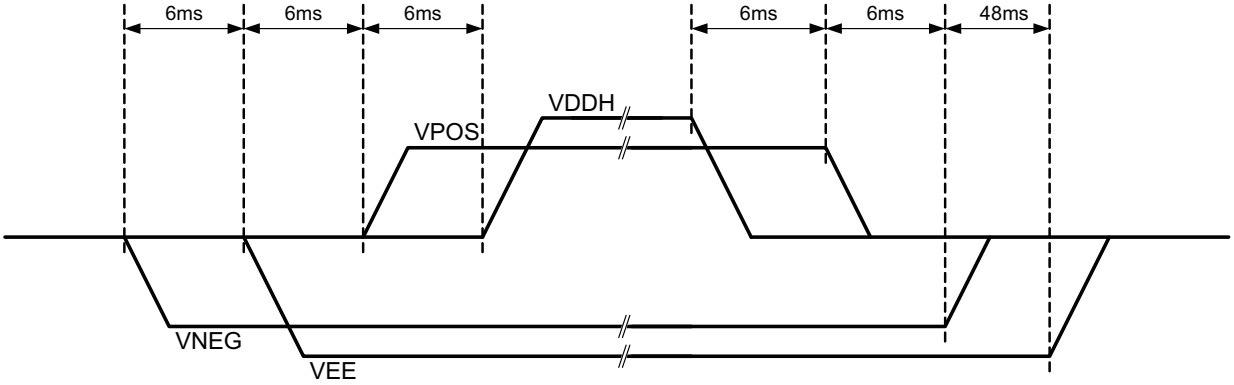

Figure 38. Default Power-Up/Down Sequence

Copyright © 2011–2017, Texas Instruments Incorporated

8.6.11 Power-Up Sequence 1 (UPSEQ1) Register (address = 0x0Ah) [reset = 55h]

Figure 39. UPSEQ1 Register

7	6	5	4	3	2	1	0
UDLY4[1:0]		UDLY3[1:0]		UDLY2[1:0]		UDLY1[1:0]	
R/W-1h		R/W-1h		R/W-1h		R/W-1h	

LEGEND: R/W = Read/Write; R = Read only; -n = value after reset

Table 13. UPSEQ1 Register Field Descriptions

Bit	Field	Type	Reset	Description
7-6	UDLY4	R/W	1h	DLY4 delay time set; defines the delay time from STROBE3 to STROBE4 during power up. 0h = 3 ms 1h = 6 ms 2h = 9 ms 3h = 12 ms
5-4	UDLY3	R/W	1h	DLY3 delay time set; defines the delay time from STROBE2 to STROBE3 during power up. 0h = 3 ms 1h = 6 ms 2h = 9 ms 3h = 12 ms
3-2	UDLY2	R/W	1h	DLY2 delay time set; defines the delay time from STROBE1 to STROBE2 during power up. 0h = 3 ms 1h = 6 ms 2h = 9 ms 3h = 12 ms
1-0	UDLY1	R/W	1h	DLY1 delay time set; defines the delay time from VN_PG high to STROBE1 during power up. 0h = 3 ms 1h = 6 ms 2h = 9 ms 3h = 12 ms

Copyright © 2011–2017, Texas Instruments Incorporated

8.6.12 Power-Down Sequence 0 (DWNSEQ0) Register (address = 0x0Bh) [reset = 1Eh]

Figure 40. DWNSEQ0 Register

7	6	5	4	3	2	1	0
VDDH_DWN[1:0]		VPOS_DWN[1:0]		VEE_DWN[1:0]		VNEG_DWN[1:0]	
R/W-0h		R/W-1h		R/W-3h		R/W-2h	

LEGEND: R/W = Read/Write; R = Read only; -n = value after reset

Table 14. DWNSEQ0 Register Field Descriptions

Bit	Field	Type	Reset	Description
7-6	VDDH_DWN	R/W	0h	VDDH power-down order 0h = Power down on STROBE1 1h = Power down on STROBE2 2h = Power down on STROBE3 3h = Power down on STROBE4
5-4	VPOS_DWN	R/W	1h	VPOS power-down order 0h = Power down on STROBE1 1h = Power down on STROBE2 2h = Power down on STROBE3 3h = Power down on STROBE4
3-2	VEE_DWN	R/W	3h	VEE power-down order 0h = Power down on STROBE1 1h = Power down on STROBE2 2h = Power down on STROBE3 3h = Power down on STROBE4
1-0	VNEG_DWN	R/W	2h	VNEG power-down order 0h = Power down on STROBE1 1h = Power down on STROBE2 2h = Power down on STROBE3 3h = Power down on STROBE4

Copyright © 2011–2017, Texas Instruments Incorporated

8.6.13 Power-Down Sequence 1 (DWNSEQ1) Register (address = 0x0Ch) [reset = E0h]

Figure 41. DWNSEQ1 Register

7	6	5	4	3	2	1	0
DDLY4[1:0]		DDLY3[1:0]		DDLY2[1:0]		DDLY1	DFCTR
R/W-3h		R/W-2h		R/W-0h		R/W-0h	R/W-0h

LEGEND: R/W = Read/Write; R = Read only; -n = value after reset

Table 15. DWNSEQ1 Register Field Descriptions

Bit	Field	Type	Reset	Description
7-6	DDLY4	R/W	3h	DLY4 delay time set; defines the delay time from STROBE3 to STROBE4 during power down. 0h = 6 ms 1h = 12 ms 2h = 24 ms 3h = 48 ms
5-4	DDLY3	R/W	2h	DLY3 delay time set; defines the delay time from STROBE2 to STROBE3 during power down. 0h = 6 ms 1h = 12 ms 2h = 24 ms 3h = 48 ms
3-2	DDLY2	R/W	0h	DLY2 delay time set; defines the delay time from STROBE1 to STROBE2 during power down. 0h = 6 ms 1h = 12 ms 2h = 24 ms 3h = 48 ms
1	DDLY1	R/W	0h	DLY2 delay time set; defines the delay time from WAKEUP low to STROBE1 during power down. 0h = 3 ms 1h = 6 ms
0	DFCTR	R/W	0h	At power-down delay time DLY2[1:0], DLY3[1:0], DLY4[1:0] are multiplied with DFCTR[1:0] 0h = 1x 1h = 16x

Copyright © 2011–2017, Texas Instruments Incorporated

8.6.14 Thermistor 1 (TMST1) Register (address = 0x0Dh) [reset = 20h]

Figure 42. TMST1 Register

7	6	5	4	3	2	1	0
READ_THERM	Not used	CONV_END	Not used	Not used	Not used	DT[1:0]	
R/W-0h	R/W-0h	R-1h	R/W-0h	R/W-0h	R/W-0h	R/W-0h	

LEGEND: R/W = Read/Write; R = Read only; -n = value after reset

Table 16. TMST1 Register Field Descriptions

Bit	Field	Type	Reset	Description
7	READ_THERM	R/W	0h	Read thermistor value 0h = No effect 1h = Initiates temperature acquisition NOTE: Bit is self-cleared after acquisition is completed
6	Not used	R/W	0h	Not used
5	CONV_END	R	1h	ADC conversion done flag 0h = Conversion is not finished 1h = Conversion is finished
4	Not used	R/W	0h	Not used
3	Not used	R/W	0h	Not used
2	Not used	R/W	0h	Not used
1-0	DT	R/W	0h	Panel temperature-change interrupt threshold 0h = 2°C 1h = 3°C 2h = 4°C 3h = 5°C DTX interrupt is issued when difference between most recent temperature reading and baseline temperature is equal to or greater than threshold value. See *Hot, Cold, and Temperature-Change Interrupts* for details.

Copyright © 2011–2017, Texas Instruments Incorporated

8.6.15 Thermistor 2 (TMST2) Register (address = 0x0Eh) [reset = 78h]

Figure 43. TMST2 Register

7	6	5	4	3	2	1	0
TMST_COLD[3:0]				TMST_HOT[3:0]			
R/W-7h				R/W-8h			

LEGEND: R/W = Read/Write; R = Read only; -n = value after reset

Table 17. TMST2 Register Field Descriptions

Bit	Field	Type	Reset	Description
7-4	READ_THERM	R/W	7h	Thermistor COLD threshold 0h = –7°C 1h = –6°C 2h = –5°C 3h = –4°C 4h = –3°C 5h = –2°C 6h = –1°C 7h = 0°C 8h = 1°C 9h = 2°C Ah = 3°C Bh = 4°C Ch = 5°C Dh = 6°C Eh = 7°C Fh = 8°C NOTE: An interrupt is issued when thermistor temperature is equal or less than COLD threshold
3-0	TMST_HOT	R/W	8h	Thermistor HOT threshold 0h = 42°C 1h = 43°C 2h = 44°C 3h = 45°C 4h = 46°C 5h = 47°C 6h = 48°C 7h = 49°C 8h = 50°C 9h = 51°C Ah = 52°C Bh = 53°C Ch = 54°C Dh = 55°C Eh = 56°C Fh = 57°C NOTE: An interrupt is issued when thermistor temperature is equal or greater than HOT threshold

Copyright © 2011–2017, Texas Instruments Incorporated

8.6.16 Power Good Status (PG) Register (address = 0x0Fh) [reset = 0h]

NOTE: PG pin is pulled hi (HiZ state) when VDDH_PG = VPOS_PG = VEE_PG = VNEG_PG = 1

Figure 44. PG Register

7	6	5	4	3	2	1	0
VB_PG	VDDH_PG	VN_PG	VPOS_PG	VEE_PG	Not used	VNEG_PG	Not used
R-0h	R-0h	R-0h	R-0h	R-0h	R-0h	R-0h	R-0h

LEGEND: R/W = Read/Write; R = Read only; -n = value after reset

Table 18. PG Register Field Descriptions

Bit	Field	Type	Reset	Description
7	VB_PG	R	0h	Positive boost converter power good 0h = DCDC1 is not in regulation or turned off 1h = DCDC1 is in regulation
6	VDDH_PG	R	0h	VDDH power good 0h = VDDH charge pump is not in regulation or turned off 1h = VDDH charge pump is in regulation
5	VN_PG	R	0h	Inverting buck-boost power good 0h = DCDC2 is not in regulation or turned off 1h = DCDC2 is in regulation
4	VPOS_PG	R	0h	VPOS power good 0h = LDO1(VPOS) is not in regulation or turned off 1h = LDO1(VPOS) is in regulation
3	VEE_PG	R	0h	VEE power good 0h = VEE charge pump is not in regulation or turned off 1h = VEE charge pump is in regulation
2	Not used	R	0h	Not used
1	VNEG_PG	R	0h	VNEG power good 0h = LDO2(VNEG) is not in regulation or turned off 1h = LDO2(VNEG) is in regulation
0	Not used	R	0h	Not used

8.6.17 Revision and Version Control (REVID) Register (address = 0x10h) [reset = 45h]

Figure 45. REVID Register

7	6	5	4	3	2	1	0
REVID[7:0]							
R-45h							

LEGEND: R/W = Read/Write; R = Read only; -n = value after reset

Table 19. REVID Register Field Descriptions

Bit	Field	Type	Reset	Description
7-0	REVID	R	45h	REVID[7:6] = MJREV REVID[5:4] = MNREV REVID[3:0] = VERSION 45h = TPS65185 1p0 55h = TPS65185 1p1 65h = TPS65185 1p2 66h = TPS651851 1p0

Copyright © 2011–2017, Texas Instruments Incorporated

9 Application and Implementation

NOTE

Information in the following applications sections is not part of the TI component specification, and TI does not warrant its accuracy or completeness. TI's customers are responsible for determining suitability of components for their purposes. Customers should validate and test their design implementation to confirm system functionality.

9.1 Application Information

The TPS65185x device is used to power display screens in E-book applications, specifically E-Ink Vizplex display, by connecting the screen to the positive and negative charge pump, LDO1, LDO2, and VCOM rails. The device supports display screens up to 9.7 inches.

9.2 Typical Application

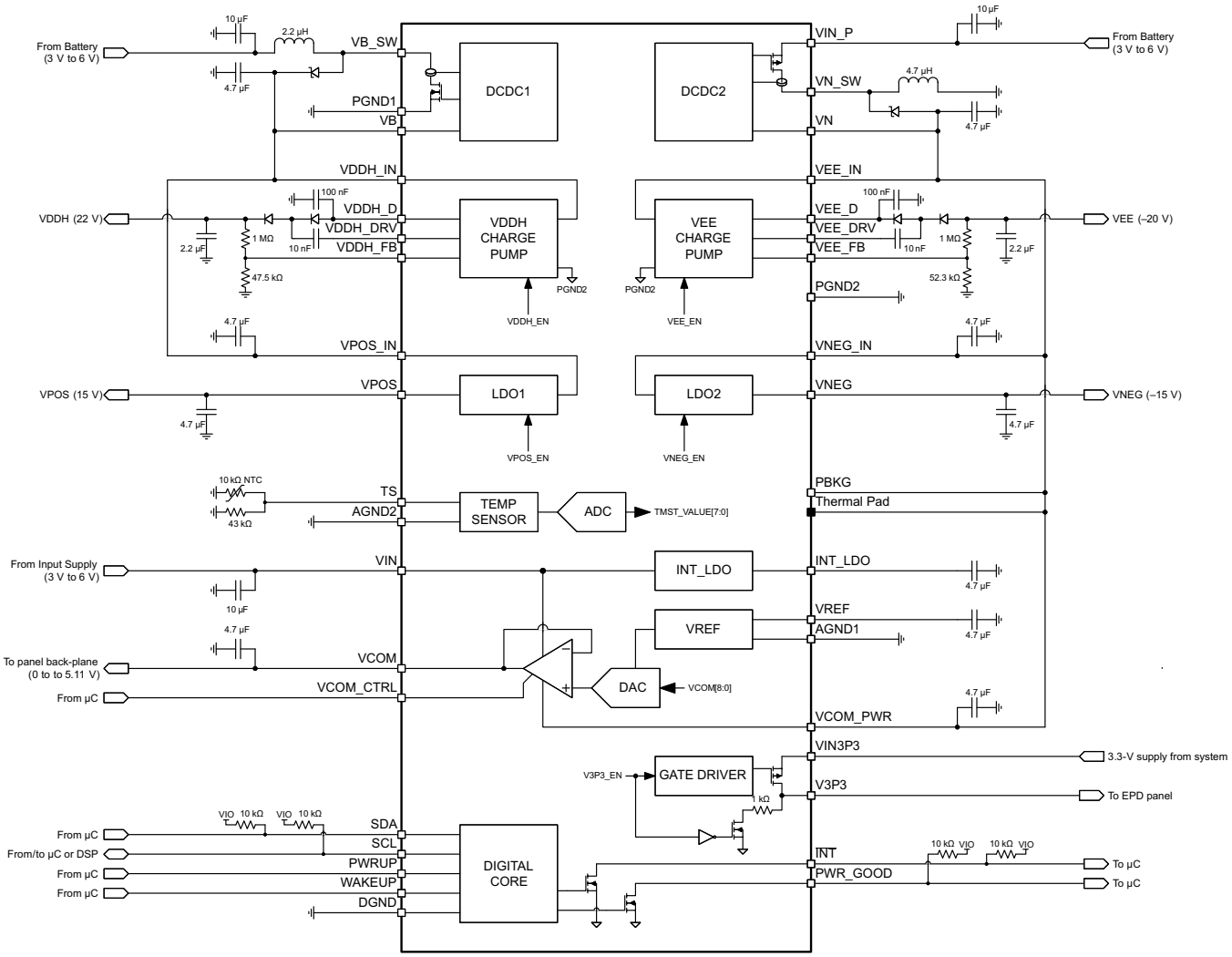

Copyright © 2017, Texas Instruments Incorporated

Figure 46. Typical Application Schematic

Typical Application (continued)

9.2.1 Design Requirements

For this design example, use the parameters listed in Table 20 as the input parameters.

Table 20. Design Parameters

	VOLTAGE	SEQUENCE (STROBE)
VNEG (LDO2)	–15 V	1
VEE (Charge pump 2)	–20 V	2
VPOS (LDO1)	15 V	3
VDDH (Charge pump 1)	22 V	4

9.2.2 Detailed Design Procedure

For the positive boost regulator (DCDC1) a 10-µF capacitor can be used as the input capacitor value; two 4.7-µF capacitors are used as output capacitors to reduce ESR along with a 2.2-µH inductor. For the inverting buck-boost regulator (DCDC2), a 10-µF capacitor can be used at the input capacitor value; two 4.7-µF capacitors are used as output capacitors to reduce ESR along with a 4.7-µH inductor. The charge pump pins VDDH_D and VEE_D require 100-nF capacitors to ground for reliable operation. An ESR capacitor with a value of 20 mΩ is expected for all capacitors, and ceramic X5R material or better is recommended. These values are the typical the values used; additional inductor and capacitor values can be used for improved functionality; however, the components should be rated the same as the recommended external components listed in Table 21.

Table 21. Recommended External Components

PART NUMBER	VALUE	SIZE	MANUFACTURER
INDUCTORS			
LQH44PN4R7MP0	4.7 µH	4 mm × 4 mm × 1.65 mm	Murata
NR4018T4R7M	4.7 µH	4 mm × 4 mm × 1.8 mm	Taiyo Yuden
VLS252015ET-2R2M	2.2 µH	2 mm × 2.5 mm × 1.5 mm	TDK
NR4012T2R2M	2.2 µH	4 mm × 4 mm × 1.2 mm	Taiyo Yuden
CAPACITORS			
GRM21BC81E475KA12L	4.7 µF, 25 V, X6S	805	Murata
GRM32ER71H475KA88L	4.7 µF, 50 V, X7R	1210	Murata
All other capacitors	X5R or better	—	—
DIODES			
BAS3010	—	SOD-323	Infineon
MBR130T1	—	SOD-123	ON-Semi
BAV99	—	SOT-23	Fairchild
THERMISTOR			
NCP18XH103F03RB	10 kΩ	603	Murata

Copyright © 2011–2017, Texas Instruments Incorporated

9.2.3 Application Curves

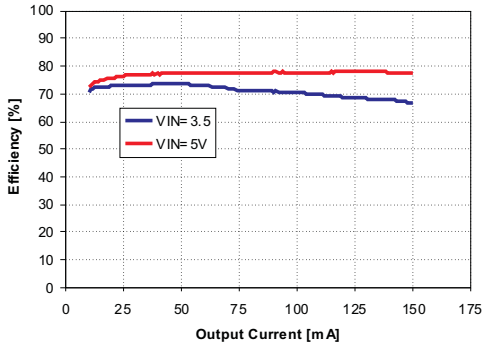

T = 25°C

Figure 47. VN DCDC Efficiency

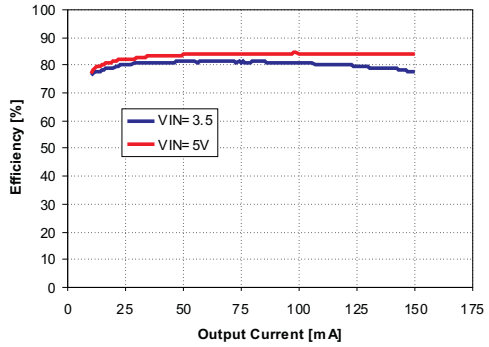

T = 25°C

Figure 48. VB DCDC Efficiency

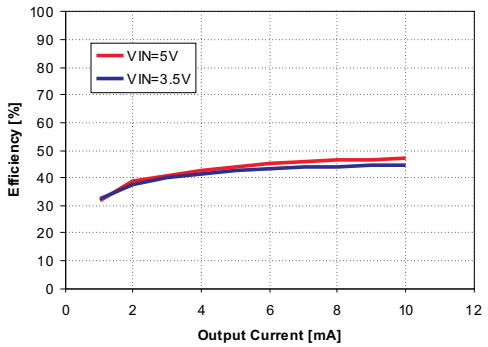

T = 25°C

Figure 49. VEE Charge Pump Efficiency

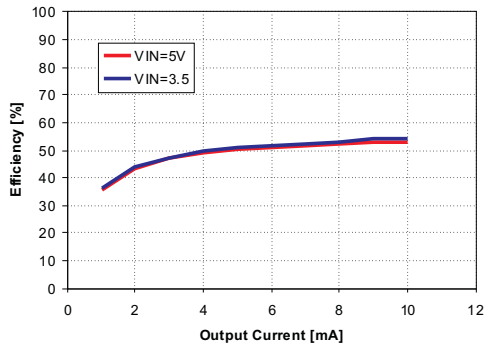

T = 25°C

Figure 50. VDDH Charge Pump Efficiency

10 Power Supply Recommendations

The device is designed to operate with an input voltage supply range from 3 V to 6 V, where Figure 5 and Figure 6 show how lower input supply voltages can result in larger inrush currents. This input supply can be from a externally regulated supply. If the input supply is located more than a few inches from the TPS65185x, additional bulk capacitance may be required in addition to the ceramic bypass capacitors. An electrolytic capacitor with a value of 10 µF is a typical choice.

11 Layout

11.1 Layout Guidelines

1. PBKG (Die substrate) must connect to VN (–16 V) with short, wide trace. Wide copper trace will improve heat dissipation.
2. The thermal pad is internally connected to PBKG and must not be connected to ground, but connected to VN with a short wide copper trace.
3. Inductor traces must be kept on the PCB top layer free of any vias.
4. Feedback traces must be routed away from any potential noise source to avoid coupling.
5. Output caps must be placed immediately at output pin.
6. The VIN pins must be bypassed to ground with low ESR ceramic bypass capacitors.

11.2 Layout Example

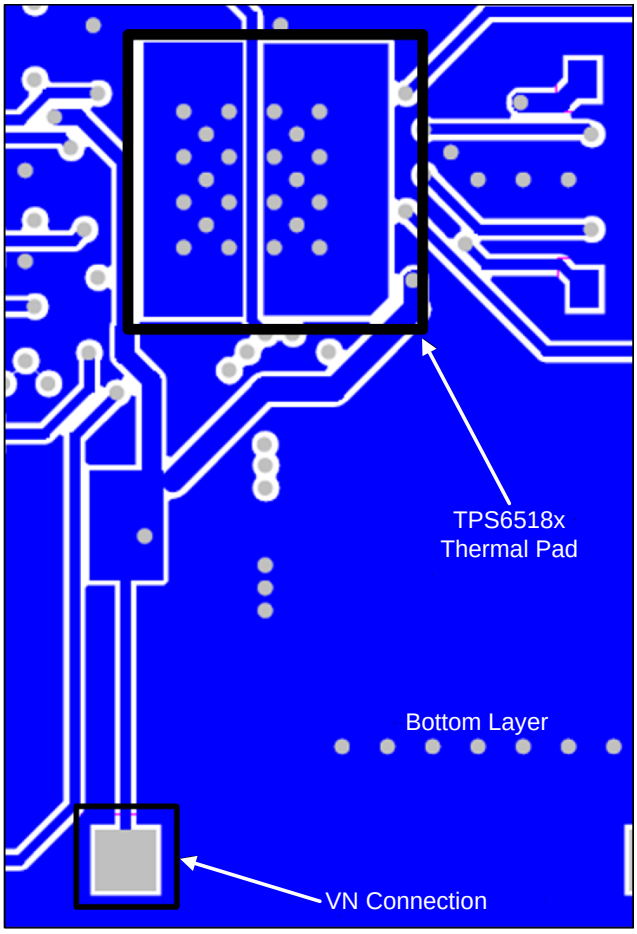

Figure 51. Layout Diagram

Copyright © 2011–2017, Texas Instruments Incorporated

12 Device and Documentation Support

12.1 Device Support

12.1.1 Third-Party Products Disclaimer

TI'S PUBLICATION OF INFORMATION REGARDING THIRD-PARTY PRODUCTS OR SERVICES DOES NOT CONSTITUTE AN ENDORSEMENT REGARDING THE SUITABILITY OF SUCH PRODUCTS OR SERVICES OR A WARRANTY, REPRESENTATION OR ENDORSEMENT OF SUCH PRODUCTS OR SERVICES, EITHER ALONE OR IN COMBINATION WITH ANY TI PRODUCT OR SERVICE.

12.2 Documentation Support

12.2.1 Related Documentation

For related documentation see the following:

- Texas Instruments, *TPS65185 Evaluation Module* user's guide
- Texas Instruments, *Understanding Undervoltage Lockout in Display Power Devices* application report

12.3 Receiving Notification of Documentation Updates

To receive notification of documentation updates, navigate to the device product folder on ti.com. In the upper right corner, click on *Alert me* to register and receive a weekly digest of any product information that has changed. For change details, review the revision history included in any revised document.

12.4 Community Resources

The following links connect to TI community resources. Linked contents are provided "AS IS" by the respective contributors. They do not constitute TI specifications and do not necessarily reflect TI's views; see TI's Terms of Use.

TI E2E™ Online Community ***TI's Engineer-to-Engineer (E2E) Community.*** Created to foster collaboration among engineers. At e2e.ti.com, you can ask questions, share knowledge, explore ideas and help solve problems with fellow engineers.

Design Support ***TI's Design Support*** Quickly find helpful E2E forums along with design support tools and contact information for technical support.

12.5 Trademarks

OMAP, E2E are trademarks of Texas Instruments.
Vizplex is a trademark of E Ink Corporation.
E Ink is a registered trademark of E Ink Corporation.
All other trademarks are the property of their respective owners.

12.6 Electrostatic Discharge Caution

This integrated circuit can be damaged by ESD. Texas Instruments recommends that all integrated circuits be handled with appropriate precautions. Failure to observe proper handling and installation procedures can cause damage.

ESD damage can range from subtle performance degradation to complete device failure. Precision integrated circuits may be more susceptible to damage because very small parametric changes could cause the device not to meet its published specifications.

12.7 Glossary

SLYZ022 — *TI Glossary*.

This glossary lists and explains terms, acronyms, and definitions.

13 Mechanical, Packaging, and Orderable Information

The following pages include mechanical, packaging, and orderable information. This information is the most current data available for the designated devices. This data is subject to change without notice and revision of this document. For browser-based versions of this data sheet, refer to the left-hand navigation.

PACKAGING INFORMATION

Orderable Device	Status (1)	Package Type	Package Drawing	Pins	Package Qty	Eco Plan (2)	Lead/Ball Finish (6)	MSL Peak Temp (3)	Op Temp (°C)	Device Marking (4/5)	Samples
TPS651851RSLR	ACTIVE	VQFN	RSL	48	2500	Green (RoHS & no Sb/Br)	CU NIPDAU	Level-3-260C-168 HR	-10 to 85	TPS 651851	Samples
TPS651851RSLT	ACTIVE	VQFN	RSL	48	250	Green (RoHS & no Sb/Br)	CU NIPDAU	Level-3-260C-168 HR	-10 to 85	TPS 651851	Samples
TPS65185RGZR	ACTIVE	VQFN	RGZ	48	2500	Green (RoHS & no Sb/Br)	CU NIPDAU	Level-3-260C-168 HR	-40 to 85	E INK TPS65185	Samples
TPS65185RGZT	ACTIVE	VQFN	RGZ	48	250	Green (RoHS & no Sb/Br)	CU NIPDAU	Level-3-260C-168 HR	-40 to 85	E INK TPS65185	Samples
TPS65185RSLR	ACTIVE	VQFN	RSL	48	2500	Green (RoHS & no Sb/Br)	CU NIPDAU	Level-3-260C-168 HR	-40 to 85	TPS 65185	Samples
TPS65185RSLT	ACTIVE	VQFN	RSL	48	250	Green (RoHS & no Sb/Br)	CU NIPDAU	Level-3-260C-168 HR	-40 to 85	TPS 65185	Samples

(1) The marketing status values are defined as follows:
ACTIVE: Product device recommended for new designs.
LIFEBUY: TI has announced that the device will be discontinued, and a lifetime-buy period is in effect.
NRND: Not recommended for new designs. Device is in production to support existing customers, but TI does not recommend using this part in a new design.
PREVIEW: Device has been announced but is not in production. Samples may or may not be available.
OBSOLETE: TI has discontinued the production of the device.

(2) **RoHS:** TI defines "RoHS" to mean semiconductor products that are compliant with the current EU RoHS requirements for all 10 RoHS substances, including the requirement that RoHS substance do not exceed 0.1% by weight in homogeneous materials. Where designed to be soldered at high temperatures, "RoHS" products are suitable for use in specified lead-free processes. TI may reference these types of products as "Pb-Free".
RoHS Exempt: TI defines "RoHS Exempt" to mean products that contain lead but are compliant with EU RoHS pursuant to a specific EU RoHS exemption.
Green: TI defines "Green" to mean the content of Chlorine (Cl) and Bromine (Br) based flame retardants meet JS709B low halogen requirements of <=1000ppm threshold. Antimony trioxide based flame retardants must also meet the <=1000ppm threshold requirement.

(3) MSL, Peak Temp. - The Moisture Sensitivity Level rating according to the JEDEC industry standard classifications, and peak solder temperature.

(4) There may be additional marking, which relates to the logo, the lot trace code information, or the environmental category on the device.

(5) Multiple Device Markings will be inside parentheses. Only one Device Marking contained in parentheses and separated by a "~" will appear on a device. If a line is indented then it is a continuation of the previous line and the two combined represent the entire Device Marking for that device.

(6) Lead/Ball Finish - Orderable Devices may have multiple material finish options. Finish options are separated by a vertical ruled line. Lead/Ball Finish values may wrap to two lines if the finish value exceeds the maximum column width.

Important Information and Disclaimer: The information provided on this page represents TI's knowledge and belief as of the date that it is provided. TI bases its knowledge and belief on information provided by third parties, and makes no representation or warranty as to the accuracy of such information. Efforts are underway to better integrate information from third parties. TI has taken and continues to take reasonable steps to provide representative and accurate information but may not have conducted destructive testing or chemical analysis on incoming materials and chemicals. TI and TI suppliers consider certain information to be proprietary, and thus CAS numbers and other limited information may not be available for release.

In no event shall TI's liability arising out of such information exceed the total purchase price of the TI part(s) at issue in this document sold by TI to Customer on an annual basis.

TAPE AND REEL INFORMATION

REEL DIMENSIONS

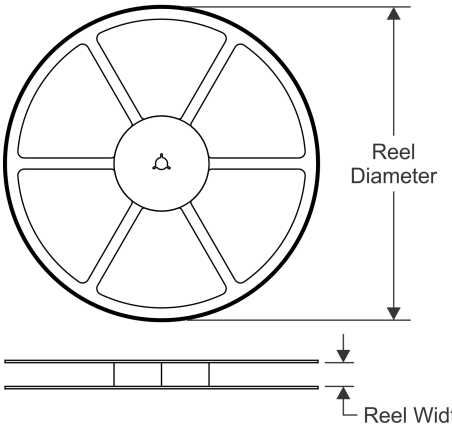

TAPE DIMENSIONS

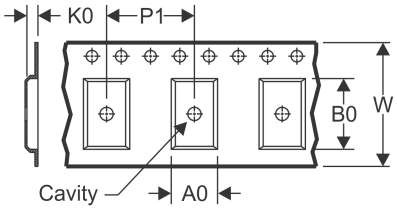

A0	Dimension designed to accommodate the component width
B0	Dimension designed to accommodate the component length
K0	Dimension designed to accommodate the component thickness
W	Overall width of the carrier tape
P1	Pitch between successive cavity centers

QUADRANT ASSIGNMENTS FOR PIN 1 ORIENTATION IN TAPE

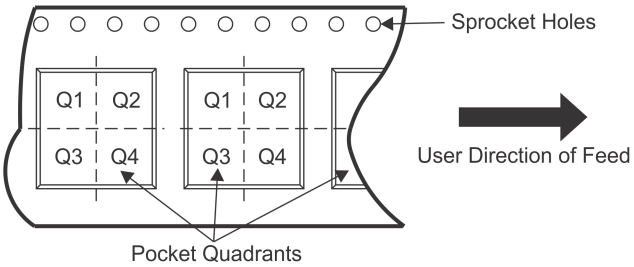

*All dimensions are nominal

Device	Package Type	Package Drawing	Pins	SPQ	Reel Diameter (mm)	Reel Width W1 (mm)	A0 (mm)	B0 (mm)	K0 (mm)	P1 (mm)	W (mm)	Pin1 Quadrant
TPS651851RSLR	VQFN	RSL	48	2500	330.0	16.4	6.3	6.3	1.1	12.0	16.0	Q2
TPS651851RSLT	VQFN	RSL	48	250	180.0	16.4	6.3	6.3	1.1	12.0	16.0	Q2
TPS65185RGZR	VQFN	RGZ	48	2500	330.0	16.4	7.3	7.3	1.1	12.0	16.0	Q2
TPS65185RGZT	VQFN	RGZ	48	250	180.0	16.4	7.3	7.3	1.1	12.0	16.0	Q2
TPS65185RSLR	VQFN	RSL	48	2500	330.0	16.4	6.3	6.3	1.1	12.0	16.0	Q2
TPS65185RSLT	VQFN	RSL	48	250	180.0	16.4	6.3	6.3	1.1	12.0	16.0	Q2

TAPE AND REEL BOX DIMENSIONS

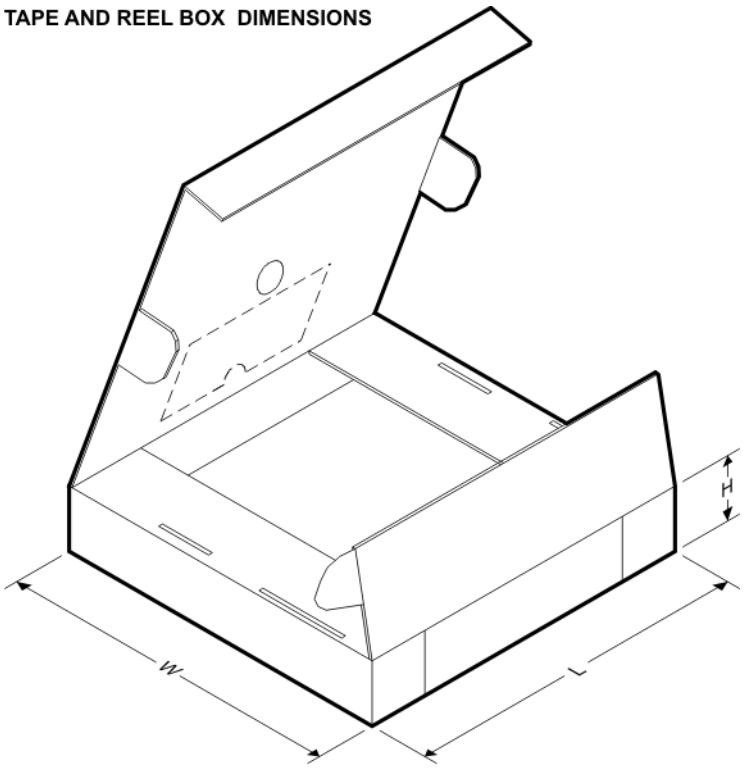

*All dimensions are nominal

Device	Package Type	Package Drawing	Pins	SPQ	Length (mm)	Width (mm)	Height (mm)
TPS651851RSLR	VQFN	RSL	48	2500	367.0	367.0	38.0
TPS651851RSLT	VQFN	RSL	48	250	210.0	185.0	35.0
TPS65185RGZR	VQFN	RGZ	48	2500	367.0	367.0	38.0
TPS65185RGZT	VQFN	RGZ	48	250	210.0	185.0	35.0
TPS65185RSLR	VQFN	RSL	48	2500	367.0	367.0	38.0
TPS65185RSLT	VQFN	RSL	48	250	210.0	185.0	35.0

RSL (S-PVQFN-N48) PLASTIC QUAD FLATPACK NO-LEAD

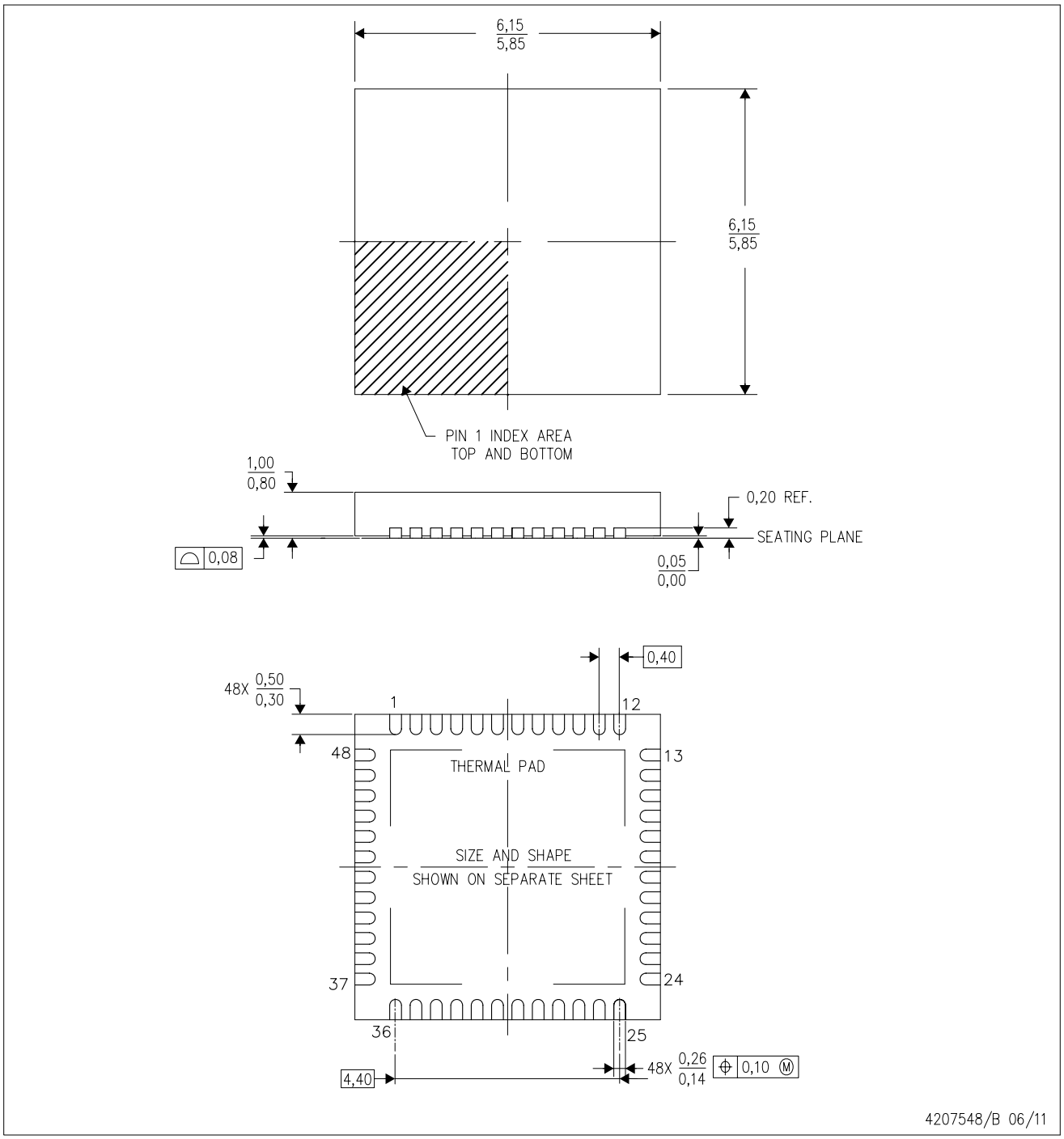

NOTES:
A. All linear dimensions are in millimeters. Dimensioning and tolerancing per ASME Y14.5M-1994.
B. This drawing is subject to change without notice.
C. Quad Flatpack, No-leads (QFN) package configuration.
D. The package thermal pad must be soldered to the board for thermal and mechanical performance.
E. See the additional figure in the Product Data Sheet for details regarding the exposed thermal pad features and dimensions.

RSL (S–PVQFN–N48) PLASTIC QUAD FLATPACK NO–LEAD

THERMAL INFORMATION

This package incorporates an exposed thermal pad that is designed to be attached directly to an external heatsink. The thermal pad must be soldered directly to the printed circuit board (PCB). After soldering, the PCB can be used as a heatsink. In addition, through the use of thermal vias, the thermal pad can be attached directly to the appropriate copper plane shown in the electrical schematic for the device, or alternatively, can be attached to a special heatsink structure designed into the PCB. This design optimizes the heat transfer from the integrated circuit (IC).

For information on the Quad Flatpack No–Lead (QFN) package and its advantages, refer to Application Report, QFN/SON PCB Attachment, Texas Instruments Literature No. SLUA271. This document is available at www.ti.com.

The exposed thermal pad dimensions for this package are shown in the following illustration.

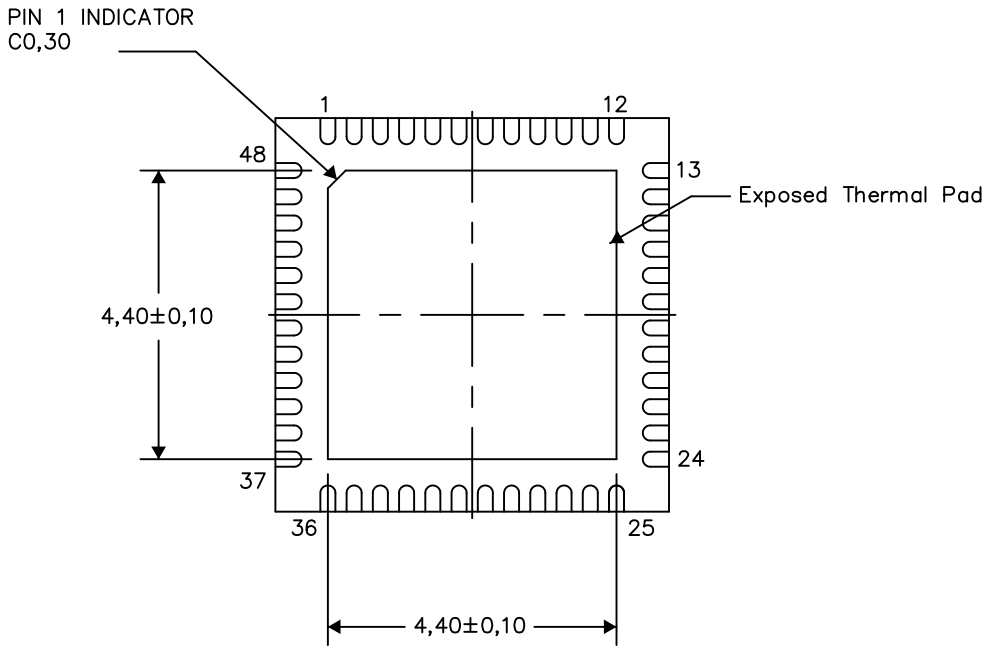

Bottom View

Exposed Thermal Pad Dimensions

4207841–2/P 03/13

NOTE: All linear dimensions are in millimeters

RSL (S–PVQFN–N48) PLASTIC QUAD FLATPACK NO–LEAD

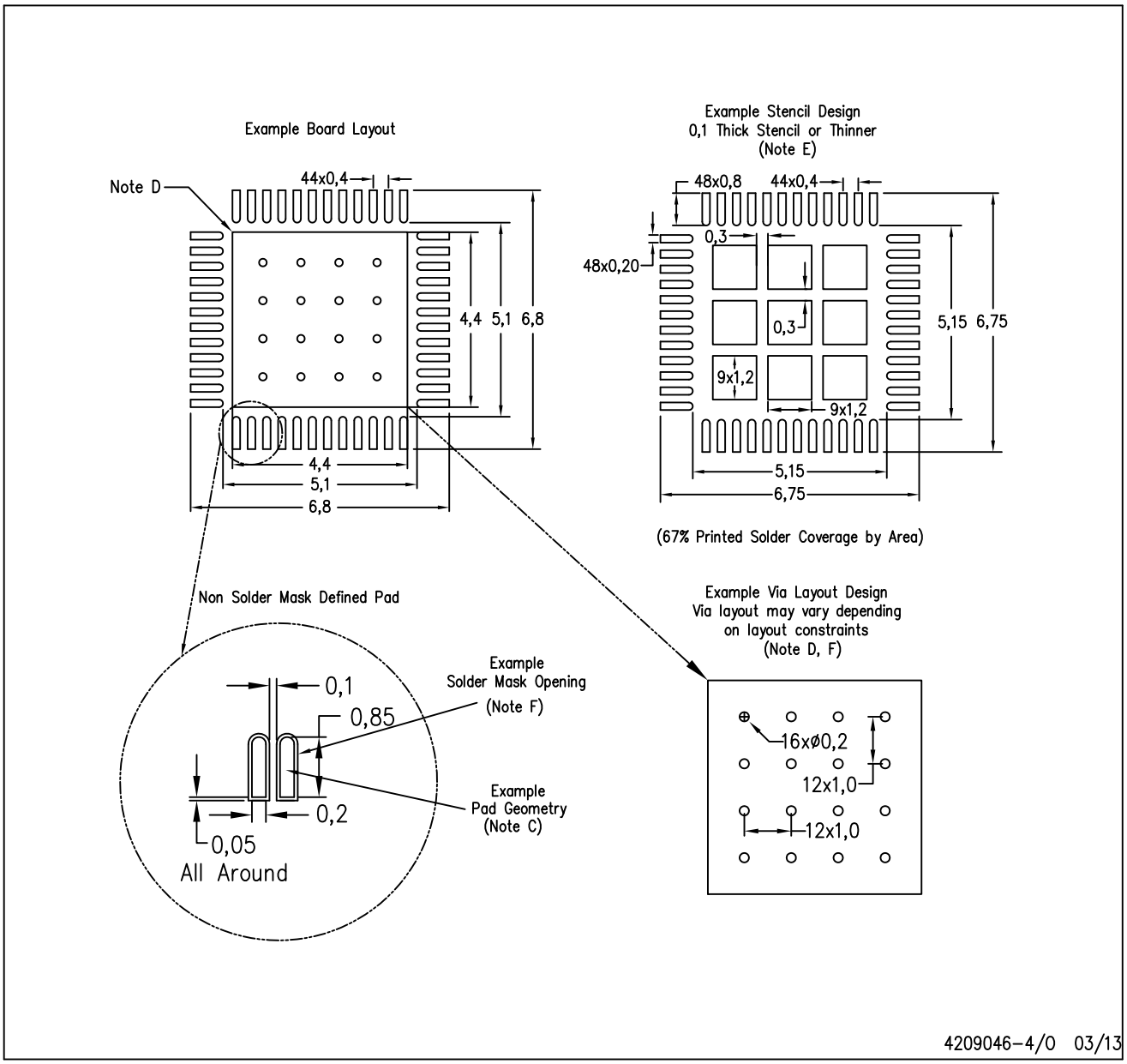

NOTES:
- A. All linear dimensions are in millimeters.
- B. This drawing is subject to change without notice.
- C. Publication IPC–7351 is recommended for alternate designs.
- D. This package is designed to be soldered to a thermal pad on the board. Refer to Application Note, QFN/SON PCB Attachment, Texas Instruments Literature No. SLUA271, and also the Product Data Sheets for specific thermal information, via requirements, and recommended board layout. These documents are available at www.ti.com <http://www.ti.com>.
- E. Laser cutting apertures with trapezoidal walls and also rounding corners will offer better paste release. Customers should contact their board assembly site for stencil design recommendations. Refer to IPC 7525 for stencil design considerations.
- F. Customers should contact their board fabrication site for recommended solder mask tolerances and via tenting recommendations for vias placed in the thermal pad.

GENERIC PACKAGE VIEW

RGZ 48

VQFN - 1 mm max height

7 x 7, 0.5 mm pitch

PLASTIC QUADFLAT PACK- NO LEAD

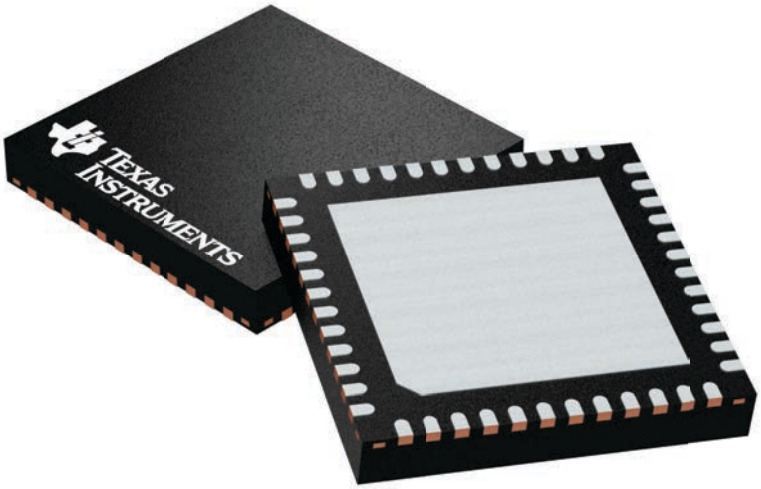

Images above are just a representation of the package family, actual package may vary.
Refer to the product data sheet for package details.

4224671/A

RGZ0048B

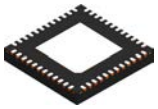

PACKAGE OUTLINE

VQFN - 1 mm max height

PLASTIC QUAD FLATPACK - NO LEAD

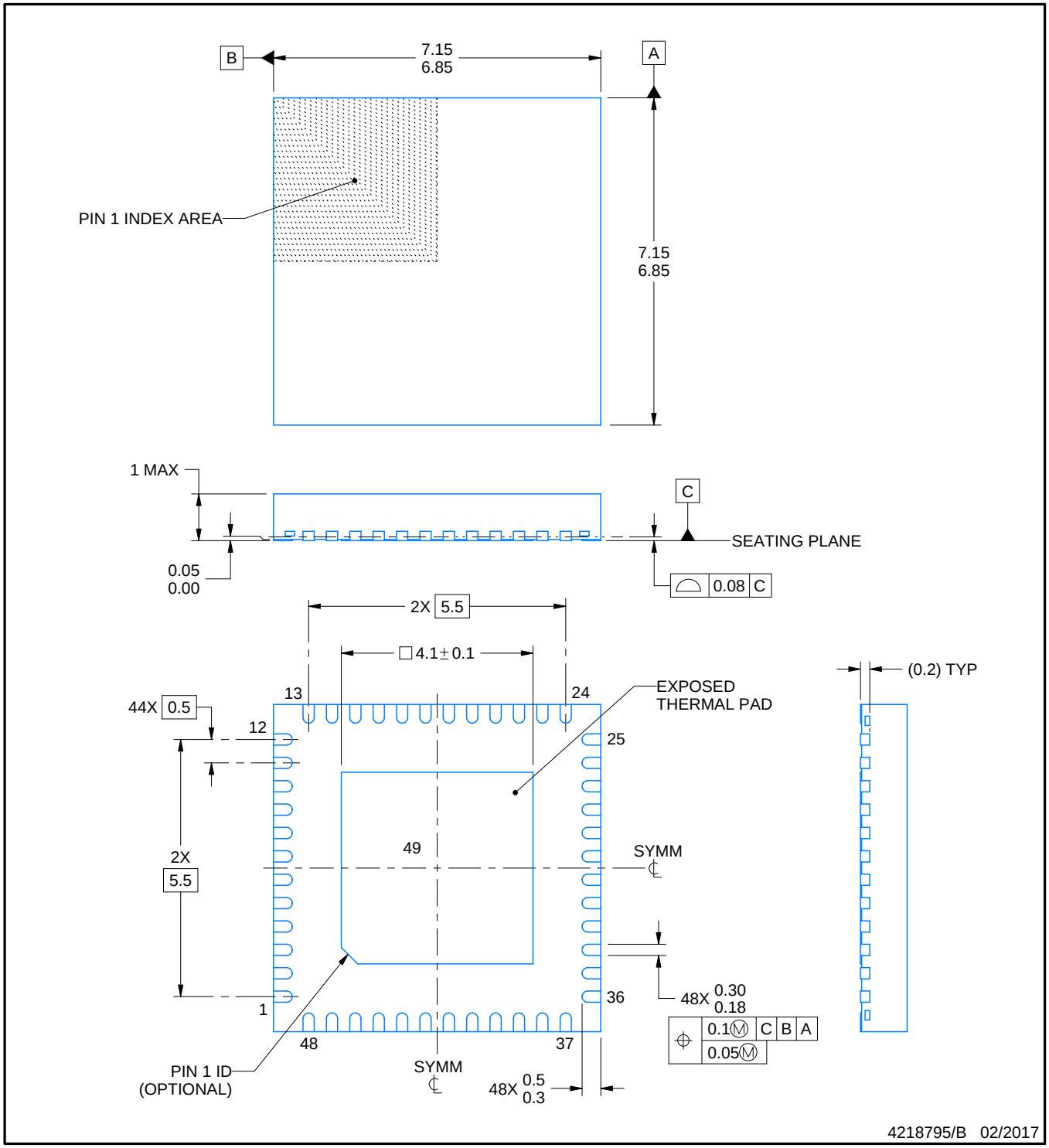

NOTES:

1. All linear dimensions are in millimeters. Any dimensions in parenthesis are for reference only. Dimensioning and tolerancing per ASME Y14.5M.
2. This drawing is subject to change without notice.
3. The package thermal pad must be soldered to the printed circuit board for thermal and mechanical performance.

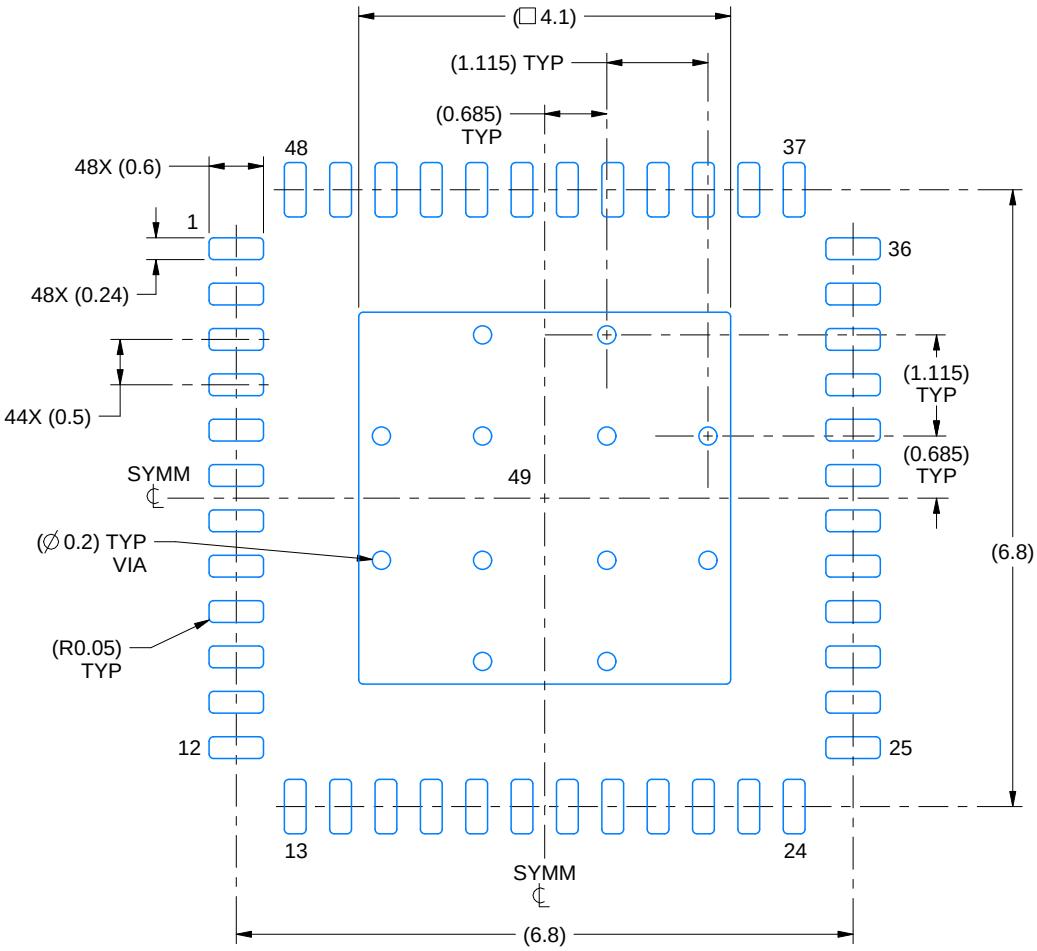

LAND PATTERN EXAMPLE
EXPOSED METAL SHOWN
SCALE:12X

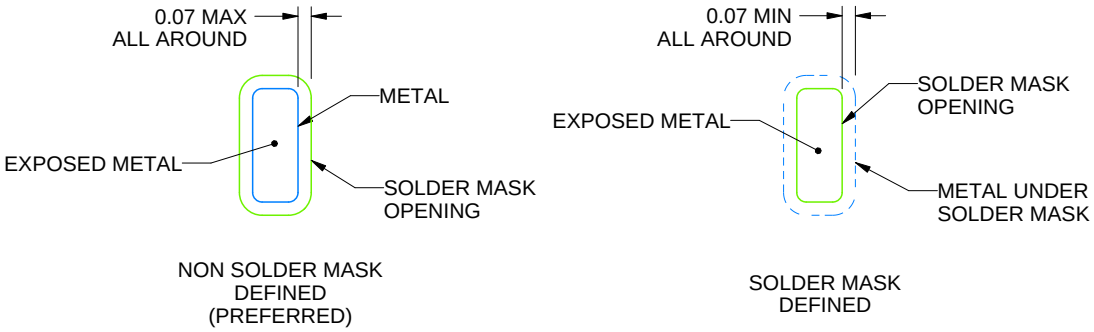

SOLDER MASK DETAILS

4218795/B 02/2017

NOTES: (continued)

4. This package is designed to be soldered to a thermal pad on the board. For more information, see Texas Instruments literature number SLUA271 (www.ti.com/lit/slua271).
5. Vias are optional depending on application, refer to device data sheet. If any vias are implemented, refer to their locations shown on this view. It is recommended that vias under paste be filled, plugged or tented.

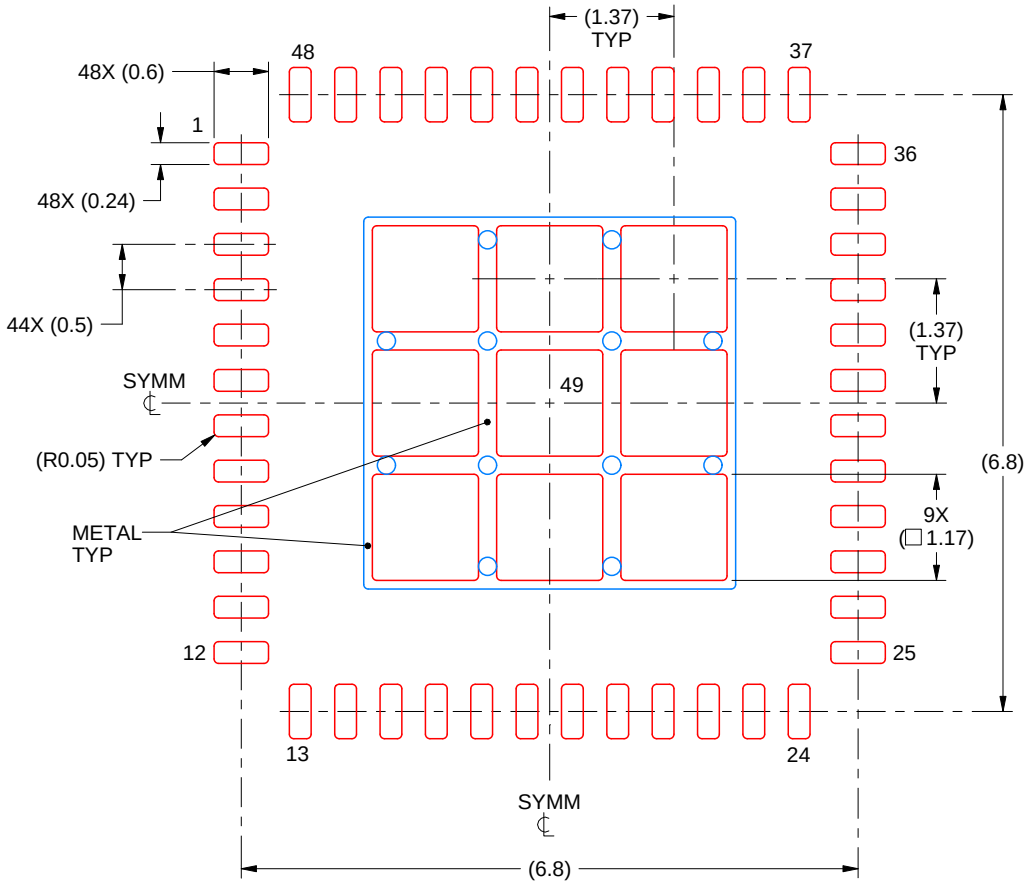

SOLDER PASTE EXAMPLE
BASED ON 0.125 mm THICK STENCIL

EXPOSED PAD 49
73% PRINTED SOLDER COVERAGE BY AREA UNDER PACKAGE
SCALE:12X

4218795/B 02/2017

NOTES: (continued)

6. Laser cutting apertures with trapezoidal walls and rounded corners may offer better paste release. IPC-7525 may have alternate design recommendations.

IMPORTANT NOTICE AND DISCLAIMER

TI PROVIDES TECHNICAL AND RELIABILITY DATA (INCLUDING DATASHEETS), DESIGN RESOURCES (INCLUDING REFERENCE DESIGNS), APPLICATION OR OTHER DESIGN ADVICE, WEB TOOLS, SAFETY INFORMATION, AND OTHER RESOURCES “AS IS” AND WITH ALL FAULTS, AND DISCLAIMS ALL WARRANTIES, EXPRESS AND IMPLIED, INCLUDING WITHOUT LIMITATION ANY IMPLIED WARRANTIES OF MERCHANTABILITY, FITNESS FOR A PARTICULAR PURPOSE OR NON-INFRINGEMENT OF THIRD PARTY INTELLECTUAL PROPERTY RIGHTS.

These resources are intended for skilled developers designing with TI products. You are solely responsible for (1) selecting the appropriate TI products for your application, (2) designing, validating and testing your application, and (3) ensuring your application meets applicable standards, and any other safety, security, or other requirements. These resources are subject to change without notice. TI grants you permission to use these resources only for development of an application that uses the TI products described in the resource. Other reproduction and display of these resources is prohibited. No license is granted to any other TI intellectual property right or to any third party intellectual property right. TI disclaims responsibility for, and you will fully indemnify TI and its representatives against, any claims, damages, costs, losses, and liabilities arising out of your use of these resources.

TI’s products are provided subject to TI’s Terms of Sale (www.ti.com/legal/termsofsale.html) or other applicable terms available either on ti.com or provided in conjunction with such TI products. TI’s provision of these resources does not expand or otherwise alter TI’s applicable warranties or warranty disclaimers for TI products.

Mailing Address: Texas Instruments, Post Office Box 655303, Dallas, Texas 75265
Copyright © 2019, Texas Instruments Incorporated

Looking for pricing, stock, or lifecycle information?

Click below to explore more details on WIN SOURCE:

- View TPS65185RSLT on WIN SOURCE
- Texas Instruments Information

Optimize Your Supply Chain with WIN SOURCE Solutions

- Global Sourcing Solution
- Obsolete Management
- Cost Control Management
- Shortage Management
- Alternative Solution
- Excess Inventory Management