THE DATASHEET OF

SN74LVTH543PWR

www.win-source.net 0086-755-83957316

- **Support Mixed-Mode Signal Operation (5-V Input and Output Voltages With 3.3-V V_{CC})**
- **Typical V_{OLP} (Output Ground Bounce) <0.8 V at V_{CC} = 3.3 V, T_A = 25°C**
- **Support Unregulated Battery Operation Down to 2.7 V**
- **I_{off} and Power-Up 3-State Support Hot Insertion**
- **Bus Hold on Data Inputs Eliminates the Need for External Pullup/Pulldown Resistors**
- **Latch-Up Performance Exceeds 500 mA Per JESD 17**
- **ESD Protection Exceeds JESD 22**
  - **2000-V Human-Body Model (A114-A)**
  - **200-V Machine Model (A115-A)**

SN54LVTH543 . . . JT OR W PACKAGE
SN74LVTH543 . . . DB, DGV, DW, NS, OR PW PACKAGE
(TOP VIEW)

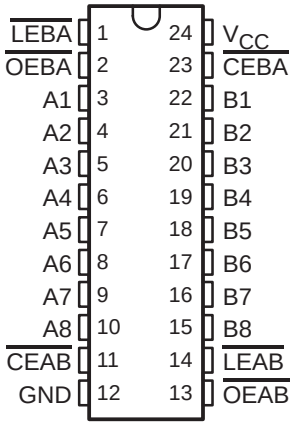

SN54LVTH543 . . . FK PACKAGE
(TOP VIEW)

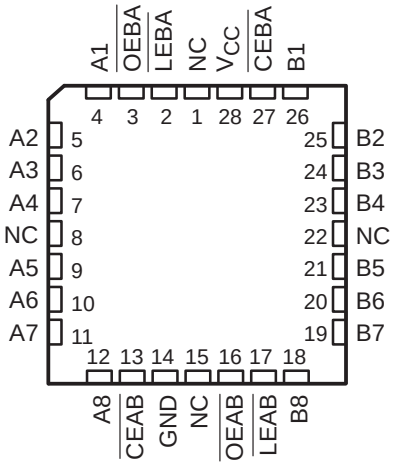

NC − No internal connection

description/ordering information

These octal transceivers are designed specifically for low-voltage (3.3-V) V_{CC} operation, but with the capability to provide a TTL interface to a 5-V system environment.

ORDERING INFORMATION

T_A	PACKAGE†		ORDERABLE PART NUMBER	TOP-SIDE MARKING
−40°C to 85°C	SOIC − DW	Tube	SN74LVTH543DW	LVTH543
		Tape and reel	SN74LVTH543DWR	
	SOP − NS	Tape and reel	SN74LVTH543NSR	LVTH543
	SSOP − DB	Tape and reel	SN74LVTH543DBR	LXH543
	TSSOP − PW	Tube	SN74LVTH543PW	LXH543
		Tape and reel	SN74LVTH543PWR	
	TVSOP − DGV	Tape and reel	SN74LVTH543DGVR	LXH543
−55°C to 125°C	CDIP − JT	Tube	SNJ54LVTH543JT	SNJ54LVTH543JT
	CFP − W	Tube	SNJ54LVTH543W	SNJ54LVTH543W
	LCCC − FK	Tube	SNJ54LVTH543FK	SNJ54LVTH543FK

† Package drawings, standard packing quantities, thermal data, symbolization, and PCB design guidelines are available at www.ti.com/sc/package.

Please be aware that an important notice concerning availability, standard warranty, and use in critical applications of Texas Instruments semiconductor products and disclaimers thereto appears at the end of this data sheet.

UNLESS OTHERWISE NOTED this document contains PRODUCTION DATA information current as of publication date. Products conform to specifications per the terms of Texas Instruments standard warranty. Production processing does not necessarily include testing of all parameters.

Copyright © 2003, Texas Instruments Incorporated

description/ordering information (continued)

The ’LVTH543 devices contain two sets of D-type latches for temporary storage of data flowing in either direction. Separate latch-enable ($\overline{LEAB}$ or $\overline{LEBA}$) and output-enable ($\overline{OEAB}$ or $\overline{OEBA}$) inputs are provided for each register, to permit independent control in either direction of data flow.

The A-to-B enable ($\overline{CEAB}$) input must be low to enter data from A or to output data from B. If $\overline{CEAB}$ is low and $\overline{LEAB}$ is low, the A-to-B latches are transparent; a subsequent low-to-high transition of $\overline{LEAB}$ puts the A latches in the storage mode. With $\overline{CEAB}$ and $\overline{OEAB}$ both low, the 3-state B outputs are active and reflect the data present at the output of the A latches. Data flow from B to A is similar, but requires using the $\overline{CEBA}$, $\overline{LEBA}$, and $\overline{OEBA}$ inputs.

Active bus-hold circuitry holds unused or undriven inputs at a valid logic state. Use of pullup or pulldown resistors with the bus-hold circuitry is not recommended.

When V_{CC} is between 0 and 1.5 V, the device is in the high-impedance state during power up or power down. However, to ensure the high-impedance state above 1.5 V, $\overline{OE}$ should be tied to V_{CC} through a pullup resistor; the minimum value of the resistor is determined by the current-sinking capability of the driver.

This device is fully specified for hot-insertion applications using I_{off} and power-up 3-state. The I_{off} circuitry disables the outputs, preventing damaging current backflow through the device when it is powered down. The power-up 3-state circuitry places the outputs in the high-impedance state during power up and power down, which prevents driver conflict.

FUNCTION TABLE†

INPUTS				OUTPUT
$\overline{CEAB}$	$\overline{LEAB}$	$\overline{OEAB}$	A	B
H	X	X	X	Z
X	X	H	X	Z
L	H	L	X	B_0‡
L	L	L	L	L
L	L	L	H	H

† A-to-B data flow is shown; B-to-A flow control is the same, except that it uses $\overline{CEBA}$, $\overline{LEBA}$, and $\overline{OEBA}$.

‡ Output level before the indicated steady-state input conditions were established

logic diagram (positive logic)

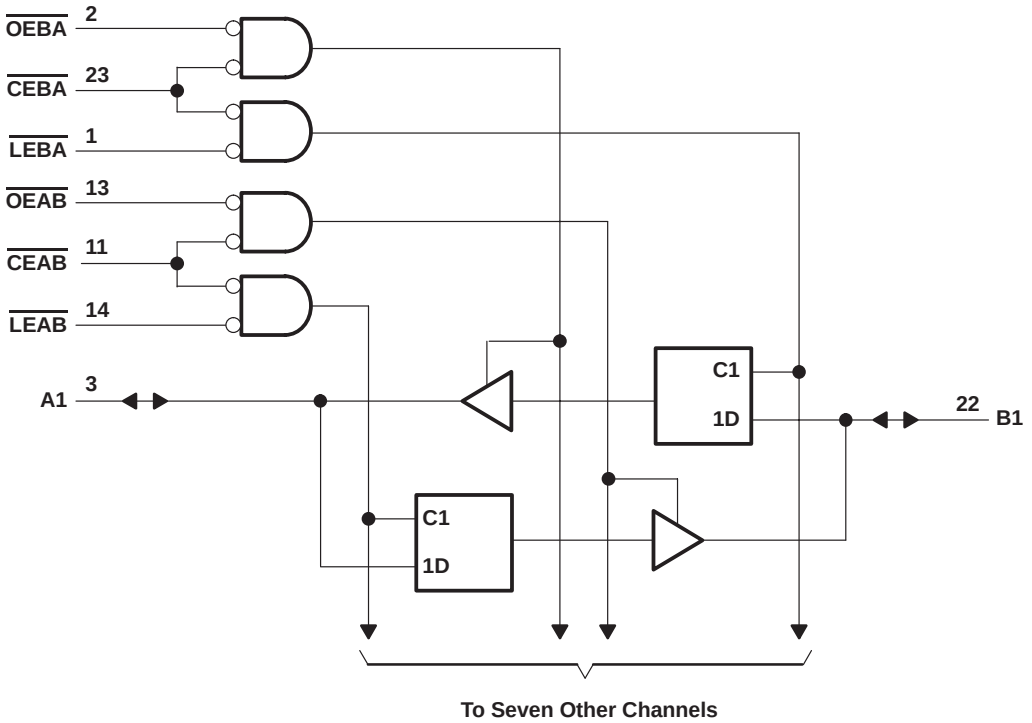

Pin numbers shown are for the DB, DGV, DW, JT, NS, PW, and W packages.

absolute maximum ratings over operating free-air temperature range (unless otherwise noted)†

Supply voltage range, V_{CC}	−0.5 V to 4.6 V
Input voltage range, V_I (see Note 1)	−0.5 V to 7 V
Voltage range applied to any output in the high-impedance or power-off state, V_O (see Note 1)	−0.5 V to 7 V
Voltage range applied to any output in the high state, V_O (see Note 1)	−0.5 V to V_{CC} + 0.5 V
Current into any output in the low state, I_O: SN54LVTH543	96 mA
SN74LVTH543	128 mA
Current into any output in the high state, I_O (see Note 2): SN54LVTH543	48 mA
SN74LVTH543	64 mA
Input clamp current, I_{IK} (V_I < 0)	−50 mA
Output clamp current, I_{OK} (V_O < 0)	−50 mA
Package thermal impedance, θ_{JA} (see Note 3): DB package	63°C/W
DGV package	86°C/W
DW package	46°C/W
NS package	65°C/W
PW package	88°C/W
Storage temperature range, T_{stg}	−65°C to 150°C

† Stresses beyond those listed under “absolute maximum ratings” may cause permanent damage to the device. These are stress ratings only, and functional operation of the device at these or any other conditions beyond those indicated under “recommended operating conditions” is not implied. Exposure to absolute-maximum-rated conditions for extended periods may affect device reliability.

NOTES:
1. The input and output negative-voltage ratings may be exceeded if the input and output clamp-current ratings are observed.
2. This current flows only when the output is in the high state and $V_O > V_{CC}$.
3. The package thermal impedance is calculated in accordance with JESD 51-7.

recommended operating conditions (see Note 4)

			SN54LVTH543		SN74LVTH543		UNIT
			MIN	MAX	MIN	MAX	
V_{CC}	Supply voltage		2.7	3.6	2.7	3.6	V
V_{IH}	High-level input voltage		2		2		V
V_{IL}	Low-level input voltage			0.8		0.8	V
V_I	Input voltage			5.5		5.5	V
I_{OH}	High-level output current			−24		−32	mA
I_{OL}	Low-level output current			48		64	mA
$\Delta t/\Delta v$	Input transition rise or fall rate	Outputs enabled		10		10	ns/V
$\Delta t/\Delta V_{CC}$	Power-up ramp rate		200		200		µs/V
T_A	Operating free-air temperature		−55	125	−40	85	°C

NOTE 4: All unused control inputs of the device must be held at V_{CC} or GND to ensure proper device operation. Refer to the TI application report, *Implications of Slow or Floating CMOS Inputs*, literature number SCBA004.

PRODUCT PREVIEW

PRODUCT PREVIEW information concerns products in the formative or design phase of development. Characteristic data and other specifications are design goals. Texas Instruments reserves the right to change or discontinue these products without notice.

electrical characteristics over recommended operating free-air temperature range (unless otherwise noted)

PARAMETER		TEST CONDITIONS		SN54LVTH543			SN74LVTH543			UNIT
				MIN	TYP†	MAX	MIN	TYP†	MAX	
V_{IK}		V_{CC} = 2.7 V,	I_I = −18 mA			−1.2			−1.2	V
V_{OH}		V_{CC} = 2.7 V to 3.6 V,	I_{OH} = −100 µA	V_{CC}−0.2			V_{CC}−0.2			V
		V_{CC} = 2.7 V,	I_{OH} = −8 mA	2.4			2.4			
		V_{CC} = 3 V	I_{OH} = −24 mA	2						
			I_{OH} = −32 mA				2			
V_{OL}		V_{CC} = 2.7 V	I_{OL} = 100 µA			0.2			0.2	V
			I_{OL} = 24 mA			0.5			0.5	
		V_{CC} = 3 V	I_{OL} = 16 mA			0.4			0.4	
			I_{OL} = 32 mA			0.5			0.5	
			I_{OL} = 48 mA			0.55				
			I_{OL} = 64 mA						0.55	
I_I	Control inputs	V_{CC} = 3.6 V,	V_I = V_{CC} or GND			±1			±1	µA
		V_{CC} = 0 or 3.6 V,	V_I = 5.5 V			10			10	
	A or B ports‡	V_{CC} = 3.6 V	V_I = 5.5 V			20			20	
			V_I = V_{CC}			1			1	
			V_I = 0			−5			−5	
I_{off}		V_{CC} = 0,	V_I or V_O = 0 to 4.5 V						±100	µA
$I_{I(hold)}$	A or B ports	V_{CC} = 3 V	V_I = 0.8 V	75			75			µA
			V_I = 2 V	−75			−75			
		V_{CC} = 3.6 V§	V_I = 0 to 3.6 V						±500	
I_{OZPU}		V_{CC} = 0 to 1.5 V, V_O = 0.5 to 3 V, $\overline{OE}$ = don't care				±100*			±100	µA
I_{OZPD}		V_{CC} = 1.5 V to 0, V_O = 0.5 to 3 V, $\overline{OE}$ = don't care				±100*			±100	µA
I_{CC}		V_{CC} = 3.6 V, I_O = 0, V_I = V_{CC} or GND	Outputs high			0.19			0.19	mA
			Outputs low			5			5	
			Outputs disabled			0.19			0.19	
ΔI_{CC}¶		V_{CC} = 3 V to 3.6 V, One input at V_{CC} − 0.6 V, Other inputs at V_{CC} or GND				0.2			0.2	mA
C_i		V_I = 3 V or 0			4			4		pF
C_{io}		V_O = 3 V or 0			9			9		pF

* On products compliant to MIL-PRF-38535, this parameter is not production tested.
† All typical values are at V_{CC} = 3.3 V, T_A = 25°C.
‡ Unused terminals are at V_{CC} or GND.
§ This is the bus-hold maximum dynamic current. It is the minimum overdrive current required to switch the input from one state to another.
¶ This is the increase in supply current for each input that is at the specified TTL voltage level, rather than V_{CC} or GND.

PRODUCT PREVIEW

PRODUCT PREVIEW information concerns products in the formative or design phase of development. Characteristic data and other specifications are design goals. Texas Instruments reserves the right to change or discontinue these products without notice.

timing requirements over recommended operating free-air temperature range (unless otherwise noted) (see Figure 1)

				SN54LVTH543				SN74LVTH543				UNIT
				V_{CC} = 3.3 V ± 0.3 V		V_{CC} = 2.7 V		V_{CC} = 3.3 V ± 0.3 V		V_{CC} = 2.7 V		
				MIN	MAX	MIN	MAX	MIN	MAX	MIN	MAX	
t_w	Pulse duration,	$\overline{LEAB}$ or $\overline{LEBA}$ low		3.3		3.3		3.3		3.3		ns
t_{su}	Setup time	A or B before $\overline{LEAB}$ or $\overline{LEBA}$↑	Data high	0.4		0.4		0.4		0.4		ns
			Data low	1		1.5		1		1.5		
		A or B before $\overline{CEAB}$ or $\overline{CEBA}$↑	Data high	0.2		0.2		0.2		0.2		
			Data low	0.7		1.2		0.7		1.2		
t_h	Hold time	A or B after $\overline{LEAB}$ or $\overline{LEBA}$↑	Data high	1.5		0.6		1.5		0.6		ns
			Data low	1.3		1.5		1.3		1.5		
		A or B after $\overline{CEAB}$ or $\overline{CEBA}$↑	Data high	1.6		0.5		1.6		0.5		
			Data low	1.4		1.6		1.4		1.6		

switching characteristics over recommended operating free-air temperature range, C_L = 50 pF (unless otherwise noted) (see Figure 1)

PARAMETER	FROM (INPUT)	TO (OUTPUT)	SN54LVTH543				SN74LVTH543					UNIT
			V_{CC} = 3.3 V ± 0.3 V		V_{CC} = 2.7 V		V_{CC} = 3.3 V ± 0.3 V			V_{CC} = 2.7 V		
			MIN	MAX	MIN	MAX	MIN	TYP†	MAX	MIN	MAX	
t_{PLH}	A or B	B or A	1.2	3.9		4.5	1.3	2.5	3.7		4.3	ns
t_{PHL}			1.2	3.9		4.5	1.3	2.5	3.7		4.3	
t_{PLH}	$\overline{LE}$	A or B	1.2	5.1		6.1	1.3	2.9	4.7		5.9	ns
t_{PHL}			1.2	5.1		6.1	1.3	2.9	4.7		5.9	
t_{PZH}	$\overline{OE}$	A or B	1	5.1		6.4	1.1	2.9	4.9		6.2	ns
t_{PZL}			1	5.1		6.4	1.1	3.2	4.9		6.2	
t_{PHZ}	$\overline{OE}$	A or B	1.9	5.6		6.2	2	3.4	5.3		5.9	ns
t_{PLZ}			1.9	5.6		6.2	2	3.7	5.3		5.9	
t_{PZH}	$\overline{CE}$	A or B	1.2	5.5		7	1.3	3.2	5.3		6.8	ns
t_{PZL}			1.2	5.5		7	1.3	3.5	5.3		6.8	
t_{PHZ}	$\overline{CE}$	A or B	2.2	5.7		6.2	2.3	3.8	5.4		5.9	ns
t_{PLZ}			2.2	5.7		5.9	2.3	3.9	5.4		5.6	

† All typical values are at V_{CC} = 3.3 V, T_A = 25°C.

PRODUCT PREVIEW

PRODUCT PREVIEW information concerns products in the formative or design phase of development. Characteristic data and other specifications are design goals. Texas Instruments reserves the right to change or discontinue these products without notice.

PARAMETER MEASUREMENT INFORMATION

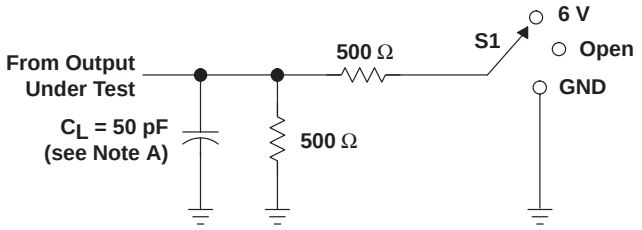

LOAD CIRCUIT

TEST	S1
t_{PLH}/t_{PHL}	Open
t_{PLZ}/t_{PZL}	6 V
t_{PHZ}/t_{PZH}	GND

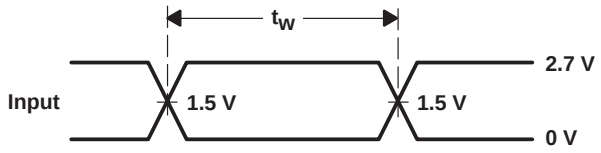

VOLTAGE WAVEFORMS
PULSE DURATION

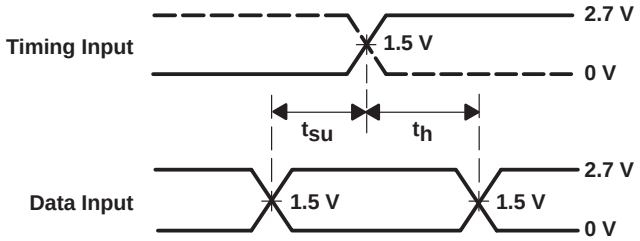

VOLTAGE WAVEFORMS
SETUP AND HOLD TIMES

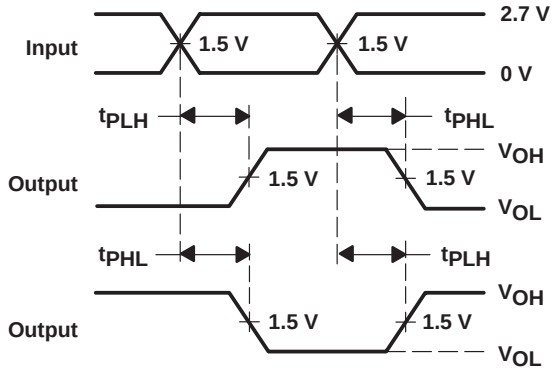

VOLTAGE WAVEFORMS
PROPAGATION DELAY TIMES
INVERTING AND NONINVERTING OUTPUTS

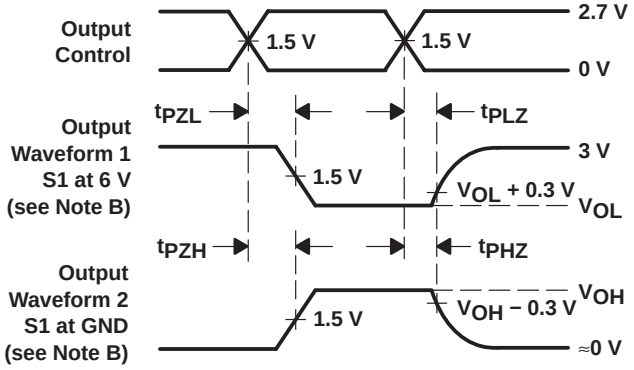

VOLTAGE WAVEFORMS
ENABLE AND DISABLE TIMES
LOW- AND HIGH-LEVEL ENABLING

NOTES: A. C_L includes probe and jig capacitance.
B. Waveform 1 is for an output with internal conditions such that the output is low except when disabled by the output control. Waveform 2 is for an output with internal conditions such that the output is high except when disabled by the output control.
C. All input pulses are supplied by generators having the following characteristics: PRR ≤ 10 MHz, Z_O = 50 Ω, t_r ≤ 2.5 ns, t_f ≤ 2.5 ns.
D. The outputs are measured one at a time with one transition per measurement.
E. All parameters and waveforms are not applicable to all devices.

Figure 1. Load Circuit and Voltage Waveforms

PACKAGING INFORMATION

Orderable Device	Status (1)	Package Type	Package Drawing	Pins	Package Qty	Eco Plan (2)	Lead/Ball Finish (6)	MSL Peak Temp (3)	Op Temp (°C)	Device Marking (4/5)	Samples
SN74LVTH543DBR	ACTIVE	SSOP	DB	24	2000	Green (RoHS & no Sb/Br)	CU NIPDAU	Level-1-260C-UNLIM	-40 to 85	LXH543	Samples
SN74LVTH543DW	ACTIVE	SOIC	DW	24	25	Green (RoHS & no Sb/Br)	CU NIPDAU	Level-1-260C-UNLIM	-40 to 85	LVTH543	Samples
SN74LVTH543DWR	ACTIVE	SOIC	DW	24	2000	Green (RoHS & no Sb/Br)	CU NIPDAU	Level-1-260C-UNLIM	-40 to 85	LVTH543	Samples
SN74LVTH543PW	ACTIVE	TSSOP	PW	24	60	Green (RoHS & no Sb/Br)	CU NIPDAU	Level-1-260C-UNLIM	-40 to 85	LXH543	Samples
SN74LVTH543PWR	ACTIVE	TSSOP	PW	24	2000	Green (RoHS & no Sb/Br)	CU NIPDAU	Level-1-260C-UNLIM	-40 to 85	LXH543	Samples
SN74LVTH543PWRE4	ACTIVE	TSSOP	PW	24	2000	Green (RoHS & no Sb/Br)	CU NIPDAU	Level-1-260C-UNLIM	-40 to 85	LXH543	Samples

(1) The marketing status values are defined as follows:
ACTIVE: Product device recommended for new designs.
LIFEBUY: TI has announced that the device will be discontinued, and a lifetime-buy period is in effect.
NRND: Not recommended for new designs. Device is in production to support existing customers, but TI does not recommend using this part in a new design.
PREVIEW: Device has been announced but is not in production. Samples may or may not be available.
OBSOLETE: TI has discontinued the production of the device.

(2) Eco Plan - The planned eco-friendly classification: Pb-Free (RoHS), Pb-Free (RoHS Exempt), or Green (RoHS & no Sb/Br) - please check http://www.ti.com/productcontent for the latest availability information and additional product content details.
TBD: The Pb-Free/Green conversion plan has not been defined.
Pb-Free (RoHS): TI's terms "Lead-Free" or "Pb-Free" mean semiconductor products that are compatible with the current RoHS requirements for all 6 substances, including the requirement that lead not exceed 0.1% by weight in homogeneous materials. Where designed to be soldered at high temperatures, TI Pb-Free products are suitable for use in specified lead-free processes.
Pb-Free (RoHS Exempt): This component has a RoHS exemption for either 1) lead-based flip-chip solder bumps used between the die and package, or 2) lead-based die adhesive used between the die and leadframe. The component is otherwise considered Pb-Free (RoHS compatible) as defined above.
Green (RoHS & no Sb/Br): TI defines "Green" to mean Pb-Free (RoHS compatible), and free of Bromine (Br) and Antimony (Sb) based flame retardants (Br or Sb do not exceed 0.1% by weight in homogeneous material)

(3) MSL, Peak Temp. - The Moisture Sensitivity Level rating according to the JEDEC industry standard classifications, and peak solder temperature.

(4) There may be additional marking, which relates to the logo, the lot trace code information, or the environmental category on the device.

(5) Multiple Device Markings will be inside parentheses. Only one Device Marking contained in parentheses and separated by a "~" will appear on a device. If a line is indented then it is a continuation of the previous line and the two combined represent the entire Device Marking for that device.

(6) Lead/Ball Finish - Orderable Devices may have multiple material finish options. Finish options are separated by a vertical ruled line. Lead/Ball Finish values may wrap to two lines if the finish value exceeds the maximum column width.

Important Information and Disclaimer: The information provided on this page represents TI's knowledge and belief as of the date that it is provided. TI bases its knowledge and belief on information provided by third parties, and makes no representation or warranty as to the accuracy of such information. Efforts are underway to better integrate information from third parties. TI has taken and continues to take reasonable steps to provide representative and accurate information but may not have conducted destructive testing or chemical analysis on incoming materials and chemicals. TI and TI suppliers consider certain information to be proprietary, and thus CAS numbers and other limited information may not be available for release.

In no event shall TI's liability arising out of such information exceed the total purchase price of the TI part(s) at issue in this document sold by TI to Customer on an annual basis.

OTHER QUALIFIED VERSIONS OF SN74LVTH543 :

- Enhanced Product: SN74LVTH543-EP

NOTE: Qualified Version Definitions:

- Enhanced Product - Supports Defense, Aerospace and Medical Applications

TAPE AND REEL INFORMATION

REEL DIMENSIONS

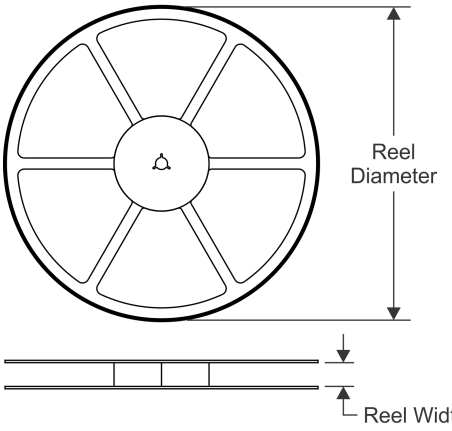

TAPE DIMENSIONS

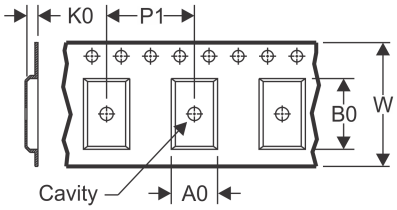

A0	Dimension designed to accommodate the component width
B0	Dimension designed to accommodate the component length
K0	Dimension designed to accommodate the component thickness
W	Overall width of the carrier tape
P1	Pitch between successive cavity centers

QUADRANT ASSIGNMENTS FOR PIN 1 ORIENTATION IN TAPE

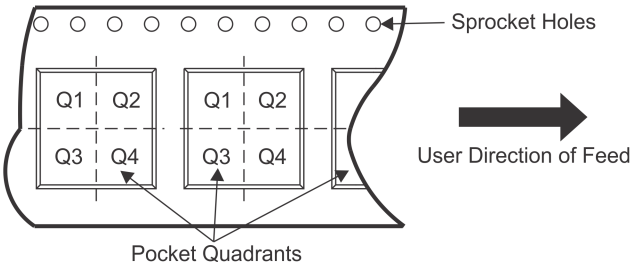

*All dimensions are nominal

Device	Package Type	Package Drawing	Pins	SPQ	Reel Diameter (mm)	Reel Width W1 (mm)	A0 (mm)	B0 (mm)	K0 (mm)	P1 (mm)	W (mm)	Pin1 Quadrant
SN74LVTH543DBR	SSOP	DB	24	2000	330.0	16.4	8.2	8.8	2.5	12.0	16.0	Q1
SN74LVTH543DWR	SOIC	DW	24	2000	330.0	24.4	10.75	15.7	2.7	12.0	24.0	Q1
SN74LVTH543PWR	TSSOP	PW	24	2000	330.0	16.4	6.95	8.3	1.6	8.0	16.0	Q1

TAPE AND REEL BOX DIMENSIONS

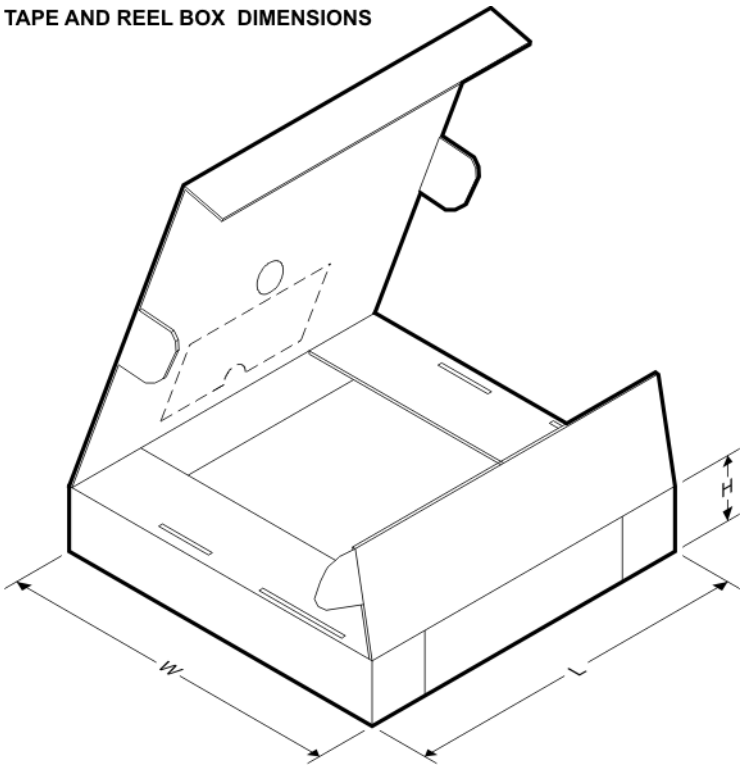

*All dimensions are nominal

Device	Package Type	Package Drawing	Pins	SPQ	Length (mm)	Width (mm)	Height (mm)
SN74LVTH543DBR	SSOP	DB	24	2000	367.0	367.0	38.0
SN74LVTH543DWR	SOIC	DW	24	2000	350.0	350.0	43.0
SN74LVTH543PWR	TSSOP	PW	24	2000	367.0	367.0	38.0

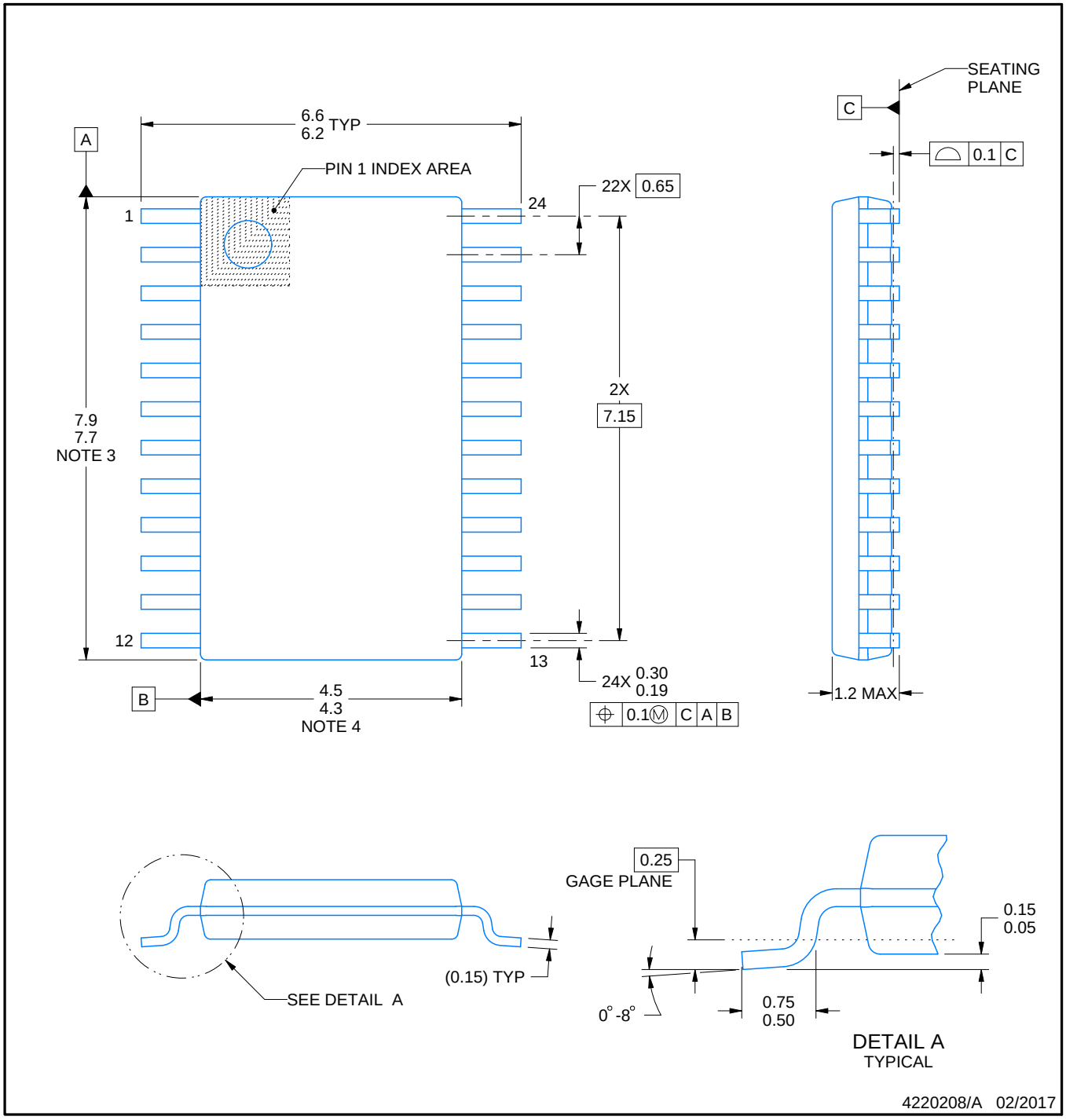

NOTES:

1. All linear dimensions are in millimeters. Any dimensions in parenthesis are for reference only. Dimensioning and tolerancing per ASME Y14.5M.
2. This drawing is subject to change without notice.
3. This dimension does not include mold flash, protrusions, or gate burrs. Mold flash, protrusions, or gate burrs shall not exceed 0.15 mm per side.
4. This dimension does not include interlead flash. Interlead flash shall not exceed 0.25 mm per side.
5. Reference JEDEC registration MO-153.

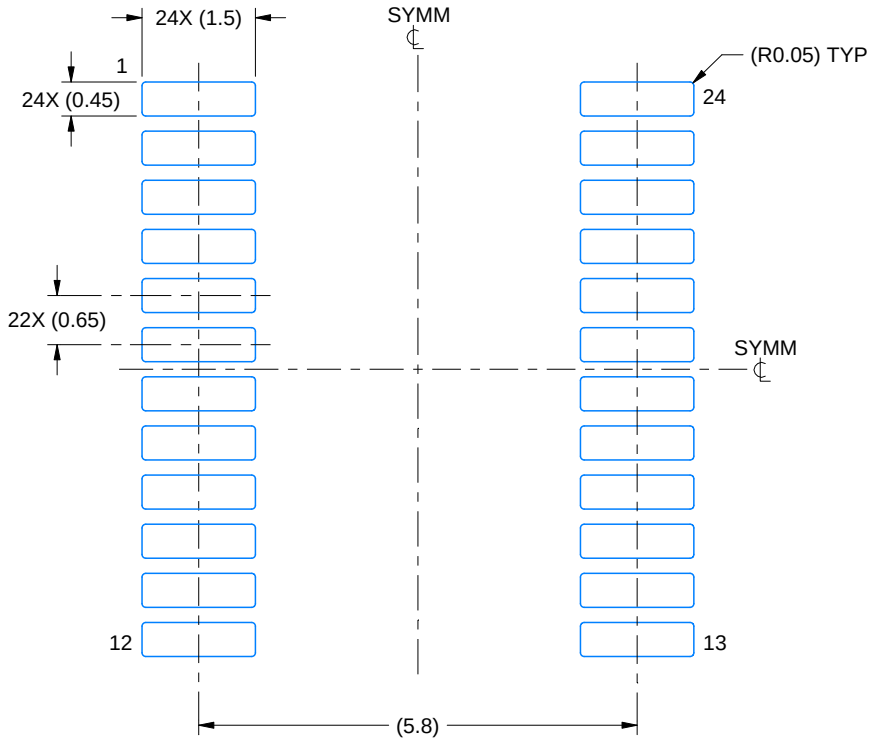

LAND PATTERN EXAMPLE
EXPOSED METAL SHOWN
SCALE: 10X

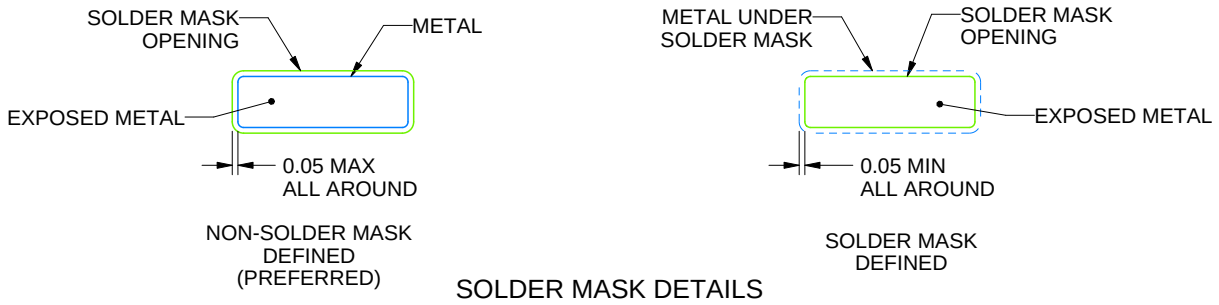

SOLDER MASK DETAILS

4220208/A 02/2017

NOTES: (continued)

6. Publication IPC-7351 may have alternate designs.
7. Solder mask tolerances between and around signal pads can vary based on board fabrication site.

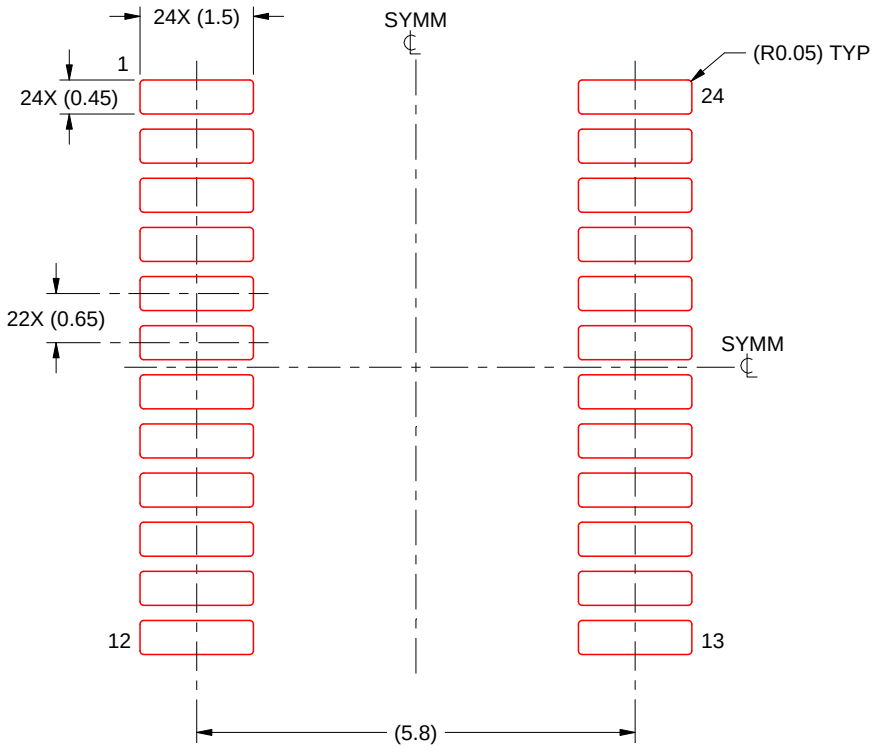

SOLDER PASTE EXAMPLE
BASED ON 0.125 mm THICK STENCIL
SCALE: 10X

4220208/A 02/2017

NOTES: (continued)

8. Laser cutting apertures with trapezoidal walls and rounded corners may offer better paste release. IPC-7525 may have alternate design recommendations.
9. Board assembly site may have different recommendations for stencil design.

DW (R–PDSO–G24) PLASTIC SMALL OUTLINE

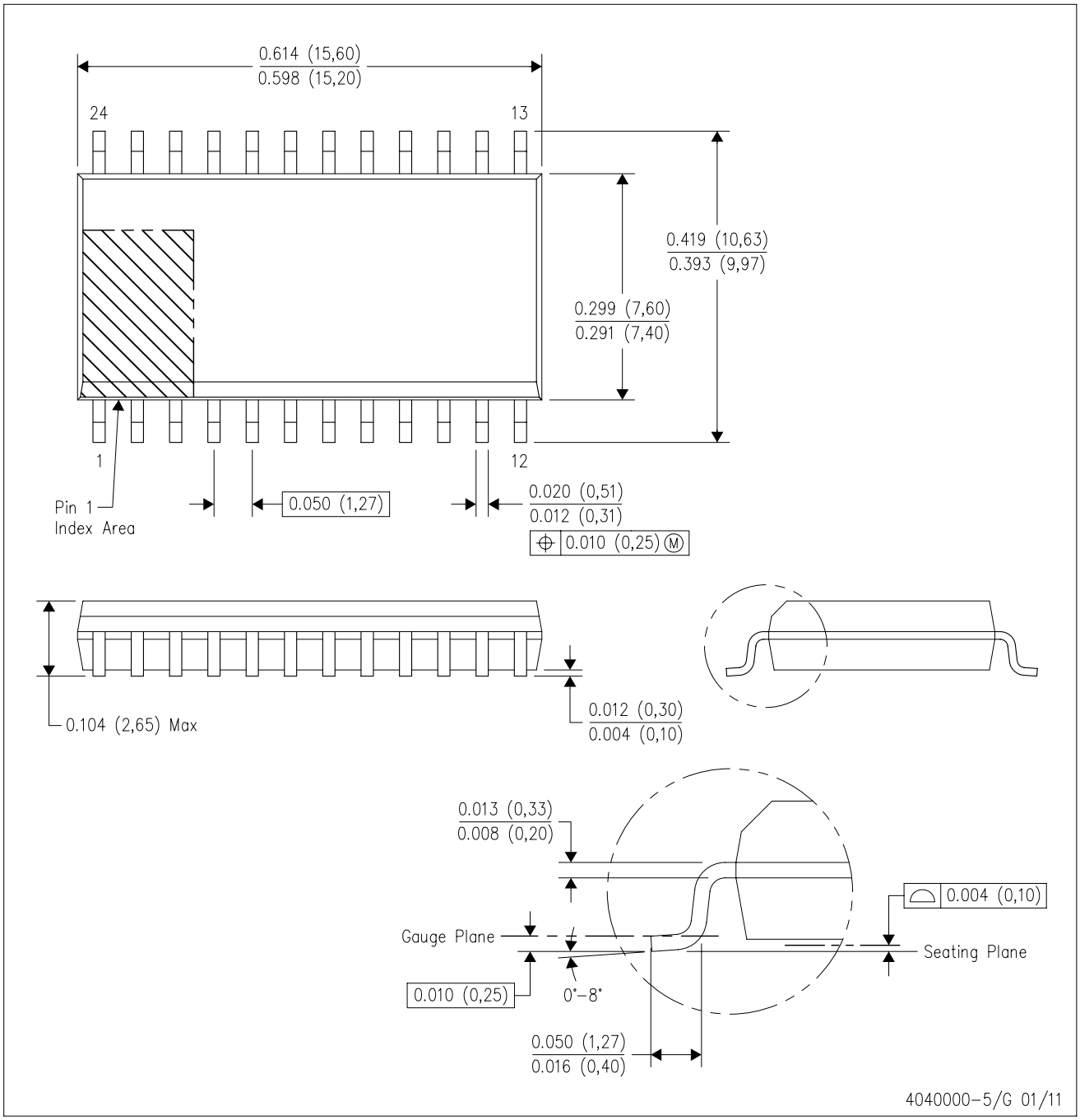

NOTES:
A. All linear dimensions are in inches (millimeters). Dimensioning and tolerancing per ASME Y14.5M–1994.
B. This drawing is subject to change without notice.
C. Body dimensions do not include mold flash or protrusion not to exceed 0.006 (0,15).
D. Falls within JEDEC MS–013 variation AD.

DW (R–PDSO–G24) PLASTIC SMALL OUTLINE

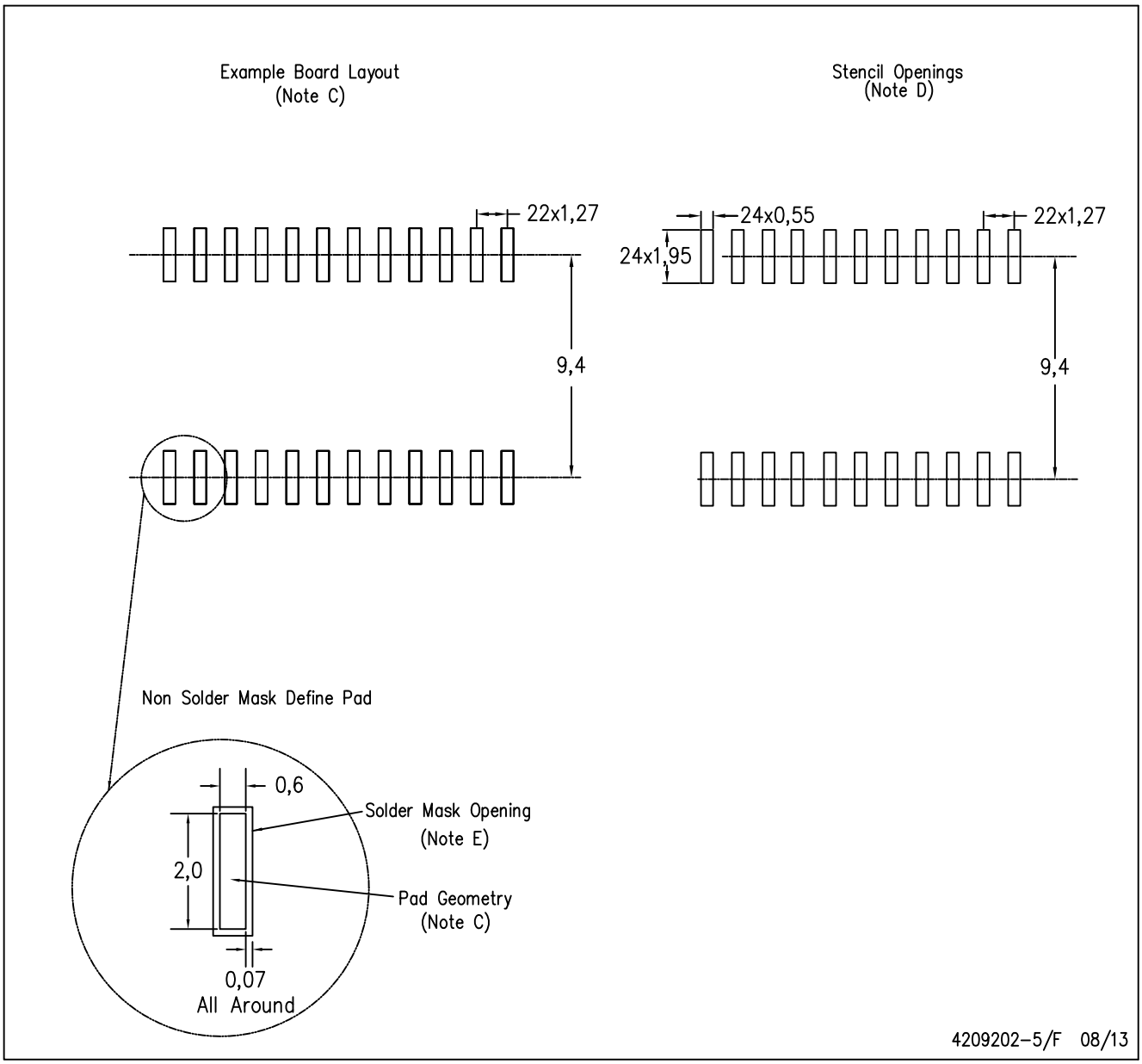

NOTES:
A. All linear dimensions are in millimeters.
B. This drawing is subject to change without notice.
C. Refer to IPC7351 for alternate board design.
D. Laser cutting apertures with trapezoidal walls and also rounding corners will offer better paste release. Customers should contact their board assembly site for stencil design recommendations. Refer to IPC–7525
E. Customers should contact their board fabrication site for solder mask tolerances between and around signal pads.

DB (R-PDSO-G)** **PLASTIC SMALL-OUTLINE**

28 PINS SHOWN

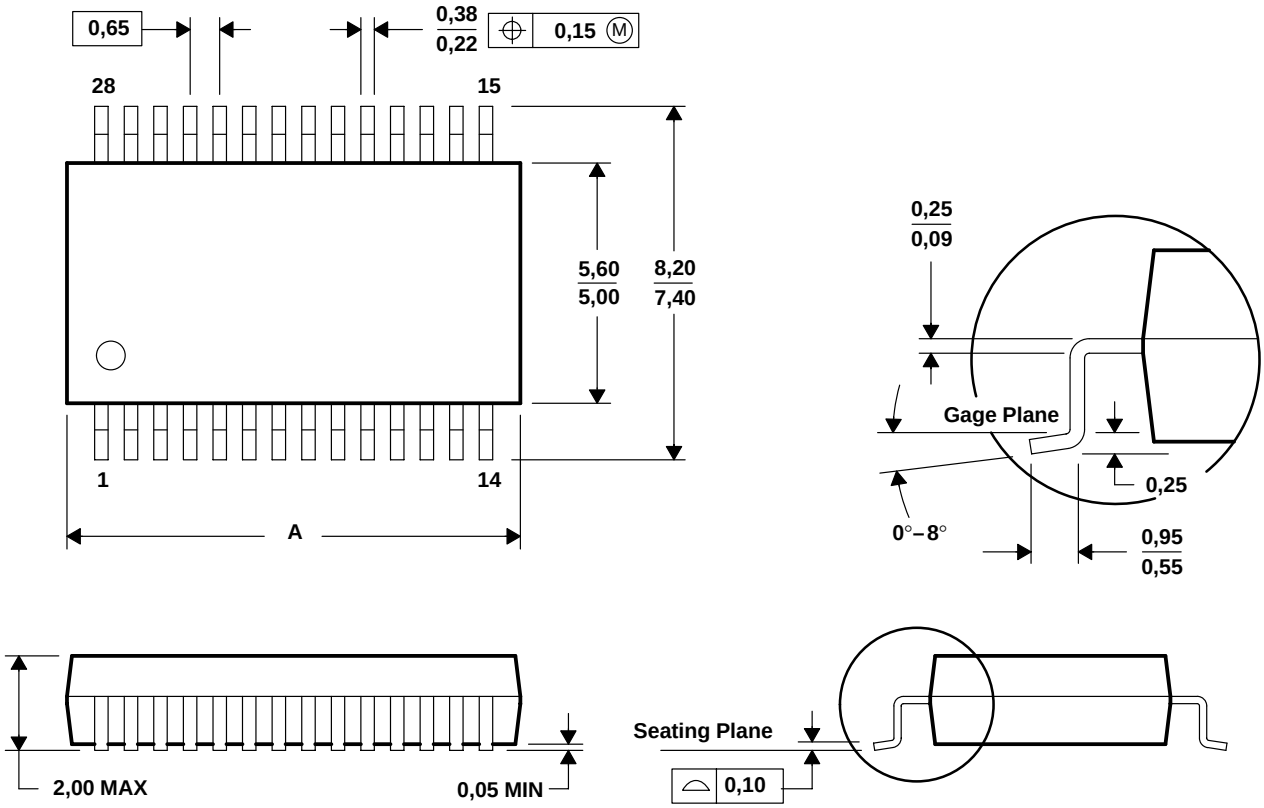

DIM \ PINS **	14	16	20	24	28	30	38
A MAX	6,50	6,50	7,50	8,50	10,50	10,50	12,90
A MIN	5,90	5,90	6,90	7,90	9,90	9,90	12,30

4040065 /E 12/01

NOTES: A. All linear dimensions are in millimeters.
B. This drawing is subject to change without notice.
C. Body dimensions do not include mold flash or protrusion not to exceed 0,15.
D. Falls within JEDEC MO-150

IMPORTANT NOTICE AND DISCLAIMER

TI PROVIDES TECHNICAL AND RELIABILITY DATA (INCLUDING DATASHEETS), DESIGN RESOURCES (INCLUDING REFERENCE DESIGNS), APPLICATION OR OTHER DESIGN ADVICE, WEB TOOLS, SAFETY INFORMATION, AND OTHER RESOURCES “AS IS” AND WITH ALL FAULTS, AND DISCLAIMS ALL WARRANTIES, EXPRESS AND IMPLIED, INCLUDING WITHOUT LIMITATION ANY IMPLIED WARRANTIES OF MERCHANTABILITY, FITNESS FOR A PARTICULAR PURPOSE OR NON-INFRINGEMENT OF THIRD PARTY INTELLECTUAL PROPERTY RIGHTS.

These resources are intended for skilled developers designing with TI products. You are solely responsible for (1) selecting the appropriate TI products for your application, (2) designing, validating and testing your application, and (3) ensuring your application meets applicable standards, and any other safety, security, or other requirements. These resources are subject to change without notice. TI grants you permission to use these resources only for development of an application that uses the TI products described in the resource. Other reproduction and display of these resources is prohibited. No license is granted to any other TI intellectual property right or to any third party intellectual property right. TI disclaims responsibility for, and you will fully indemnify TI and its representatives against, any claims, damages, costs, losses, and liabilities arising out of your use of these resources.

TI’s products are provided subject to TI’s Terms of Sale (www.ti.com/legal/termsofsale.html) or other applicable terms available either on ti.com or provided in conjunction with such TI products. TI’s provision of these resources does not expand or otherwise alter TI’s applicable warranties or warranty disclaimers for TI products.

Mailing Address: Texas Instruments, Post Office Box 655303, Dallas, Texas 75265
Copyright © 2019, Texas Instruments Incorporated

Looking for pricing, stock, or lifecycle information?

Click below to explore more details on WIN SOURCE:

- View SN74LVTH543PWR on WIN SOURCE
- Texas Instruments Information

Optimize Your Supply Chain with WIN SOURCE Solutions

- Global Sourcing Solution
- Obsolete Management
- Cost Control Management
- Shortage Management
- Alternative Solution
- Excess Inventory Management