THE DATASHEET OF

SN74LVC244ARGYR

www.win-source.net 0086-755-83957316

SN74LVC244A Octal Buffer or Driver With 3-State Outputs

1 Features

- Operates From 1.65 V to 3.6 V
- Inputs Accept Voltages to 5.5 V
- Specified From –40°C to +85°C and –40°C to +125°C
- Maximum t_{pd} of 5.9 ns at 3.3 V
- Typical V_{OLP} (Output Ground Bounce) < 0.8 V at V_{CC} = 3.3 V, T_A = 25°C
- Typical V_{OHV} (Output V_{OH} Undershoot) > 2 V at V_{CC} = 3.3 V, T_A = 25°C
- Supports Mixed-Mode Signal Operation on All Ports (5-V Input or Output Voltage With 3.3-V V_{CC})
- I_{off} Supports Live Insertion, Partial-Power-Down Mode, and Back-Drive Protection
- Can Be Used as a Down Translator to Translate Inputs From a Maximum of 5.5 V Down to the V_{CC} Level
- Available in Ultra Small Logic QFN Package (0.5 mm Maximum Height)
- Latch-Up Performance Exceeds 250 mA Per JESD 17
- ESD Protection Exceeds JESD 22
  - 2000-V Human-Body Model
  - 1000-V Charged-Device Model

2 Applications

- Servers
- LED Displays
- Network Switches
- Telecom Infrastructure
- Motor Drivers
- I/O Expanders

3 Description

These octal bus buffers are designed for 1.65-V to 3.6-V VCC operation. The SN74LVC244A devices are designed for asynchronous communication between data buses.

Device Information

PART NUMBER	PACKAGE	BODY SIZE (NOM)
SN74LVC244AN	PDIP (20)	25.40 mm × 6.35 mm
SN74LVC244ANS	SO (20)	12.60 mm × 5.30 mm
SN74LVC244ADB	SSOP (20)	7.50 mm × 5.30 mm
SN74LVC244ADGV	TVSOP (20)	5.00 mm × 4.40 mm
SN74LVC244ADW	SOIC (20)	12.80 mm × 7.50 mm
SN74LVC244ARGY	VQFN (20)	4.50 mm × 3.50 mm
SN74LVC244AZQN	BGA (20)	3.00 mm × 4.00 mm
SN74LVC244APW	TSSOP (20)	6.50 mm × 4.40 mm
SN74LVC244ARWP	X1QFN (20)	2.50 mm × 3.30 mm

(1) For all available packages, see the orderable addendum at the end of the data sheet.

Logic Diagram (Positive Logic)

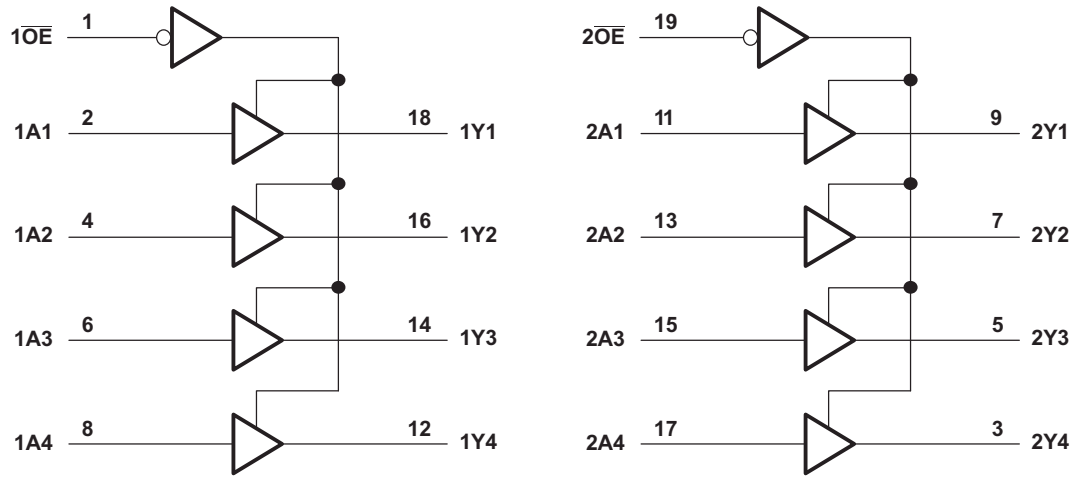

Pin numbers shown are for the DB, DGV, DW, N, NS, PW, and RGY packages.

An IMPORTANT NOTICE at the end of this data sheet addresses availability, warranty, changes, use in safety-critical applications, intellectual property matters and other important disclaimers. PRODUCTION DATA.

Table of Contents

1 Features ... 1
2 Applications ... 1
3 Description ... 1
4 Revision History ... 2
5 Pin Configuration and Functions ... 3
6 Specifications ... 4
6.1 Absolute Maximum Ratings ... 4
6.2 ESD Ratings ... 5
6.3 Recommended Operating Conditions ... 5
6.4 Thermal Information ... 5
6.5 Electrical Characteristics ... 6
6.6 Switching Characteristics ... 6
6.7 Operating Characteristics ... 7
6.8 Typical Characteristics ... 7
7 Parameter Measurement Information ... 8
8 Detailed Description ... 9
8.1 Overview ... 9
8.2 Functional Block Diagram ... 9
8.3 Feature Description ... 9
8.4 Device Functional Modes ... 9
9 Application and Implementation ... 10
9.1 Application Information ... 10
9.2 Typical Application ... 10
10 Power Supply Recommendations ... 11
11 Layout ... 11
11.1 Layout Guidelines ... 11
11.2 Layout Example ... 11
12 Device and Documentation Support ... 12
12.1 Receiving Notification of Documentation Updates 12
12.2 Community Resources ... 12
12.3 Trademarks ... 12
12.4 Electrostatic Discharge Caution ... 12
12.5 Glossary ... 12
13 Mechanical, Packaging, and Orderable Information ... 12

4 Revision History

NOTE: Page numbers for previous revisions may differ from page numbers in the current version.

Changes from Revision AA (June 2016) to Revision AB	Page
• Changed A2 to A4 for 2$\overline{OE}$ in *Pin Functions* table	4
• Added ambient temperature, T_A for BGA package and all other packages in *Recommended Operating Conditions*	5
• Added *Receiving Notification of Documentation Updates* section	12

Changes from Revision Z (January 2015) to Revision AA	Page
• Updated *Device Information* table to show all available packages	1
• Added RWP Package	3
• Deleted GQN package from *Pin Functions* table	4
• Added RWP thermal information to *Thermal Information* table and updated all thermal information for existing packages	5
• Updated all values for ZQN column in *Thermal Information* table	5
• Added package type in *Thermal Information* table	5
• Added RWP thermal information to *Thermal Information* table and updated all thermal information for existing packages	6
• Updated all values for ZQN column in *Thermal Information* table	6
• Added package type in *Thermal Information* table	6

Changes from Revision Y (September 2010) to Revision Z	Page
• Added *Applications*, *Device Information* table, *Pin Functions* table, *ESD Ratings* table, *Thermal Information* table, *Typical Characteristics*, *Feature Description* section, *Device Functional Modes*, *Application and Implementation* section, *Power Supply Recommendations* section, *Layout* section, *Device and Documentation Support* section, and *Mechanical, Packaging, and Orderable Information* section.	1
• Deleted *Ordering Information* table, see *Mechanical, Packaging, and Orderable Information* at the end of the datasheet	1
• Updated *Features*.	1

Copyright © 1992–2016, Texas Instruments Incorporated

5 Pin Configuration and Functions

ZQN Package
20-Pin BGA
Top View

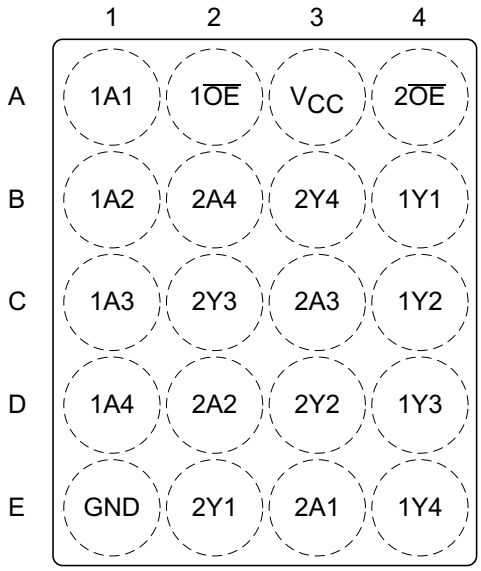

Not to scale

DB, DGV, DW, N, NS, and PW Packages
20-Pin SSOP, TVSOP, SOIC, PDIP, SO, and TSSOP
Front View

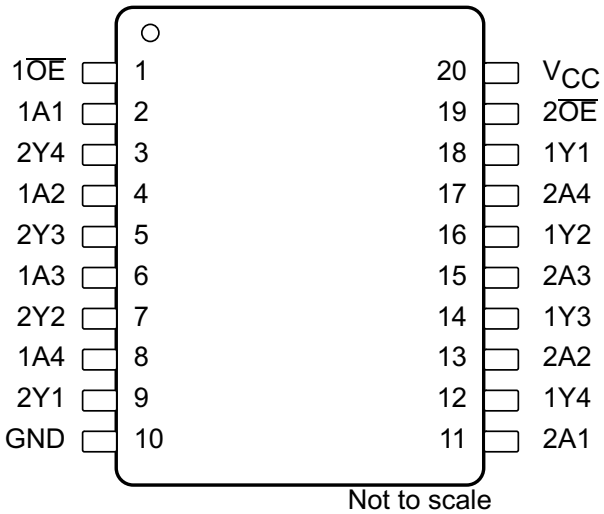

Not to scale

RGY Package
20-Pin VQFN
Top View

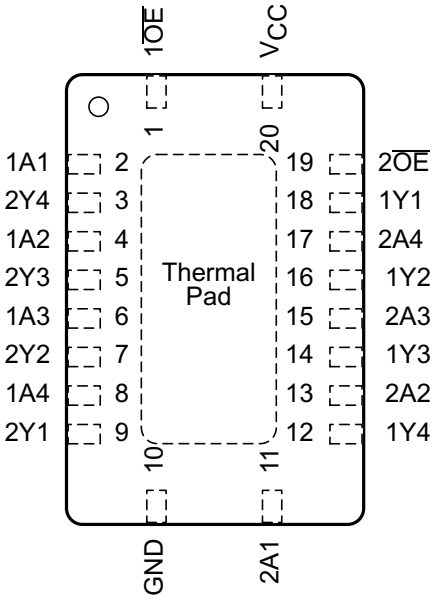

Not to scale

RWP Package
20-Pin X1QFN
Top View

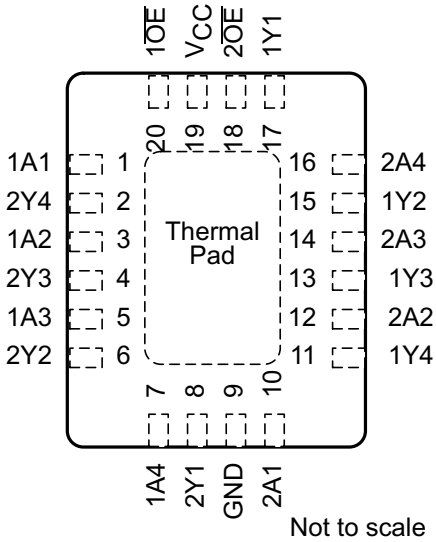

Not to scale

TI recommends to connect the exposed thermal pad to ground for best thermal performance. Must not be connected to any other pin than ground.

Pin Functions

PIN				TYPE	DESCRIPTION
NAME	DB, DGV, DW, N, NS, PW, and RGY	ZQN	RWP		
1A1	2	A1	1	I	Port 1 A1 input
1A2	4	B1	3	I	Port 1 A2 input
1A3	6	C1	5	I	Port 1 A3 input
1A4	8	D1	7	I	Port 1 A4 input
$1\overline{OE}$	1	A2	20	I	Output enable
1Y1	18	B4	17	O	Port 1 Y1 output
1Y2	16	C4	15	O	Port 1 Y2 output
1Y3	14	D4	13	O	Port 1 Y3 output
1Y4	12	E4	11	O	Port 1 Y4 output
2A1	11	E3	10	I	Port 2 A1 input
2A2	13	D2	12	I	Port 2 A2 input
2A3	15	C3	14	I	Port 2 A3 input
2A4	17	B2	16	I	Port 2 A4 input
$2\overline{OE}$	19	A4	18	I	Output enable
2Y1	9	E2	8	O	Port 2 Y1 output
2Y2	7	D3	6	O	Port 2 Y2 output
2Y3	5	C2	4	O	Port 2 Y3 output
2Y4	3	B3	2	O	Port 2 Y4 output
GND	10	E1	9	—	Ground
V_{CC}	20	A3	19	—	Power pin

6 Specifications

6.1 Absolute Maximum Ratings

over operating free-air temperature range (unless otherwise noted)[1]

			MIN	MAX	UNIT
V_{CC}	Supply voltage		–0.5	6.5	V
V_I	Input voltage[2]		–0.5	6.5	V
V_O	Voltage range applied to any output in the high-impedance or power-off state[2]		–0.5	6.5	V
V_O	Voltage range applied to any output in the high or low state[2][3]		–0.5	V_{CC} + 0.5	V
I_{IK}	Input clamp current	$V_I < 0$		–50	mA
I_{OK}	Output clamp current	$V_O < 0$		–50	mA
I_O	Continuous output current			±50	mA
	Continuous current through V_{CC} or GND			±100	mA
P_{tot}	Power dissipation	T_A = –40°C to +125°C[4][5]		500	mW
T_J	Junction temperature			150	°C
T_{stg}	Storage temperature		–65	150	°C

(1) Stresses beyond those listed under *Absolute Maximum Ratings* may cause permanent damage to the device. These are stress ratings only, and functional operation of the device at these or any other conditions beyond those indicated under *Recommended Operating Conditions* is not implied. Exposure to absolute-maximum-rated conditions for extended periods may affect device reliability.
(2) The input and output negative-voltage ratings may be exceeded if the input and output current ratings are observed.
(3) The value of V_{CC} is provided in the *Recommended Operating Conditions* table.
(4) For the DW package: above 70°C the value of P_{tot} derates linearly with 8 mW/K.
(5) For the DB, DGV, N, NS, and PW packages: above 60°C the value of P_{tot} derates linearly with 5.5 mW/K.

Copyright © 1992–2016, Texas Instruments Incorporated

6.2 ESD Ratings

			VALUE	UNIT
$V_{(ESD)}$	Electrostatic discharge	Human-body model (HBM), per ANSI/ESDA/JEDEC JS-001 (1)	±2000	V
		Charged-device model (CDM), per JEDEC specification JESD22-C101 (2)	±1000	

(1) JEDEC document JEP155 states that 500-V HBM allows safe manufacturing with a standard ESD control process.
(2) JEDEC document JEP157 states that 250-V CDM allows safe manufacturing with a standard ESD control process.

6.3 Recommended Operating Conditions

over recommended operating free-air temperature range (unless otherwise noted) (1)

			T_A = 25°C		–40 TO +85°C		–40 TO +125°C		UNIT
			MIN	MAX	MIN	MAX	MIN	MAX	
V_{CC}	Supply voltage	Operating	1.65	3.6	1.65	3.6	1.65	3.6	V
		Data retention only	1.5		1.5		1.5		
V_{IH}	High-level input voltage	V_{CC} = 1.65 V to 1.95 V	0.65 × V_{CC}		0.65 × V_{CC}		0.65 × V_{CC}		V
		V_{CC} = 2.3 V to 2.7 V	1.7		1.7		1.7		
		V_{CC} = 2.7 V to 3.6 V	2		2		2		
V_{IL}	Low-level input voltage	V_{CC} = 1.65 V to 1.95 V		0.35 × V_{CC}		0.35 × V_{CC}		0.35 × V_{CC}	V
		V_{CC} = 2.3 V to 2.7 V		0.7		0.7		0.7	
		V_{CC} = 2.7 V to 3.6 V		0.8		0.8		0.8	
V_I	Input voltage		0	5.5	0	5.5	0	5.5	V
V_O	Output voltage		0	V_{CC}	0	V_{CC}	0	V_{CC}	V
I_{OH}	High-level output current	V_{CC} = 1.65 V		–4		–4		–4	mA
		V_{CC} = 2.3 V		–8		–8		–8	
		V_{CC} = 2.7 V		–12		–12		–12	
		V_{CC} = 3 V		–24		–24		–24	
I_{OL}	Low-level output current	V_{CC} = 1.65 V		4		4		4	mA
		V_{CC} = 2.3 V		8		8		8	
		V_{CC} = 2.7 V		12		12		12	
		V_{CC} = 3 V		24		24		24	
T_A	Ambient temperature	BGA package			–40	85			°C
		All other packages					–40	125	

(1) All unused inputs of the device must be held at V_{CC} or GND to ensure proper device operation. See *Implications of Slow or Floating CMOS Inputs*, SCBA004.

6.4 Thermal Information

THERMAL METRIC (1)		SN74LVC244A									UNIT
		DB (2) (SSOP)	DGV (2) (TVSOP)	DW (2) (SOIC)	ZQN (2) (BGA)	N (2) (PDIP)	NS (2) (SO)	PW (2) (TSSOP)	RGY (3) (VQFN)	RWP (3) (X1QFN)	
		20 PINS									
$R_{\theta JA}$	Junction-to-ambient thermal resistance	108.1	128.7	90.9	198.7	61.6	90.1	114.7	50.3	79.9	°C/W
$R_{\theta JC(top)}$	Junction-to-case (top) thermal resistance	70.2	43.7	55.3	106.8	46.5	56.4	48.4	58.4	63.2	°C/W
$R_{\theta JB}$	Junction-to-board thermal resistance	63.3	70.2	58.8	143.1	42.5	57.7	65.6	28.3	46.4	°C/W
ψ_{JT}	Junction-to-top characterization parameter	30.6	3.1	29.1	24.1	34.6	28.4	6.8	4.9	2.6	°C/W
ψ_{JB}	Junction-to-board characterization parameter	62.9	69.5	58.3	119.6	42.4	57.2	65.1	28.4	46.3	°C/W

(1) For more information about traditional and new thermal metrics, see the *Semiconductor and IC Package Thermal Metrics* application report.
(2) The package thermal impedance is calculated in accordance with JESD 51-7.
(3) The package thermal impedance is calculated in accordance with JESD 51-5.

Copyright © 1992–2016, Texas Instruments Incorporated

Thermal Information (continued)

THERMAL METRIC[1]		SN74LVC244A									UNIT
		DB[2] (SSOP)	DGV[2] (TVSOP)	DW[2] (SOIC)	ZQN[2] (BGA)	N[2] (PDIP)	NS[2] (SO)	PW[2] (TSSOP)	RGY[3] (VQFN)	RWP[3] (X1QFN)	
		20 PINS									
$R_{\theta JC(bot)}$	Junction-to-case (bottom) thermal resistance	—	—	—	n/a	—	—	—	22.7	27.3	°C/W

6.5 Electrical Characteristics

over recommended operating free-air temperature range (unless otherwise noted)

PARAMETER	TEST CONDITIONS		V_{CC}	T_A = 25°C			–40 TO +85°C		–40 TO +125°C		UNIT
				MIN	TYP	MAX	MIN	MAX	MIN	MAX	
V_{OH}	I_{OH} = –100 µA		1.65 V to 3.6 V	V_{CC} – 0.2			V_{CC} – 0.2		V_{CC} – 0.3		V
	I_{OH} = –4 mA		1.65 V	1.29			1.2		1.05		
	I_{OH} = –8 mA		2.3 V	1.9			1.7		1.55		
	I_{OH} = –12 mA		2.7 V	2.2			2.2		2.05		
			3 V	2.4			2.4		2.25		
	I_{OH} = –24 mA		3 V	2.3			2.2		2		
V_{OL}	I_{OL} = 100 µA		1.65 V to 3.6 V			0.1		0.2		0.3	V
	I_{OL} = 4 mA		1.65 V			0.24		0.45		0.6	
	I_{OL} = 8 mA		2.3 V			0.3		0.7		0.75	
	I_{OL} = 12 mA		2.7 V			0.4		0.4		0.6	
	I_{OL} = 24 mA		3 V			0.55		0.55		0.8	
I_I	V_I = 5.5 V or GND		3.6 V			±1		±5		±20	µA
I_{off}	V_I or V_O = 5.5 V		0			±1		±10		±20	µA
I_{OZ}	V_O = 0 to 5.5 V		3.6 V			±1		±10		±20	µA
I_{CC}	V_I = V_{CC} or GND	I_O = 0	3.6 V			1		10		40	µA
	3.6 V ≤ V_I ≤ 5.5 V[1]					1		10		40	
ΔI_{CC}	One input at V_{CC} – 0.6 V, Other inputs at V_{CC} or GND		2.7 V to 3.6 V			500		500		5000	µA
C_i	V_I = V_{CC} or GND		3.3 V		4						pF
C_o	V_O = V_{CC} or GND		3.3 V		5.5						pF

(1) This applies in the disabled state only.

6.6 Switching Characteristics

over recommended operating free-air temperature range (unless otherwise noted) (see Figure 3)

PARAMETER	FROM (INPUT)	TO (OUTPUT)	V_{CC}	T_A = 25°C			–40 TO +85°C		–40 TO +125°C		UNIT
				MIN	TYP	MAX	MIN	MAX	MIN	MAX	
t_{pd}	A	Y	1.5 V	1	7	14.4	1	14.9	1	16.4	ns
			1.8 V ± 0.15 V	1	5.9	10.4	1	10.9	1	12.4	
			2.5 V ± 0.2 V	1	4.2	7.4	1	7.9	1	10	
			2.7 V	1	4.2	6.7	1	6.9	1	8.2	
			3.3 V ± 0.3 V	1.5	3.9	5.7	1.5	5.9	1.5	7.2	

Copyright © 1992–2016, Texas Instruments Incorporated

Switching Characteristics (continued)

over recommended operating free-air temperature range (unless otherwise noted) (see Figure 3)

PARAMETER	FROM (INPUT)	TO (OUTPUT)	V_{CC}	T_A = 25°C			–40 TO +85°C		–40 TO +125°C		UNIT
				MIN	TYP	MAX	MIN	MAX	MIN	MAX	
t_{en}	$\overline{OE}$	Y	1.5 V	1	8.3	17.8	1	18.3	1	19.8	ns
			1.8 V ± 0.15 V	1	6.4	12.1	1	12.6	1	14.1	
			2.5 V ± 0.2 V	1	4.6	9.1	1	9.6	1	11.7	
			2.7 V	1	5	8.4	1	8.6	1	10.3	
			3.3 V ± 0.3 V	1.5	4.5	7.4	1.5	7.6	1.5	9.4	
t_{dis}	$\overline{OE}$	Y	1.5 V	1	7.2	15.6	1	16.1	1	17.6	ns
			1.8 V ± 0.15 V	1	5.8	11.6	1	12.1	1	13.6	
			2.5 V ± 0.2 V	1	3.7	7.3	1	7.8	1	9.9	
			2.7 V	1	3.8	6.6	1	6.8	1	8.6	
			3.3 V ± 0.3 V	1.5	3.8	6.3	1.5	6.5	1.5	8	
$t_{sk(o)}$			3.3 V ± 0.3 V					1		1.5	ns

6.7 Operating Characteristics

T_A = 25°C

PARAMETER			TEST CONDITIONS	V_{CC}	TYP	UNIT
C_{pd}	Power dissipation capacitance per buffer/driver	Outputs enabled	f = 10 MHz	1.8 V	43	pF
				2.5 V	43	
				3.3 V	44	
		Outputs disabled	f = 10 MHz	1.8 V	1	
				2.5 V	1	
				3.3 V	2	

6.8 Typical Characteristics

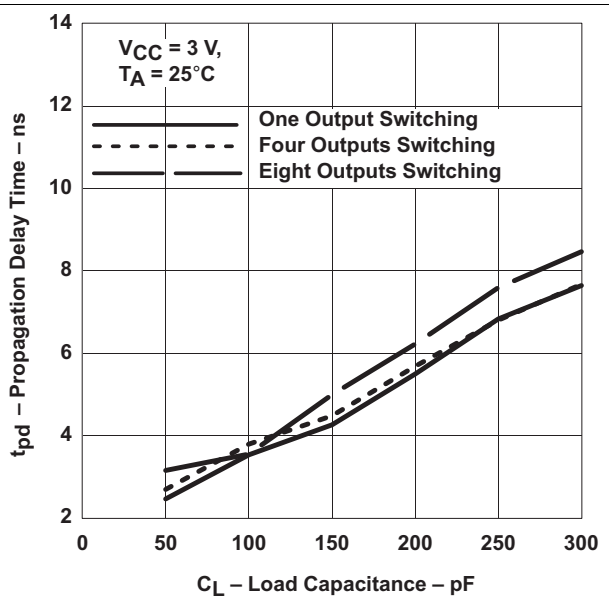

Figure 1. Propagation Delay (Low to High Transition) vs Load Capacitance

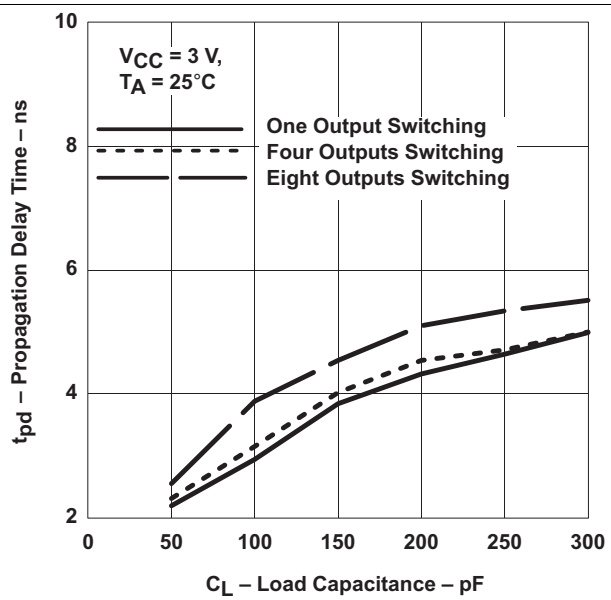

Figure 2. Propagation Delay (High to Low Transition) vs Load Capacitance

7 Parameter Measurement Information

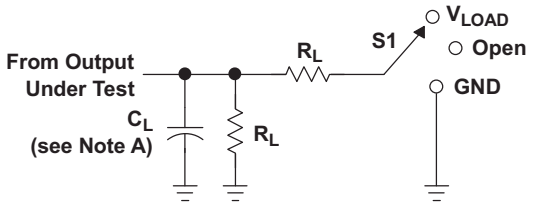

LOAD CIRCUIT

TEST	S1
t_{PLH}/t_{PHL}	Open
t_{PLZ}/t_{PZL}	V_{LOAD}
t_{PHZ}/t_{PZH}	GND

V_{CC}	INPUTS		V_M	V_{LOAD}	C_L	R_L	V_Δ
	V_I	t_r/t_f					
1.5 V	V_{CC}	≤2 ns	$V_{CC}/2$	2 × V_{CC}	15 pF	2 kΩ	0.1 V
1.8 V ± 0.15 V	V_{CC}	≤2 ns	$V_{CC}/2$	2 × V_{CC}	30 pF	1 kΩ	0.15 V
2.5 V ± 0.2 V	V_{CC}	≤2 ns	$V_{CC}/2$	2 × V_{CC}	30 pF	500 Ω	0.15 V
2.7 V	2.7 V	≤2.5 ns	1.5 V	6 V	50 pF	500 Ω	0.3 V
3.3 V ± 0.3 V	2.7 V	≤2.5 ns	1.5 V	6 V	50 pF	500 Ω	0.3 V

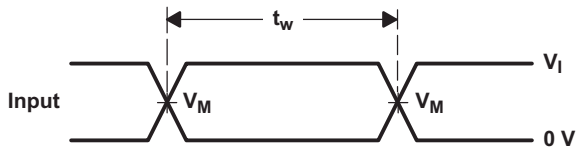

VOLTAGE WAVEFORMS
PULSE DURATION

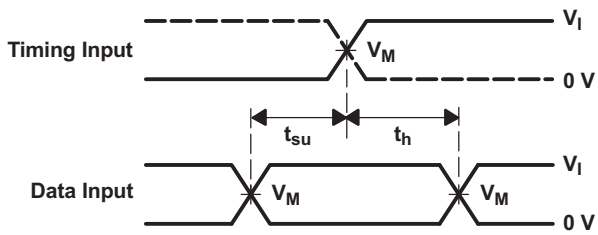

VOLTAGE WAVEFORMS
SETUP AND HOLD TIMES

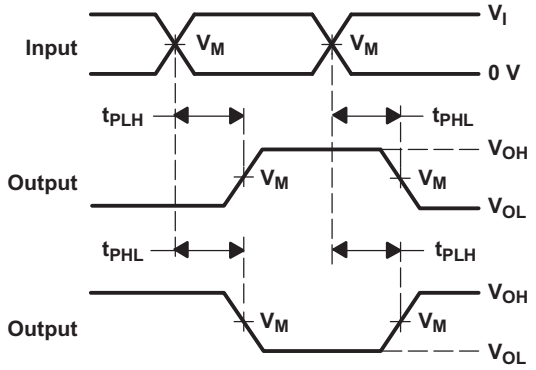

VOLTAGE WAVEFORMS
PROPAGATION DELAY TIMES
INVERTING AND NONINVERTING OUTPUTS

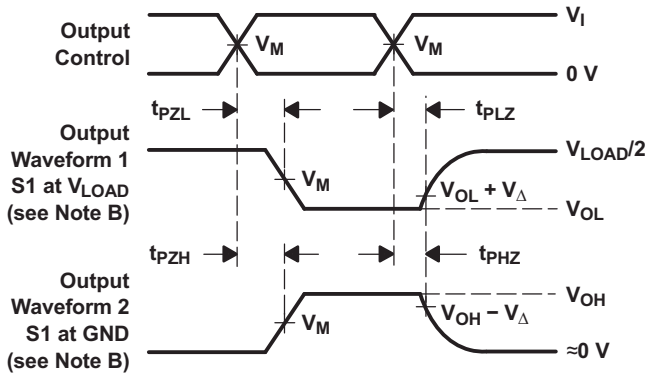

VOLTAGE WAVEFORMS
ENABLE AND DISABLE TIMES
LOW- AND HIGH-LEVEL ENABLING

NOTES: A. C_L includes probe and jig capacitance.
B. Waveform 1 is for an output with internal conditions such that the output is low, except when disabled by the output control. Waveform 2 is for an output with internal conditions such that the output is high, except when disabled by the output control.
C. All input pulses are supplied by generators having the following characteristics: PRR≤ 10 MHz, Z_O = 50 Ω.
D. The outputs are measured one at a time, with one transition per measurement.
E. t_{PLZ} and t_{PHZ} are the same as t_{dis}.
F. t_{PZL} and t_{PZH} are the same as t_{en}.
G. t_{PLH} and t_{PHL} are the same as t_{pd}.
H. All parameters and waveforms are not applicable to all devices.

Figure 3. Load Circuit and Voltage Waveforms

Copyright © 1992–2016, Texas Instruments Incorporated

8 Detailed Description

8.1 Overview

The SN74LVC244A device is organized as two 4-bit buffers/line drivers with separate output-enable ($\overline{OE}$) inputs. The device passes data from the A inputs to the Y outputs when $\overline{OE}$ is low. The outputs are in the high-impedance state when $\overline{OE}$ is high. $\overline{OE}$ should be tied to V_{CC} through a pullup resistor to ensure the high-impedance state during power up or power down; the minimum value of the resistor is determined by the current-sinking capability of the driver.

8.2 Functional Block Diagram

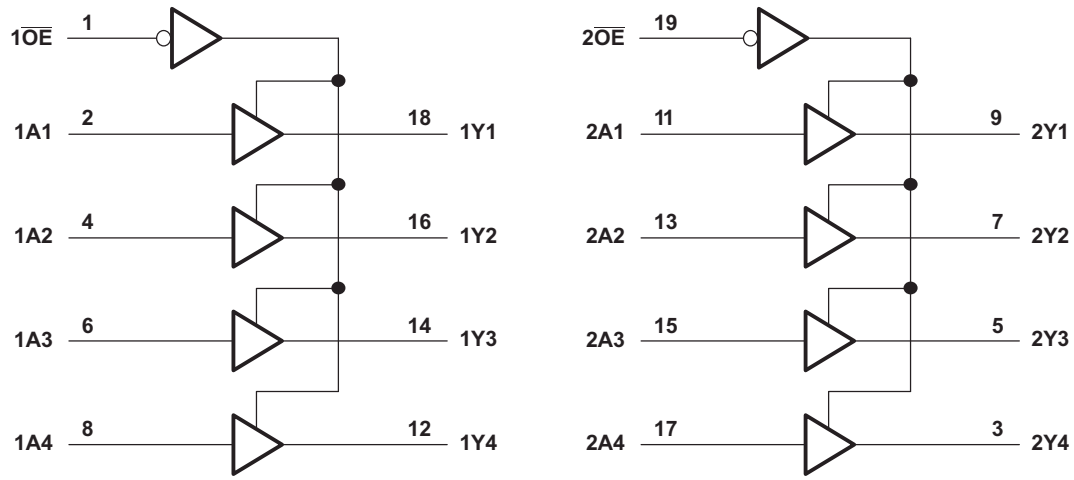

Pin numbers shown are for the DB, DGV, DW, N, NS, PW, and RGY packages.

Figure 4. Logic Diagram (Positive Logic)

8.3 Feature Description

- Allows down voltage translation
  - 5 V to 3.3 V
  - 5 V or 3.3 V to 1.8 V
- Inputs accept voltage levels up to 5.5 V
- It is available in ultra small logic 20 pin QFN package at 0.5 mm max height with 0.4 mm pitch.

8.4 Device Functional Modes

Table 1 lists the functional modes of the SN74LVC244A.

Table 1. Function Table

INPUTS		OUTPUT Y
$\overline{OE}$	A	
L	H	H
L	L	L
H	X	Hi-Z

9 Application and Implementation

NOTE

Information in the following applications sections is not part of the TI component specification, and TI does not warrant its accuracy or completeness. TI's customers are responsible for determining suitability of components for their purposes. Customers should validate and test their design implementation to confirm system functionality.

9.1 Application Information

SN74LVC244A is a high drive CMOS device that can be used for a multitude of bus interface type applications where output drive or PCB trace length is a concern. The inputs can accept voltages to 5.5 V at any valid V_{CC} making it ideal for down translation.

9.2 Typical Application

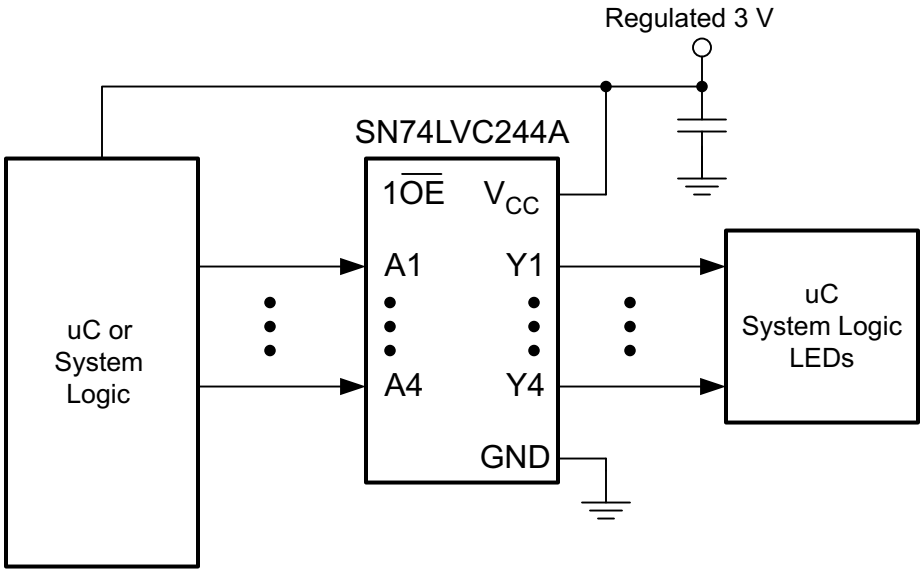

Figure 5. Application Schematic

9.2.1 Design Requirements

This device uses CMOS technology and has balanced output drive. Avoid bus contention because it can drive currents in excess of maximum limits. The high drive will also create fast edges into light loads, so consider routing and load conditions to prevent ringing.

9.2.2 Detailed Design Procedure

1. Recommended Input Conditions:
   - For rise time and fall time specification, see ($\Delta t/\Delta V$) in the *Recommended Operating Conditions* table.
   - For specified high and low levels, see (V_{IH} and V_{IL}) in the *Recommended Operating Conditions* table.
   - Inputs are overvoltage tolerant allowing them to go as high as (V_I max) in the *Recommended Operating Conditions* table at any valid V_{CC}.
2. Recommended maximum Output Conditions:
   - Load currents should not exceed (I_O max) per output and should not exceed (Continuous current through V_{CC} or GND) total current for the part. These limits are located in the *Absolute Maximum Ratings* table.
   - Outputs should not be pulled above V_{CC}.

Copyright © 1992–2016, Texas Instruments Incorporated

Typical Application (continued)

9.2.3 Application Curves

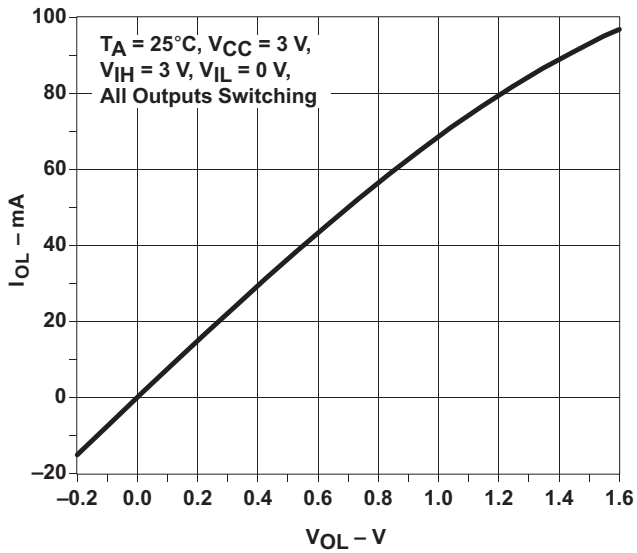

Figure 6. Output Drive Current (I_{OL}) vs LOW-level Output Voltage (V_{OL})

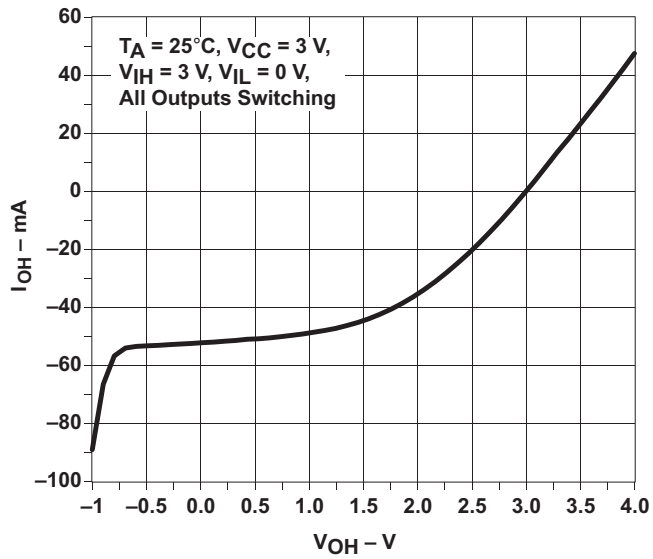

Figure 7. Output Drive Current (I_{OH}) vs HIGH-level Output Voltage (V_{OH})

10 Power Supply Recommendations

The power supply may be any voltage between the MIN and MAX supply voltage rating located in the *Recommended Operating Conditions* table.

Each V_{CC} terminal should have a good bypass capacitor to prevent power disturbance. A 0.1 μF capacitor is recommended for devices with a single supply. If there are multiple V_{CC} terminals, then 0.01 μF or 0.022 μF capacitors are recommended for each power terminal. It is permissible to parallel multiple bypass capacitors to reject different frequencies of noise. Multiple bypass capacitors may be paralleled to reject different frequencies of noise. The bypass capacitor should be installed as close to the power terminal as possible for the best results.

11 Layout

11.1 Layout Guidelines

Inputs should not float when using multiple bit logic devices. In many cases, functions or parts of functions of digital logic devices are unused. Some examples include situations when only two inputs of a triple-input AND gate are used, or when only 3 of the 4-buffer gates are used. Such input pins should not be left unconnected because the undefined voltages at the outside connections result in undefined operational states.

Specified in Figure 8 are rules that must be observed under all circumstances. All unused inputs of digital logic devices must be connected to a high or low bias to prevent them from floating. The logic level that should be applied to any particular unused input depends on the function of the device. Generally, they will be tied to GND or V_{CC}, whichever makes more sense or is more convenient.

11.2 Layout Example

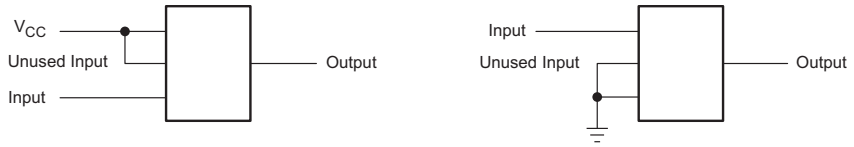

Figure 8. Layout Diagram

12 Device and Documentation Support

12.1 Receiving Notification of Documentation Updates

To receive notification of documentation updates, navigate to the device product folder on ti.com. In the upper right corner, click on *Alert me* to register and receive a weekly digest of any product information that has changed. For change details, review the revision history included in any revised document.

12.2 Community Resources

The following links connect to TI community resources. Linked contents are provided "AS IS" by the respective contributors. They do not constitute TI specifications and do not necessarily reflect TI's views; see TI's Terms of Use.

TI E2E™ Online Community ***TI's Engineer-to-Engineer (E2E) Community.*** Created to foster collaboration among engineers. At e2e.ti.com, you can ask questions, share knowledge, explore ideas and help solve problems with fellow engineers.

Design Support ***TI's Design Support*** Quickly find helpful E2E forums along with design support tools and contact information for technical support.

12.3 Trademarks

E2E is a trademark of Texas Instruments.
All other trademarks are the property of their respective owners.

12.4 Electrostatic Discharge Caution

These devices have limited built-in ESD protection. The leads should be shorted together or the device placed in conductive foam during storage or handling to prevent electrostatic damage to the MOS gates.

12.5 Glossary

SLYZ022 — *TI Glossary*.

This glossary lists and explains terms, acronyms, and definitions.

13 Mechanical, Packaging, and Orderable Information

The following pages include mechanical packaging and orderable information. This information is the most current data available for the designated devices. This data is subject to change without notice and revision of this document. For browser based versions of this data sheet, refer to the left hand navigation.

Copyright © 1992–2016, Texas Instruments Incorporated

PACKAGING INFORMATION

Orderable Device	Status (1)	Package Type	Package Drawing	Pins	Package Qty	Eco Plan (2)	Lead/Ball Finish (6)	MSL Peak Temp (3)	Op Temp (°C)	Device Marking (4/5)	Samples
SN74LVC244ADBR	ACTIVE	SSOP	DB	20	2000	Green (RoHS & no Sb/Br)	CU NIPDAU	Level-1-260C-UNLIM	-40 to 125	LC244A	Samples
SN74LVC244ADBRE4	ACTIVE	SSOP	DB	20	2000	Green (RoHS & no Sb/Br)	CU NIPDAU	Level-1-260C-UNLIM	-40 to 125	LC244A	Samples
SN74LVC244ADBRG4	ACTIVE	SSOP	DB	20	2000	Green (RoHS & no Sb/Br)	CU NIPDAU	Level-1-260C-UNLIM	-40 to 125	LC244A	Samples
SN74LVC244ADGVR	ACTIVE	TVSOP	DGV	20	2000	Green (RoHS & no Sb/Br)	CU NIPDAU	Level-1-260C-UNLIM	-40 to 125	LC244A	Samples
SN74LVC244ADW	ACTIVE	SOIC	DW	20	25	Green (RoHS & no Sb/Br)	CU NIPDAU	Level-1-260C-UNLIM	-40 to 125	LVC244A	Samples
SN74LVC244ADWE4	ACTIVE	SOIC	DW	20	25	Green (RoHS & no Sb/Br)	CU NIPDAU	Level-1-260C-UNLIM	-40 to 125	LVC244A	Samples
SN74LVC244ADWG4	ACTIVE	SOIC	DW	20	25	Green (RoHS & no Sb/Br)	CU NIPDAU	Level-1-260C-UNLIM	-40 to 125	LVC244A	Samples
SN74LVC244ADWR	ACTIVE	SOIC	DW	20	2000	Green (RoHS & no Sb/Br)	CU NIPDAU | CU SN	Level-1-260C-UNLIM	-40 to 125	LVC244A	Samples
SN74LVC244ADWRG4	ACTIVE	SOIC	DW	20	2000	Green (RoHS & no Sb/Br)	CU NIPDAU	Level-1-260C-UNLIM	-40 to 125	LVC244A	Samples
SN74LVC244AN	ACTIVE	PDIP	N	20	20	Pb-Free (RoHS)	CU NIPDAU	N / A for Pkg Type	-40 to 125	SN74LVC244AN	Samples
SN74LVC244ANSR	ACTIVE	SO	NS	20	2000	Green (RoHS & no Sb/Br)	CU NIPDAU	Level-1-260C-UNLIM	-40 to 125	LVC244A	Samples
SN74LVC244APW	ACTIVE	TSSOP	PW	20	70	Green (RoHS & no Sb/Br)	CU NIPDAU	Level-1-260C-UNLIM	-40 to 125	LC244A	Samples
SN74LVC244APWE4	ACTIVE	TSSOP	PW	20	70	Green (RoHS & no Sb/Br)	CU NIPDAU	Level-1-260C-UNLIM	-40 to 125	LC244A	Samples
SN74LVC244APWG4	ACTIVE	TSSOP	PW	20	70	Green (RoHS & no Sb/Br)	CU NIPDAU	Level-1-260C-UNLIM	-40 to 125	LC244A	Samples
SN74LVC244APWR	ACTIVE	TSSOP	PW	20	2000	Green (RoHS & no Sb/Br)	CU NIPDAU | CU SN	Level-1-260C-UNLIM	-40 to 125	LC244A	Samples
SN74LVC244APWRE4	ACTIVE	TSSOP	PW	20	2000	Green (RoHS & no Sb/Br)	CU NIPDAU	Level-1-260C-UNLIM	-40 to 125	LC244A	Samples
SN74LVC244APWRG3	ACTIVE	TSSOP	PW	20	2000	Green (RoHS & no Sb/Br)	CU SN	Level-1-260C-UNLIM	-40 to 125	LC244A	Samples

Orderable Device	Status (1)	Package Type	Package Drawing	Pins	Package Qty	Eco Plan (2)	Lead/Ball Finish (6)	MSL Peak Temp (3)	Op Temp (°C)	Device Marking (4/5)	Samples
SN74LVC244APWRG4	ACTIVE	TSSOP	PW	20	2000	Green (RoHS & no Sb/Br)	CU NIPDAU	Level-1-260C-UNLIM	-40 to 125	LC244A	Samples
SN74LVC244APWT	ACTIVE	TSSOP	PW	20	250	Green (RoHS & no Sb/Br)	CU NIPDAU	Level-1-260C-UNLIM	-40 to 125	LC244A	Samples
SN74LVC244APWTE4	ACTIVE	TSSOP	PW	20	250	Green (RoHS & no Sb/Br)	CU NIPDAU	Level-1-260C-UNLIM	-40 to 125	LC244A	Samples
SN74LVC244APWTG4	ACTIVE	TSSOP	PW	20	250	Green (RoHS & no Sb/Br)	CU NIPDAU	Level-1-260C-UNLIM	-40 to 125	LC244A	Samples
SN74LVC244ARGYR	ACTIVE	VQFN	RGY	20	3000	Green (RoHS & no Sb/Br)	CU NIPDAU	Level-2-260C-1 YEAR	-40 to 125	LC244A	Samples
SN74LVC244ARGYRG4	ACTIVE	VQFN	RGY	20	3000	Green (RoHS & no Sb/Br)	CU NIPDAU	Level-2-260C-1 YEAR	-40 to 125	LC244A	Samples
SN74LVC244ARWPR	ACTIVE	X1QFN	RWP	20	2000	Green (RoHS & no Sb/Br)	CU NIPDAU	Level-1-260C-UNLIM	-40 to 125	LC244A	Samples
SN74LVC244AZQNR	ACTIVE	BGA MICROSTAR JUNIOR	ZQN	20	1000	Green (RoHS & no Sb/Br)	SNAGCU	Level-1-260C-UNLIM	-40 to 85	LC244A	Samples

(1) The marketing status values are defined as follows:
ACTIVE: Product device recommended for new designs.
LIFEBUY: TI has announced that the device will be discontinued, and a lifetime-buy period is in effect.
NRND: Not recommended for new designs. Device is in production to support existing customers, but TI does not recommend using this part in a new design.
PREVIEW: Device has been announced but is not in production. Samples may or may not be available.
OBSOLETE: TI has discontinued the production of the device.

(2) **RoHS:** TI defines "RoHS" to mean semiconductor products that are compliant with the current EU RoHS requirements for all 10 RoHS substances, including the requirement that RoHS substance do not exceed 0.1% by weight in homogeneous materials. Where designed to be soldered at high temperatures, "RoHS" products are suitable for use in specified lead-free processes. TI may reference these types of products as "Pb-Free".
RoHS Exempt: TI defines "RoHS Exempt" to mean products that contain lead but are compliant with EU RoHS pursuant to a specific EU RoHS exemption.
Green: TI defines "Green" to mean the content of Chlorine (Cl) and Bromine (Br) based flame retardants meet JS709B low halogen requirements of <=1000ppm threshold. Antimony trioxide based flame retardants must also meet the <=1000ppm threshold requirement.

(3) MSL, Peak Temp. - The Moisture Sensitivity Level rating according to the JEDEC industry standard classifications, and peak solder temperature.

(4) There may be additional marking, which relates to the logo, the lot trace code information, or the environmental category on the device.

(5) Multiple Device Markings will be inside parentheses. Only one Device Marking contained in parentheses and separated by a "~" will appear on a device. If a line is indented then it is a continuation of the previous line and the two combined represent the entire Device Marking for that device.

(6) Lead/Ball Finish - Orderable Devices may have multiple material finish options. Finish options are separated by a vertical ruled line. Lead/Ball Finish values may wrap to two lines if the finish value exceeds the maximum column width.

Important Information and Disclaimer: The information provided on this page represents TI's knowledge and belief as of the date that it is provided. TI bases its knowledge and belief on information provided by third parties, and makes no representation or warranty as to the accuracy of such information. Efforts are underway to better integrate information from third parties. TI has taken and continues to take reasonable steps to provide representative and accurate information but may not have conducted destructive testing or chemical analysis on incoming materials and chemicals. TI and TI suppliers consider certain information to be proprietary, and thus CAS numbers and other limited information may not be available for release.

In no event shall TI's liability arising out of such information exceed the total purchase price of the TI part(s) at issue in this document sold by TI to Customer on an annual basis.

OTHER QUALIFIED VERSIONS OF SN74LVC244A :

- Automotive: SN74LVC244A-Q1

NOTE: Qualified Version Definitions:

- Automotive - Q100 devices qualified for high-reliability automotive applications targeting zero defects

TAPE AND REEL INFORMATION

REEL DIMENSIONS

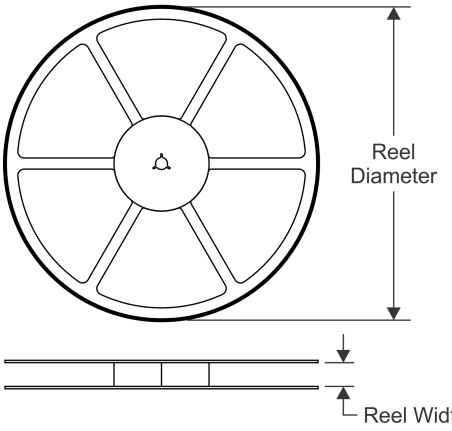

TAPE DIMENSIONS

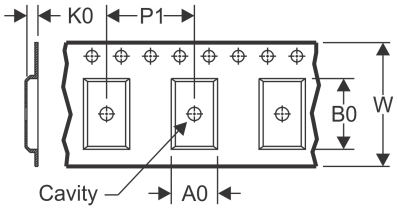

A0	Dimension designed to accommodate the component width
B0	Dimension designed to accommodate the component length
K0	Dimension designed to accommodate the component thickness
W	Overall width of the carrier tape
P1	Pitch between successive cavity centers

QUADRANT ASSIGNMENTS FOR PIN 1 ORIENTATION IN TAPE

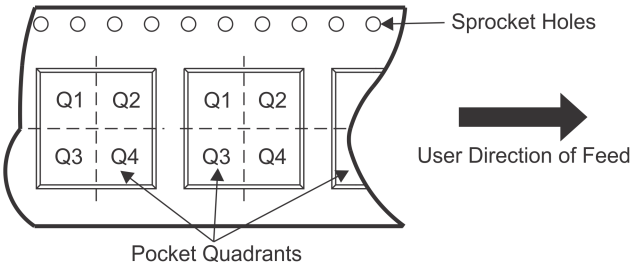

*All dimensions are nominal

Device	Package Type	Package Drawing	Pins	SPQ	Reel Diameter (mm)	Reel Width W1 (mm)	A0 (mm)	B0 (mm)	K0 (mm)	P1 (mm)	W (mm)	Pin1 Quadrant
SN74LVC244ADBR	SSOP	DB	20	2000	330.0	16.4	8.2	7.5	2.5	12.0	16.0	Q1
SN74LVC244ADGVR	TVSOP	DGV	20	2000	330.0	12.4	6.9	5.6	1.6	8.0	12.0	Q1
SN74LVC244ADWR	SOIC	DW	20	2000	330.0	24.4	10.8	13.3	2.7	12.0	24.0	Q1
SN74LVC244ADWR	SOIC	DW	20	2000	330.0	24.4	10.8	13.3	2.7	12.0	24.0	Q1
SN74LVC244ADWRG4	SOIC	DW	20	2000	330.0	24.4	10.8	13.3	2.7	12.0	24.0	Q1
SN74LVC244ANSR	SO	NS	20	2000	330.0	24.4	8.4	13.0	2.5	12.0	24.0	Q1
SN74LVC244APWR	TSSOP	PW	20	2000	330.0	16.4	6.95	7.1	1.6	8.0	16.0	Q1
SN74LVC244APWRG3	TSSOP	PW	20	2000	330.0	16.4	6.95	7.1	1.6	8.0	16.0	Q1
SN74LVC244ARGYR	VQFN	RGY	20	3000	330.0	12.4	3.8	4.8	1.6	8.0	12.0	Q1
SN74LVC244ARWPR	X1QFN	RWP	20	2000	178.0	13.5	2.85	3.65	0.75	8.0	12.0	Q1
SN74LVC244AZQNR	BGA MICROSTAR JUNIOR	ZQN	20	1000	330.0	12.4	3.3	4.3	1.6	8.0	12.0	Q1

TAPE AND REEL BOX DIMENSIONS

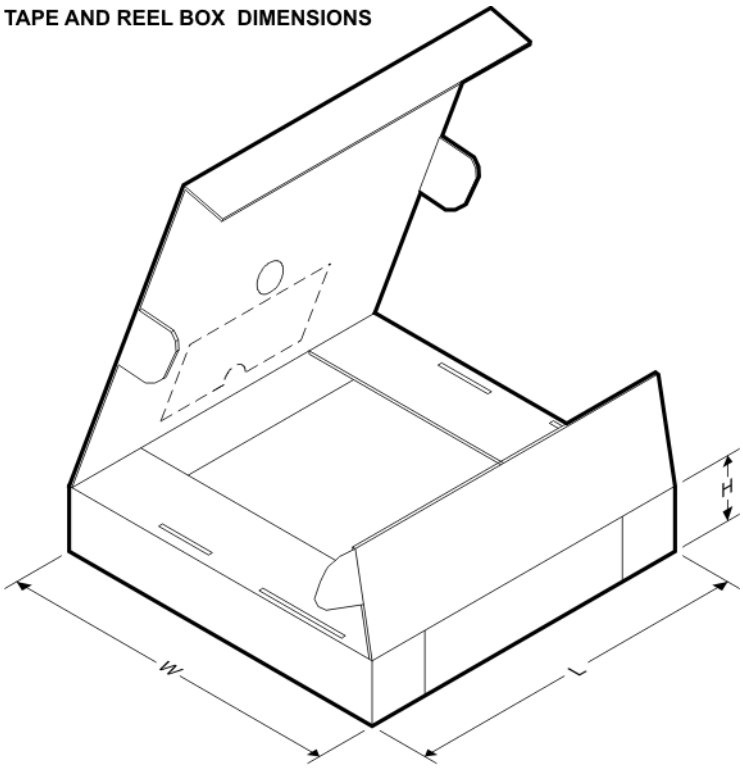

*All dimensions are nominal

Device	Package Type	Package Drawing	Pins	SPQ	Length (mm)	Width (mm)	Height (mm)
SN74LVC244ADBR	SSOP	DB	20	2000	367.0	367.0	38.0
SN74LVC244ADGVR	TVSOP	DGV	20	2000	367.0	367.0	35.0
SN74LVC244ADWR	SOIC	DW	20	2000	367.0	367.0	45.0
SN74LVC244ADWR	SOIC	DW	20	2000	364.0	361.0	36.0
SN74LVC244ADWRG4	SOIC	DW	20	2000	367.0	367.0	45.0
SN74LVC244ANSR	SO	NS	20	2000	367.0	367.0	45.0
SN74LVC244APWR	TSSOP	PW	20	2000	364.0	364.0	27.0
SN74LVC244APWRG3	TSSOP	PW	20	2000	364.0	364.0	27.0
SN74LVC244ARGYR	VQFN	RGY	20	3000	355.0	350.0	50.0
SN74LVC244ARWPR	X1QFN	RWP	20	2000	189.0	185.0	36.0
SN74LVC244AZQNR	BGA MICROSTAR JUNIOR	ZQN	20	1000	350.0	350.0	43.0

RGY (R–PVQFN–N20) PLASTIC QUAD FLATPACK NO–LEAD

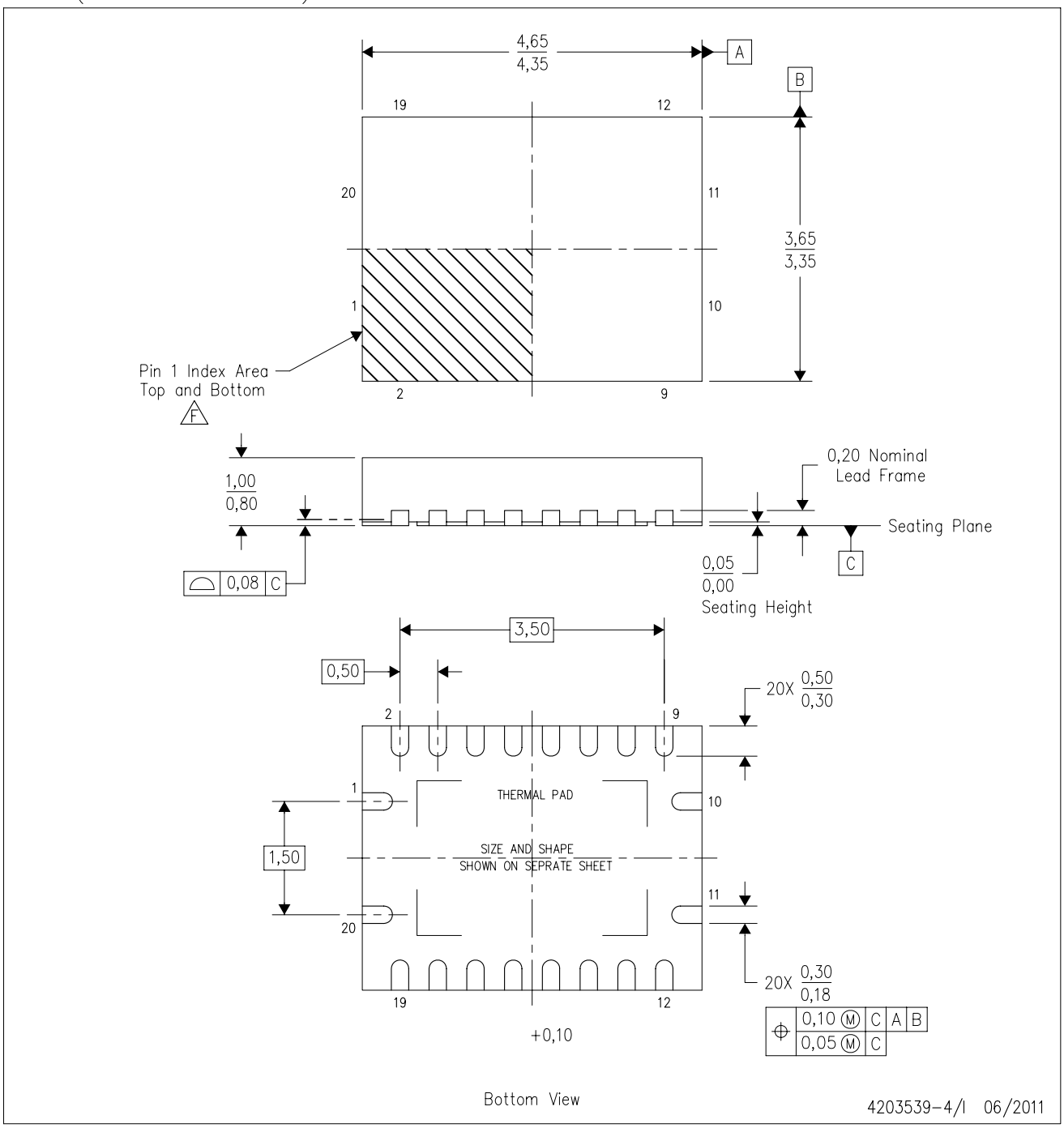

NOTES:
- A. All linear dimensions are in millimeters. Dimensioning and tolerancing per ASME Y14.5M–1994.
- B. This drawing is subject to change without notice.
- C. QFN (Quad Flatpack No–Lead) package configuration.
- D. The package thermal pad must be soldered to the board for thermal and mechanical performance.
- E. See the additional figure in the Product Data Sheet for details regarding the exposed thermal pad features and dimensions.
- F. Pin 1 identifiers are located on both top and bottom of the package and within the zone indicated. The Pin 1 identifiers are either a molded, marked, or metal feature.
- G. Package complies to JEDEC MO–241 variation BA.

RGY (R–PVQFN–N20) PLASTIC QUAD FLATPACK NO–LEAD

THERMAL INFORMATION

This package incorporates an exposed thermal pad that is designed to be attached directly to an external heatsink. The thermal pad must be soldered directly to the printed circuit board (PCB). After soldering, the PCB can be used as a heatsink. In addition, through the use of thermal vias, the thermal pad can be attached directly to the appropriate copper plane shown in the electrical schematic for the device, or alternatively, can be attached to a special heatsink structure designed into the PCB. This design optimizes the heat transfer from the integrated circuit (IC).

For information on the Quad Flatpack No–Lead (QFN) package and its advantages, refer to Application Report, QFN/SON PCB Attachment, Texas Instruments Literature No. SLUA271. This document is available at www.ti.com.

The exposed thermal pad dimensions for this package are shown in the following illustration.

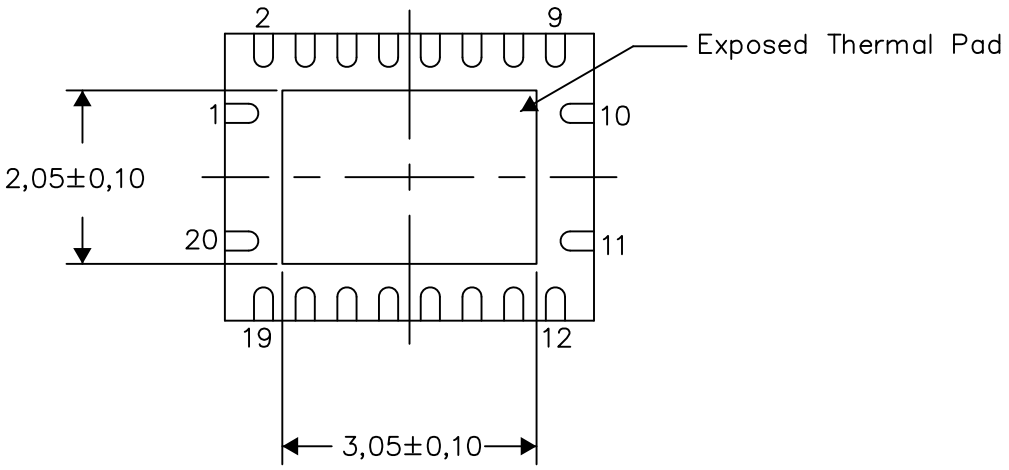

Bottom View

Exposed Thermal Pad Dimensions

4206353–4/P 03/14

NOTE: All linear dimensions are in millimeters

RGY (R–PVQFN–N20) PLASTIC QUAD FLATPACK NO–LEAD

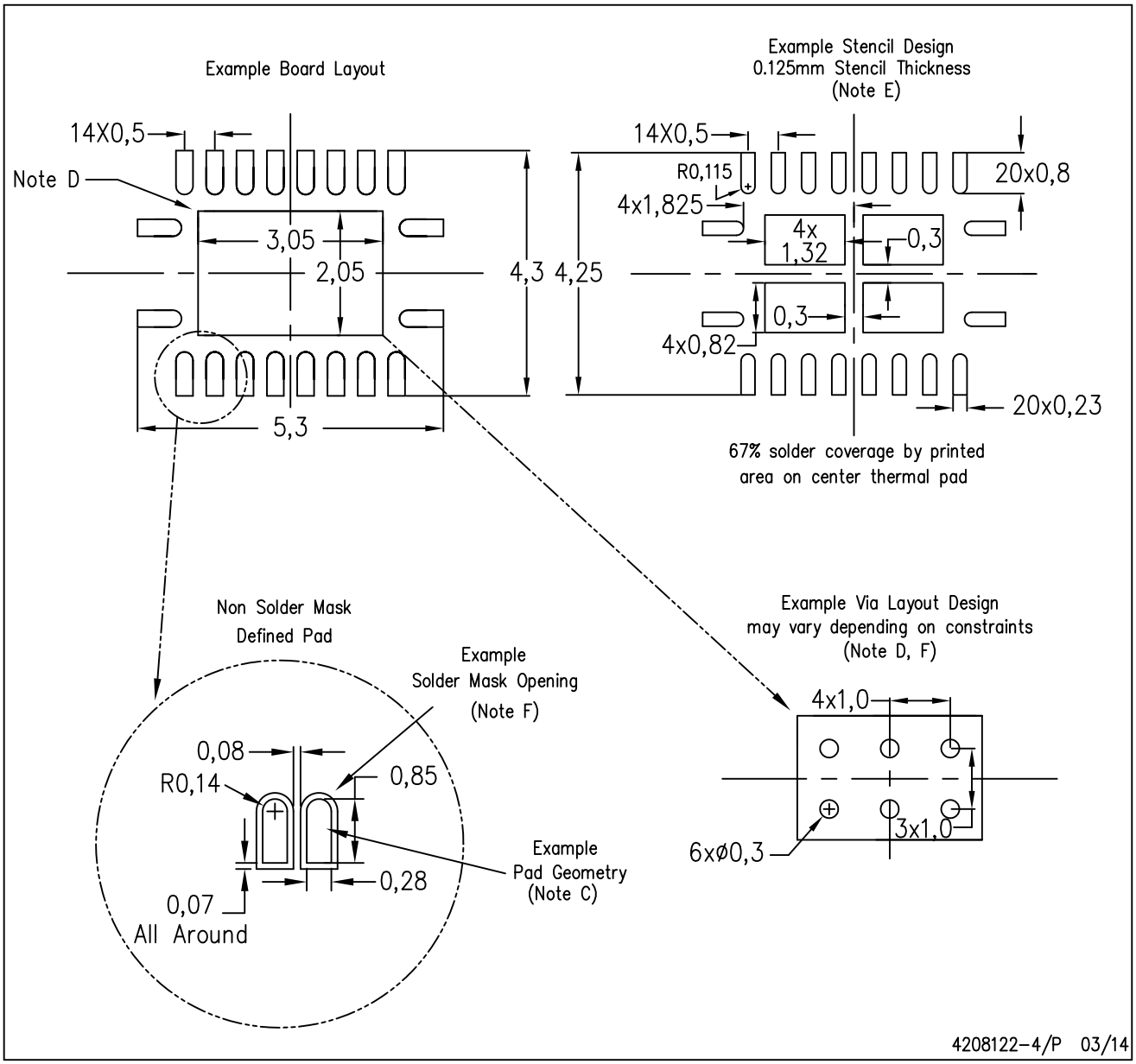

NOTES:
A. All linear dimensions are in millimeters.
B. This drawing is subject to change without notice.
C. Publication IPC–7351 is recommended for alternate designs.
D. This package is designed to be soldered to a thermal pad on the board. Refer to Application Note, Quad Flat–Pack QFN/SON PCB Attachment, Texas Instruments Literature No. SLUA271, and also the Product Data Sheets for specific thermal information, via requirements, and recommended board layout. These documents are available at www.ti.com <http://www.ti.com>.
E. Laser cutting apertures with trapezoidal walls and also rounding corners will offer better paste release. Customers should contact their board assembly site for stencil design recommendations. Refer to IPC 7525 for stencil design considerations.
F. Customers should contact their board fabrication site for minimum solder mask web tolerances between signal pads.

MECHANICAL DATA

NS (R-PDSO-G)** **PLASTIC SMALL-OUTLINE PACKAGE**

14-PINS SHOWN

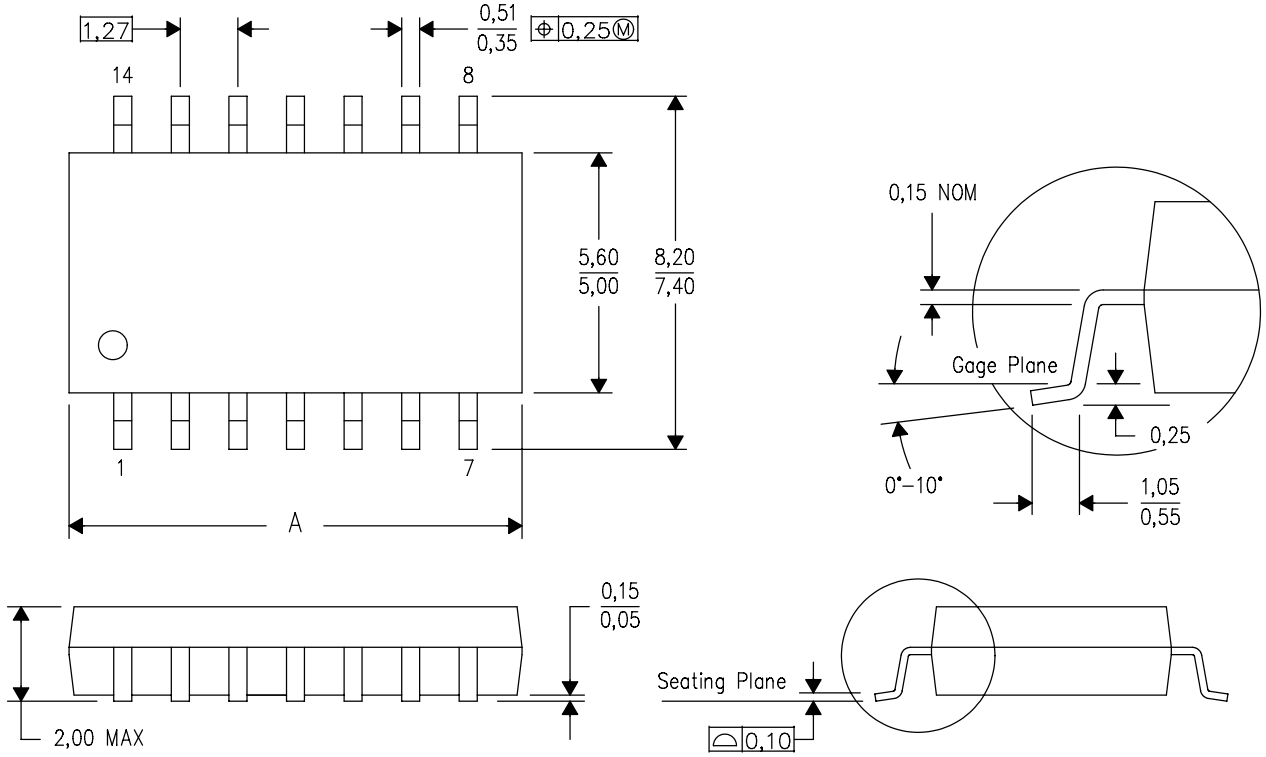

DIM \ PINS **	14	16	20	24
A MAX	10,50	10,50	12,90	15,30
A MIN	9,90	9,90	12,30	14,70

4040062/C 03/03

NOTES:
A. All linear dimensions are in millimeters.
B. This drawing is subject to change without notice.
C. Body dimensions do not include mold flash or protrusion, not to exceed 0,15.

PW (R-PDSO-G20) PLASTIC SMALL OUTLINE

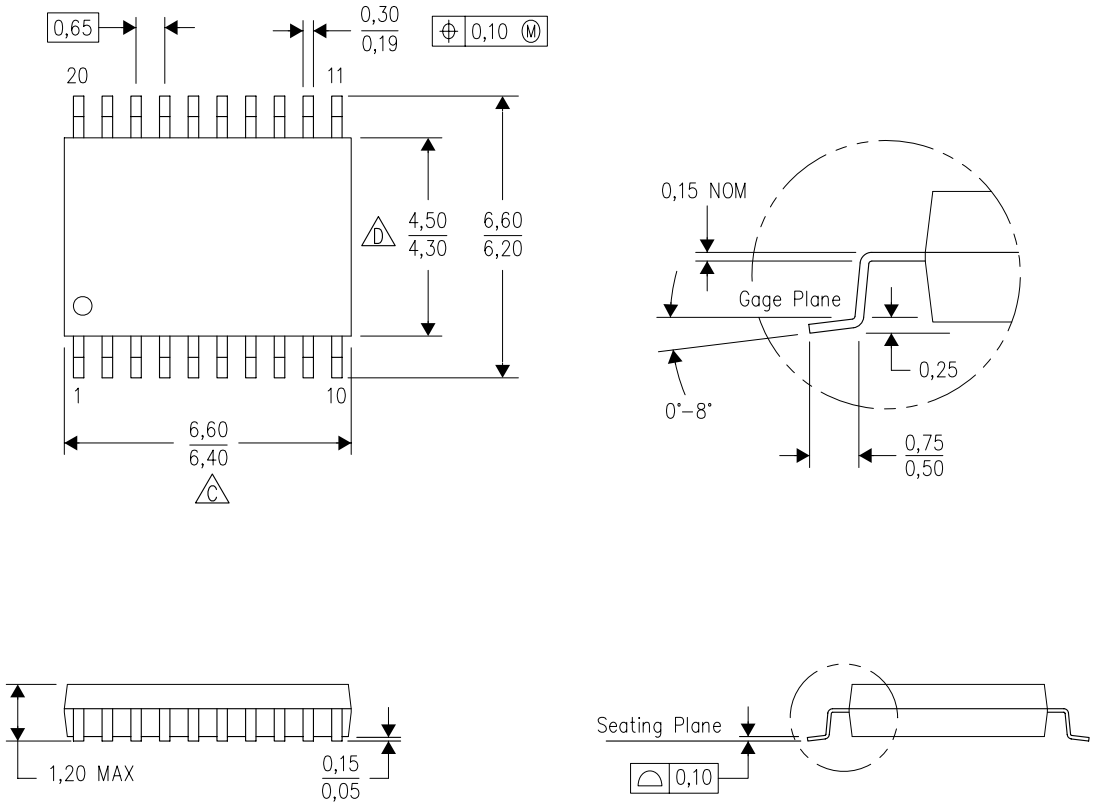

4040064-5/G 02/11

NOTES:
A. All linear dimensions are in millimeters. Dimensioning and tolerancing per ASME Y14.5M-1994.
B. This drawing is subject to change without notice.
C. Body length does not include mold flash, protrusions, or gate burrs. Mold flash, protrusions, or gate burrs shall not exceed 0,15 each side.
D. Body width does not include interlead flash. Interlead flash shall not exceed 0,25 each side.
E. Falls within JEDEC MO-153

PW (R–PDSO–G20) PLASTIC SMALL OUTLINE

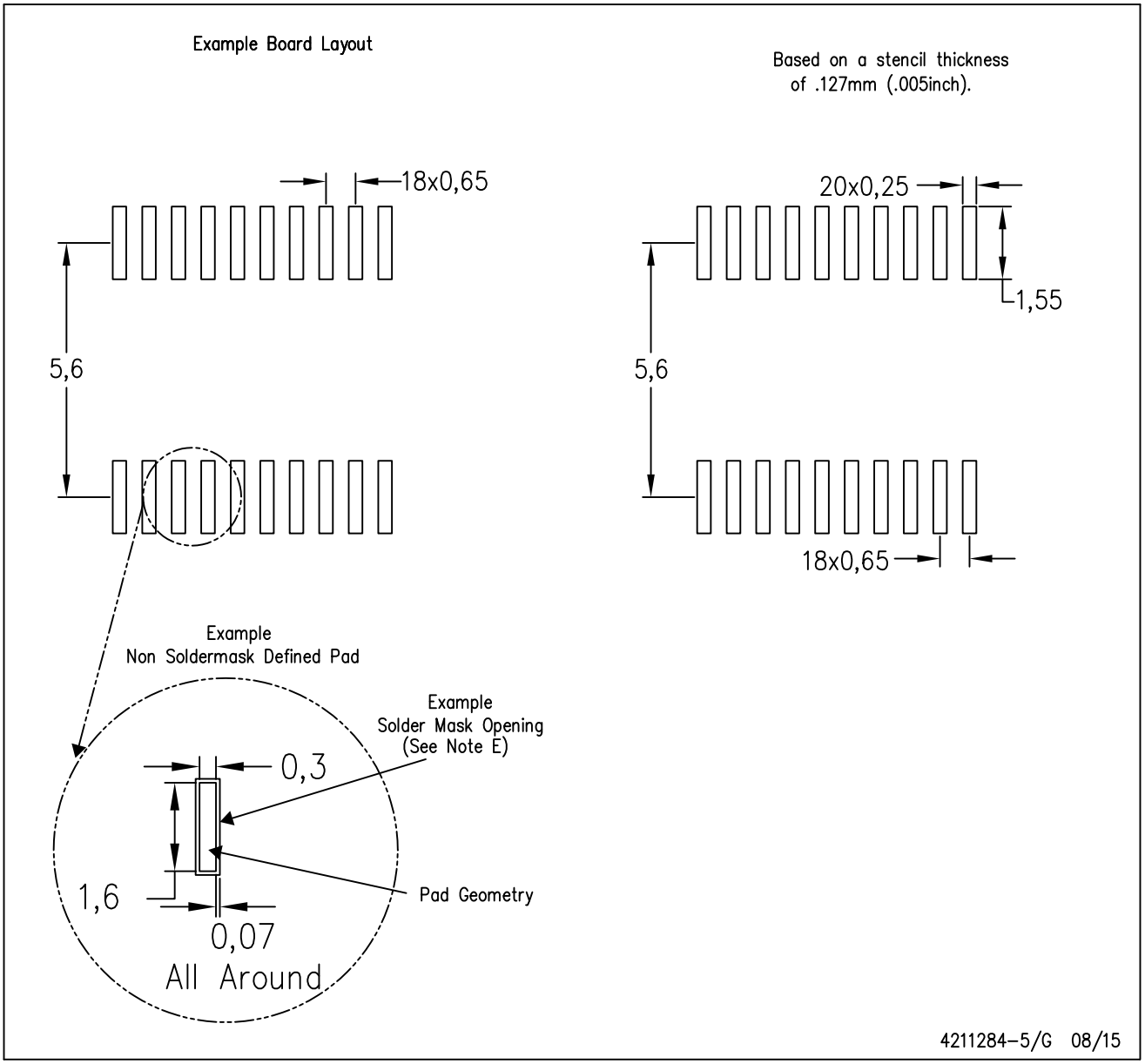

NOTES:
A. All linear dimensions are in millimeters.
B. This drawing is subject to change without notice.
C. Publication IPC–7351 is recommended for alternate design.
D. Laser cutting apertures with trapezoidal walls and also rounding corners will offer better paste release. Customers should contact their board assembly site for stencil design recommendations. Refer to IPC–7525 for other stencil recommendations.
E. Customers should contact their board fabrication site for solder mask tolerances between and around signal pads.

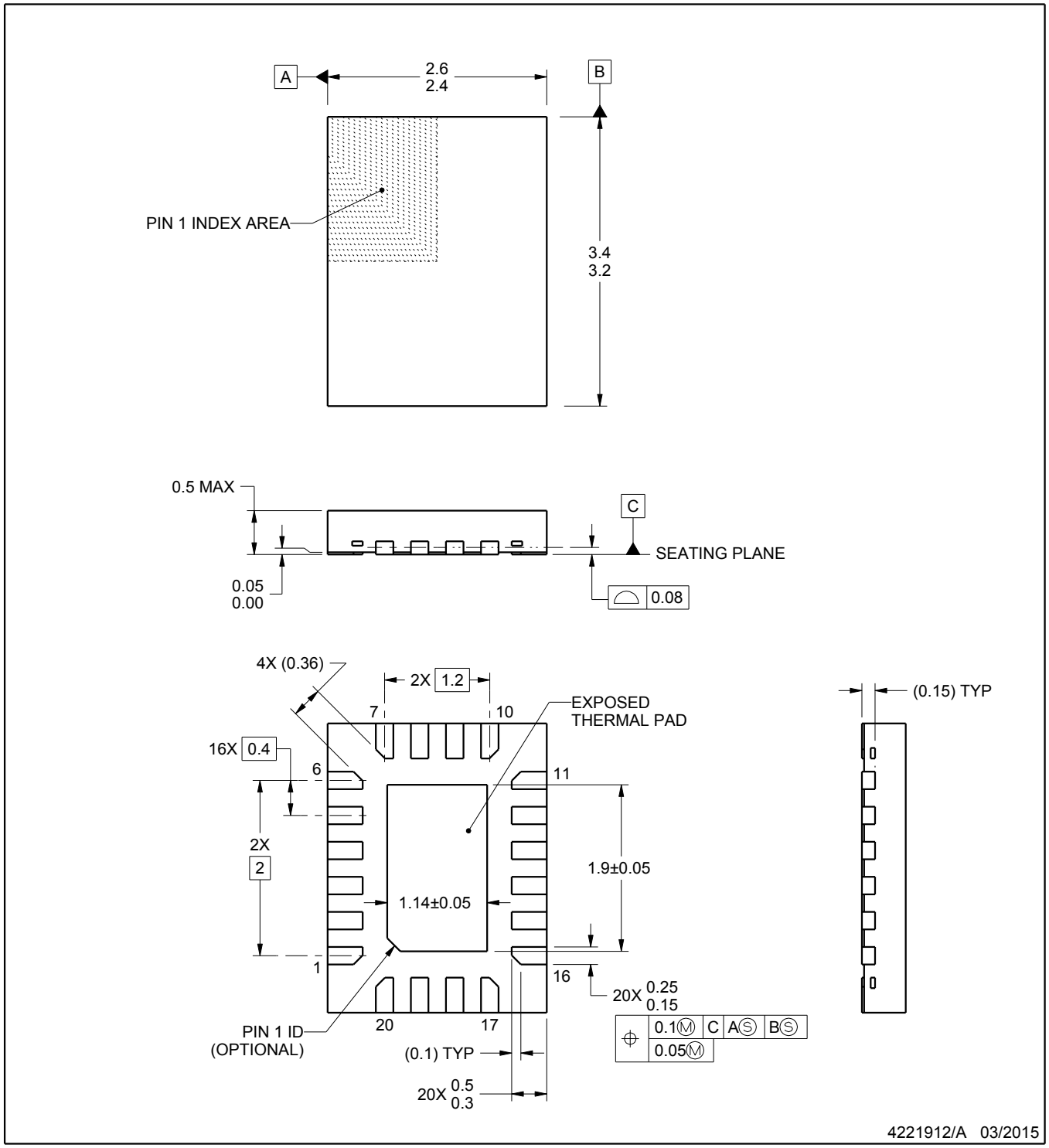

NOTES:

1. All linear dimensions are in millimeters. Any dimensions in parenthesis are for reference only. Dimensioning and tolerancing per ASME Y14.5M.
2. This drawing is subject to change without notice.
3. The package thermal pad must be soldered to the printed circuit board for thermal and mechanical performance.

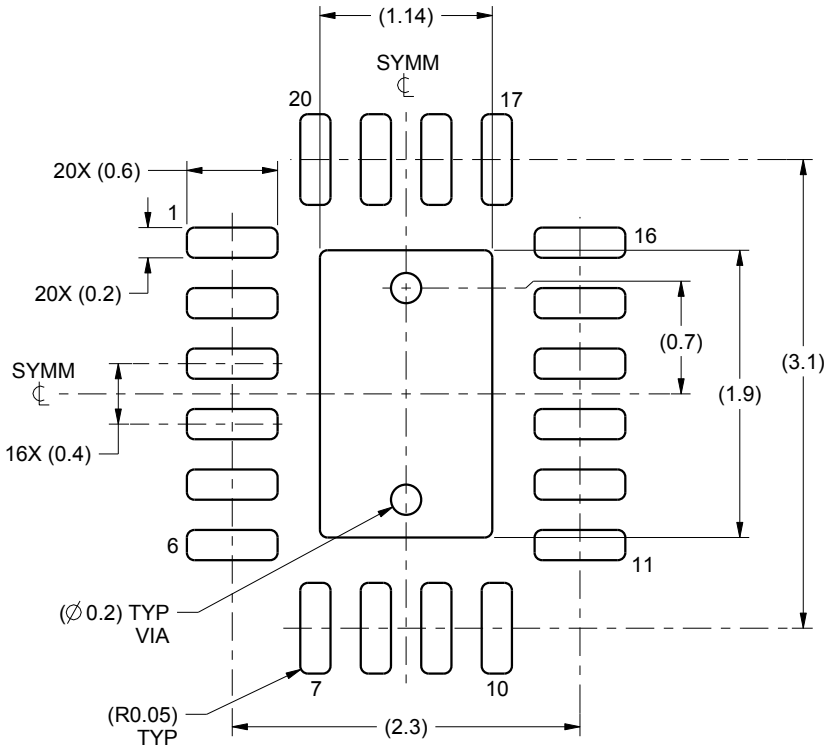

LAND PATTERN EXAMPLE
SCALE:20X

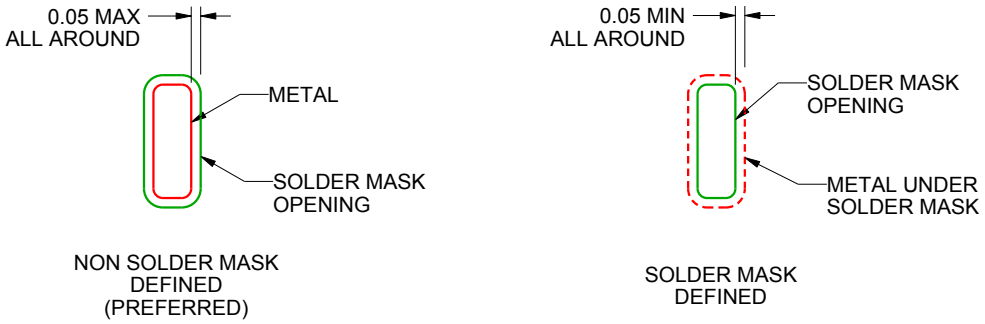

SOLDER MASK DETAILS

4221912/A 03/2015

NOTES: (continued)

4. This package is designed to be soldered to a thermal pad on the board. For more information, see Texas Instruments literature number SLUA271 (www.ti.com/lit/slua271).

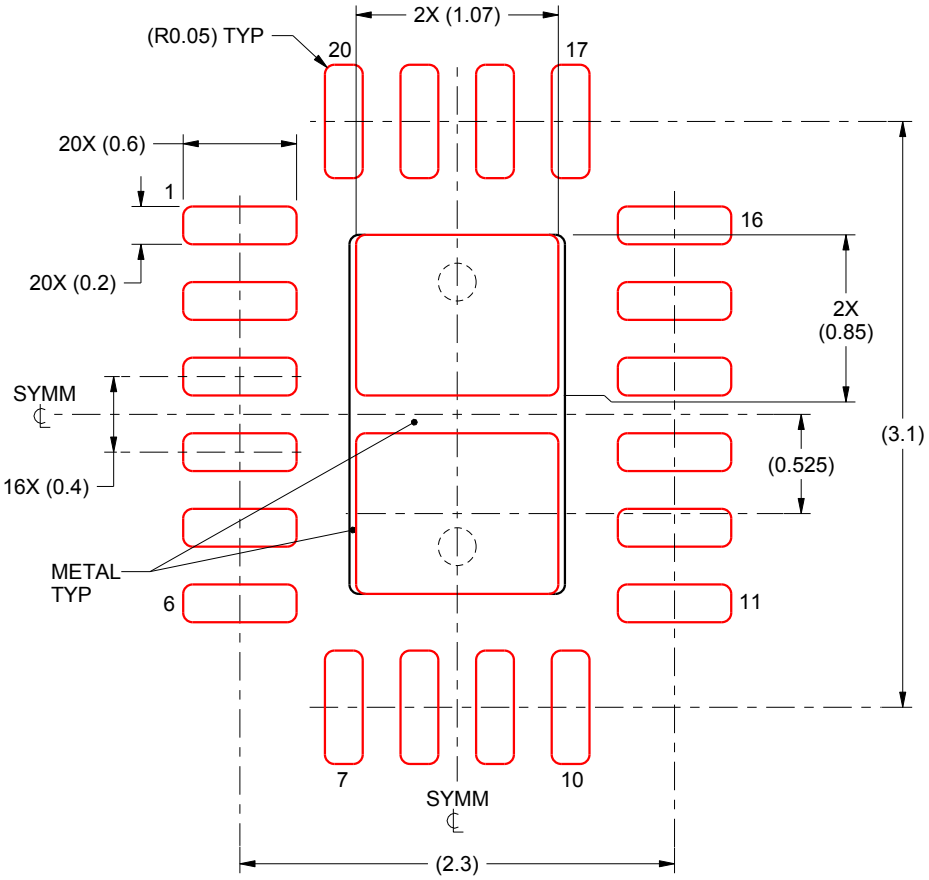

SOLDER PASTE EXAMPLE
BASED ON 0.1 mm THICK STENCIL

EXPOSED PAD
84% PRINTED SOLDER COVERAGE BY AREA
SCALE:25X

4221912/A 03/2015

NOTES: (continued)

5. Laser cutting apertures with trapezoidal walls and rounded corners may offer better paste release. IPC-7525 may have alternate design recommendations.

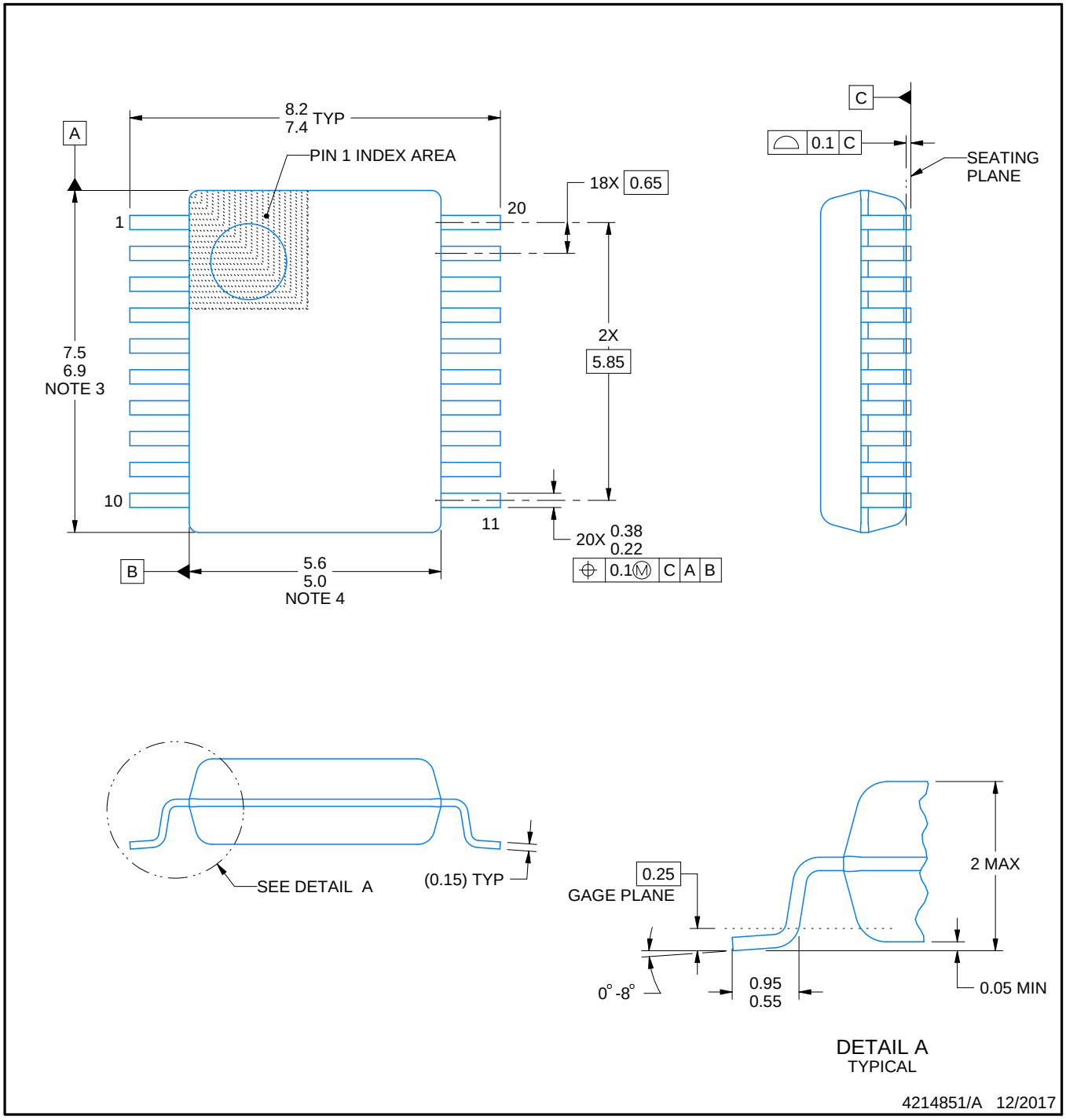

NOTES:

1. All linear dimensions are in millimeters. Any dimensions in parenthesis are for reference only. Dimensioning and tolerancing per ASME Y14.5M.
2. This drawing is subject to change without notice.
3. This dimension does not include mold flash, protrusions, or gate burrs. Mold flash, protrusions, or gate burrs shall not exceed 0.15 mm per side.
4. This dimension does not include interlead flash. Interlead flash shall not exceed 0.25 mm per side.
5. Reference JEDEC registration MO-150.

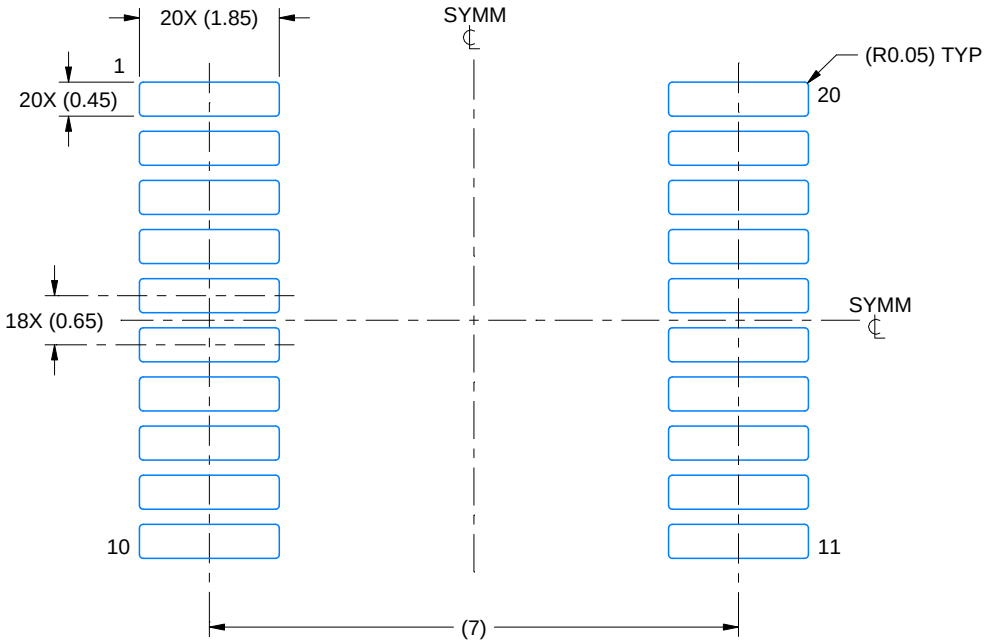

LAND PATTERN EXAMPLE
EXPOSED METAL SHOWN
SCALE: 10X

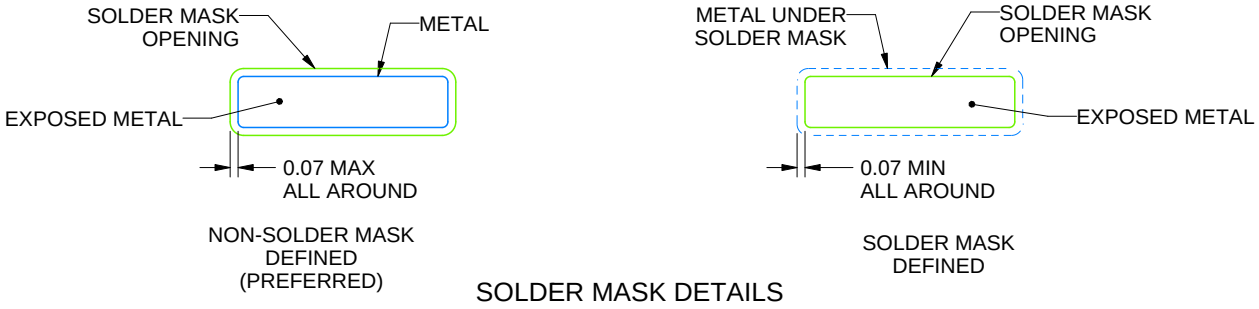

SOLDER MASK DETAILS

4214851/A 12/2017

NOTES: (continued)

6. Publication IPC-7351 may have alternate designs.
7. Solder mask tolerances between and around signal pads can vary based on board fabrication site.

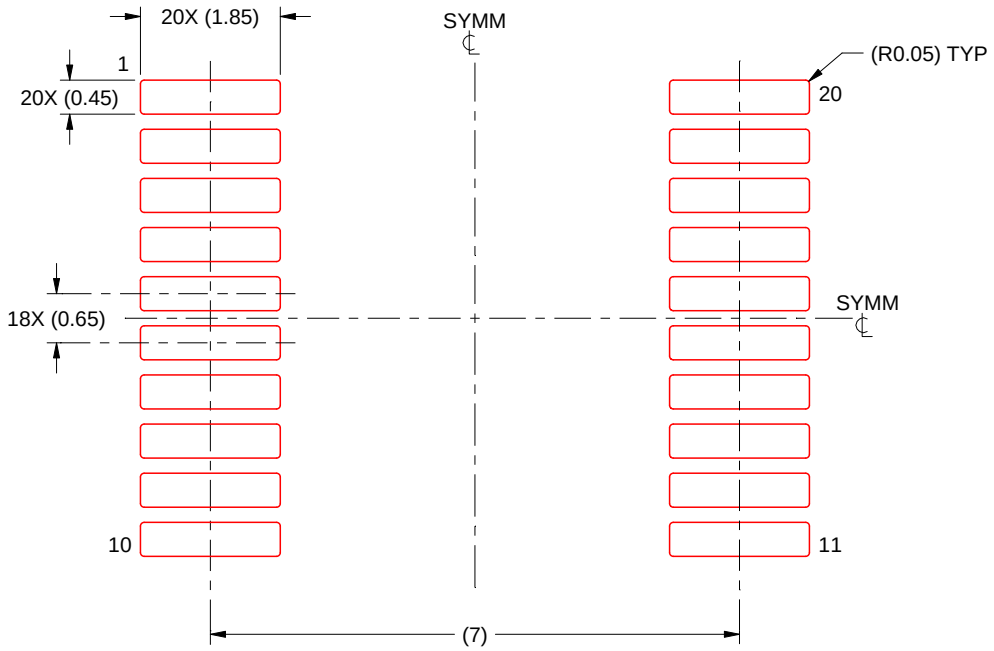

SOLDER PASTE EXAMPLE
BASED ON 0.125 mm THICK STENCIL
SCALE: 10X

4214851/A 12/2017

NOTES: (continued)

8. Laser cutting apertures with trapezoidal walls and rounded corners may offer better paste release. IPC-7525 may have alternate design recommendations.
9. Board assembly site may have different recommendations for stencil design.

N (R–PDIP–T**) PLASTIC DUAL–IN–LINE PACKAGE

16 PINS SHOWN

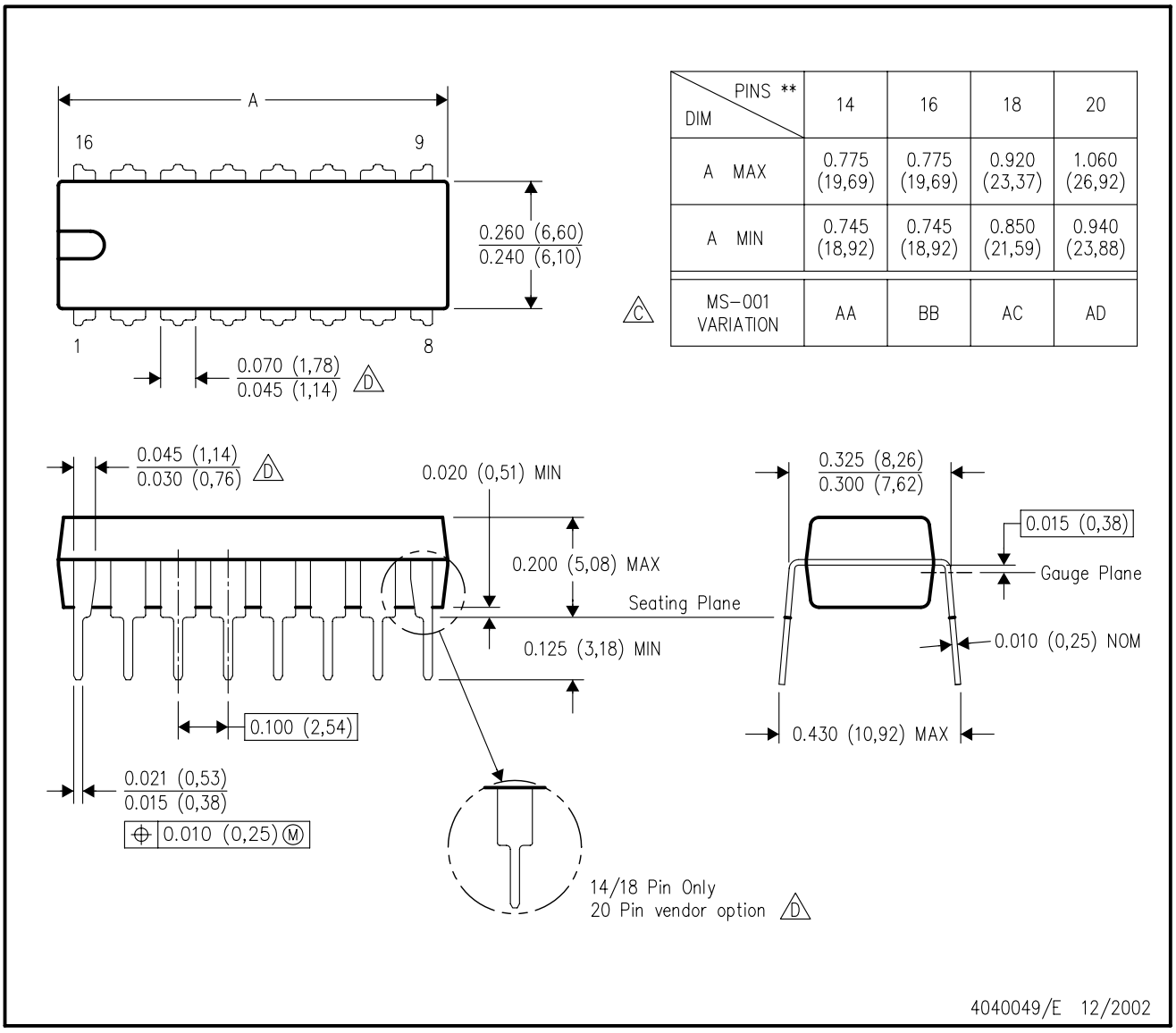

DIM \ PINS **	14	16	18	20
A MAX	0.775 (19,69)	0.775 (19,69)	0.920 (23,37)	1.060 (26,92)
A MIN	0.745 (18,92)	0.745 (18,92)	0.850 (21,59)	0.940 (23,88)
MS–001 VARIATION (C)	AA	BB	AC	AD

NOTES:
A. All linear dimensions are in inches (millimeters).
B. This drawing is subject to change without notice.
C. Falls within JEDEC MS–001, except 18 and 20 pin minimum body length (Dim A).
D. The 20 pin end lead shoulder width is a vendor option, either half or full width.

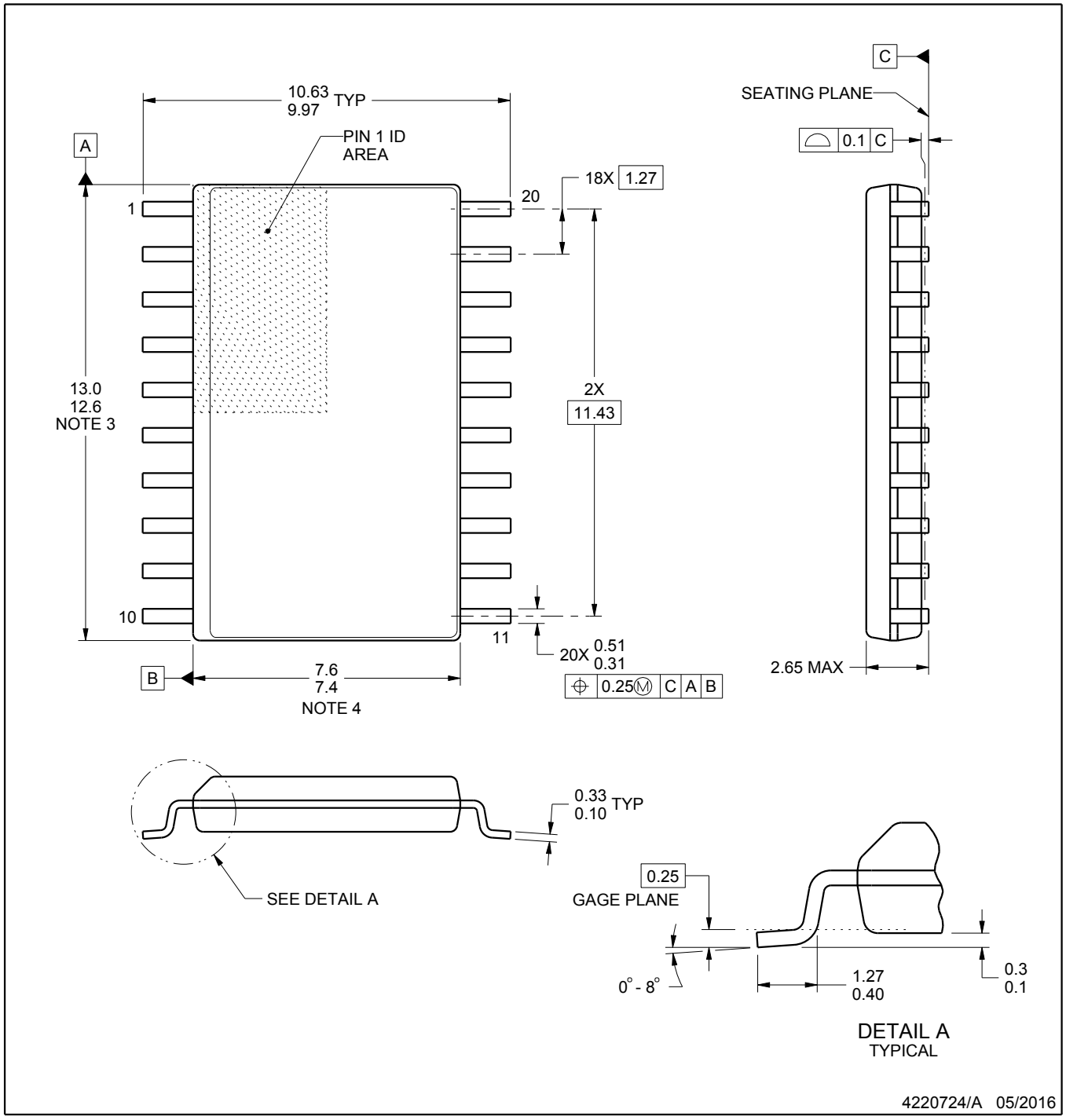

NOTES:

1. All linear dimensions are in millimeters. Dimensions in parenthesis are for reference only. Dimensioning and tolerancing per ASME Y14.5M.
2. This drawing is subject to change without notice.
3. This dimension does not include mold flash, protrusions, or gate burrs. Mold flash, protrusions, or gate burrs shall not exceed 0.15 mm per side.
4. This dimension does not include interlead flash. Interlead flash shall not exceed 0.43 mm per side.
5. Reference JEDEC registration MS-013.

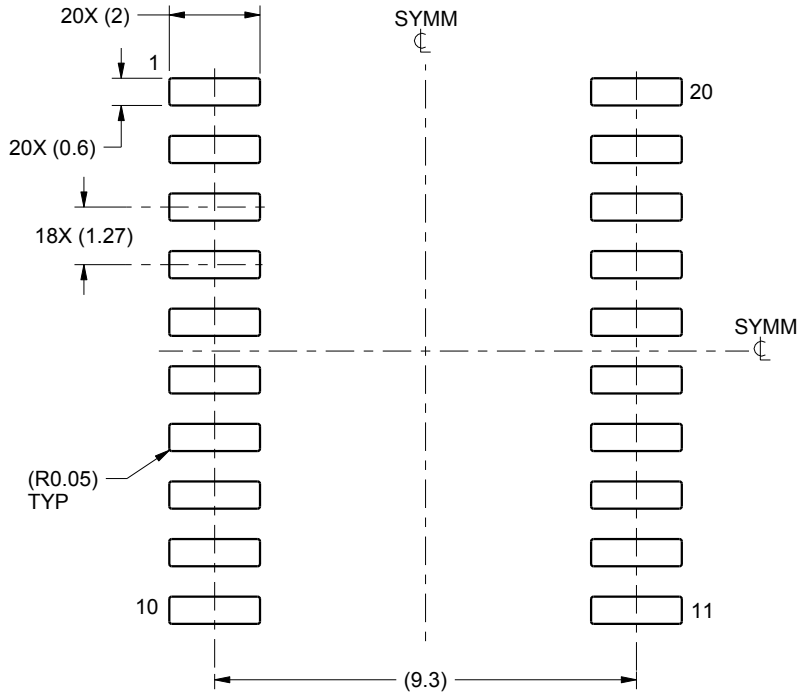

LAND PATTERN EXAMPLE
SCALE:6X

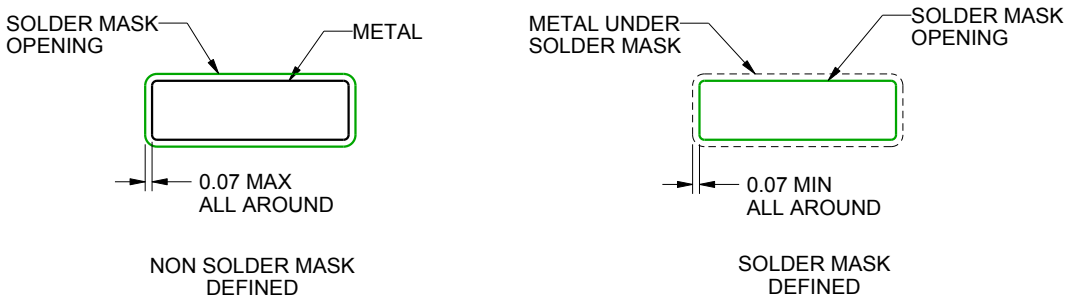

SOLDER MASK DETAILS

4220724/A 05/2016

NOTES: (continued)

6. Publication IPC-7351 may have alternate designs.
7. Solder mask tolerances between and around signal pads can vary based on board fabrication site.

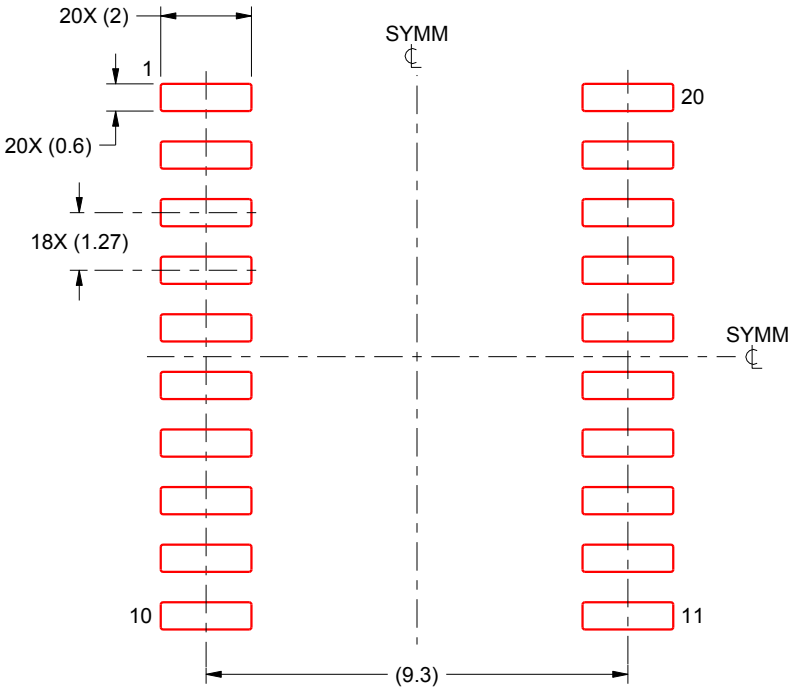

SOLDER PASTE EXAMPLE
BASED ON 0.125 mm THICK STENCIL
SCALE:6X

4220724/A 05/2016

NOTES: (continued)

8. Laser cutting apertures with trapezoidal walls and rounded corners may offer better paste release. IPC-7525 may have alternate design recommendations.
9. Board assembly site may have different recommendations for stencil design.

ZQN (R–PBGA–N20) PLASTIC BALL GRID ARRAY

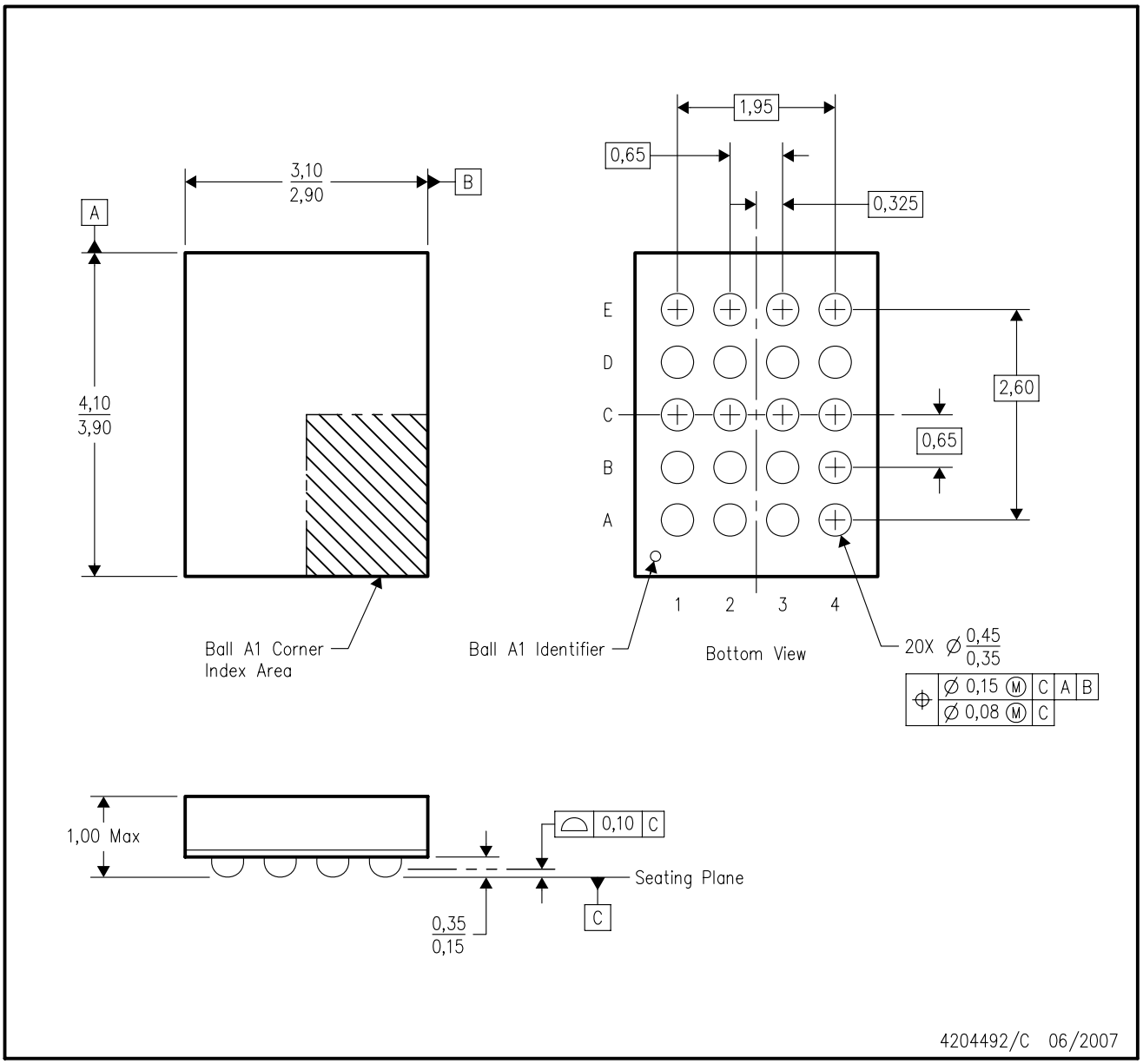

NOTES:
A. All linear dimensions are in millimeters. Dimensioning and tolerancing per ASME Y14.5M–1994.
B. This drawing is subject to change without notice.
C. Falls within JEDEC MO–285 variation BC–2.
D. This package is lead–free. Refer to the 20 GQN package (drawing 4200704) for tin–lead (SnPb).

IMPORTANT NOTICE AND DISCLAIMER

TI PROVIDES TECHNICAL AND RELIABILITY DATA (INCLUDING DATASHEETS), DESIGN RESOURCES (INCLUDING REFERENCE DESIGNS), APPLICATION OR OTHER DESIGN ADVICE, WEB TOOLS, SAFETY INFORMATION, AND OTHER RESOURCES “AS IS” AND WITH ALL FAULTS, AND DISCLAIMS ALL WARRANTIES, EXPRESS AND IMPLIED, INCLUDING WITHOUT LIMITATION ANY IMPLIED WARRANTIES OF MERCHANTABILITY, FITNESS FOR A PARTICULAR PURPOSE OR NON-INFRINGEMENT OF THIRD PARTY INTELLECTUAL PROPERTY RIGHTS.

These resources are intended for skilled developers designing with TI products. You are solely responsible for (1) selecting the appropriate TI products for your application, (2) designing, validating and testing your application, and (3) ensuring your application meets applicable standards, and any other safety, security, or other requirements. These resources are subject to change without notice. TI grants you permission to use these resources only for development of an application that uses the TI products described in the resource. Other reproduction and display of these resources is prohibited. No license is granted to any other TI intellectual property right or to any third party intellectual property right. TI disclaims responsibility for, and you will fully indemnify TI and its representatives against, any claims, damages, costs, losses, and liabilities arising out of your use of these resources.

TI’s products are provided subject to TI’s Terms of Sale (www.ti.com/legal/termsofsale.html) or other applicable terms available either on ti.com or provided in conjunction with such TI products. TI’s provision of these resources does not expand or otherwise alter TI’s applicable warranties or warranty disclaimers for TI products.

Mailing Address: Texas Instruments, Post Office Box 655303, Dallas, Texas 75265
Copyright © 2019, Texas Instruments Incorporated

Looking for pricing, stock, or lifecycle information?

Click below to explore more details on WIN SOURCE:

- View SN74LVC244ARGYR on WIN SOURCE
- Texas Instruments Information

Optimize Your Supply Chain with WIN SOURCE Solutions

- Global Sourcing Solution
- Obsolete Management
- Cost Control Management
- Shortage Management
- Alternative Solution
- Excess Inventory Management