THE DATASHEET OF

PZU15B2A,115

www.win-source.net 0086-755-83957316

Important notice

Dear Customer,

On 7 February 2017 the former NXP Standard Product business became a new company with the tradename **Nexperia**. Nexperia is an industry leading supplier of Discrete, Logic and PowerMOS semiconductors with its focus on the automotive, industrial, computing, consumer and wearable application markets

In data sheets and application notes which still contain NXP or Philips Semiconductors references, use the references to Nexperia, as shown below.

Instead of http://www.nxp.com, http://www.philips.com/ or http://www.semiconductors.philips.com/, use **http://www.nexperia.com**

Instead of sales.addresses@www.nxp.com or sales.addresses@www.semiconductors.philips.com, use **salesaddresses@nexperia.com** (email)

Replace the copyright notice at the bottom of each page or elsewhere in the document, depending on the version, as shown below:
- © NXP N.V. (year). All rights reserved or © Koninklijke Philips Electronics N.V. (year). All rights reserved
Should be replaced with:
- **© Nexperia B.V. (year). All rights reserved**.

If you have any questions related to the data sheet, please contact our nearest sales office via e-mail or telephone (details via **salesaddresses@nexperia.com**). Thank you for your cooperation and understanding,

Kind regards,

Team Nexperia

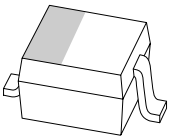

PZUxBA series

Single Zener diodes

Rev. 01 — 19 September 2008 **Product data sheet**

1. Product profile

1.1 General description

General-purpose Zener diodes in a SOD323 (SC-76) very small Surface-Mounted Device (SMD) plastic package.

1.2 Features

- Non-repetitive peak reverse power dissipation: $P_{ZSM} \leq 40$ W
- Total power dissipation: $P_{tot} \leq 320$ mW
- Tolerance series:
  B: approximately ±5 %;
  B1, B2, B3: approximately ±2 %
- Wide working voltage range:
  nominal 2.4 V to 36 V (E24 range)
- Low reverse current I_R range
- Small plastic package suitable for surface-mounted design
- AEC-Q101 qualified

1.3 Applications

- General regulation functions

1.4 Quick reference data

Table 1. Quick reference data

Symbol	Parameter	Conditions		Min	Typ	Max	Unit
V_F	forward voltage	I_F = 100 mA	[1]	-	-	1.1	V
P_{ZSM}	non-repetitive peak reverse power dissipation		[2]	-	-	40	W
P_{tot}	total power dissipation	$T_{amb} \leq 25$ °C	[3]	-	-	320	mW

[1] Pulse test: $t_p \leq 300$ µs; $\delta \leq 0.02$.

[2] t_p = 100 µs; square wave; T_j = 25 °C prior to surge

[3] Device mounted on an FR4 Printed-Circuit Board (PCB), single-sided copper, tin-plated and standard footprint.

founded by Philips

2. Pinning information

Table 2. Pinning

Pin	Description	Simplified outline	Graphic symbol
1	cathode [1]	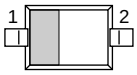	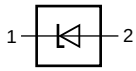 006aaa152
2	anode		

[1] The marking bar indicates the cathode.

3. Ordering information

Table 3. Ordering information

Type number	Package		
	Name	Description	Version
PZU2.4BA to PZU36BA[1]	SC-76	plastic surface-mounted package; 2 leads	SOD323
PZU2.4BA/DG to PZU36BA/DG[1][2]			

[1] The series consists of 97 types with nominal working voltages from 2.4 V to 36 V.

[2] /DG: halogen-free

© NXP B.V. 2008. All rights reserved.

4. Marking

Table 4. Marking codes

Type number[1]	Marking code				Type number[1]	Marking code			
	B	B1	B2	B3		B	B1	B2	B3
PZU2.4*A	X8	-	-	-	PZU2.4*A/DG	Y8	-	-	-
PZU2.7*A	X9	XA	XB	-	PZU2.7*A/DG	Y9	YA	YB	-
PZU3.0*A	XT	XU	XV	-	PZU3.0*A/DG	YT	YU	YV	-
PZU3.3*A	XW	XX	XY	-	PZU3.3*A/DG	YW	YX	YY	-
PZU3.6*A	XZ	MC	MD	-	PZU3.6*A/DG	YZ	NC	ND	-
PZU3.9*A	ME	MF	MG	-	PZU3.9*A/DG	NE	NF	NG	-
PZU4.3*A	MM	MN	MP	MR	PZU4.3*A/DG	NM	NN	NP	NR
PZU4.7*A	MS	MT	MU	MV	PZU4.7*A/DG	NS	NT	NU	NV
PZU5.1*A	MW	MX	MY	MZ	PZU5.1*A/DG	NW	NX	NY	NZ
PZU5.6*A	LF	LG	LH	LK	PZU5.6*A/DG	RF	RG	RH	RK
PZU6.2*A	LL	LM	LN	LP	PZU6.2*A/DG	RL	RM	RN	RP
PZU6.8*A	LR	LS	LT	LU	PZU6.8*A/DG	RR	RS	RT	RU
PZU7.5*A	LV	LW	LX	LY	PZU7.5*A/DG	RV	RW	RX	RY
PZU8.2*A	LZ	CR	CS	CT	PZU8.2*A/DG	RZ	ER	ES	ET
PZU9.1*A	CU	CV	CW	CX	PZU9.1*A/DG	EU	EV	EW	EX
PZU10*A	VA	VB	VC	VD	PZU10*A/DG	WA	WB	WC	WD
PZU11*A	VE	VF	VG	VH	PZU11*A/DG	WE	WF	WG	WH
PZU12*A	VK	VL	VM	VN	PZU12*A/DG	WK	WL	WM	WN
PZU13*A	VP	VR	VS	VT	PZU13*A/DG	WP	WR	WS	WT
PZU14*A	-	-	VU	-	PZU14*A/DG	-	-	WU	-
PZU15*A	VV	VW	VX	VY	PZU15*A/DG	WV	WW	WX	WY
PZU16*A	VZ	X1	X2	X3	PZU16*A/DG	WZ	Y1	Y2	Y3
PZU18*A	X4	X5	X6	X7	PZU18*A/DG	Y4	Y5	Y6	Y7
PZU20*A	XC	XD	XE	XF	PZU20*A/DG	YC	YD	YE	YF
PZU22*A	XG	XH	XK	XL	PZU22*A/DG	YG	YH	YK	YL
PZU24*A	XM	XN	XP	XR	PZU24*A/DG	YM	YN	YP	YR
PZU27*A	XS	-	-	-	PZU27*A/DG	YS	-	-	-
PZU30*A	MH	-	-	-	PZU30*A/DG	NH	-	-	-
PZU33*A	MK	-	-	-	PZU33*A/DG	NK	-	-	-
PZU36*A	ML	-	-	-	PZU36*A/DG	NL	-	-	-

[1] * = B: tolerance series B, approximately ±5 %
* = B1, B2, B3: tolerance series B1, B2, B3: approximately ±2 %

© NXP B.V. 2008. All rights reserved.

5. Limiting values

Table 5. Limiting values

In accordance with the Absolute Maximum Rating System (IEC 60134).

Symbol	Parameter	Conditions		Min	Max	Unit
I_F	forward current			-	200	mA
I_{ZSM}	non-repetitive peak reverse current		[1]	-	see Table 8 and 9	
P_{ZSM}	non-repetitive peak reverse power dissipation		[1]	-	40	W
P_{tot}	total power dissipation	$T_{amb} \leq 25$ °C	[2]	-	320	mW
			[3]	-	490	mW
T_j	junction temperature			-	150	°C
T_{amb}	ambient temperature			–55	+150	°C
T_{stg}	storage temperature			–65	+150	°C

[1] t_p = 100 µs; square wave; T_j = 25 °C prior to surge

[2] Device mounted on an FR4 PCB, single-sided copper, tin-plated and standard footprint.

[3] Device mounted on an FR4 PCB, single-sided copper, tin-plated, mounting pad for cathode 1 cm^2.

6. Thermal characteristics

Table 6. Thermal characteristics

Symbol	Parameter	Conditions		Min	Typ	Max	Unit
$R_{th(j-a)}$	thermal resistance from junction to ambient	in free air	[1]	-	-	390	K/W
			[2]	-	-	255	K/W
$R_{th(j-sp)}$	thermal resistance from junction to solder point		[3]	-	-	55	K/W

[1] Device mounted on an FR4 PCB, single-sided copper, tin-plated and standard footprint.

[2] Device mounted on an FR4 PCB, single-sided copper, tin-plated, mounting pad for cathode 1 cm^2.

[3] Soldering point of cathode tab.

7. Characteristics

Table 7. Characteristics

T_j = 25 °C unless otherwise specified.

Symbol	Parameter	Conditions		Min	Typ	Max	Unit
V_F	forward voltage		[1]				
		I_F = 10 mA		-	-	0.9	V
		I_F = 100 mA		-	-	1.1	V

[1] Pulse test: $t_p \leq 300$ µs; $\delta \leq 0.02$.

© NXP B.V. 2008. All rights reserved.

Table 8. Characteristics per type; PZU2.4BA to PZU5.6B3A and PZU2.4BA/DG to PZU5.6B3A/DG

T_j = 25 °C unless otherwise specified.

PZUxBA	Sel	Working voltage V_Z (V)		Differential resistance r_{dif} (Ω)		Reverse current I_R (μA)		Temperature coefficient S_Z (mV/K)	Diode capacitance C_d (pF)[1]	Non-repetitive peak reverse current I_{ZSM} (A)[2]
		I_Z = 5 mA		I_Z = 0.5 mA	I_Z = 5 mA			I_Z = 5 mA		
		Min	Max	Max	Max	Max	V_R (V)	Typ	Max	Max
2.4	B	2.3	2.6	1000	100	50	1	–1.6	450	8
2.7	B	2.5	2.9	1000	100	20	1	–2.0	440	8
	B1	2.5	2.75							
	B2	2.65	2.9							
3.0	B	2.8	3.2	1000	95	10	1	–2.1	425	8
	B1	2.8	3.05							
	B2	2.95	3.2							
3.3	B	3.1	3.5	1000	95	5	1	–2.4	410	8
	B1	3.1	3.35							
	B2	3.25	3.5							
3.6	B	3.4	3.8	1000	90	5	1	–2.4	390	8
	B1	3.4	3.65							
	B2	3.55	3.8							
3.9	B	3.7	4.1	1000	90	3	1	–2.5	370	8
	B1	3.7	3.97							
	B2	3.87	4.10							
4.3	B	4.01	4.48	1000	90	3	1	–2.5	350	8
	B1	4.01	4.21							
	B2	4.15	4.34							
	B3	4.28	4.48							
4.7	B	4.42	4.9	800	80	2	1	–1.4	325	8
	B1	4.42	4.61							
	B2	4.55	4.75							
	B3	4.69	4.9							
5.1	B	4.84	5.37	250	60	2	1.5	0.3	300	5.5
	B1	4.84	5.04							
	B2	4.98	5.2							
	B3	5.14	5.37							
5.6	B	5.31	5.92	100	40	1	2.5	1.9	275	5.5
	B1	5.31	5.55							
	B2	5.49	5.73							
	B3	5.67	5.92							

[1] f = 1 MHz; V_R = 0 V

[2] t_p = 100 μs; square wave; T_j = 25 °C prior to surge

© NXP B.V. 2008. All rights reserved.

Table 9. Characteristics per type; PZU6.2BA to PZU36BA and PZU6.2BA/DG to PZU36BA/DG

T_j = 25 °C unless otherwise specified.

PZUxBA	Sel	Working voltage V_Z (V)		Differential resistance r_{dif} (Ω)		Reverse current I_R (nA)		Temperature coefficient S_Z (mV/K)	Diode capacitance C_d (pF)[1]	Non-repetitive peak reverse current I_{ZSM} (A)[2]
		I_Z = 5 mA		I_Z = 0.5 mA	I_Z = 5 mA			I_Z = 5 mA		
		Min	Max	Max	Max	Max	V_R (V)	Typ	Max	Max
6.2	B	5.86	6.53	80	30	500	3	2.7	250	5.5
	B1	5.86	6.12							
	B2	6.06	6.33							
	B3	6.26	6.53							
6.8	B	6.47	7.14	60	20	500	3.5	3.4	215	5.5
	B1	6.47	6.73							
	B2	6.65	6.93							
	B3	6.86	7.14							
7.5	B	7.06	7.84	60	10	500	4	4.0	170	3.5
	B1	7.06	7.36							
	B2	7.28	7.60							
	B3	7.52	7.84							
8.2	B	7.76	8.64	60	10	500	5	4.6	150	3.5
	B1	7.76	8.1							
	B2	8.02	8.36							
	B3	8.28	8.64							
9.1	B	8.56	9.55	60	10	500	6	5.5	120	3.5
	B1	8.56	8.93							
	B2	8.85	9.23							
	B3	9.15	9.55							
10	B	9.45	10.55	60	10	100	7	6.4	110	3.5
	B1	9.45	9.87							
	B2	9.77	10.21							
	B3	10.11	10.55							
11	B	10.44	11.56	60	10	100	8	7.4	108	3
	B1	10.44	10.88							
	B2	10.76	11.22							
	B3	11.1	11.56							
12	B	11.42	12.6	80	10	100	9	8.4	105	3
	B1	11.42	11.9							
	B2	11.74	12.24							
	B3	12.08	12.6							
13	B	12.47	13.96	80	10	100	10	9.4	103	2.5
	B1	12.47	13.03							
	B2	12.91	13.49							
	B3	13.37	13.96							

© NXP B.V. 2008. All rights reserved.

Table 9. Characteristics per type; PZU6.2BA to PZU36BA and PZU6.2BA/DG to PZU36BA/DG *...continued*

T_j = 25 °C unless otherwise specified.

PZUxBA	Sel	Working voltage V_Z (V)		Differential resistance r_{dif} (Ω)		Reverse current I_R (nA)		Temperature coefficient S_Z (mV/K)	Diode capacitance C_d (pF)[1]	Non-repetitive peak reverse current I_{ZSM} (A)[2]
		I_Z = 5 mA		I_Z = 0.5 mA	I_Z = 5 mA			I_Z = 5 mA		
		Min	Max	Max	Max	Max	V_R (V)	Typ	Max	Max
14	B2	13.70	14.30	80	10	100	11	10.4	101	2
15	B	13.84	15.52	80	15	50	11	11.4	99	2
	B1	13.84	14.46							
	B2	14.34	14.98							
	B3	14.85	15.52							
16	B	15.37	17.09	80	20	50	12	12.4	97	1.5
	B1	15.37	16.01							
	B2	15.85	16.51							
	B3	16.35	17.09							
18	B	16.94	19.03	80	20	50	13	14.4	93	1.5
	B1	16.94	17.7							
	B2	17.56	18.35							
	B3	18.21	19.03							
20	B	18.86	21.08	100	20	50	15	16.4	88	1.5
	B1	18.86	19.7							
	B2	19.52	20.39							
	B3	20.21	21.08							
22	B	20.88	23.17	100	25	50	17	18.4	84	1.3
	B1	20.88	21.77							
	B2	21.54	22.47							
	B3	22.23	23.17							
24	B	22.93	25.57	120	30	50	19	20.4	80	1.3
	B1	22.93	23.96							
	B2	23.72	24.78							
	B3	24.54	25.57							
27	B	25.1	28.9	150	40	50	21	23.4	73	1
30	B	28	32	200	40	50	23	26.6	66	1
33	B	31	35	250	40	50	25	29.7	60	0.9
36	B	34	38	300	60	50	27	33.0	59	0.8

[1] f = 1 MHz; V_R = 0 V

[2] t_p = 100 µs; square wave; T_j = 25 °C prior to surge

© NXP B.V. 2008. All rights reserved.

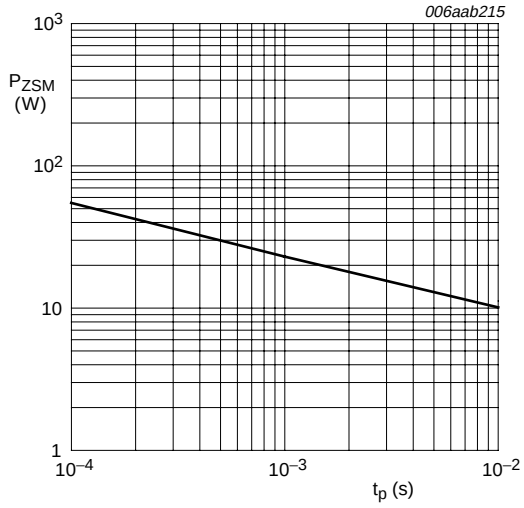

T_j = 25 °C (prior to surge)

Fig 1. Non-repetitive peak reverse power dissipation as a function of pulse duration; maximum values

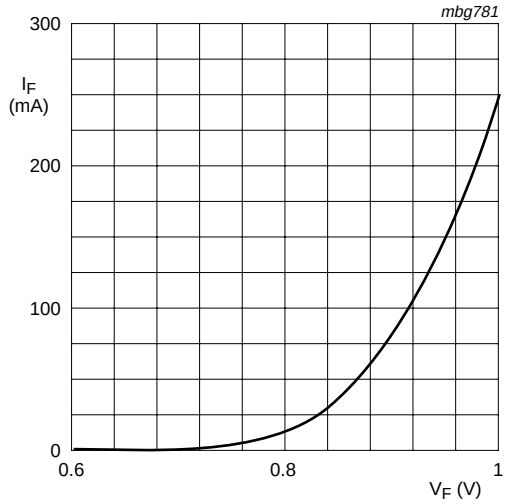

T_j = 25 °C

Fig 2. Forward current as a function of forward voltage; typical values

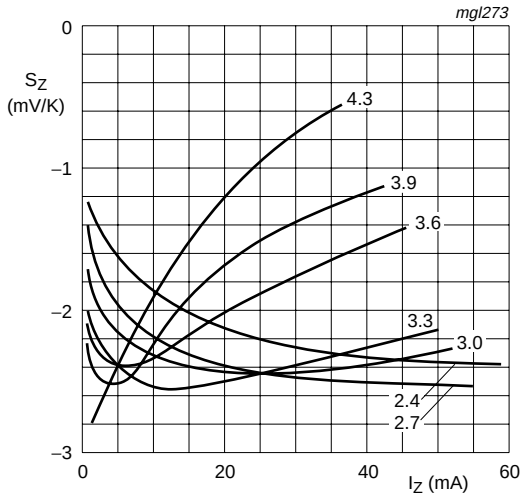

T_j = 25 °C to 150 °C

V_Z = 2.4 V to 4.3 V

Fig 3. Temperature coefficient as a function of working current; typical values

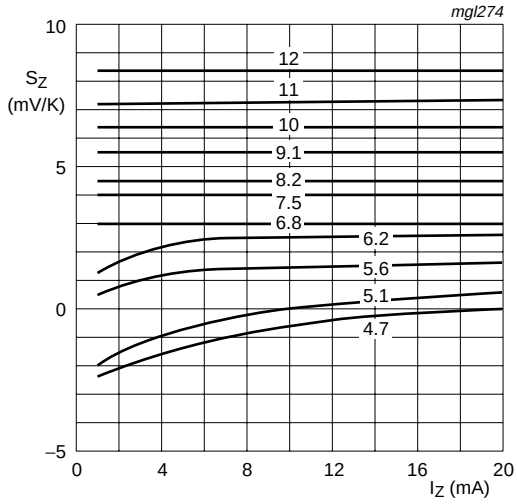

T_j = 25 °C to 150 °C

V_Z = 4.7 V to 12 V

Fig 4. Temperature coefficient as a function of working current; typical values

© NXP B.V. 2008. All rights reserved.

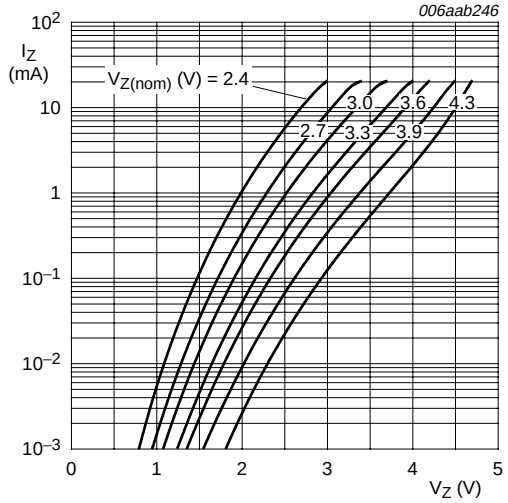

T_j = 25 °C

V_Z = 2.4 V to 4.3 V

Fig 5. Working current as a function of working voltage; typical values

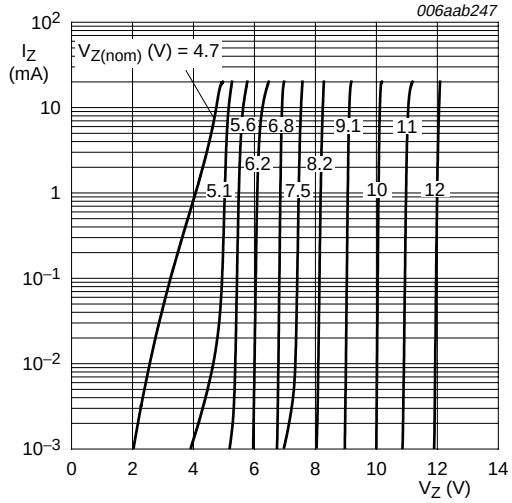

T_j = 25 °C

V_Z = 4.7 V to 12 V

Fig 6. Working current as a function of working voltage; typical values

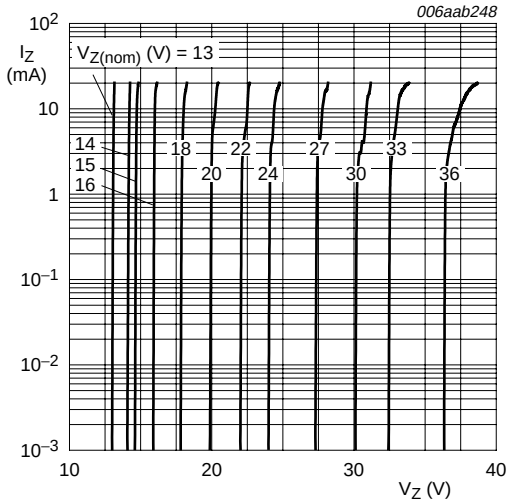

T_j = 25 °C

V_Z = 13 V to 36 V

Fig 7. Working current as a function of working voltage; typical values

© NXP B.V. 2008. All rights reserved.

8. Test information

8.1 Quality information

This product has been qualified in accordance with the Automotive Electronics Council (AEC) standard *Q101 - Stress test qualification for discrete semiconductors*, and is suitable for use in automotive applications.

9. Package outline

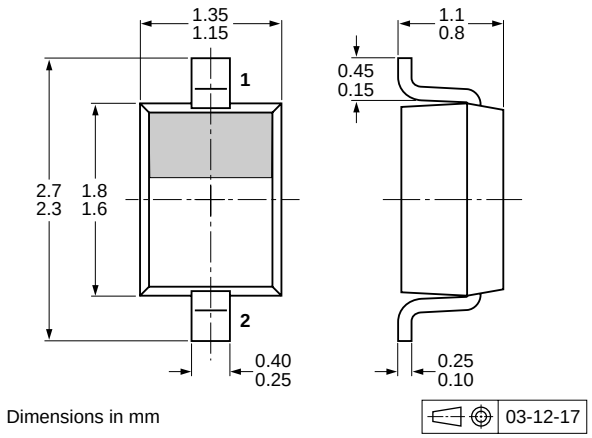

Fig 8. Package outline SOD323 (SC-76)

10. Packing information

Table 10. Packing methods

The indicated -xxx are the last three digits of the 12NC ordering code.[1]

Type number	Package	Description	Packing quantity	
			3000	10000
PZU2.4BA to PZU36BA	SOD323	4 mm pitch, 8 mm tape and reel	-115	-135
PZU2.4BA/DG to PZU36BA/DG				

[1] For further information and the availability of packing methods, see Section 13.

© NXP B.V. 2008. All rights reserved.

11. Soldering

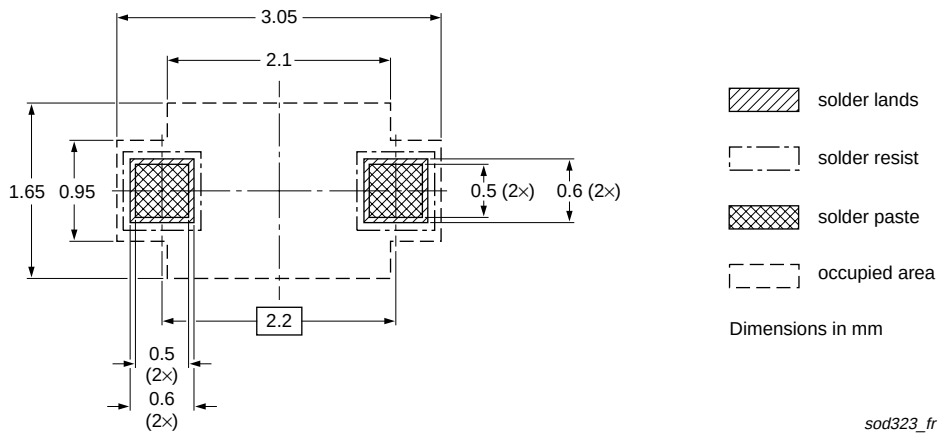

Fig 9. Reflow soldering footprint SOD323 (SC-76)

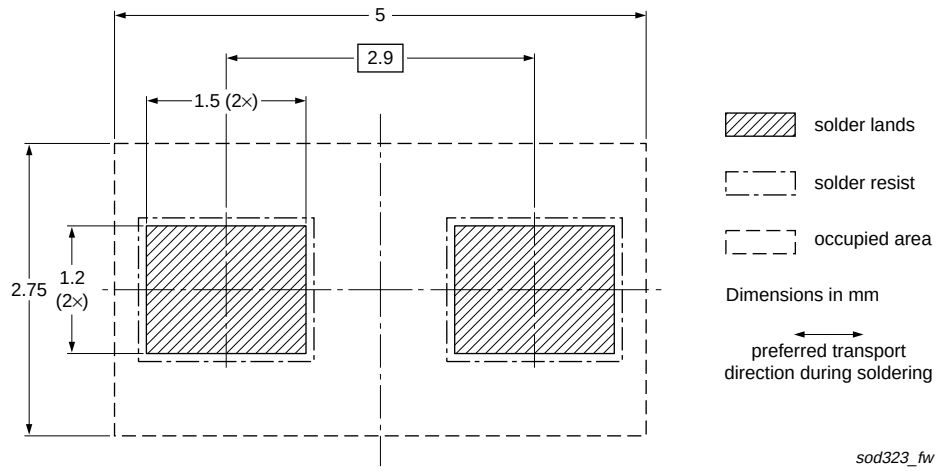

Fig 10. Wave soldering footprint SOD323 (SC-76)

© NXP B.V. 2008. All rights reserved.

12. Revision history

Table 11. Revision history

Document ID	Release date	Data sheet status	Change notice	Supersedes
PZUXBA_SER_1	20080919	Product data sheet	-	-

© NXP B.V. 2008. All rights reserved.

13. Legal information

13.1 Data sheet status

Document status[1][2]	Product status[3]	Definition
Objective [short] data sheet	Development	This document contains data from the objective specification for product development.
Preliminary [short] data sheet	Qualification	This document contains data from the preliminary specification.
Product [short] data sheet	Production	This document contains the product specification.

[1] Please consult the most recently issued document before initiating or completing a design.

[2] The term 'short data sheet' is explained in section "Definitions".

[3] The product status of device(s) described in this document may have changed since this document was published and may differ in case of multiple devices. The latest product status information is available on the Internet at URL http://www.nxp.com.

13.2 Definitions

Draft — The document is a draft version only. The content is still under internal review and subject to formal approval, which may result in modifications or additions. NXP Semiconductors does not give any representations or warranties as to the accuracy or completeness of information included herein and shall have no liability for the consequences of use of such information.

Short data sheet — A short data sheet is an extract from a full data sheet with the same product type number(s) and title. A short data sheet is intended for quick reference only and should not be relied upon to contain detailed and full information. For detailed and full information see the relevant full data sheet, which is available on request via the local NXP Semiconductors sales office. In case of any inconsistency or conflict with the short data sheet, the full data sheet shall prevail.

13.3 Disclaimers

General — Information in this document is believed to be accurate and reliable. However, NXP Semiconductors does not give any representations or warranties, expressed or implied, as to the accuracy or completeness of such information and shall have no liability for the consequences of use of such information.

Right to make changes — NXP Semiconductors reserves the right to make changes to information published in this document, including without limitation specifications and product descriptions, at any time and without notice. This document supersedes and replaces all information supplied prior to the publication hereof.

Suitability for use — NXP Semiconductors products are not designed, authorized or warranted to be suitable for use in medical, military, aircraft, space or life support equipment, nor in applications where failure or malfunction of an NXP Semiconductors product can reasonably be expected to result in personal injury, death or severe property or environmental damage. NXP Semiconductors accepts no liability for inclusion and/or use of NXP Semiconductors products in such equipment or applications and therefore such inclusion and/or use is at the customer's own risk.

Applications — Applications that are described herein for any of these products are for illustrative purposes only. NXP Semiconductors makes no representation or warranty that such applications will be suitable for the specified use without further testing or modification.

Limiting values — Stress above one or more limiting values (as defined in the Absolute Maximum Ratings System of IEC 60134) may cause permanent damage to the device. Limiting values are stress ratings only and operation of the device at these or any other conditions above those given in the Characteristics sections of this document is not implied. Exposure to limiting values for extended periods may affect device reliability.

Terms and conditions of sale — NXP Semiconductors products are sold subject to the general terms and conditions of commercial sale, as published at http://www.nxp.com/profile/terms, including those pertaining to warranty, intellectual property rights infringement and limitation of liability, unless explicitly otherwise agreed to in writing by NXP Semiconductors. In case of any inconsistency or conflict between information in this document and such terms and conditions, the latter will prevail.

No offer to sell or license — Nothing in this document may be interpreted or construed as an offer to sell products that is open for acceptance or the grant, conveyance or implication of any license under any copyrights, patents or other industrial or intellectual property rights.

Quick reference data — The Quick reference data is an extract of the product data given in the Limiting values and Characteristics sections of this document, and as such is not complete, exhaustive or legally binding.

13.4 Trademarks

Notice: All referenced brands, product names, service names and trademarks are the property of their respective owners.

14. Contact information

For more information, please visit: **http://www.nxp.com**

For sales office addresses, please send an email to: **salesaddresses@nxp.com**

© NXP B.V. 2008. All rights reserved.

15. Contents

1 Product profile 1
1.1 General description. 1
1.2 Features 1
1.3 Applications 1
1.4 Quick reference data. 1
2 Pinning information 2
3 Ordering information 2
4 Marking 3
5 Limiting values 4
6 Thermal characteristics. 4
7 Characteristics 4
8 Test information 10
8.1 Quality information 10
9 Package outline 10
10 Packing information. 10
11 Soldering 11
12 Revision history 12
13 Legal information 13
13.1 Data sheet status 13
13.2 Definitions 13
13.3 Disclaimers 13
13.4 Trademarks 13
14 Contact information 13
15 Contents 14

Please be aware that important notices concerning this document and the product(s) described herein, have been included in section 'Legal information'.

founded by PHILIPS

© NXP B.V. 2008. All rights reserved.

For more information, please visit: http://www.nxp.com
For sales office addresses, please send an email to: salesaddresses@nxp.com

Date of release: 19 September 2008
Document identifier: PZUXBA_SER_1

Looking for pricing, stock, or lifecycle information?

Click below to explore more details on WIN SOURCE:

- View PZU15B2A,115 on WIN SOURCE
- Nexperia USA Inc. Information

Optimize Your Supply Chain with WIN SOURCE Solutions

- Global Sourcing Solution
- Obsolete Management
- Cost Control Management
- Shortage Management
- Alternative Solution
- Excess Inventory Management