THE DATASHEET OF

MWSEA1-3-01

www.win-source.net 0086-755-83957316

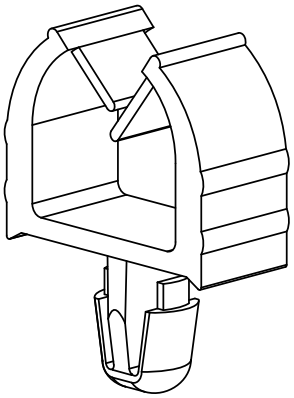

NYLON 6/6 (RMS-01) COLOR: NATURAL PART NO.	FLAME RETARDANT NYLON 6/6 (RMS-19) COLOR: NATURAL PART NO.	"A" REF.	"B" REF.	"C"
*MWSEA1-1-01	*MWSEA1-1-19	.29 (7.3)	.12 (3.0)	.36
MWSEA1-2-01	MWSEA1-2-19	.36 (9.1)	.16 (3.9)	.42
MWSEA1-3-01	MWSEA1-3-19	.44 (11.2)	.24 (6.0)	.47
MWSEA1-4-01	MWSEA1-4-19	.51 (13.0)	.30 (7.7)	
*MWSEA1-1-1-01	*MWSEA1-1-1-19	.29 (7.3)	.12 (3.0)	.36
MWSEA1-1-2-01	MWSEA1-1-2-19	.36 (9.1)	.16 (3.9)	.42
MWSEA1-1-3-01	MWSEA1-1-3-19	.44 (11.2)	.24 (6.0)	.47
MWSEA1-1-4-01	MWSEA1-1-4-19	.51 (13.0)	.30 (7.7)	

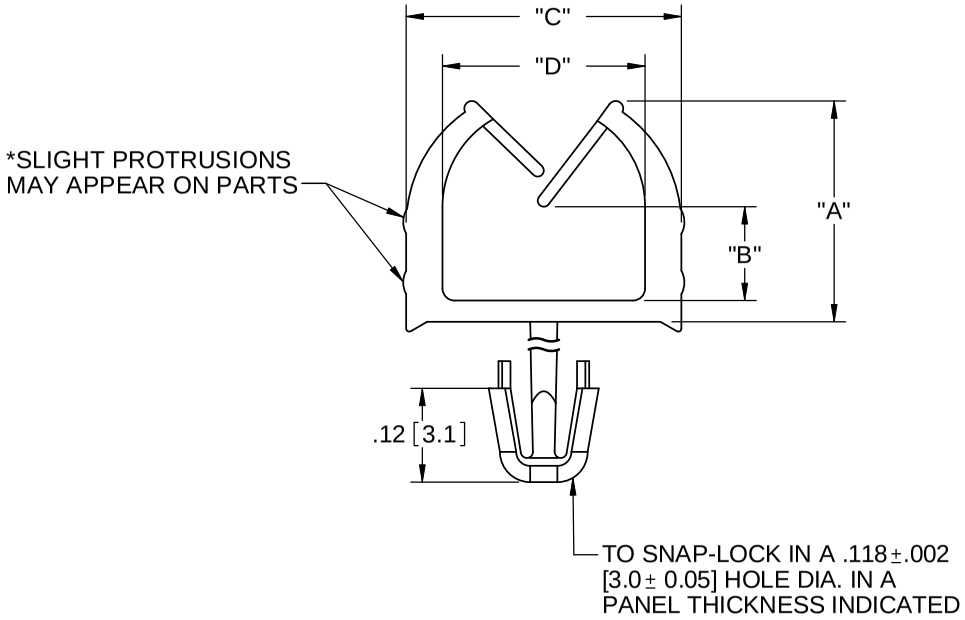

REV.	DESCRIPTION	ENGR.	DATE
E	SEE CO 200190 FOR CHANGES	S.K.	05/22/08
D	COMPLETELY REDRAWN, SEE ECN #709	S.M.	10.06.03
C	UPDATED TABLE, AND ADDED .093 [2.36] PANEL THK.	S.M.	05.01.02
B	P/N FOR RMS-19 ADDED TO TABLE	J.L.	08.08.00
A	PART # CHART ADDED, DIM [4.0] WAS [4.3]	J.L.	03.06.98

TITLE: MICRO WIRE SADDLE

CREATED USING SOLIDWORKS

TOLERANCES UNLESS NOTED
.XX=±.010
.XXX=±.005
FRAC.=±1/64
ANG.=±1°

FILE #: MWSEA1 | DWN: SM | APP: -
SHEET: 1 OF 1 | SHEET SIZE: A | DT: 10/06/03 | CHKD: -
RE: RICHCO, INC.

RICHCO, INC.
ENG@RICHCO-INC.COM
(773) 539-4060

Looking for pricing, stock, or lifecycle information?

Click below to explore more details on WIN SOURCE:

- View MWSEA1-3-01 on WIN SOURCE
- Essentra Components Information

Optimize Your Supply Chain with WIN SOURCE Solutions

- Global Sourcing Solution
- Obsolete Management
- Cost Control Management
- Shortage Management
- Alternative Solution
- Excess Inventory Management