THE DATASHEET OF

RSS085N05FU6TB

www.win-source.net 0086-755-83957316

Transistor

4V Drive Nch MOS FET

RSS085N05

●Structure
Silicon N-channel
MOS FET

●External dimensions (Unit : mm)

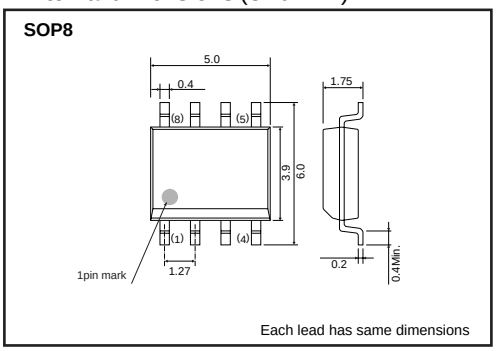

●Features
1) Built-in G-S Protection Diode.
2) Small and Surface Mount Package (SOP8).

●Applications
Power switching , DC / DC converter, Inverter

●Packaging dimensions

Type	Package	Taping
	Code	TB
	Basic ordering unit (pieces)	2500
RSS085N05		○

●Absolute maximum ratings (Ta=25°C)

Parameter		Symbol	Limits	Unit
Drain-source voltage		V_{DSS}	45	V
Gate-source voltage		V_{GSS}	20	V
Drain current	Continuous	I_D	±8.5	A
	Pulsed	I_{DP} *1	±34	A
Source current (Body diode)	Continuous	I_S	1.6	A
	Pulsed	I_{SP} *1	34	A
Total power dissipation		P_D *2	2	W
Chanel temperature		T_{ch}	150	°C
Range of Storage temperature		T_{stg}	-55 to +150	°C

*1 PW≤10μs、Duty cycle≤1%
*2 Mounted on a ceramic board

●Equivalent circuit

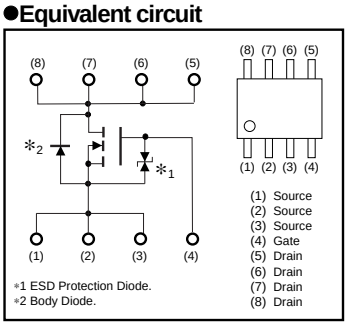

* A protection diode is included between the gate and the source terminals to protect the diode against static electricity when the product is in use.Use a protection circuit when the fixed voltage are exceeded.

●Thermal resistance

Parameter	Symbol	Limits	Unit
Chanel to ambient	$R_{th(ch-a)}$ *	62.5	°C/W

* Mounted on a ceramic board

ROHM

●**Electrical characteristics** (Ta=25°C)

Parameter	Symbol	Min.	Typ.	Max.	Unit	Conditions
Gate-source leakage	I_{GSS}	–	–	10	μA	V_{GS}=20V, V_{DS}=0V
Drain-source breakdown voltage	$V_{(BR)\ DSS}$	45	–	–	V	I_D= 1mA, V_{GS}=0V
Zero gate voltage drain current	I_{DSS}	–	–	1	μA	V_{DS}= 45V, V_{GS}=0V
Gate threshold voltage	$V_{GS\ (th)}$	1.0	–	2.5	V	V_{DS}= 10V, I_D= 1mA
Static drain-source on-state resistance	$R_{DS\ (on)}$*	–	13	18	mΩ	I_D= 8.5A, V_{GS}= 10V
		–	16	23	mΩ	I_D= 8.5A, V_{GS}= 4.5V
		–	18	25	mΩ	I_D= 8.5A, V_{GS}= 4V
Forward transfer admittance	$\lvert Y_{fs} \rvert$ *	7.0	–	–	S	V_{DS}= 10V, I_D= 8.5A
Input capacitance	C_{iss}	–	1500	–	pF	V_{DS}= 10V
Output capacitance	C_{oss}	–	350	–	pF	V_{GS}=0V
Reverse transfer capacitance	C_{rss}	–	170	–	pF	f=1MHz
Turn-on delay time	$t_{d\ (on)}$ *	–	19	–	ns	V_{DD}≒ 25V I_D= 4.0A V_{GS}= 10V R_L=6.3Ω R_G=10Ω
Rise time	t_r *	–	25	–	ns	
Turn-off delay time	$t_{d\ (off)}$ *	–	71	–	ns	
Fall time	t_f *	–	24	–	ns	
Total gate charge	Q_g *	–	15.3	21.4	nC	V_{DD}≒ 25V V_{GS}= 5V I_D= 8.5A R_L=2.9Ω R_G=10Ω
Gate-source charge	Q_{gs} *	–	4.4	–	nC	
Gate-drain charge	Q_{gd} *	–	6.0	–	nC	

*Pulsed

Body diode characteristics (Source-Drain) (Ta=25°C)

Parameter	Symbol	Min.	Typ.	Max.	Unit	Conditions
Forward voltage	V_{SD}*	–	–	1.2	V	I_S= 8.5A, V_{GS}=0V

*Pulsed

●Electrical characteristic curves

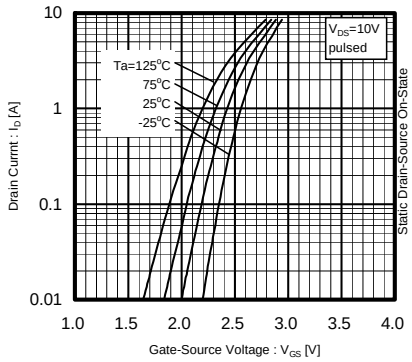

Fig.1 Typical Transfer Characteristics

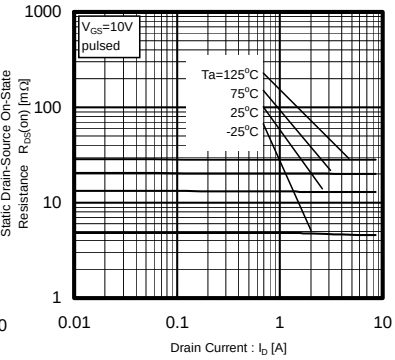

Fig.2 Static Drain-Source On-State Resistance vs. Drain Current (1)

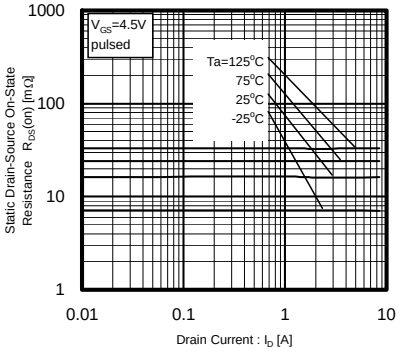

Fig.3 Static Drain-Source On-State Resistance vs. Drain Current (2)

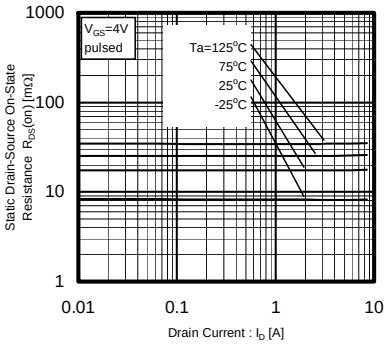

Fig.4 Static Drain-Source On-State Resistance vs. Drain Current (3)

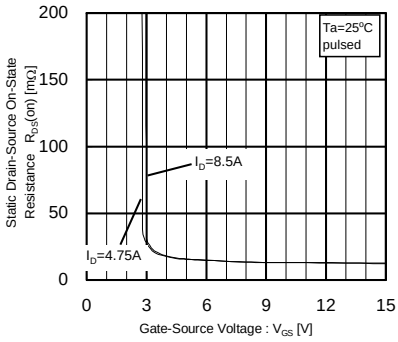

Fig.5 Static Drain-Source On-State Resistance vs. Gate-Source Voltage

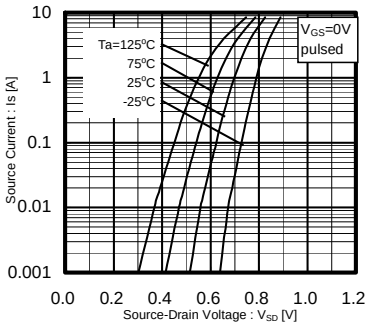

Fig.6 Source-Current vs. Source-Drain Voltage

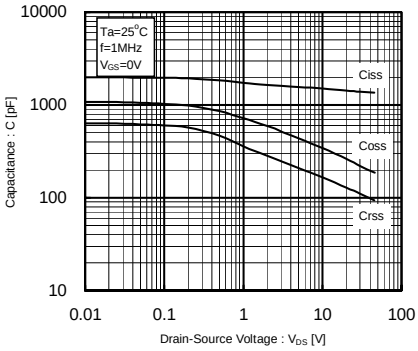

Fig.7 Typical capacitance vs. Source-Drain Voltage

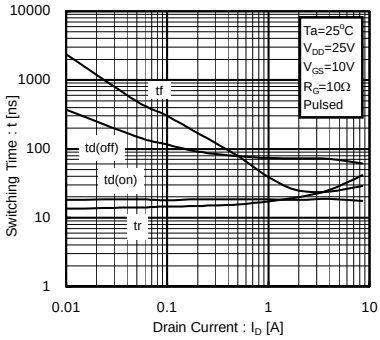

Fig.8 Switching Characteristics

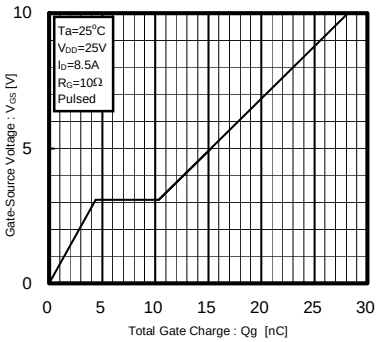

Fig.9 Dynamic Input Characteristics

●**Measurement circuits**

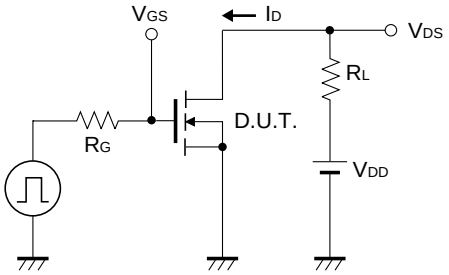

Fig.10 Switching Time Test Circuit

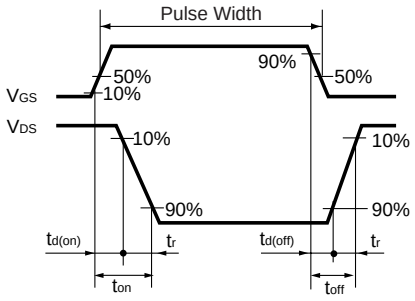

Fig.11 Switching Time Waveforms

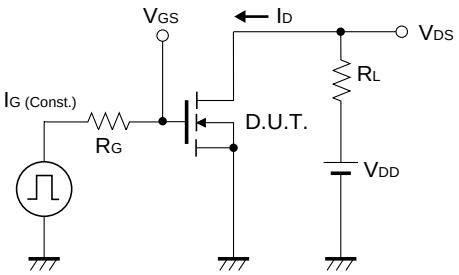

Fig.12 Gate Charge Test Circuit

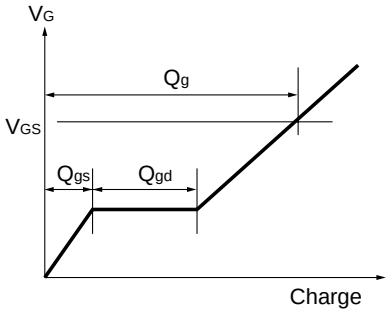

Fig.13 Gate Charge Waveform

Notes

- No technical content pages of this document may be reproduced in any form or transmitted by any means without prior permission of ROHM CO.,LTD.
- The contents described herein are subject to change without notice. The specifications for the product described in this document are for reference only. Upon actual use, therefore, please request that specifications to be separately delivered.
- Application circuit diagrams and circuit constants contained herein are shown as examples of standard use and operation. Please pay careful attention to the peripheral conditions when designing circuits and deciding upon circuit constants in the set.
- Any data, including, but not limited to application circuit diagrams information, described herein are intended only as illustrations of such devices and not as the specifications for such devices. ROHM CO.,LTD. disclaims any warranty that any use of such devices shall be free from infringement of any third party's intellectual property rights or other proprietary rights, and further, assumes no liability of whatsoever nature in the event of any such infringement, or arising from or connected with or related to the use of such devices.
- Upon the sale of any such devices, other than for buyer's right to use such devices itself, resell or otherwise dispose of the same, no express or implied right or license to practice or commercially exploit any intellectual property rights or other proprietary rights owned or controlled by
- ROHM CO., LTD. is granted to any such buyer.
- Products listed in this document are no antiradiation design.

The products listed in this document are designed to be used with ordinary electronic equipment or devices (such as audio visual equipment, office-automation equipment, communications devices, electrical appliances and electronic toys).
Should you intend to use these products with equipment or devices which require an extremely high level of reliability and the malfunction of with would directly endanger human life (such as medical instruments, transportation equipment, aerospace machinery, nuclear-reactor controllers, fuel controllers and other safety devices), please be sure to consult with our sales representative in advance.

About Export Control Order in Japan

Products described herein are the objects of controlled goods in Annex 1 (Item 16) of Export Trade Control Order in Japan.
In case of export from Japan, please confirm if it applies to "objective" criteria or an "informed" (by MITI clause) on the basis of "catch all controls for Non-Proliferation of Weapons of Mass Destruction.

Looking for pricing, stock, or lifecycle information?

Click below to explore more details on WIN SOURCE:

- View RSS085N05FU6TB on WIN SOURCE
- Rohm Semiconductor Information

Optimize Your Supply Chain with WIN SOURCE Solutions

- Global Sourcing Solution
- Obsolete Management
- Cost Control Management
- Shortage Management
- Alternative Solution
- Excess Inventory Management