MD1711

High-Speed Integrated Ultrasound Driver IC

Features

- Drives Two Ultrasound Transducer Channels
- Generates a Five-Level Waveform
- Drives 12 High-Voltage MOSFETs
- ±2A Source-and-Sink Peak Currents
- Up to 20 MHz Output Frequency
- 12 V/ns Slew Rate
- ±3 ns Matched Delay Times
- Less than –40 dB Second Harmonic
- Two Separate Gate Drive Voltages
- 1.8V to 3.3V CMOS Logic Interface

Applications

- Medical Ultrasound Imaging
- Piezoelectric Transducer Drivers
- Non-Destructive Testing (NDT)
- Metal Flaw Detection
- Sonar Transmitter

General Description

The MD1711 is a two-channel logic controller circuit with low-impedance MOSFET gate drivers. It is intended to be used with external FETs as a five-level high-voltage and high-speed transmitter. The MD1711 is designed for medical ultrasound imaging applications but can also be used for metal flaw detection, NDT and for driving piezoelectric transducers.

The MD1711 has two sets of control logic inputs, one for Channel A and one for Channel B. Each channel consists of three pairs of MOSFET gate drivers. These drivers are designed to match the drive requirements of the TC6320. One MD1711 drives six TC6320s. Each driver consists of an N-channel and a P-channel MOSFET. They are designed to have the same impedance and can provide peak currents of 2 amps.

Package Types

48-lead LQFP
(Top view)

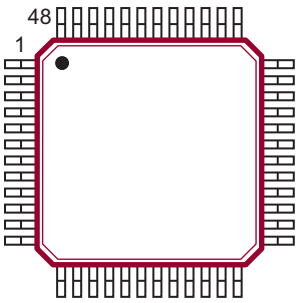

48-lead QFN
(Top view)

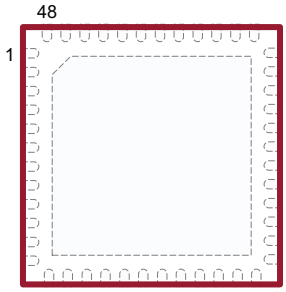

See Table 2-1 for pin information.

© 2019 Microchip Technology Inc.

Functional Block Diagram

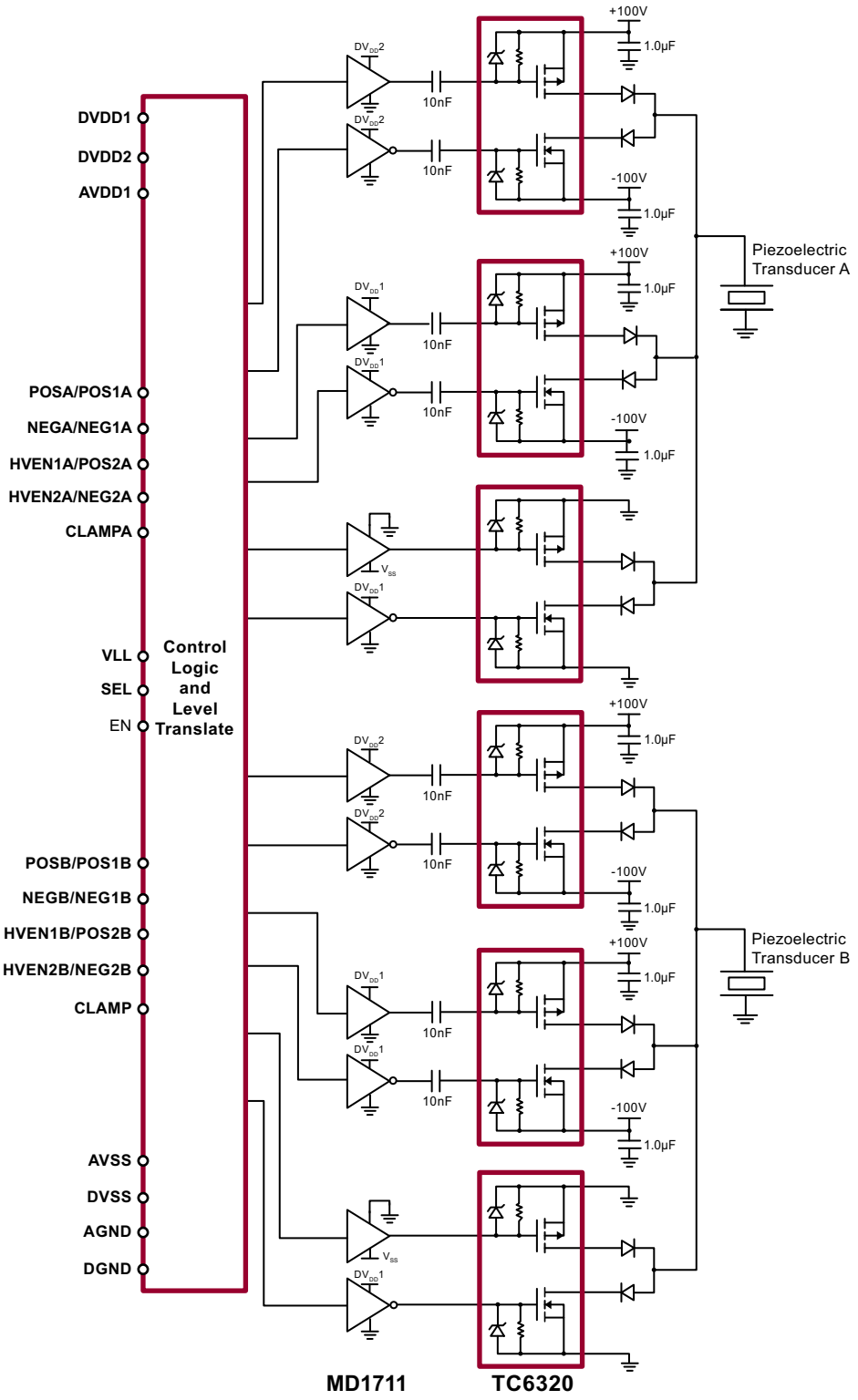

© 2019 Microchip Technology Inc.

Typical Application Circuit

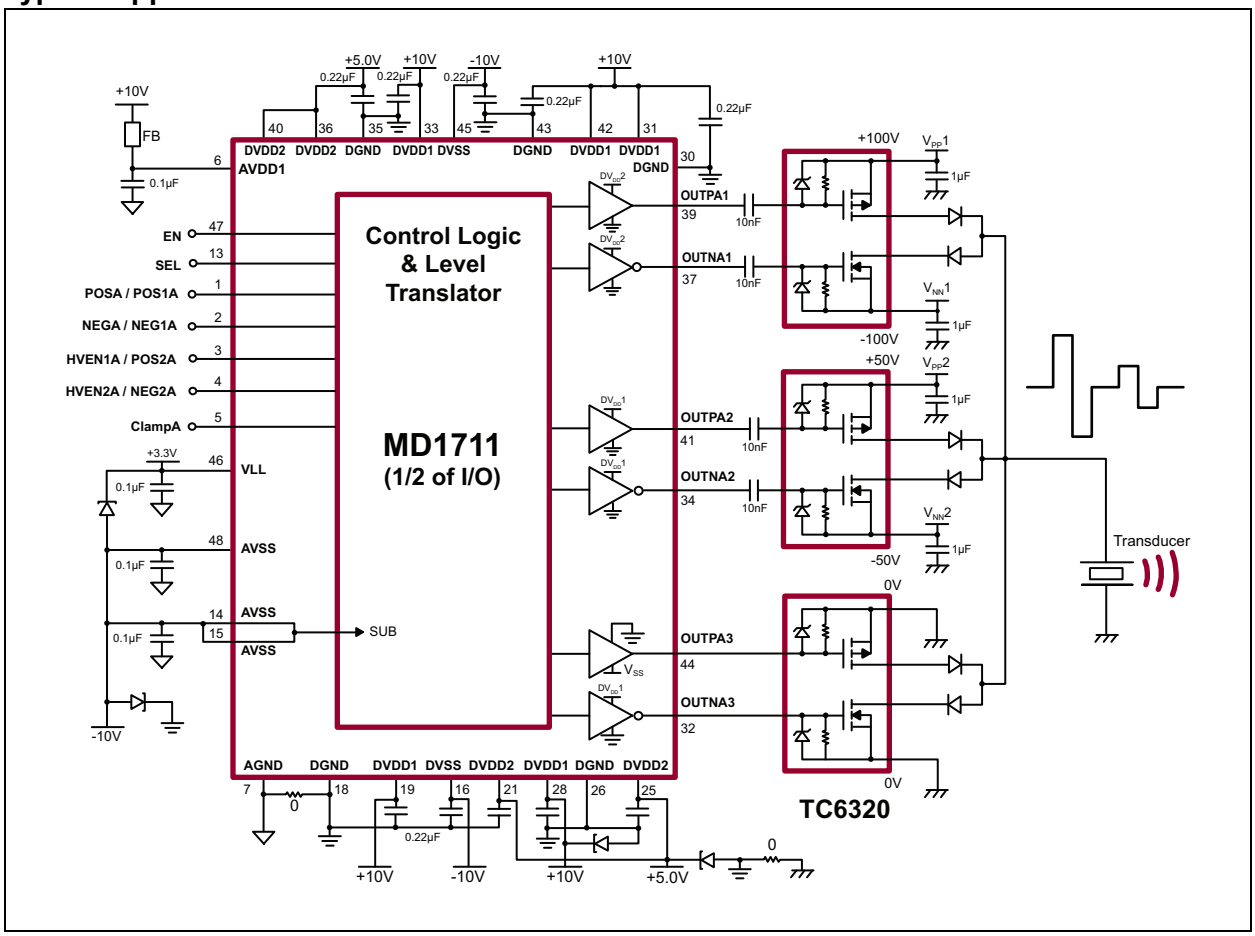

1.0 ELECTRICAL CHARACTERISTICS

Absolute Maximum Ratings†

Logic Supply Voltage, V_{LL} ..... –0.5V to +5.5V
Positive Gate Drive Supply, AV_{DD1}, DV_{DD1}, DV_{DD2} ..... –0.5V to +15V
Negative Gate Drive Supply, AV_{SS}, DV_{SS} ..... –15V to +0.5V
Operating Junction Temperature, T_J ..... 0°C to +125°C
Storage Temperature, T_S ..... –65°C to +150°C
Power Dissipation (48-lead LQFP) 1.92W
Power Dissipation (48-lead QFN) 5.55W

† Notice: Stresses above those listed under "Absolute Maximum Ratings" may cause permanent damage to the device. This is a stress rating only, and functional operation of the device at those or any other conditions above those indicated in the operational sections of this specification is not intended. Exposure to maximum rating conditions for extended periods may affect device reliability.

OPERATING SUPPLY VOLTAGES AND CURRENTS

Electrical Specifications: Over operating conditions unless otherwise specified, $AV_{DD}1 = DV_{DD}1 = DV_{DD}2 = 10V$, $AV_{SS} = DV_{SS} = –10V$, $V_{LL} = 3.3V$, $T_A = 25°C$.

Parameter	Sym.	Min.	Typ.	Max.	Unit	Conditions
Logic Supply	V_{LL}	1.8	3.3	5	V	
Positive Drive Bias Supply	AV_{DD1}	8	10	12.6	V	
Positive Gate Drive Supply	DV_{DD1}	4.75	—	12.6	V	
Positive Gate Drive Supply	DV_{DD2}	4.75	—	12.6	V	
Negative Gate Drive and Bias Supply	AV_{SS}, DV_{SS}	–12	–10	–8	V	
Logic Supply Current	I_{VLL}	—	2	—	mA	All channels on at 5 MHz, no load
Positive Bias Current	I_{AVDD1}	—	5	—	mA	
Negative Drive and Bias Supply Currents	I_{AVSS}, I_{DVSS}	—	20	—	mA	
Positive Drive Current 1	I_{DVDD1}	—	55	—	mA	
Positive Drive Current 2	I_{DVDD2}	—	13	—	mA	All channels on at 5 MHz, $DV_{DD}2 = 5V$, no load
V_{AVDD1} Quiescent Current	I_{AVDD1Q}	—	2	—	mA	EN = low, all inputs low or high
V_{AVSS} Quiescent Current	I_{AVSSQ}	—	0.75	—	mA	
V_{DVDD1} Quiescent Current	I_{DVDD1Q}	—	—	10	µA	
V_{DVDD2} Quiescent Current	I_{DVDD2Q}	—	—	10	µA	
Logic Supply Current	I_{VLLQ}	—	1	—	mA	

© 2019 Microchip Technology Inc.

DC ELECTRICAL CHARACTERISTICS

Electrical Specifications: Over operating conditions unless otherwise specified, $AV_{DD}1 = DV_{DD}1 = DV_{DD}2 = 10V$, $AV_{SS} = DV_{SS} = –10V$, $V_{LL} = 3.3V$, $T_A = 0°C$ to 70°C.

Parameter		Sym.	Min.	Typ.	Max.	Unit	Conditions
P-CHANNEL AND N-CHANNEL GATE DRIVER OUTPUTS							
Output Sink Resistance	P-Channel	R_{SINK}	—	—	6	Ω	I_{SINK} = 100 mA
	N-Channel		—	—	10	Ω	I_{SINK} = 100 mA
Output Source resistance	P-Channel	R_{SOURCE}	—	—	6	Ω	I_{SOURCE} = 100 mA
	N-Channel		—	—	10	Ω	I_{SOURCE} = 100 mA
Peak Output Sink Current	P-Channel	I_{SINK}	—	2	—	A	
	N-Channel		—	1.5	—	A	
Peak Output Source Current	P-Channel	I_{SOURCE}	—	2	—	A	
	N-Channel		—	1.5	—	A	
LOGIC INPUTS							
Input Logic High Voltage		V_{IH}	0.8 V_{LL}	—	V_{LL}	V	
Input Logic Low Voltage		V_{IL}	0	—	0.2 V_{LL}	V	
Input Logic High Current		I_{IH}	—	—	1	µA	
Input Logic Low Current		I_{IL}	–1	—	—	µA	

AC ELECTRICAL CHARACTERISTICS

Electrical Specifications: Over operating conditions unless otherwise specified, $AV_{DD}1 = DV_{DD}1 = DV_{DD}2 = 10V$, $AV_{SS} = DV_{SS} = –10V$, $V_{LL} = 3.3V$, $T_A = 0°C$ to 70°C.

Parameter	Sym.	Min.	Typ.	Max.	Unit	Conditions
Output Frequency Range	f_{OUT}	—	—	20	MHz	
Propagation Delay when Output is from Low to High	t_{PH}	—	19	—	ns	No load (See **Timing Waveforms**.)
Propagation Delay when Output is from High to Low	t_{PL}	—	19	—	ns	No load (See **Timing Waveforms**.)
Output Rise Time	t_r	—	8	—	ns	1000 pF load (See **Timing Waveforms**.)
Output Fall Time	t_f	—	8	—	ns	1000 pF load (See **Timing Waveforms**.)
Delay Time Matching	Δt_{DM}	—	—	±3	ns	No load, from device to device
Output Jitter	Δt_{DLAY}	—	30	—	ps	Standard deviation of t_D samples (1 kHz)
Output Slew Rate	SR	—	12	—	V/ns	Measured at TC6320 output with 100Ω load
Second Harmonic Distortion	HD2	—	–40	—	dB	

© 2019 Microchip Technology Inc.

TEMPERATURE SPECIFICATIONS

Parameter	Sym.	Min.	Typ.	Max.	Unit	Conditions
TEMPERATURE RANGE						
Operating Junction Temperature	T_J	0	—	+125	°C	
Storage Temperature	T_S	–65	—	+150	°C	
PACKAGE THERMAL RESISTANCE						
48-lead LQFP	θ_{JA}	—	52	—	°C/W	
48-lead QFN	θ_{JA}	—	18	—	°C/W	

© 2019 Microchip Technology Inc.

Timing Waveforms

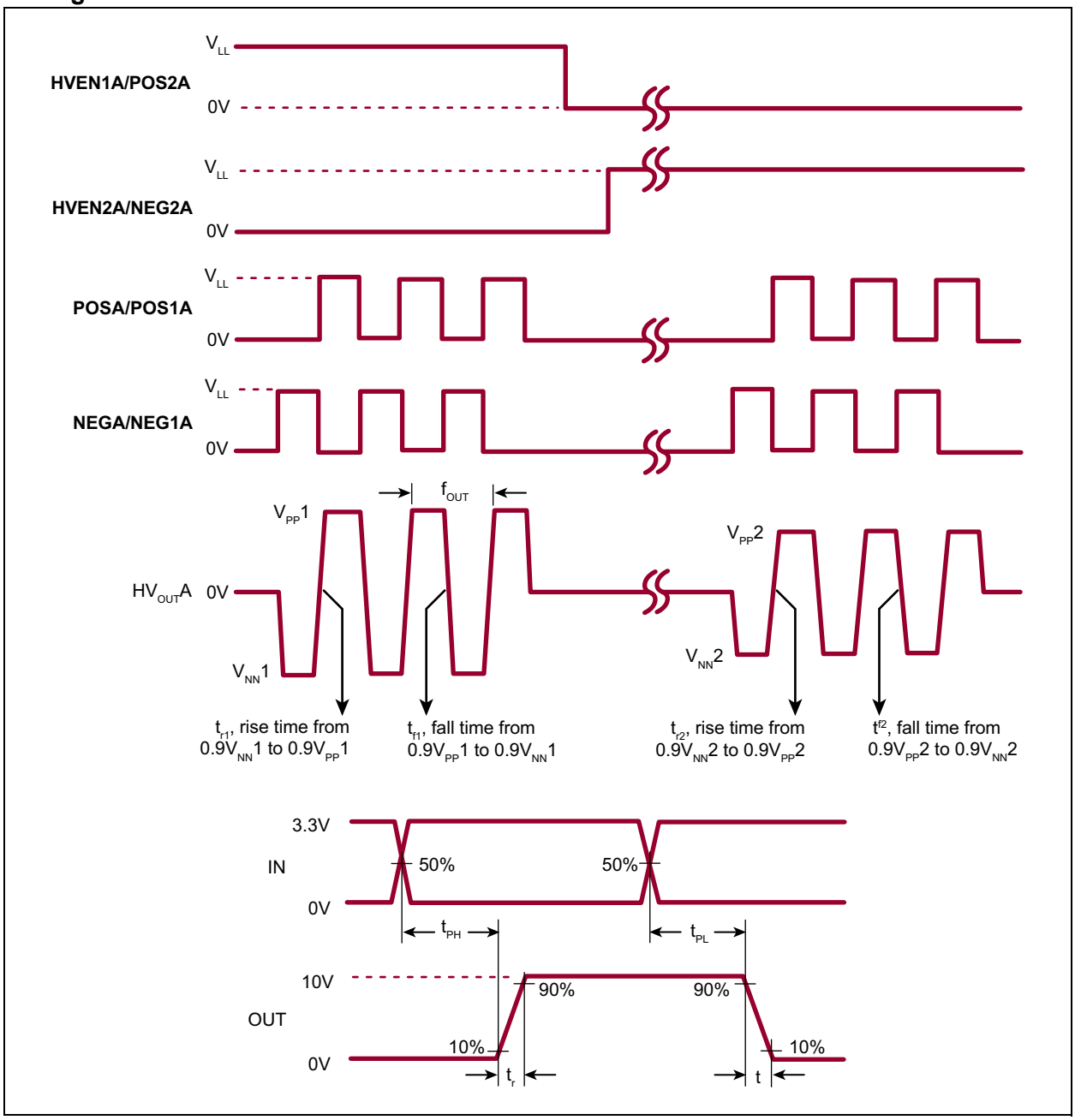

2.0 PIN DESCRIPTION

Functional descriptions for the pins are listed in Table 2-1. See **Package Types** for the location of pins.

TABLE 2-1: PIN FUNCTION TABLE

Pin Number	Pin Name	Description
1	POSA/POS1A	Logic input control for Channel A. When SEL = L, the pin is POSA. When SEL = H, the pin is POS1A.
2	NEGA/NEG1A	Logic input control for Channel A. When SEL = L, the pin is NEGA. When SEL = H, the pin is NEG1A.
3	HVEN1A/POS2A	Logic input control for Channel A. When SEL = L, the pin is HVEN1A. When SEL = H, the pin is POS2A.
4	HVEN2A/NEG2A	Logic input control for Channel A. When SEL = L, the pin is HVEN2A. When SEL = H, the pin is NEG2A.
5	CLAMPA	Used with SEL = H. Logic input control for OUT–PA3 and OUT–NA3. Connect to ground when SEL = L.
6	AVDD1	Supplies analog circuitry portion of the gate driver. Should be at the same potential as DVDD1.
7	AGND	Analog Ground
8	CLAMPB	Used with SEL = H. Logic input control for OUT–PB3 and OUT–NB3. Connect to ground when SEL = L.
9	HVEN2B/NEG2B	Logic input control for Channel B. When SEL = L, the pin is HVEN2B. When SEL = H, the pin is NEG2B.
10	HVEN1B/POS2B	Logic input control for Channel B. When SEL = L, the pin is HVEN1B. When SEL = H, the pin is POS2B.
11	NEGB/NEG1B	Logic input control for Channel B. When SEL = L, the pin is NEGB. When SEL = H, the pin is NEG1B.
12	POSB/POS1B	Logic input control for Channel B. When SEL = L, the pin is POSB. When SEL = H, the pin is POS1B.
13	SEL	Logic input select. See Table 3-2 for SEL = L and Table 3-3 for SEL = H.
14	AVSS	Negative driver supply for OUT–PA3, OUT–PB3 and bias circuits. It is also connected to the IC substrate. It should be connected to the most negative potential.
15		
16	DVSS	Gate drive supply voltage for OUT–PA3 and OUT–PB3. Supplies digital circuitry portion and the main output stage. Should be at the same potential as AVSS.
17	OUT-PB3	Output P-channel gate driver for Channel B
18	DGND	Digital Ground
19	DVDD1	Gate drive supply voltage. Supplies digital circuitry portion of the gate driver and the main output stage for OUT–PA2, OUT–NA2, OUT–NA3, OUT–PB2, OUT–NB2 and OUT–NB3. Should be at the same potential as AVDD1.
20	Out-PB2	Output P-channel gate driver for Channel B
21	DVDD2	Gate drive supply voltage. Supplies digital circuitry portion of the gate driver and the main output stage for OUT–PA1, OUT–NA1, OUT–PB1 and OUT–NB1. Can be at a different potential compared to DVDD1.
22	Out-PB1	Output P-channel gate driver for Channel B
23	N/C	No connect
24	Out-NB1	Output N-channel gate driver for Channel B

© 2019 Microchip Technology Inc.

TABLE 2-1: PIN FUNCTION TABLE

Pin Number	Pin Name	Description
25	DVDD2	Gate drive supply voltage. Supplies digital circuitry portion of the gate driver and the main output stage for OUT–PA1, OUT–NA1, OUT–PB1 and OUT–NB1. Can be at a different potential compared to DVDD1.
26	DGND	Digital Ground
27	Out-NB2	Output N-channel gate driver for Channel B
28	DVDD1	Gate drive supply voltage. Supplies digital circuitry portion of the gate driver and the main output stage for OUT–PA2, OUT–NA2, OUT–NA3, OUT–PB2, OUT–NB2 and OUT–NB3. Should be at the same potential as AVDD1.
29	Out-NB3	Output N-channel gate driver for Channel B
30	DGND	Digital Ground
31	DVDD1	Gate drive supply voltage. Supplies digital circuitry portion of the gate driver and the main output stage for OUT–PA2, OUT–NA2, OUT–NA3, OUT–PB2, OUT–NB2 and OUT–NB3. Should be at the same potential as AVDD1.
32	OUT-NA3	Output N-channel gate drivers for Channel A
33	DVDD1	Gate drive supply voltage. Supplies digital circuitry portion of the gate driver and the main output stage for OUT–PA2, OUT–NA2, OUT–NA3, OUT–PB2, OUT–NB2 and OUT–NB3. Should be at the same potential as AVDD1.
34	Out-NA2	Output N-Channel gate drivers for Channel A
35	DGND	Digital Ground
36	DVDD2	Gate drive supply voltage. Supplies digital circuitry portion of the gate driver and the main output stage for OUT–PA1, OUT–NA1, OUT–PB1 and OUT–NB1. Can be at a different potential compared to DVDD1.
37	Out-NA1	Output N-channel gate drivers for Channel A
38	N/C	No connect
39	Out-PA1	Output P-channel gate drivers for Channel A
40	DVDD2	Gate drive supply voltage. Supplies digital circuitry portion of the gate driver and the main output stage for OUT–PA1, OUT–NA1, OUT–PB1 and OUT–NB1. Can be at a different potential compared to DVDD1.
41	OUT-PA2	Output P-channel gate drivers for Channel A
42	DVDD1	Gate drive supply voltage. Supplies digital circuitry portion of the gate driver and the main output stage for OUT–PA2, OUT–NA2, OUT–NA3, OUT–PB2, OUT–NB2 and OUT–NB3. Should be at the same potential as AVDD1.
43	DGND	Digital Ground
44	Out-PA3	Output P-channel gate drivers for Channel A
45	DVSS	Gate drive supply voltage for OUT–PA3 and OUT–PB3. Supplies digital circuitry portion and the main output stage. Should be at the same potential as AVSS.
46	VLL	Logic supply voltage
47	EN	Logic input enable control. When EN = L, all P-channel output drivers are high and all N-channel output drivers are low.
48	AVSS	Negative driver supply for OUT–PA3, OUT–PB3 and bias circuits. It is also connected to the IC substrate. It should be connected to the most negative potential.
Center Pad	AVSS	For the QFN package, the center pad is at AVSS potential. It should be externally connected to AVSS.

3.0 DETAILED DESCRIPTION

TABLE 3-1: POWER-UP SEQUENCE

Step	Connection	Description
1	AV_{SS}, DV_{SS}	Negative gate drive supply and substrate bias
2	V_{LL}, AV_{DD1}, DV_{DD1} and DV_{DD2}	Logic supply, positive gate drive supply and bias

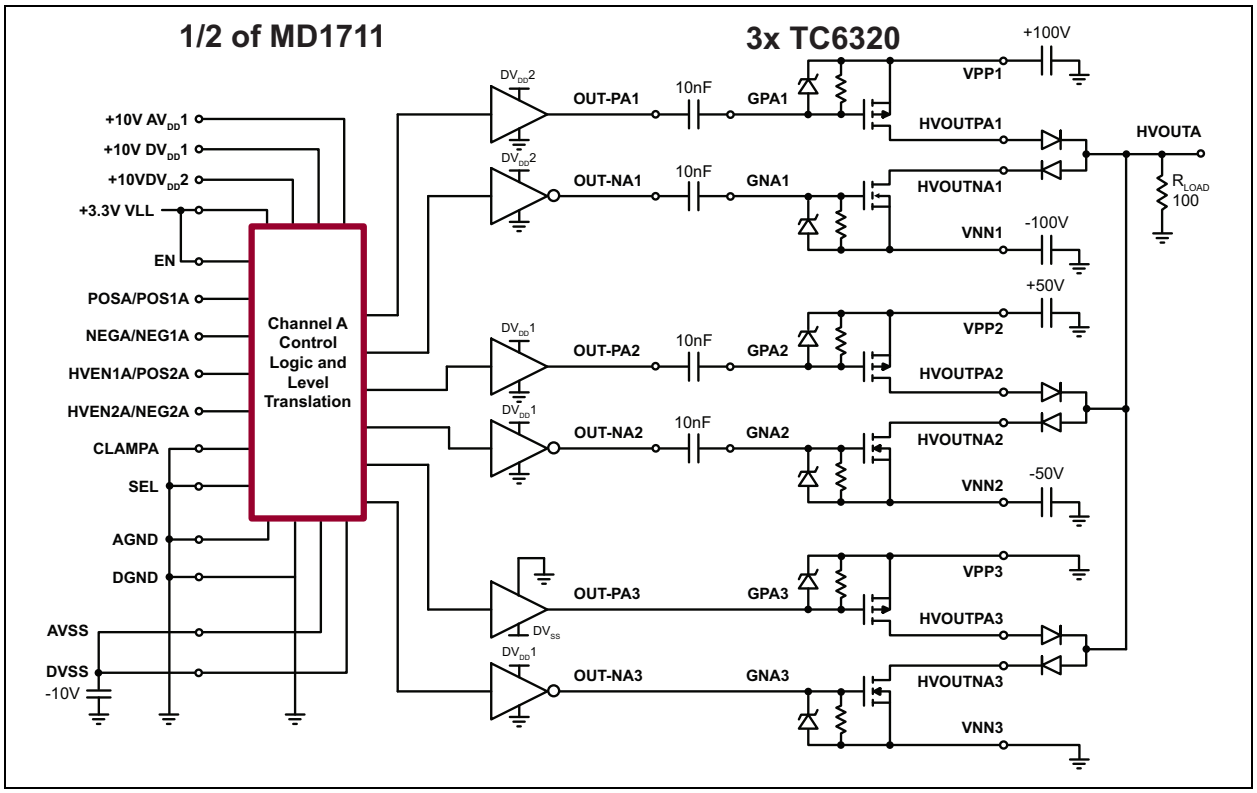

FIGURE 3-1: *Test Circuit for Channel A.*

© 2019 Microchip Technology Inc.

TABLE 3-2: TRUTH FUNCTION TABLE FOR CHANNELS A AND B (FOR SEL = L)

Logic Control Inputs							$V_{PP}1$ to $V_{NN}1$ Output		$V_{PP}2$ to $V_{NN}2$ Output		$V_{PP}3$ to $V_{NN}3$ Output	
SEL	EN	HVEN1/ POS2	HVEN2/ NEG2	Clamp	POS/ POS1	NEG/ NEG1	$HV_{OUT}P1$	$HV_{OUT}N1$	$HV_{OUT}P2$	$HV_{OUT}N2$	$HV_{OUT}P3$	$HV_{OUT}N3$
0	1	0	0	0	0	0	OFF		OFF		ON	ON
0	1	0	0	0	0	1					ON	ON
0	1	0	0	0	1	0					ON	ON
0	1	0	0	0	1	1					OFF	OFF
0	1	0	0	1	0	0	OFF		OFF		OFF	
0	1	0	0	1	0	1						
0	1	0	0	1	1	0						
0	1	0	0	1	1	1						
0	1	0	1	0	0	0	OFF		OFF	OFF	ON	ON
0	1	0	1	0	0	1			OFF	ON	OFF	OFF
0	1	0	1	0	1	0			ON	OFF	OFF	OFF
0	1	0	1	0	1	1			OFF	OFF	OFF	OFF
0	1	0	1	1	0	0	OFF		OFF		OFF	
0	1	0	1	1	0	1						
0	1	0	1	1	1	0						
0	1	0	1	1	1	1						
0	1	1	0	0	0	0	OFF	OFF	OFF		ON	ON
0	1	1	0	0	0	1	OFF	ON			OFF	OFF
0	1	1	0	0	1	0	ON	OFF			OFF	OFF
0	1	1	0	0	1	1	OFF	OFF			OFF	OFF
0	1	1	0	1	0	0	OFF		OFF		OFF	
0	1	1	0	1	0	1						
0	1	1	0	1	1	0						
0	1	1	0	1	1	1						
0	1	1	1	0	0	0	OFF		OFF		OFF	
0	1	1	1	0	0	1						
0	1	1	1	0	1	0						
0	1	1	1	0	1	1						
0	1	1	1	1	0	0	OFF		OFF		OFF	
0	1	1	1	1	0	1						
0	1	1	1	1	1	0						
0	1	1	1	1	1	1						
0	0	X	X	X	X	X	OFF		OFF		OFF	

TABLE 3-3: TRUTH FUNCTION TABLE FOR CHANNELS A AND B (FOR SEL = H)

Logic Control Inputs							$V_{PP}1$ to $V_{NN}1$ Output		$V_{PP}2$ to $V_{NN}2$ Output		$V_{PP}3$ to $V_{NN}3$ Output	
SEL	EN	HVEN1/ POS2	HVEN2/ NEG2	Clamp	POS/ POS1	NEG/ NEG1	$HV_{OUT}P1$	$HV_{OUT}N1$	$HV_{OUT}P2$	$HV_{OUT}N2$	$HV_{OUT}P3$	$HV_{OUT}N3$
1	1	0	0	0	0	0	OFF	OFF	OFF	OFF	OFF	
1	1	0	0	0	0	1	OFF	ON				
1	1	0	0	0	1	0	ON	OFF				
1	1	0	0	0	1	1	ON	ON				
1	1	0	0	1	0	0	OFF	OFF	OFF	ON	OFF	
1	1	0	0	1	0	1	OFF	ON				
1	1	0	0	1	1	0	ON	OFF				
1	1	0	0	1	1	1	ON	ON				
1	1	0	1	0	0	0	OFF	OFF	ON	OFF	OFF	
1	1	0	1	0	0	1	OFF	ON				
1	1	0	1	0	1	0	ON	OFF				
1	1	0	1	0	1	1	ON	ON				
1	1	0	1	1	0	0	OFF	OFF	ON	ON	OFF	
1	1	0	1	1	0	1	OFF	ON				
1	1	0	1	1	1	0	ON	OFF				
1	1	0	1	1	1	1	ON	ON				
1	1	1	0	0	0	0	OFF	OFF	OFF	OFF	ON	
1	1	1	0	0	0	1	OFF	ON				
1	1	1	0	0	1	0	ON	OFF				
1	1	1	0	0	1	1	ON	ON				
1	1	1	0	1	0	0	OFF	OFF	OFF	ON	ON	
1	1	1	0	1	0	1	OFF	ON				
1	1	1	0	1	1	0	ON	OFF				
1	1	1	0	1	1	1	ON	ON				
1	1	1	1	0	0	0	OFF	OFF	ON	OFF	ON	
1	1	1	1	0	0	1	OFF	ON				
1	1	1	1	0	1	0	ON	OFF				
1	1	1	1	0	1	1	ON	ON				
1	1	1	1	1	0	0	OFF	OFF	ON	ON	ON	
1	1	1	1	1	0	1	OFF	ON				
1	1	1	1	1	1	0	ON	OFF				
1	1	1	1	1	1	1	ON	ON				
1	0	X	X	X	X	X	OFF	OFF	OFF	OFF	OFF	

© 2019 Microchip Technology Inc.

4.0 PACKAGING INFORMATION

4.1 Package Marking Information

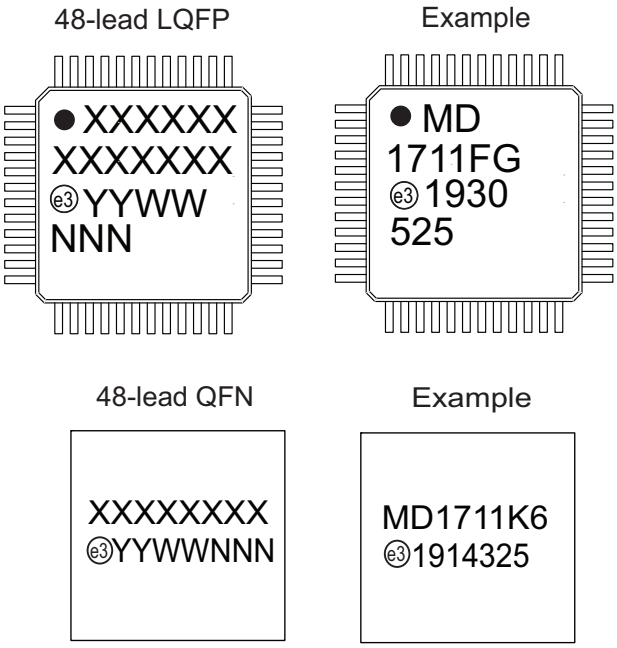

Legend:	XX...X	Product Code or Customer-specific information
	Y	Year code (last digit of calendar year)
	YY	Year code (last 2 digits of calendar year)
	WW	Week code (week of January 1 is week ‘01’)
	NNN	Alphanumeric traceability code
	e3	Pb-free JEDEC® designator for Matte Tin (Sn)
	*	This package is Pb-free. The Pb-free JEDEC designator (e3) can be found on the outer packaging for this package.
Note:	In the event the full Microchip part number cannot be marked on one line, it will be carried over to the next line, thus limiting the number of available characters for product code or customer-specific information. Package may or not include the corporate logo.	

48-Lead LQFP Package Outline (FG)

7.00x7.00mm body, 1.60mm height (max), 0.50mm pitch

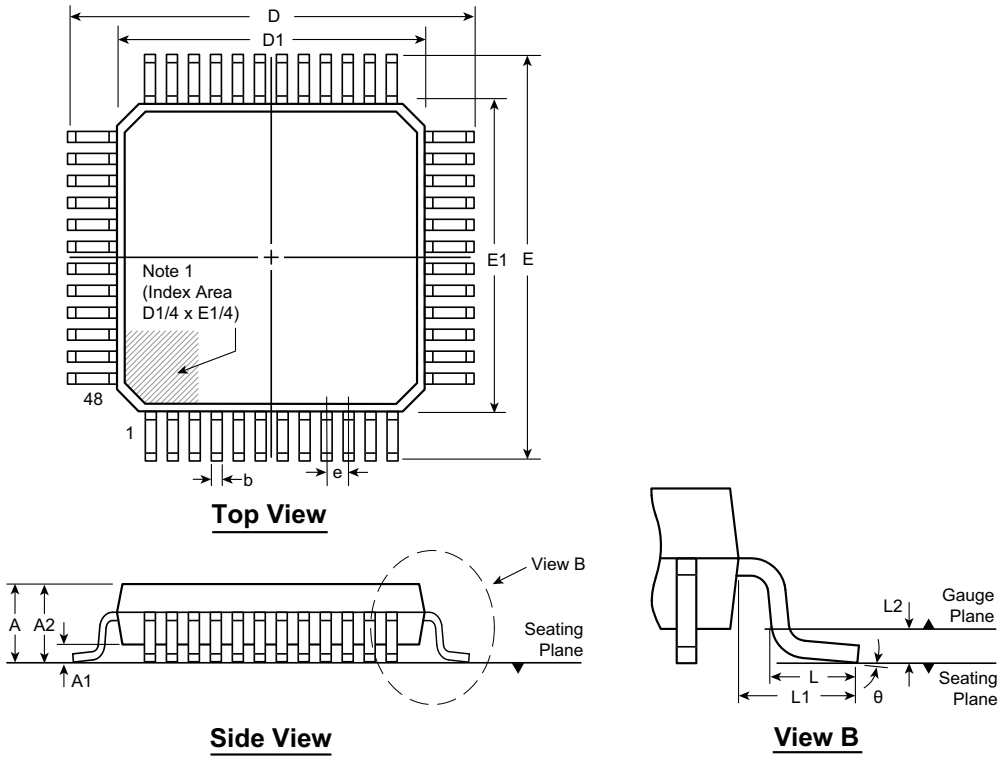

Note: For the most current package drawings, see the Microchip Packaging Specification at www.microchip.com/packaging.

Note:

1. *A Pin 1 identifier must be located in the index area indicated. The Pin 1 identifier can be: a molded mark/identifier; an embedded metal marker; or a printed indicator.*

Symbol		A	A1	A2	b	D	D1	E	E1	e	L	L1	L2	θ
Dimension (mm)	MIN	1.40*	0.05	1.35	0.17	8.80*	6.80*	8.80*	6.80*	0.50 BSC	0.45	1.00 REF	0.25 BSC	0°
	NOM	-	-	1.40	0.22	9.00	7.00	9.00	7.00		0.60			3.5°
	MAX	1.60	0.15	1.45	0.27	9.20*	7.20*	9.20*	7.20*		0.75			7°

JEDEC Registration MS-026, Variation BBC, Issue D, Jan. 2001.
** This dimension is not specified in the JEDEC drawing.*

Drawings are not to scale.

© 2019 Microchip Technology Inc.

48-Lead QFN Package Outline (K6)

7.00x7.00mm body, 1.00mm height (max), 0.50mm pitch

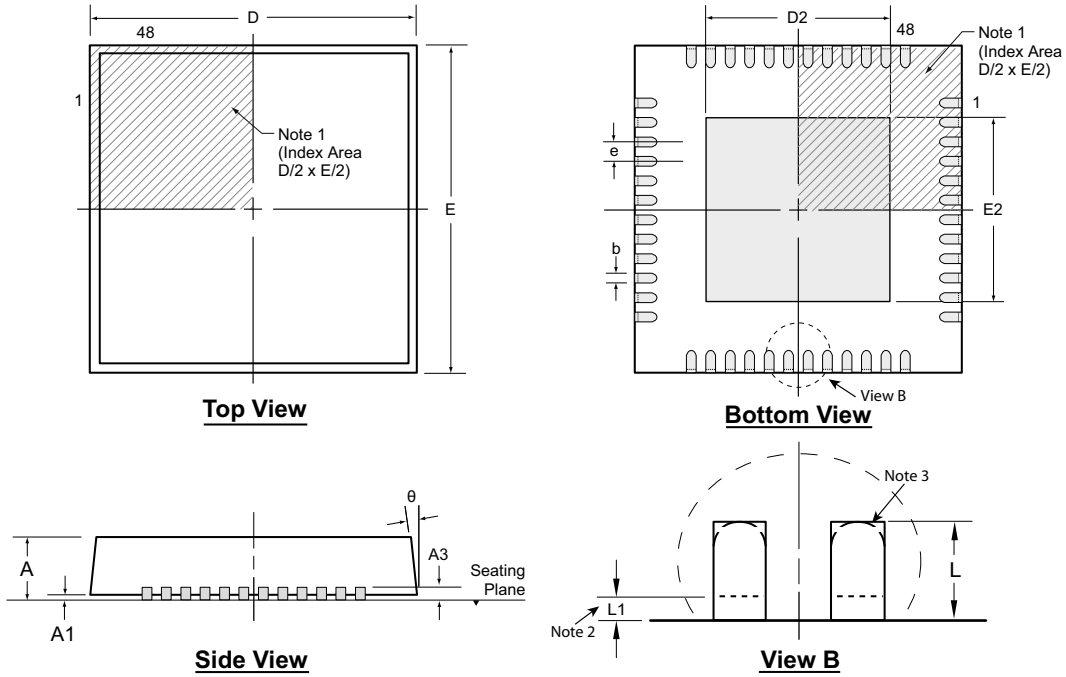

Note: For the most current package drawings, see the Microchip Packaging Specification at www.microchip.com/packaging.

Notes:

1. *A Pin 1 identifier must be located in the index area indicated. The Pin 1 identifier can be: a molded mark/identifier; an embedded metal marker; or a printed indicator.*
2. *Depending on the method of manufacturing, a maximum of 0.15mm pullback (L1) may be present.*
3. *The inner tip of the lead may be either rounded or square.*

Symbol		A	A1	A3	b	D	D2	E	E2	e	L	L1	θ
Dimension (mm)	MIN	0.80	0.00	0.20 REF	0.18	6.85*	1.25	6.85*	1.25	0.50 BSC	0.30†	0.00	0°
	NOM	0.90	0.02		0.25	7.00	-	7.00	-		0.40†	-	-
	MAX	1.00	0.05		0.30	7.15*	5.45	7.15*	5.45		0.50†	0.15	14°

JEDEC Registration MO-220, Variation VKKD-6, Issue K, June 2006.
** This dimension is not specified in the JEDEC drawing.*
† This dimension differs from the JEDEC drawing.
Drawings are not to scale.

NOTES:

© 2019 Microchip Technology Inc.

APPENDIX A: REVISION HISTORY

Revision A (April 2019)

- Converted Supertex Doc# DSFP-MD1711 to Microchip DS20005740A
- Changed package marking formats
- Changed the quantity of the 48-lead LQFP FG M931 media type from 3000/Reel to 1000/Reel
- Changed the quantity of the 48-lead VQFN K6 package from 250/Tray to 260/Tray
- Changed the quantity of the 48-lead VQFN K6 M933 media type from 2000/Reel to 3000/Reel
- Made minor text changes throughout the document

PRODUCT IDENTIFICATION SYSTEM

To order or obtain information, e.g., on pricing or delivery, contact your local Microchip representative or sales office.

PART NO.	XX	-	X	-	X
Device	Package Options		Environmental		Media Type

Device:	MD1711	=	High-Speed Integrated Ultrasound Driver IC
Packages:	FG	=	48-lead LQFP
	K6	=	48-lead VQFN
Environmental:	G	=	Lead (Pb)-free/RoHS-compliant Package
Media Types:	(blank)	=	250/Tray for an FG Package
		=	260/Tray for a K6 Package
	M931	=	1000/Reel for an FG Package
	M933	=	3000/Reel for a K6 Package

Examples:

a) MD1711FG-G:	High-Speed Integrated Ultrasound Driver IC, 48-lead LQFP, 250/Tray
b) MD1711FG-G-M931:	High-Speed Integrated Ultrasound Driver IC, 48-lead LQFP, 1000/Reel
c) MD1711K6-G:	High-Speed Integrated Ultrasound Driver IC, 48-lead VQFN, 260/Tray
d) MD1711K6-G-M933:	High-Speed Integrated Ultrasound Driver IC, 48-lead VQFN, 3000/Reel

© 2019 Microchip Technology Inc.

Note the following details of the code protection feature on Microchip devices:

- Microchip products meet the specification contained in their particular Microchip Data Sheet.
- Microchip believes that its family of products is one of the most secure families of its kind on the market today, when used in the intended manner and under normal conditions.
- There are dishonest and possibly illegal methods used to breach the code protection feature. All of these methods, to our knowledge, require using the Microchip products in a manner outside the operating specifications contained in Microchip's Data Sheets. Most likely, the person doing so is engaged in theft of intellectual property.
- Microchip is willing to work with the customer who is concerned about the integrity of their code.
- Neither Microchip nor any other semiconductor manufacturer can guarantee the security of their code. Code protection does not mean that we are guaranteeing the product as "unbreakable."

Code protection is constantly evolving. We at Microchip are committed to continuously improving the code protection features of our products. Attempts to break Microchip's code protection feature may be a violation of the Digital Millennium Copyright Act. If such acts allow unauthorized access to your software or other copyrighted work, you may have a right to sue for relief under that Act.

Information contained in this publication regarding device applications and the like is provided only for your convenience and may be superseded by updates. It is your responsibility to ensure that your application meets with your specifications. MICROCHIP MAKES NO REPRESENTATIONS OR WARRANTIES OF ANY KIND WHETHER EXPRESS OR IMPLIED, WRITTEN OR ORAL, STATUTORY OR OTHERWISE, RELATED TO THE INFORMATION, INCLUDING BUT NOT LIMITED TO ITS CONDITION, QUALITY, PERFORMANCE, MERCHANTABILITY OR FITNESS FOR PURPOSE. Microchip disclaims all liability arising from this information and its use. Use of Microchip devices in life support and/or safety applications is entirely at the buyer's risk, and the buyer agrees to defend, indemnify and hold harmless Microchip from any and all damages, claims, suits, or expenses resulting from such use. No licenses are conveyed, implicitly or otherwise, under any Microchip intellectual property rights unless otherwise stated.

Microchip received ISO/TS-16949:2009 certification for its worldwide headquarters, design and wafer fabrication facilities in Chandler and Tempe, Arizona; Gresham, Oregon and design centers in California and India. The Company's quality system processes and procedures are for its PIC® MCUs and dsPIC® DSCs, KEELOQ® code hopping devices, Serial EEPROMs, microperipherals, nonvolatile memory and analog products. In addition, Microchip's quality system for the design and manufacture of development systems is ISO 9001:2000 certified.

QUALITY MANAGEMENT SYSTEM
CERTIFIED BY DNV
═ ISO/TS 16949 ═

Trademarks

The Microchip name and logo, the Microchip logo, AnyRate, AVR, AVR logo, AVR Freaks, BitCloud, chipKIT, chipKIT logo, CryptoMemory, CryptoRF, dsPIC, FlashFlex, flexPWR, Heldo, JukeBlox, KeeLoq, Kleer, LANCheck, LINK MD, maXStylus, maXTouch, MediaLB, megaAVR, MOST, MOST logo, MPLAB, OptoLyzer, PIC, picoPower, PICSTART, PIC32 logo, Prochip Designer, QTouch, SAM-BA, SpyNIC, SST, SST Logo, SuperFlash, tinyAVR, UNI/O, and XMEGA are registered trademarks of Microchip Technology Incorporated in the U.S.A. and other countries.

ClockWorks, The Embedded Control Solutions Company, EtherSynch, Hyper Speed Control, HyperLight Load, IntelliMOS, mTouch, Precision Edge, and Quiet-Wire are registered trademarks of Microchip Technology Incorporated in the U.S.A.

Adjacent Key Suppression, AKS, Analog-for-the-Digital Age, Any Capacitor, AnyIn, AnyOut, BodyCom, CodeGuard, CryptoAuthentication, CryptoAutomotive, CryptoCompanion, CryptoController, dsPICDEM, dsPICDEM.net, Dynamic Average Matching, DAM, ECAN, EtherGREEN, In-Circuit Serial Programming, ICSP, INICnet, Inter-Chip Connectivity, JitterBlocker, KleerNet, KleerNet logo, memBrain, Mindi, MiWi, motorBench, MPASM, MPF, MPLAB Certified logo, MPLIB, MPLINK, MultiTRAK, NetDetach, Omniscient Code Generation, PICDEM, PICDEM.net, PICkit, PICtail, PowerSmart, PureSilicon, QMatrix, REAL ICE, Ripple Blocker, SAM-ICE, Serial Quad I/O, SMART-I.S., SQI, SuperSwitcher, SuperSwitcher II, Total Endurance, TSHARC, USBCheck, VariSense, ViewSpan, WiperLock, Wireless DNA, and ZENA are trademarks of Microchip Technology Incorporated in the U.S.A. and other countries.

SQTP is a service mark of Microchip Technology Incorporated in the U.S.A.

Silicon Storage Technology is a registered trademark of Microchip Technology Inc. in other countries.

GestIC is a registered trademark of Microchip Technology Germany II GmbH & Co. KG, a subsidiary of Microchip Technology Inc., in other countries.

All other trademarks mentioned herein are property of their respective companies.

© 2019, Microchip Technology Incorporated, All Rights Reserved.

ISBN: 978-1-5224-4413-8

Worldwide Sales and Service

AMERICAS

Corporate Office
2355 West Chandler Blvd.
Chandler, AZ 85224-6199
Tel: 480-792-7200
Fax: 480-792-7277
Technical Support:
http://www.microchip.com/support
Web Address:
www.microchip.com

Atlanta
Duluth, GA
Tel: 678-957-9614
Fax: 678-957-1455

Austin, TX
Tel: 512-257-3370

Boston
Westborough, MA
Tel: 774-760-0087
Fax: 774-760-0088

Chicago
Itasca, IL
Tel: 630-285-0071
Fax: 630-285-0075

Dallas
Addison, TX
Tel: 972-818-7423
Fax: 972-818-2924

Detroit
Novi, MI
Tel: 248-848-4000

Houston, TX
Tel: 281-894-5983

Indianapolis
Noblesville, IN
Tel: 317-773-8323
Fax: 317-773-5453
Tel: 317-536-2380

Los Angeles
Mission Viejo, CA
Tel: 949-462-9523
Fax: 949-462-9608
Tel: 951-273-7800

Raleigh, NC
Tel: 919-844-7510

New York, NY
Tel: 631-435-6000

San Jose, CA
Tel: 408-735-9110
Tel: 408-436-4270

Canada - Toronto
Tel: 905-695-1980
Fax: 905-695-2078

ASIA/PACIFIC

Australia - Sydney
Tel: 61-2-9868-6733

China - Beijing
Tel: 86-10-8569-7000

China - Chengdu
Tel: 86-28-8665-5511

China - Chongqing
Tel: 86-23-8980-9588

China - Dongguan
Tel: 86-769-8702-9880

China - Guangzhou
Tel: 86-20-8755-8029

China - Hangzhou
Tel: 86-571-8792-8115

China - Hong Kong SAR
Tel: 852-2943-5100

China - Nanjing
Tel: 86-25-8473-2460

China - Qingdao
Tel: 86-532-8502-7355

China - Shanghai
Tel: 86-21-3326-8000

China - Shenyang
Tel: 86-24-2334-2829

China - Shenzhen
Tel: 86-755-8864-2200

China - Suzhou
Tel: 86-186-6233-1526

China - Wuhan
Tel: 86-27-5980-5300

China - Xian
Tel: 86-29-8833-7252

China - Xiamen
Tel: 86-592-2388138

China - Zhuhai
Tel: 86-756-3210040

ASIA/PACIFIC

India - Bangalore
Tel: 91-80-3090-4444

India - New Delhi
Tel: 91-11-4160-8631

India - Pune
Tel: 91-20-4121-0141

Japan - Osaka
Tel: 81-6-6152-7160

Japan - Tokyo
Tel: 81-3-6880- 3770

Korea - Daegu
Tel: 82-53-744-4301

Korea - Seoul
Tel: 82-2-554-7200

Malaysia - Kuala Lumpur
Tel: 60-3-7651-7906

Malaysia - Penang
Tel: 60-4-227-8870

Philippines - Manila
Tel: 63-2-634-9065

Singapore
Tel: 65-6334-8870

Taiwan - Hsin Chu
Tel: 886-3-577-8366

Taiwan - Kaohsiung
Tel: 886-7-213-7830

Taiwan - Taipei
Tel: 886-2-2508-8600

Thailand - Bangkok
Tel: 66-2-694-1351

Vietnam - Ho Chi Minh
Tel: 84-28-5448-2100

EUROPE

Austria - Wels
Tel: 43-7242-2244-39
Fax: 43-7242-2244-393

Denmark - Copenhagen
Tel: 45-4450-2828
Fax: 45-4485-2829

Finland - Espoo
Tel: 358-9-4520-820

France - Paris
Tel: 33-1-69-53-63-20
Fax: 33-1-69-30-90-79

Germany - Garching
Tel: 49-8931-9700

Germany - Haan
Tel: 49-2129-3766400

Germany - Heilbronn
Tel: 49-7131-67-3636

Germany - Karlsruhe
Tel: 49-721-625370

Germany - Munich
Tel: 49-89-627-144-0
Fax: 49-89-627-144-44

Germany - Rosenheim
Tel: 49-8031-354-560

Israel - Ra'anana
Tel: 972-9-744-7705

Italy - Milan
Tel: 39-0331-742611
Fax: 39-0331-466781

Italy - Padova
Tel: 39-049-7625286

Netherlands - Drunen
Tel: 31-416-690399
Fax: 31-416-690340

Norway - Trondheim
Tel: 47-7288-4388

Poland - Warsaw
Tel: 48-22-3325737

Romania - Bucharest
Tel: 40-21-407-87-50

Spain - Madrid
Tel: 34-91-708-08-90
Fax: 34-91-708-08-91

Sweden - Gothenberg
Tel: 46-31-704-60-40

Sweden - Stockholm
Tel: 46-8-5090-4654

UK - Wokingham
Tel: 44-118-921-5800
Fax: 44-118-921-5820

© 2019 Microchip Technology Inc.

Looking for pricing, stock, or lifecycle information?

Click below to explore more details on WIN SOURCE:

- View MD1711K6-G on WIN SOURCE
- Microchip Technology Information

Optimize Your Supply Chain with WIN SOURCE Solutions

- Global Sourcing Solution
- Obsolete Management
- Cost Control Management
- Shortage Management
- Alternative Solution
- Excess Inventory Management