THE DATASHEET OF

ADR423BRZ

www.win-source.net 0086-755-83957316

Ultraprecision, Low Noise, 2.048 V/2.500 V/ 3.00 V/5.00 V XFET® Voltage References

Data Sheet

ADR420/ADR421/ADR423/ADR425

FEATURES

Low noise (0.1 Hz to 10 Hz)
- **ADR420: 1.75 µV p-p**
- **ADR421: 1.75 µV p-p**
- **ADR423: 2.0 µV p-p**
- **ADR425: 3.4 µV p-p**

Low temperature coefficient: 3 ppm/°C
Long-term stability: 50 ppm/1000 hours
Load regulation: 70 ppm/mA
Line regulation: 35 ppm/V
Low hysteresis: 40 ppm typical
Wide operating range
- **ADR420: 4 V to 18 V**
- **ADR421: 4.5 V to 18 V**
- **ADR423: 5 V to 18 V**
- **ADR425: 7 V to 18 V**

Quiescent current: 0.5 mA maximum
High output current: 10 mA
Wide temperature range: −40°C to +125°C

APPLICATIONS

Precision data acquisition systems
High resolution converters
Battery-powered instrumentation
Portable medical instruments
Industrial process control systems
Precision instruments
Optical network control circuits

PIN CONFIGURATION

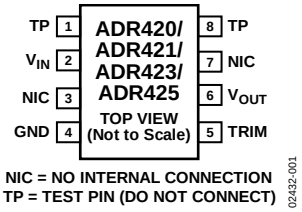

Figure 1. 8-Lead SOIC, 8-Lead MSOP

GENERAL DESCRIPTION

The ADR42x are a series of ultraprecision, second generation eXtra implanted junction FET (XFET) voltage references featuring low noise, high accuracy, and excellent long-term stability in SOIC and MSOP footprints.

Patented temperature drift curvature correction technique and XFET technology minimize nonlinearity of the voltage change with temperature. The XFET architecture offers superior accuracy and thermal hysteresis to the band gap references. It also operates at lower power and lower supply headroom than the buried Zener references.

The superb noise and the stable and accurate characteristics of the ADR42x make them ideal for precision conversion applications such as optical networks and medical equipment. The ADR42x trim terminal can also be used to adjust the output voltage over a ±0.5% range without compromising any other performance. The ADR42x series voltage references offer two electrical grades and are specified over the extended industrial temperature range of −40°C to +125°C. Devices have 8-lead SOIC or 30% smaller, 8-lead MSOP packages.

ADR42x PRODUCTS

Table 1.

Model	Output Voltage, V_{OUT} (V)	Initial Accuracy		Temperature Coefficient (ppm/°C)
		mV	%	
ADR420	2.048	1, 3	0.05, 0.15	3, 10
ADR421	2.50	1, 3	0.04, 0.12	3, 10
ADR423	3.00	1.5, 4	0.04, 0.13	3, 10
ADR425	5.00	2, 6	0.04, 0.12	3, 10

Rev. J
Document Feedback
Information furnished by Analog Devices is believed to be accurate and reliable. However, no responsibility is assumed by Analog Devices for its use, nor for any infringements of patents or other rights of third parties that may result from its use. Specifications subject to change without notice. No license is granted by implication or otherwise under any patent or patent rights of Analog Devices. Trademarks and registered trademarks are the property of their respective owners.

One Technology Way, P.O. Box 9106, Norwood, MA 02062-9106, U.S.A.
Tel: 781.329.4700 ©2001–2013 Analog Devices, Inc. All rights reserved.
Technical Support
www.analog.com

TABLE OF CONTENTS

Features ... 1
Applications ... 1
Pin Configuration ... 1
General Description ... 1
ADR42x Products ... 1
Revision History ... 3
Specifications ... 4
ADR420 Electrical Specifications ... 4
ADR421 Electrical Specifications ... 5
ADR423 Electrical Specifications ... 6
ADR425 Electrical Specifications ... 7
Absolute Maximum Ratings ... 8
Thermal Resistance ... 8
ESD Caution ... 8
Pin Configurations and Function Descriptions ... 9
Typical Performance Characteristics ... 10
Terminology ... 16
Theory of Operation ... 17
Device Power Dissipation Considerations ... 17
Basic Voltage Reference Connections ... 17
Noise Performance ... 17
Turn-On Time ... 17
Applications ... 18
Output Adjustment ... 18
Reference for Converters in Optical Network Control Circuits ... 18
High Voltage Floating Current Source ... 18
Kelvin Connections ... 19
Dual-Polarity References ... 19
Programmable Current Source ... 20
Programmable DAC Reference Voltage ... 20
Precision Voltage Reference for Data Converters ... 21
Precision Boosted Output Regulator ... 21
Outline Dimensions ... 22
Ordering Guide ... 23

REVISION HISTORY

12/13—Rev. I to Rev. J

Added θ_{JC} Values to Table 7 8
Changes to Ordering Guide 23

5/11—Rev. H to Rev. I

Added Endnote 1 in Table 2 4
Added Endnote 1 in Table 3 5
Added Endnote 1 in Table 4 6
Added Endnote 1 in Table 5 7
Deleted A Negative Precision Reference Without Precision Resistors Section 17
Deleted Figure 42; Renumbered Sequentially 17
Updated Outline Dimensions 21
Changes to Ordering Guide 22

6/07—Rev. G to Rev. H

Changes to Table 2 3
Changes to Table 3 4
Changes to Table 4 5
Changes to Table 5 6
Updated Outline Dimensions 21
Changes to Ordering Guide 22

6/05—Rev. F to Rev. G

Changes to Table 1 1
Changes to Ordering Guide 22

2/05—Rev. E to Rev. F

Updated Format ..... Universal
Updated Outline Dimensions 21
Changes to Ordering Guide 22

7/04—Rev. D to Rev. E

Changes to Ordering Guide 5

3/04—Rev. C to Rev. D

Changes to Table I 1
Changes to Ordering Guide 4
Updated Outline Dimensions 16

1/03—Rev. B to Rev. C

Changed Mini_SOIC to MSOP ..... Universal
Changes to Ordering Guide 4
Corrections to Y-axis labels in TPCs 21 and 24 9
Enhancement to Figure 13 15
Updated Outline Dimensions 16

3/02—Rev. A to Rev. B

Edits to Ordering Guide 4
Deletion of Precision Voltage Regulator section 15
Addition of Precision Boosted Output Regulator section 15
Addition of Figure 13 15

10/01—Rev. 0 to Rev. A

Addition of ADR423 and ADR425 to ADR420/ADR421 ..... Universal

5/01—Revision 0: Initial Version

SPECIFICATIONS

ADR420 ELECTRICAL SPECIFICATIONS

V_{IN} = 5.0 V to 15.0 V, T_A = 25°C, unless otherwise noted.

Table 2.

Parameter	Symbol	Conditions	Min	Typ	Max	Unit
OUTPUT VOLTAGE	V_{OUT}					
A Grade			2.045	2.048	2.051	V
B Grade			2.047	2.048	2.049	V
INITIAL ACCURACY[1]	V_{OUTERR}					
A Grade			−3		+3	mV
			−0.15		+0.15	%
B Grade			−1		+1	mV
			−0.05		+0.05	%
TEMPERATURE COEFFICIENT	TCV_{OUT}	−40°C < T_A < +125°C				
A Grade				2	10	ppm°C
B Grade				1	3	ppm/°C
SUPPLY VOLTAGE HEADROOM	$V_{IN} - V_{OUT}$		2			V
LINE REGULATION	$\Delta V_{OUT}/\Delta V_{IN}$	V_{IN} = 5 V to 18 V, −40°C < T_A < +125°C		10	35	ppm/V
LOAD REGULATION	$\Delta V_{OUT}/\Delta I_L$	I_L = 0 mA to 10 mA, −40°C < T_A < +125°C			70	ppm/mA
QUIESCENT CURRENT	I_{IN}	No load		390	500	µA
		−40°C < T_A < +125°C			600	µA
VOLTAGE NOISE	e_N p-p	0.1 Hz to 10 Hz		1.75		µV p-p
VOLTAGE NOISE DENSITY	e_N	1 kHz		60		nV/√Hz
TURN-ON SETTLING TIME	t_R			10		µs
LONG-TERM STABILITY	ΔV_{OUT}	1000 hours		50		ppm
OUTPUT VOLTAGE HYSTERESIS	V_{OUT_HYS}			40		ppm
RIPPLE REJECTION RATIO	RRR	f_{IN} = 1 kHz		−75		dB
SHORT CIRCUIT TO GND	I_{SC}			27		mA

[1] Initial accuracy does not include shift due to solder heat effect.

ADR421 ELECTRICAL SPECIFICATIONS

V_{IN} = 5.0 V to 15.0 V, T_A = 25°C, unless otherwise noted.

Table 3.

Parameter	Symbol	Conditions	Min	Typ	Max	Unit
OUTPUT VOLTAGE	V_{OUT}					
A Grade			2.497	2.500	2.503	V
B Grade			2.499	2.500	2.501	V
INITIAL ACCURACY[1]	V_{OUTERR}					
A Grade			−3		+3	mV
			−0.12		+0.12	%
B Grade			−1		+1	mV
			−0.04		+0.04	%
TEMPERATURE COEFFICIENT	TCV_{OUT}	−40°C < T_A < +125°C				
A Grade				2	10	ppm/°C
B Grade				1	3	ppm/°C
SUPPLY VOLTAGE HEADROOM	$V_{IN} - V_{OUT}$		2			V
LINE REGULATION	$\Delta V_{OUT}/\Delta V_{IN}$	V_{IN} = 5 V to 18 V, −40°C < T_A < +125°C		10	35	ppm/V
LOAD REGULATION	$\Delta V_{OUT}/\Delta I_L$	I_L = 0 mA to 10 mA, −40°C < T_A < +125°C			70	ppm/mA
QUIESCENT CURRENT	I_{IN}	No load		390	500	µA
		−40°C < T_A < +125°C			600	µA
VOLTAGE NOISE	e_N p-p	0.1 Hz to 10 Hz		1.75		µV p-p
VOLTAGE NOISE DENSITY	e_N	1 kHz		80		nV/√Hz
TURN-ON SETTLING TIME	t_R			10		µs
LONG-TERM STABILITY	ΔV_{OUT}	1000 hours		50		ppm
OUTPUT VOLTAGE HYSTERESIS	V_{OUT_HYS}			40		ppm
RIPPLE REJECTION RATIO	RRR	f_{IN} = 1 kHz		−75		dB
SHORT CIRCUIT TO GND	I_{SC}			27		mA

[1] Initial accuracy does not include shift due to solder heat effect.

ADR423 ELECTRICAL SPECIFICATIONS

V_{IN} = 5.0 V to 15.0 V, T_A = 25°C, unless otherwise noted.

Table 4.

Parameter	Symbol	Conditions	Min	Typ	Max	Unit
OUTPUT VOLTAGE	V_{OUT}					
A Grade			2.996	3.000	3.004	V
B Grade			2.9985	3.000	3.0015	V
INITIAL ACCURACY[1]	V_{OUTERR}					
A Grade			−4		+4	mV
			−0.13		+0.13	%
B Grade			−1.5		+1.5	mV
			−0.04		+0.04	%
TEMPERATURE COEFFICIENT	TCV_{OUT}	−40°C < T_A < +125°C				
A Grade				2	10	ppm/°C
B Grade				1	3	ppm/°C
SUPPLY VOLTAGE HEADROOM	$V_{IN} - V_{OUT}$		2			V
LINE REGULATION	$\Delta V_{OUT}/\Delta V_{IN}$	V_{IN} = 5 V to 18 V, −40°C < T_A < +125°C		10	35	ppm/V
LOAD REGULATION	$\Delta V_{OUT}/\Delta I_L$	I_L = 0 mA to 10 mA, −40°C < T_A < +125°C			70	ppm/mA
QUIESCENT CURRENT	I_{IN}	No load		390	500	µA
		−40°C < T_A < +125°C			600	µA
VOLTAGE NOISE	e_N p-p	0.1 Hz to 10 Hz		2		µV p-p
VOLTAGE NOISE DENSITY	e_N	1 kHz		90		nV/√Hz
TURN-ON SETTLING TIME	t_R			10		µs
LONG-TERM STABILITY	ΔV_{OUT}	1000 hours		50		ppm
OUTPUT VOLTAGE HYSTERESIS	V_{OUT_HYS}			40		ppm
RIPPLE REJECTION RATIO	RRR	f_{IN} = 1 kHz		−75		dB
SHORT CIRCUIT TO GND	I_{SC}			27		mA

[1] Initial accuracy does not include shift due to solder heat effect.

ADR425 ELECTRICAL SPECIFICATIONS

V_{IN} = 7.0 V to 15.0 V, T_A = 25°C, unless otherwise noted.

Table 5.

Parameter	Symbol	Conditions	Min	Typ	Max	Unit
OUTPUT VOLTAGE	V_{OUT}					
A Grade			4.994	5.000	5.006	V
B Grade			4.998	5.000	5.002	V
INITIAL ACCURACY[1]	V_{OUTERR}					
A Grade			−6		+6	mV
			−0.12		+0.12	%
B Grade			−2		+2	mV
			−0.04		+0.04	%
TEMPERATURE COEFFICIENT	TCV_{OUT}					
A Grade		−40°C < T_A < +125°C		2	10	ppm/°C
B Grade				1	3	ppm/°C
SUPPLY VOLTAGE HEADROOM	$V_{IN} - V_O$		2			V
LINE REGULATION	$\Delta V_O/\Delta V_{IN}$	V_{IN} = 7 V to 18 V, −40°C < T_A < +125°C		10	35	ppm/V
LOAD REGULATION	$\Delta V_O/\Delta I_L$	I_L = 0 mA to 10 mA, −40°C < T_A < +125°C			70	ppm/mA
QUIESCENT CURRENT	I_{IN}	No load		390	500	µA
		−40°C < T_A < +125°C			600	µA
VOLTAGE NOISE	e_N p-p	0.1 Hz to 10 Hz		3.4		µV p-p
VOLTAGE NOISE DENSITY	e_N	1 kHz		110		nV/√Hz
TURN-ON SETTLING TIME	t_R			10		µs
LONG-TERM STABILITY	ΔV_O	1000 hours		50		ppm
OUTPUT VOLTAGE HYSTERESIS	V_{O_HYS}			40		ppm
RIPPLE REJECTION RATIO	RRR	f_{IN} = 1 kHz		−75		dB
SHORT CIRCUIT TO GND	I_{SC}			27		mA

[1] Initial accuracy does not include shift due to solder heat effect.

ABSOLUTE MAXIMUM RATINGS

These ratings apply at 25°C, unless otherwise noted.

Table 6.

Parameter	Rating
Supply Voltage	18 V
Output Short-Circuit Duration to GND	Indefinite
Storage Temperature Range	−65°C to +150°C
Operating Temperature Range	−40°C to +125°C
Junction Temperature Range	−65°C to +150°C
Lead Temperature (Soldering, 60 sec)	300°C

Stresses above those listed under Absolute Maximum Ratings may cause permanent damage to the device. This is a stress rating only; functional operation of the device at these or any other conditions above those indicated in the operational section of this specification is not implied. Exposure to absolute maximum rating conditions for extended periods may affect device reliability.

THERMAL RESISTANCE

θ_{JA} is specified for the worst-case conditions, that is, θ_{JA} is specified for devices soldered in the circuit board for surface-mount packages.

Table 7.

Package Type	θ_{JA}	θ_{JC}	Unit
8-Lead MSOP (RM)	190	44	°C/W
8-Lead SOIC (R)	130	43	°C/W

ESD CAUTION

ESD (electrostatic discharge) sensitive device. Charged devices and circuit boards can discharge without detection. Although this product features patented or proprietary protection circuitry, damage may occur on devices subjected to high energy ESD. Therefore, proper ESD precautions should be taken to avoid performance degradation or loss of functionality.

PIN CONFIGURATIONS AND FUNCTION DESCRIPTIONS

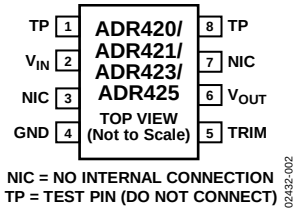

Figure 2. 8-Lead SOIC, 8-Lead MSOP Pin Configuration

Table 8. Pin Function Descriptions

Pin No.	Mnemonic	Description
1, 8	TP	Test Pin. There are actual connections in TP pins, but they are reserved for factory testing purposes. Users should not connect anything to TP pins; otherwise, the device may not function properly.
2	V_{IN}	Input Voltage.
3, 7	NIC	No Internal Connect. NICs have no internal connections.
4	GND	Ground Pin = 0 V.
5	TRIM	Trim Terminal. It can be used to adjust the output voltage over a ±0.5% range without affecting the temperature coefficient.
6	V_{OUT}	Output Voltage.

TYPICAL PERFORMANCE CHARACTERISTICS

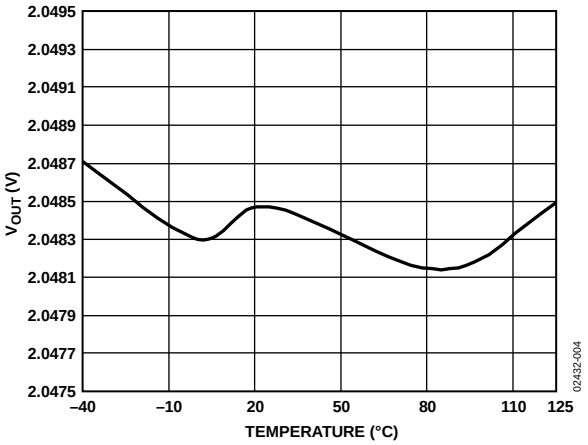

Figure 3. ADR420 Typical Output Voltage vs. Temperature

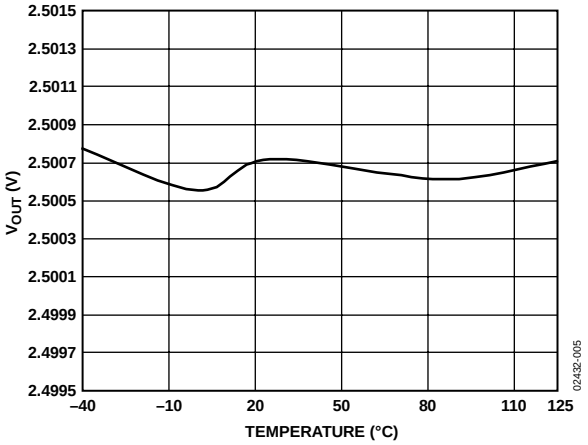

Figure 4. ADR421 Typical Output Voltage vs. Temperature

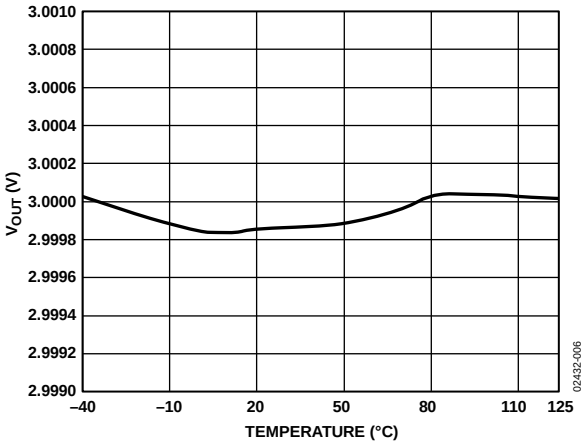

Figure 5. ADR423 Typical Output Voltage vs. Temperature

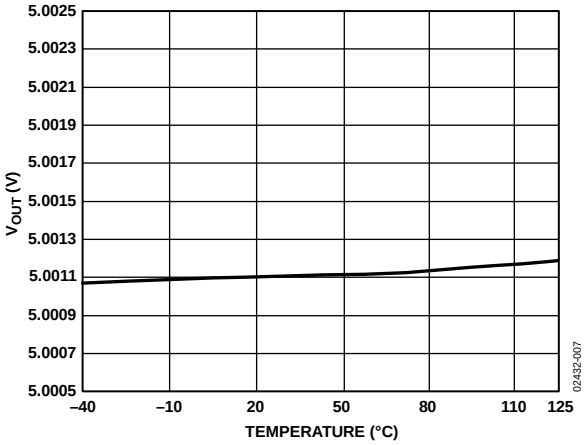

Figure 6. ADR425 Typical Output Voltage vs. Temperature

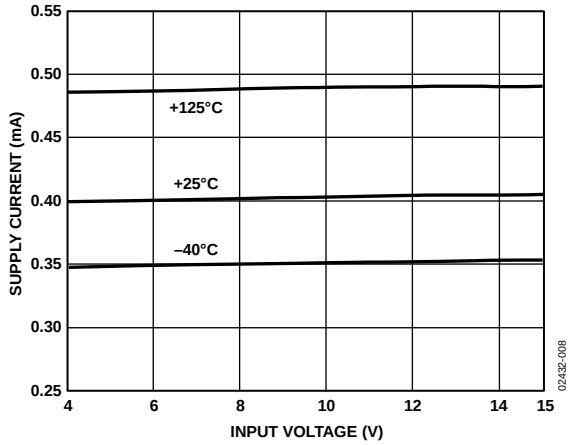

Figure 7. ADR420 Supply Current vs. Input Voltage

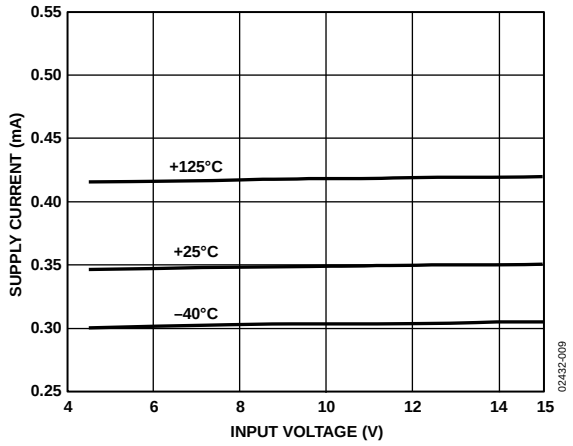

Figure 8. ADR421 Supply Current vs. Input Voltage

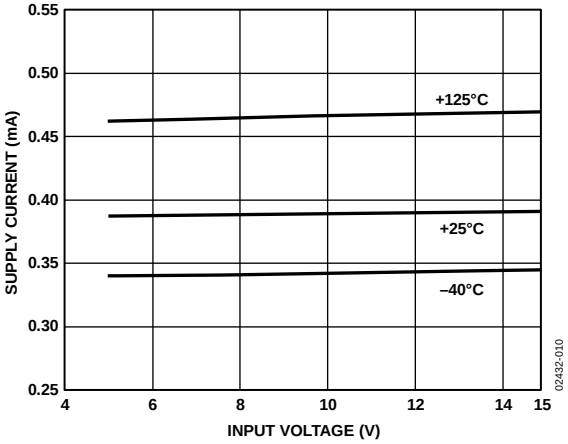

Figure 9. ADR423 Supply Current vs. Input Voltage

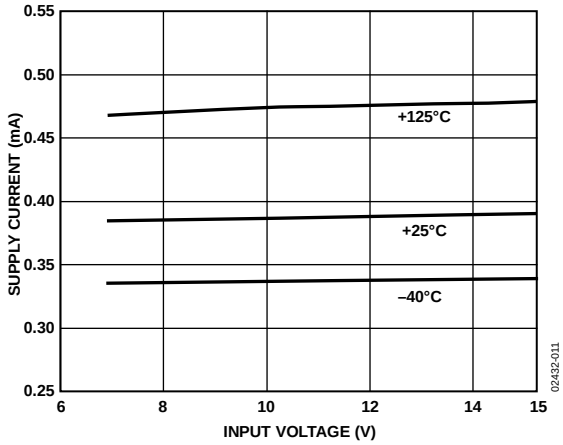

Figure 10. ADR425 Supply Current vs. Input Voltage

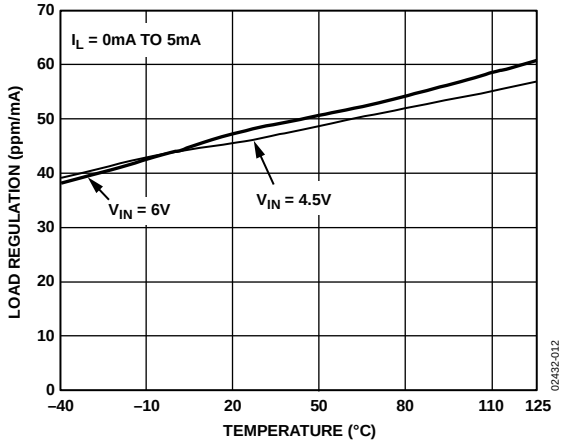

Figure 11. ADR420 Load Regulation vs. Temperature

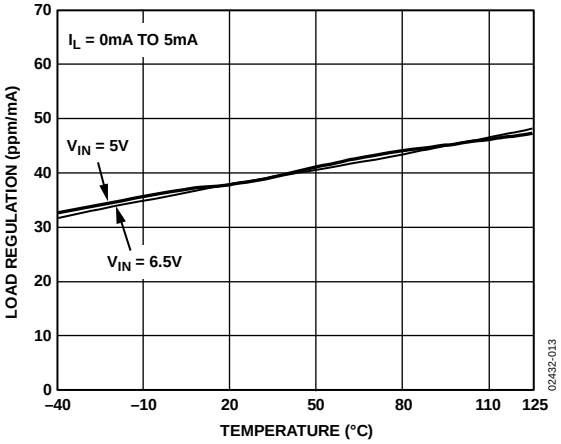

Figure 12. ADR421 Load Regulation vs. Temperature

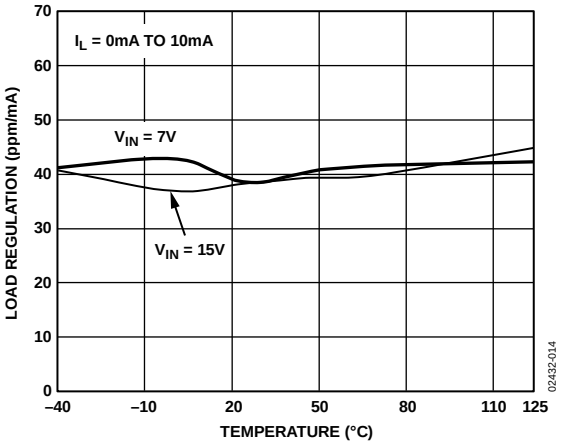

Figure 13. ADR423 Load Regulation vs. Temperature

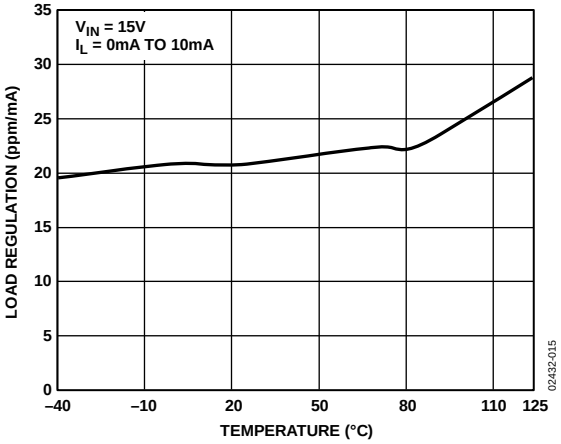

Figure 14. ADR425 Load Regulation vs. Temperature

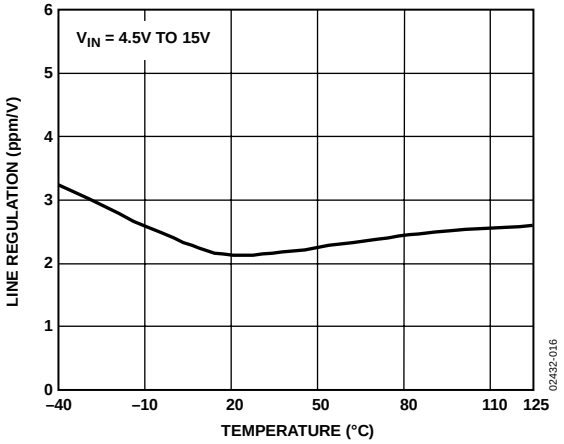

Figure 15. ADR420 Line Regulation vs. Temperature

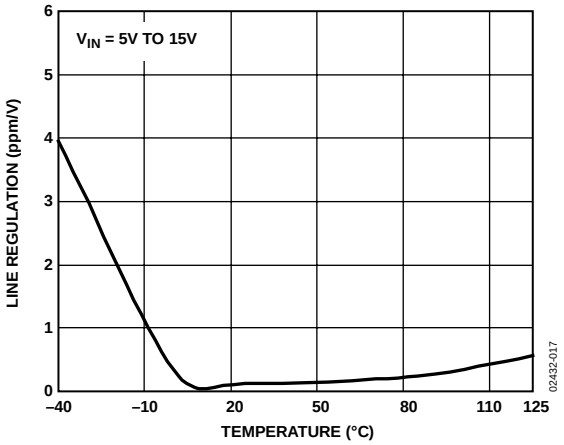

Figure 16. ADR421 Line Regulation vs. Temperature

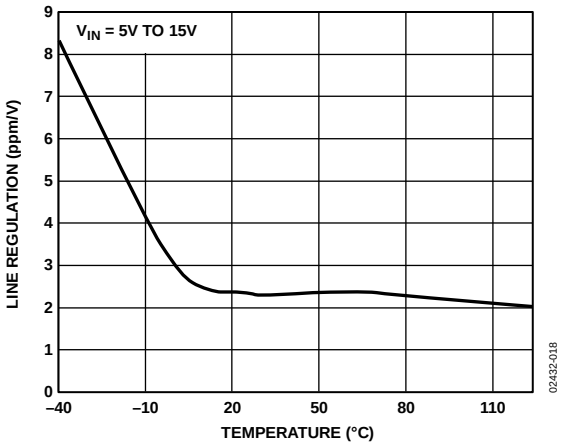

Figure 17. ADR423 Line Regulation vs. Temperature

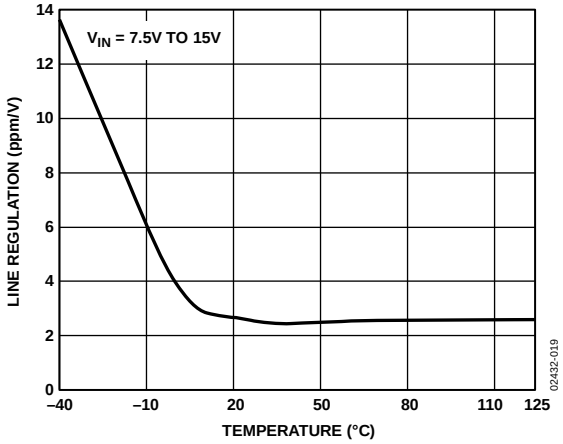

Figure 18. ADR425 Line Regulation vs. Temperature

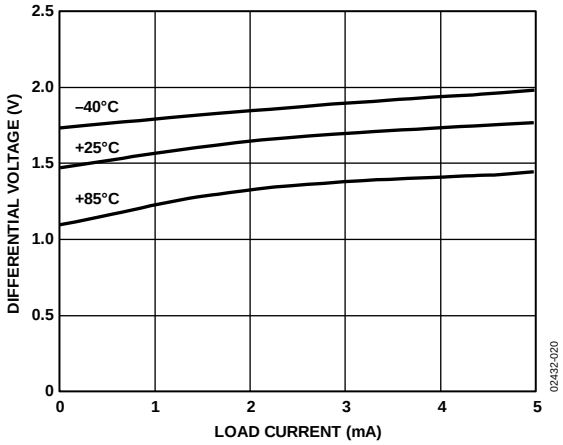

Figure 19. ADR420 Minimum Input/Output Voltage Differential vs. Load Current

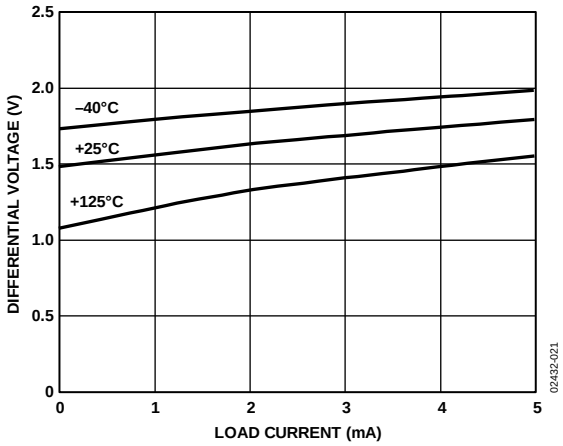

Figure 20. ADR421 Minimum Input/Output Voltage Differential vs. Load Current

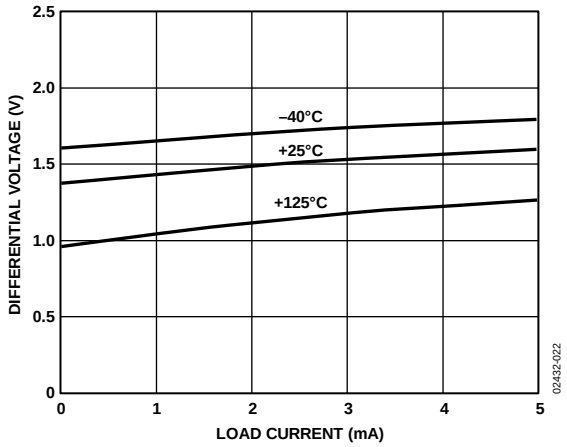

Figure 21. ADR423 Minimum Input/Output Voltage Differential vs. Load Current

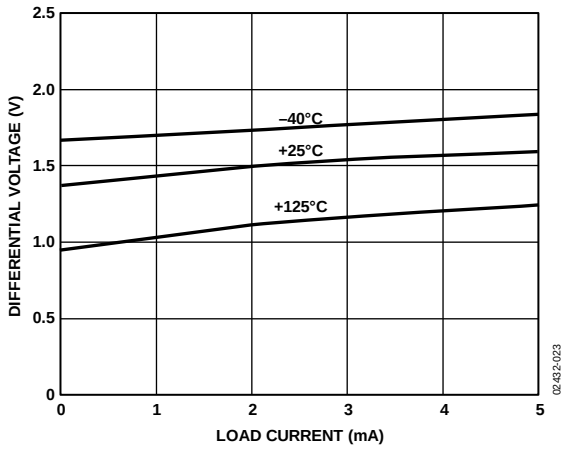

Figure 22. ADR425 Minimum Input/Output Voltage Differential vs. Load Current

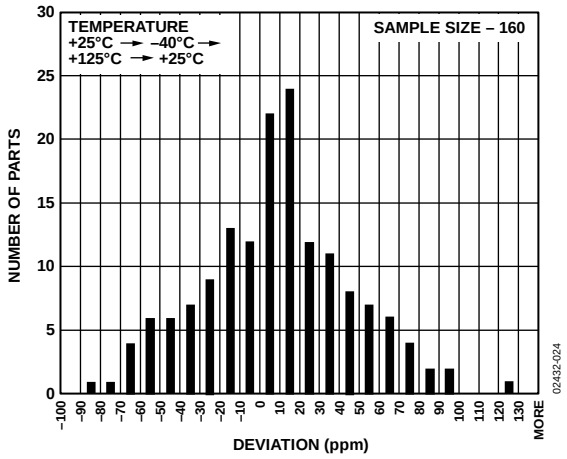

Figure 23. ADR421 Typical Hysteresis

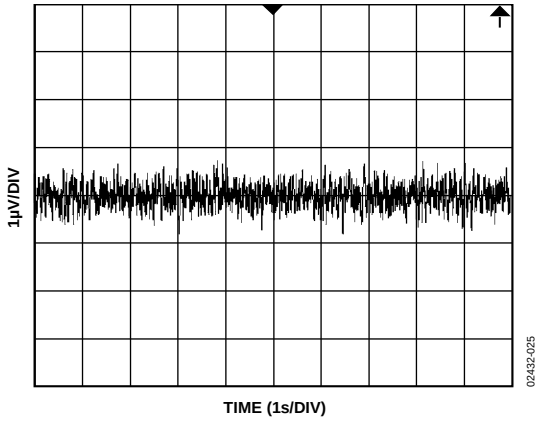

Figure 24. ADR421 Typical Noise Voltage 0.1 Hz to 10 Hz

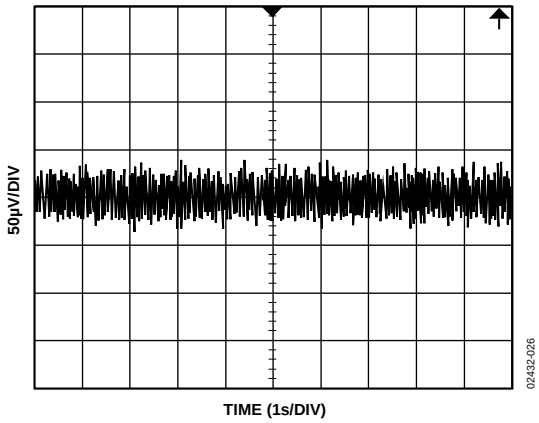

Figure 25. Typical Noise Voltage 10 Hz to 10 kHz

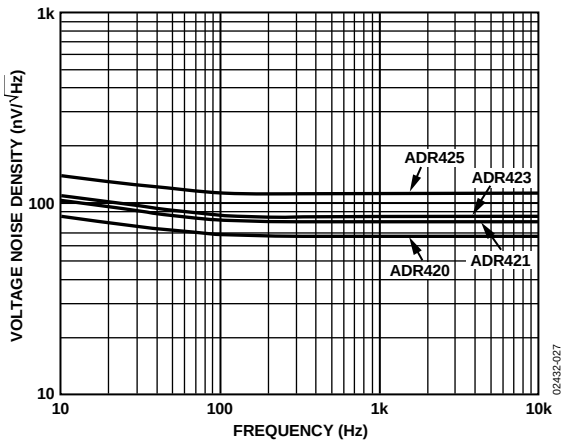

Figure 26. Voltage Noise Density vs. Frequency

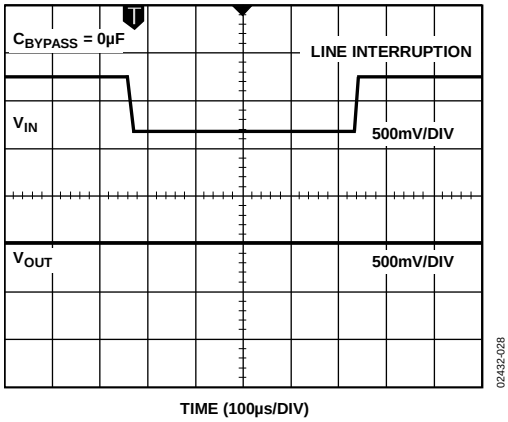

Figure 27. ADR421 Line Transient Response, no C_{BYPASS}

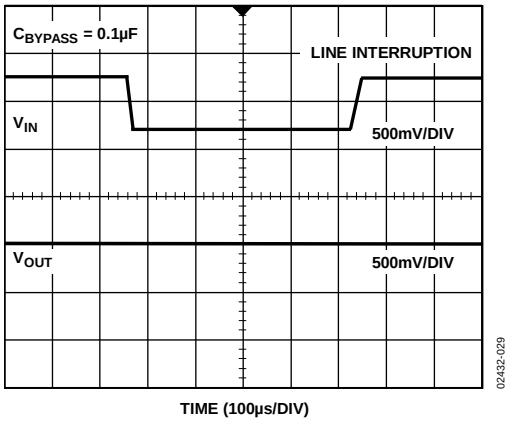

Figure 28. ADR421 Line Transient Response, C_{BYPASS} = 0.1 µF

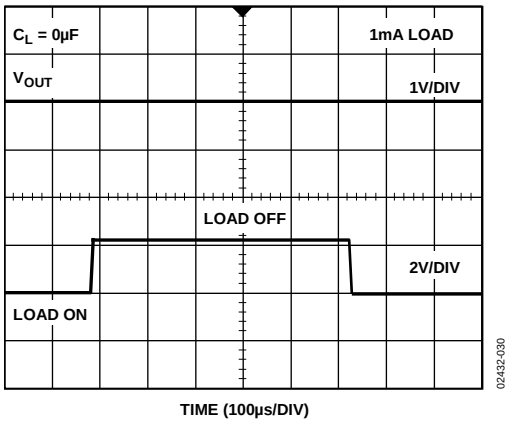

Figure 29. ADR421 Load Transient Response, no C_L

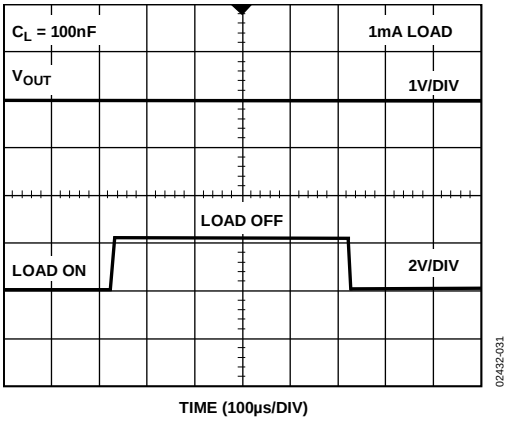

Figure 30. ADR421 Load Transient Response, C_L = 100 nF

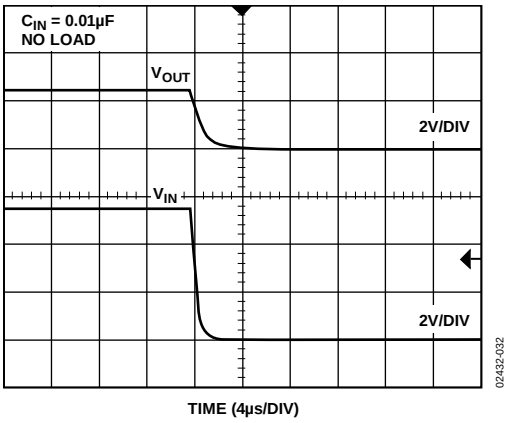

Figure 31. ADR421 Turn-Off Response

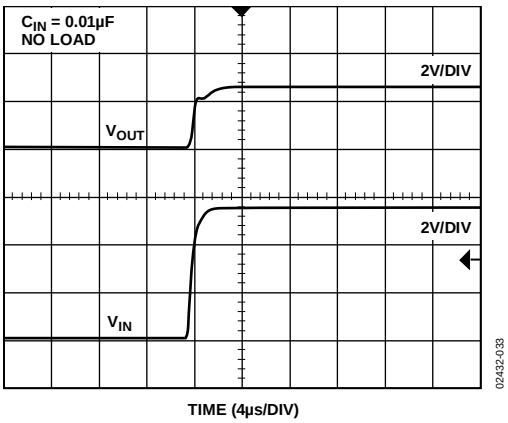

Figure 32. ADR421 Turn-On Response

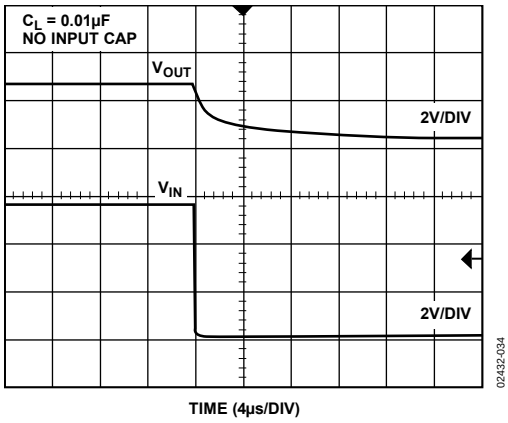

Figure 33. ADR421 Turn-Off Response

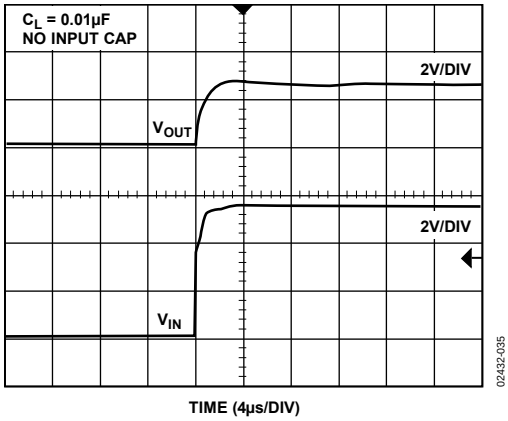

Figure 34. ADR421 Turn-On Response

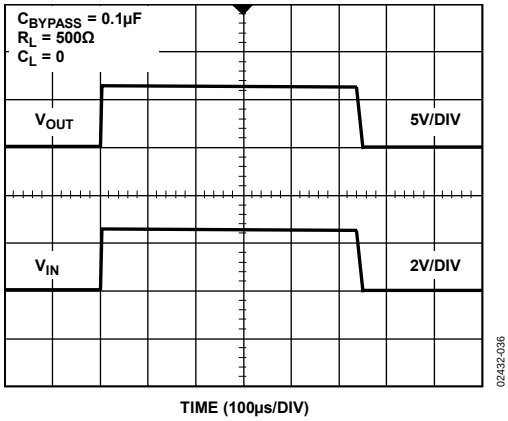

Figure 35. ADR421 Turn-On/Turn-Off Response

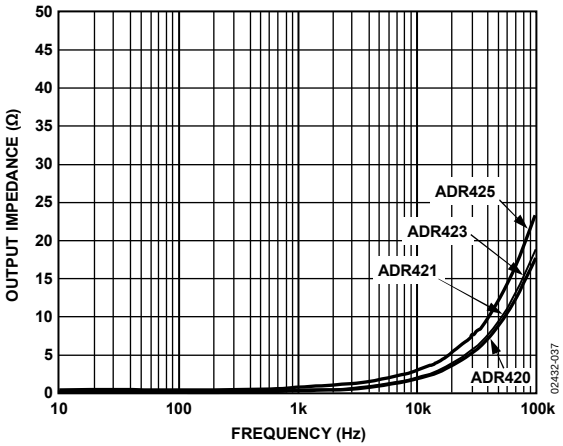

Figure 36. Output Impedance vs. Frequency

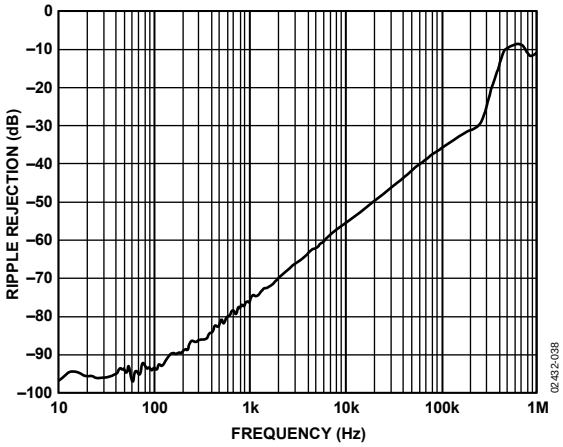

Figure 37. Ripple Rejection vs. Frequency

TERMINOLOGY

Temperature Coefficient

The change of output voltage over the operating temperature range is normalized by the output voltage at 25°C, and expressed in ppm/°C as

$$TCV_{OUT}(ppm/°C) = \frac{V_{OUT}(T_2) - V_{OUT}(T_1)}{V_{OUT}(25°C) \times (T_2 - T_1)} \times 10^6$$

where:

V_{OUT} (25°C) = V_{OUT} at 25°C.

V_{OUT} (T_1) = V_{OUT} at Temperature 1.

V_{OUT} (T_2) = V_{OUT} at Temperature 2.

Line Regulation

The change in output voltage due to a specified change in input voltage. It includes the effects of self-heating. Line regulation is expressed in either percent per volt, parts per million per volt, or microvolts per volt change in input voltage.

Load Regulation

The change in output voltage due to a specified change in load current. It includes the effects of self-heating. Load regulation is expressed in either microvolts per milliampere, parts per million per milliampere, or ohms of dc output resistance.

Long-Term Stability

Typical shift of output voltage at 25°C on a sample of parts subjected to operation life test of 1000 hours at 125°C.

$$\Delta V_{OUT} = V_{OUT}(t_0) - V_{OUT}(t_1)$$

$$\Delta V_{OUT}(ppm) = \frac{V_{OUT}(t_0) - V_{OUT}(t_1)}{V_{OUT}(t_0)} \times 10^6$$

where:

V_{OUT} (t_0) = V_{OUT} at 25°C at Time 0.

V_{OUT} (t_1) = V_{OUT} at 25°C after 1000 hours operation at 125°C.

Thermal Hysteresis

The change of output voltage after the device is cycled through temperatures from +25°C to −40°C to +125°C and back to +25°C. This is a typical value from a sample of parts put through such a cycle.

$$V_{OUT_HYS} = V_{OUT}(25°C) - V_{OUT_TC}$$

$$V_{OUT_HYS}(ppm) = \frac{V_{OUT}(25°C) - V_{OUT_TC}}{V_{OUT}(25°C)} \times 10^6$$

where:

V_{OUT} (25°C) = V_{OUT} at 25°C.

V_{OUT_TC} = V_{OUT} at 25°C after temperature cycle at +25°C to −40°C to +125°C and back to +25°C.

Input Capacitor

Input capacitors are not required on the ADR42x. There is no limit for the value of the capacitor used on the input, but a 1 µF to 10 µF capacitor on the input improves transient response in applications where the supply suddenly changes. An additional 0.1 µF capacitor in parallel also helps to reduce noise from the supply.

Output Capacitor

The ADR42x do not need output capacitors for stability under any load condition. An output capacitor, typically 0.1 µF, filters out any low level noise voltage and does not affect the operation of the part. On the other hand, the load transient response can be improved with an additional 1 µF to 10 µF output capacitor in parallel. A capacitor here acts as a source of stored energy for sudden increase in load current. The only parameter that degrades by adding an output capacitor is the turn-on time, which depends on the size of the selected capacitor.

THEORY OF OPERATION

The ADR42x series of references uses a reference generation technique known as XFET (eXtra implanted junction FET). This technique yields a reference with low supply current, good thermal hysteresis, and exceptionally low noise. The core of the XFET reference consists of two junction field-effect transistors (JFET), one having an extra channel implant to raise its pinch-off voltage. By running the two JFETs at the same drain current, the difference in pinch-off voltage can be amplified and used to form a highly stable voltage reference.

The intrinsic reference voltage is about 0.5 V with a negative temperature coefficient of about −120 ppm/°C. This slope is essentially constant to the dielectric constant of silicon and can be closely compensated by adding a correction term generated in the same fashion as the proportional-to-temperature (PTAT) term used to compensate band gap references. The primary advantage over a band gap reference is that the intrinsic temperature coefficient is approximately 30 times lower (therefore requiring less correction). This results in much lower noise because most of the noise of a band gap reference comes from the temperature compensation circuitry.

Figure 38 shows the basic topology of the ADR42x series. The temperature correction term is provided by a current source with a value designed to be proportional to absolute temperature. The general equation is

$$V_{OUT} = G \times (\Delta V_P - R1 \times I_{PTAT}) \quad (1)$$

where:
G is the gain of the reciprocal of the divider ratio.
ΔV_P is the difference in pinch-off voltage between the two JFETs.
I_{PTAT} is the positive temperature coefficient correction current.

Each ADR42x device is created by on-chip adjustment of R2 and R3 to achieve the specified reference output.

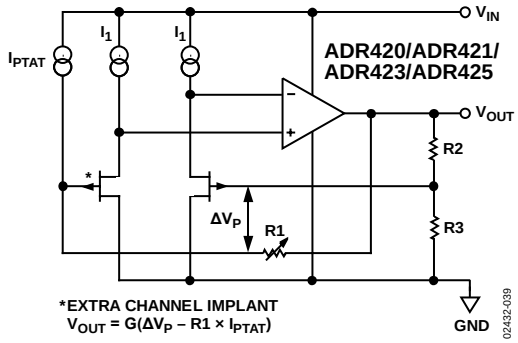

Figure 38. Simplified Schematic

DEVICE POWER DISSIPATION CONSIDERATIONS

The ADR42x family of references is guaranteed to deliver load currents to 10 mA with an input voltage that ranges from 4.5 V to 18 V. When these devices are used in applications at higher currents, the following equation should be used to account for the temperature effects due to power dissipation increases:

$$T_J = P_D \times \theta_{JA} + T_A \quad (2)$$

where:
T_J and T_A are the junction temperature and the ambient temperature, respectively.
P_D is the device power dissipation.
θ_{JA} is the device package thermal resistance.

BASIC VOLTAGE REFERENCE CONNECTIONS

Voltage references, in general, require a bypass capacitor connected from V_{OUT} to GND. The circuit in Figure 39 illustrates the basic configuration for the ADR42x family of references. Other than a 0.1 µF capacitor at the output to help improve noise suppression, a large output capacitor at the output is not required for circuit stability.

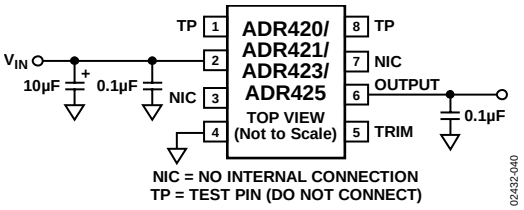

Figure 39. Basic Voltage Reference Configuration

NOISE PERFORMANCE

The noise generated by ADR42x references is typically less than 2 µV p-p over the 0.1 Hz to 10 Hz band for the ADR420, ADR421, and ADR423. Figure 24 shows the 0.1 Hz to 10 Hz noise of the ADR421, which is only 1.75 µV p-p. The noise measurement is made with a band-pass filter made of a 2-pole high-pass filter with a corner frequency at 0.1 Hz and a 2-pole low-pass filter with a corner frequency at 10 Hz.

TURN-ON TIME

At power-up (cold start), the time required for the output voltage to reach its final value within a specified error band is defined as the turn-on settling time. Two components typically associated with this are the time for the active circuits to settle and the time for the thermal gradients on the chip to stabilize. Figure 31 to Figure 35 show the turn-on settling time for the ADR421.

APPLICATIONS

OUTPUT ADJUSTMENT

The ADR42x trim terminal can be used to adjust the output voltage over a ±0.5% range. This feature allows the system designer to trim system errors out by setting the reference to a voltage other than the nominal. This is also helpful if the part is used in a system at temperature to trim out any error. Adjustment of the output has a negligible effect on the temperature performance of the device. To avoid degrading temperature coefficients, both the trimming potentiometer and the two resistors need to be low temperature coefficient types, preferably <100 ppm/°C.

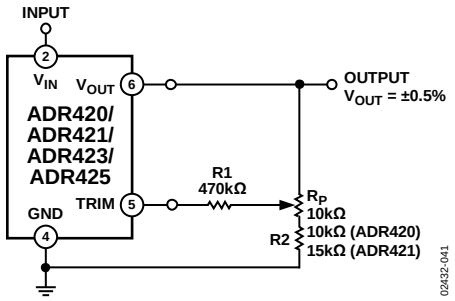

Figure 40. Output Trim Adjustment

REFERENCE FOR CONVERTERS IN OPTICAL NETWORK CONTROL CIRCUITS

In the high capacity, all optical router network of Figure 41, arrays of micromirrors direct and route optical signals from fiber to fiber, without first converting them to electrical form, which reduces the communication speed. The tiny micro-mechanical mirrors are positioned so that each is illuminated by a single wavelength that carries unique information and can be passed to any desired input and output fiber. The mirrors are tilted by the dual-axis actuators controlled by precision analog-to-digital converters (ADCs) and digital-to-analog converters (DACs) within the system. Due to the microscopic movement of the mirrors, not only is the precision of the converters important, but the noise associated with these controlling converters is extremely critical, because total noise within the system can be multiplied by the numbers of converters used. Consequently, the exceptional low noise of the ADR42x is necessary to maintain the stability of the control loop for this application.

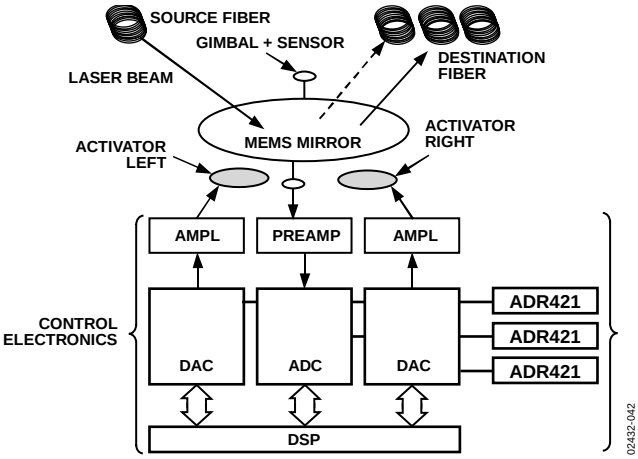

Figure 41. All Optical Router Network

HIGH VOLTAGE FLOATING CURRENT SOURCE

The circuit in Figure 42 can be used to generate a floating current source with minimal self-heating. This particular configuration can operate on high supply voltages determined by the breakdown voltage of the N-channel JFET.

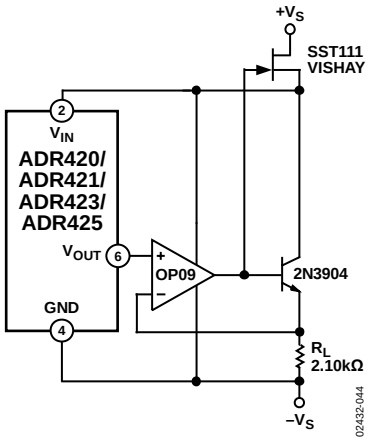

Figure 42. High Voltage Floating Current Source

KELVIN CONNECTIONS

In many portable instrumentation applications where PC board cost and area are important considerations, circuit interconnects are often narrow. These narrow lines can cause large voltage drops if the voltage reference is required to provide load currents to various functions. In fact, a circuit's interconnects can exhibit a typical line resistance of 0.45 mΩ/square (1 oz. Cu, for example). Force and sense connections, also referred to as Kelvin connections, offer a convenient method of eliminating the effects of voltage drops in circuit wires. Load currents flowing through wiring resistance produce an error ($V_{ERROR} = R \times I_L$) at the load. However, the Kelvin connection in Figure 43 overcomes the problem by including the wiring resistance within the forcing loop of the op amp. Because the op amp senses the load voltage, op amp loop control forces the output to compensate for the wiring error and to produce the correct voltage at the load.

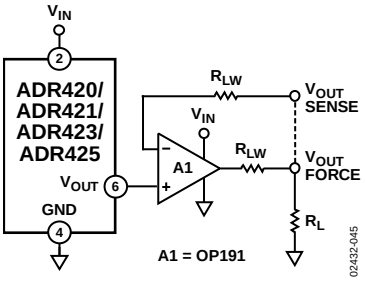

Figure 43. Advantage of Kelvin Connection

DUAL-POLARITY REFERENCES

Dual-polarity references can easily be made with an op amp and a pair of resistors. In order not to defeat the accuracy obtained by the ADR42x, it is imperative to match the resistance tolerance and the temperature coefficient of all components.

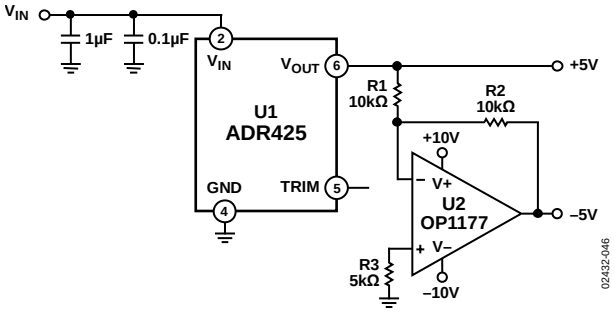

Figure 44. +5 V and –5 V Reference Using ADR425

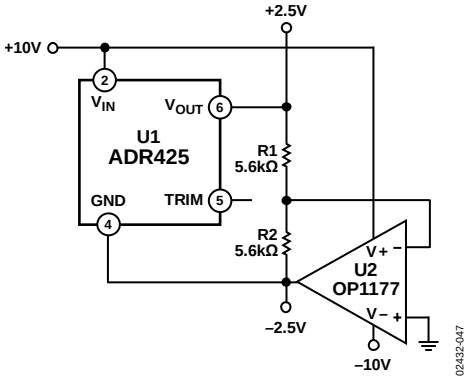

Figure 45. +2.5 V and –2.5 V Reference Using ADR425

PROGRAMMABLE CURRENT SOURCE

Together with a digital potentiometer and a Howland current pump, the ADR425 forms the reference source for a programmable current as

$$I_L = \frac{\left(\frac{R2_A + R2_B}{R1}\right)}{R2_B} \times V_W \quad (3)$$

and

$$VW = \frac{D}{2^N} \times V_{REF} \quad (4)$$

where:
D is the decimal equivalent of the input code.
N is the number of bits.

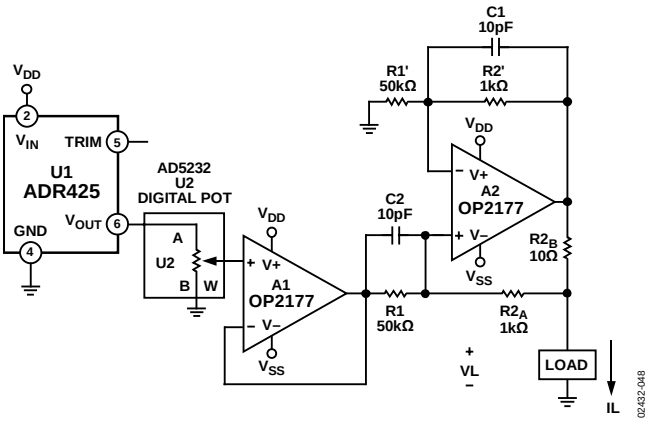

Figure 46. Programmable Current Source

R1' and R2' must be equal to R1 and $R2_A + R2_B$, respectively. Theoretically, $R2_B$ can be made as small as needed to achieve the current needed within A2 output current driving capability. In the example shown in Figure 46, OP2177 is able to deliver a maximum of 10 mA. Because the current pump uses both positive and negative feedback, capacitors C1 and C2 are needed to ensure that negative feedback prevails and, therefore, avoiding oscillation. This circuit also allows bidirectional current flow if the inputs V_A and V_B of the digital potentiometer are supplied with the dual-polarity references as previously shown.

PROGRAMMABLE DAC REFERENCE VOLTAGE

With a multichannel DAC, such as the quad, 12-bit voltage output AD7398, one of its internal DACs, and an ADR42x voltage reference can be used as a common programmable $V_{REF}x$ for the rest of the DACs. The circuit configuration is shown in Figure 47. The relationship of $V_{REF}x$ to V_{REF} depends on the digital code and the ratio of R1 and R, and is given by

$$V_{REF}x = \frac{V_{REF} \times \left(1 + \frac{R2}{R1}\right)}{\left(1 + \frac{D}{2^N} \times \frac{R2}{R1}\right)} \quad (5)$$

where:
D is the decimal equivalent of input code.
N is the number of bits.
V_{REF} is the applied external reference.
$V_{REF}x$ is the reference voltage for DACs A to D.

Table 9. $V_{REF}x$ vs. R1 and R2

R1, R2	Digital Code	V_{REF}
R1 = R2	0000 0000 0000	2 V_{REF}
R1 = R2	1000 0000 0000	1.3 V_{REF}
R1 = R2	1111 1111 1111	V_{REF}
R1 = 3R2	0000 0000 0000	4 V_{REF}
R1 = 3R2	1000 0000 0000	1.6 V_{REF}
R1 = 3R2	1111 1111 1111	V_{REF}

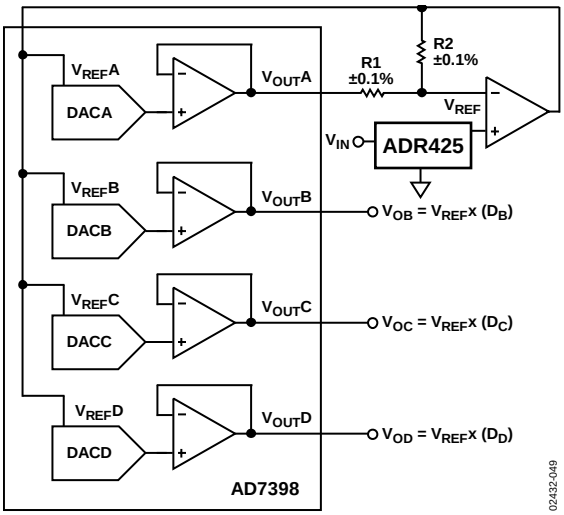

Figure 47. Programmable DAC Reference

PRECISION VOLTAGE REFERENCE FOR DATA CONVERTERS

The ADR42x family has a number of features that make it ideal for use with ADCs and DACs. The exceptionally low noise, tight temperature coefficient, and high accuracy characteristics make the ADR42x ideal for low noise applications such as cellular base station applications.

AD7701 is an example of an ADC that is well suited for the ADR42x. The ADR421 is used as the precision reference for the converter in Figure 48. The AD7701 is a 16-bit ADC with on-chip digital filtering intended for measuring wide dynamic range and low frequency signals, such as those representing chemical, physical, or biological processes. It contains a charge-balancing (Σ-Δ) ADC, calibration microcontroller with on-chip static RAM, clock oscillator, and serial communications port.

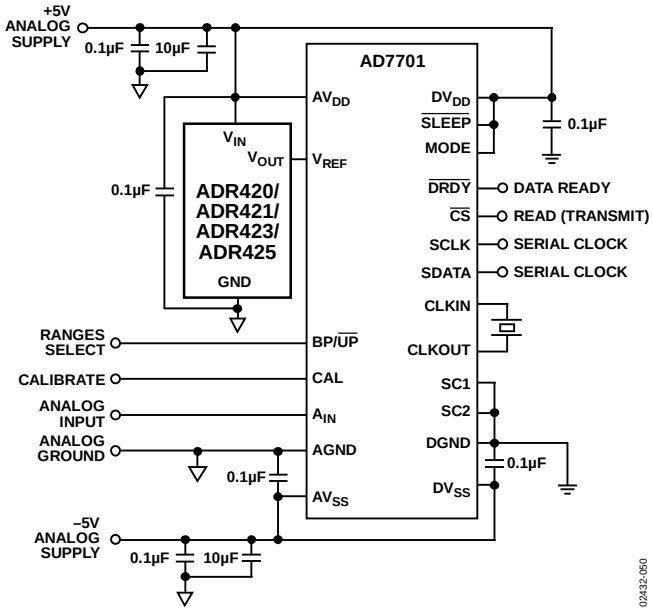

Figure 48. Voltage Reference for 16-Bit ADC AD7701

PRECISION BOOSTED OUTPUT REGULATOR

A precision voltage output with boosted current capability can be realized with the circuit shown in Figure 49. In this circuit, U2 forces V_{OUT} to be equal to V_{REF} by regulating the turn on of N1. Therefore, the load current is furnished by V_{IN}. In this configuration, a 50 mA load is achievable at V_{IN} of 5 V. Moderate heat is generated on the MOSFET, and higher current can be achieved by replacing the larger device. In addition, for a heavy capacitive load with step input, a buffer may be added at the output to enhance the transient response.

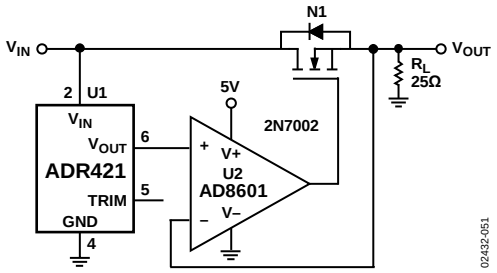

Figure 49. Precision Boosted Output Regulator

OUTLINE DIMENSIONS

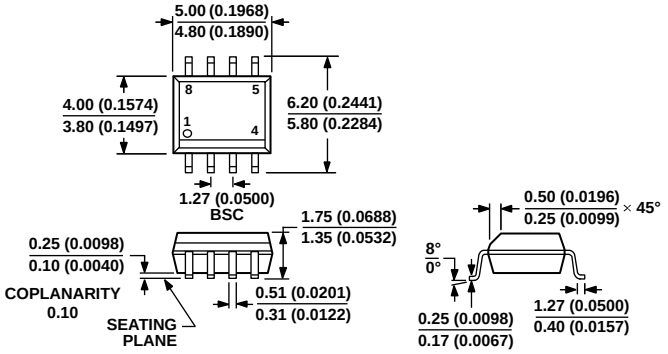

COMPLIANT TO JEDEC STANDARDS MS-012-AA
CONTROLLING DIMENSIONS ARE IN MILLIMETERS; INCH DIMENSIONS (IN PARENTHESES) ARE ROUNDED-OFF MILLIMETER EQUIVALENTS FOR REFERENCE ONLY AND ARE NOT APPROPRIATE FOR USE IN DESIGN.

012407-A

Figure 50. 8-Lead Standard Small Outline Package [SOIC_N]
Narrow Body
(R-8)
Dimensions shown in millimeters and (inches)

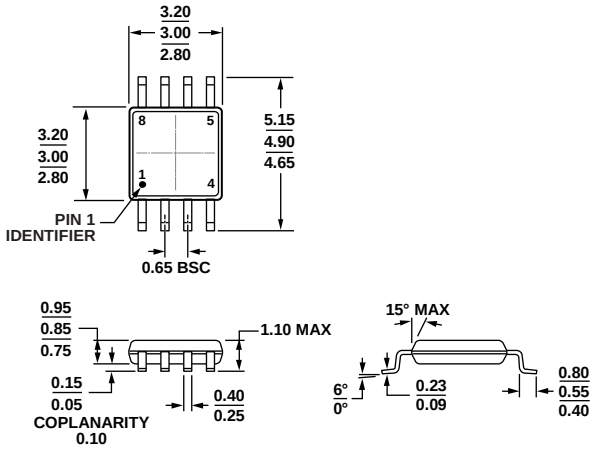

COMPLIANT TO JEDEC STANDARDS MO-187-AA

10-07-2009-B

Figure 51. 8-Lead Mini Small Outline Package [MSOP]
(RM-8)
Dimensions shown in millimeters

ORDERING GUIDE

Model[1]	Output Voltage, V_{OUT} (V)	Initial Accuracy		Temperature Coefficient (ppm/°C)	Temperature Range	Package Description	Package Option	Branding
		mV	%					
ADR420ARZ	2.048	3	0.15	10	−40°C to +125°C	8-Lead SOIC_N	R-8	
ADR420ARZ-REEL7	2.048	3	0.15	10	−40°C to +125°C	8-Lead SOIC_N	R-8	
ADR420ARMZ	2.048	3	0.15	10	−40°C to +125°C	8-Lead MSOP	RM-8	L0C
ADR420ARMZ-REEL7	2.048	3	0.15	10	−40°C to +125°C	8-Lead MSOP	RM-8	L0C
ADR420BRZ	2.048	1	0.05	3	−40°C to +125°C	8-Lead SOIC_N	R-8	
ADR420BRZ-REEL7	2.048	1	0.05	3	−40°C to +125°C	8-Lead SOIC_N	R-8	
ADR421ARZ	2.50	3	0.12	10	−40°C to +125°C	8-Lead SOIC_N	R-8	
ADR421ARZ-REEL7	2.50	3	0.12	10	−40°C to +125°C	8-Lead SOIC_N	R-8	
ADR421ARMZ	2.50	3	0.12	10	−40°C to +125°C	8-Lead MSOP	RM-8	R06
ADR421ARMZ-REEL7	2.50	3	0.12	10	−40°C to +125°C	8-Lead MSOP	RM-8	R06
ADR421BR	2.50	1	0.04	3	−40°C to +125°C	8-Lead SOIC_N	R-8	
ADR421BR-REEL7	2.50	1	0.04	3	−40°C to +125°C	8-Lead SOIC_N	R-8	
ADR421BRZ	2.50	1	0.04	3	−40°C to +125°C	8-Lead SOIC_N	R-8	
ADR421BRZ-REEL7	2.50	1	0.04	3	−40°C to +125°C	8-Lead SOIC_N	R-8	
ADR423ARZ	3.00	4	0.13	10	−40°C to +125°C	8-Lead SOIC_N	R-8	
ADR423ARZ-REEL7	3.00	4	0.13	10	−40°C to +125°C	8-Lead SOIC_N	R-8	
ADR423ARMZ	3.00	4	0.13	10	−40°C to +125°C	8-Lead MSOP	RM-8	R0U
ADR423ARMZ-REEL7	3.00	4	0.13	10	−40°C to +125°C	8-Lead MSOP	RM-8	R0U
ADR423BRZ	3.00	1.5	0.04	3	−40°C to +125°C	8-Lead SOIC_N	R-8	
ADR423BRZ-REEL7	3.00	1.5	0.04	3	−40°C to +125°C	8-Lead SOIC_N	R-8	
ADR425ARZ	5.00	6	0.12	10	−40°C to +125°C	8-Lead SOIC_N	R-8	
ADR425ARZ-REEL7	5.00	6	0.12	10	−40°C to +125°C	8-Lead SOIC_N	R-8	
ADR425ARMZ	5.00	6	0.12	10	−40°C to +125°C	8-Lead MSOP	RM-8	R7A#
ADR425ARMZ-REEL7	5.00	6	0.12	10	−40°C to +125°C	8-Lead MSOP	RM-8	R7A#
ADR425BRZ	5.00	2	0.04	3	−40°C to +125°C	8-Lead SOIC_N	R-8	
ADR425BRZ-REEL7	5.00	2	0.04	3	−40°C to +125°C	8-Lead SOIC_N	R-8	

[1] Z = RoHS Compliant Part. # denotes RoHS-compliant product may be top or bottom marked.

NOTES

©2001–2013 Analog Devices, Inc. All rights reserved. Trademarks and registered trademarks are the property of their respective owners.
D02432-0-12/13(J)

Looking for pricing, stock, or lifecycle information?

Click below to explore more details on WIN SOURCE:

- View ADR423BRZ on WIN SOURCE
- Analog Devices Inc. Information

Optimize Your Supply Chain with WIN SOURCE Solutions

- Global Sourcing Solution
- Obsolete Management
- Cost Control Management
- Shortage Management
- Alternative Solution
- Excess Inventory Management